Form No. 3388-641 Rev B

TORO®

Count on it.

# Parts Catalog

# 22in Recycler®

## Lawn Mower

**Model No. 20337—Serial No. 315000001 and Up**

Register at www.Toro.com.
Original Instructions (EN)

*3388-641* B

# Ordering Replacement Parts

To order replacement parts, please supply the part number, the quantity, and the description of each part desired.

**Understanding Reference Numbers**

Each identified part in an illustration has a reference number. The reference number for a part also appears in the parts list, along with other information about the part.

This catalog uses two special reference number formats, one to indicate parts in a service assembly and another to indicate the quantity of a given part in an illustration.

**Service Assembly Reference Numbers**

Parts in service assemblies have reference numbers in the form a:b. The a represents the reference number of the entire service assembly and the b represents a sequential number unique to each part within the service assembly.

For example, a wheel assembly might be identified by reference number 6, the tire by 6:1, the valve by 6:2, and the wheel by 6:3. When you order the assembly identified by reference number 6, you receive all parts identified by reference numbers 6:1,6:2, and 6:3. However, you may also order any part individually. Reference numbers of this type appear in illustration and in parts lists.

**Reference Numbers Indicating Quantity**

In an illustration, if a reference number indicates more than one part, the reference number has the form nX y. The n represents the quantity of the part, the X is the multiplication symbol, and the y represents the reference number.

For example, in an illustration, the reference number 2X 37 means that two of the parts identified by reference number 37 are indicated.

# Contents

Deck, Side Chute and Rear Door Assembly . . . . . 4
Rear Bag Assembly . . . . . 6
Engine and Blade Assembly . . . . . 8
Front Wheel and Height-of-Cut Assembly . . . . . 10
Transmission and Rear Wheel Drive Assembly . . . . . 12
Handle Assembly . . . . . 14
Attachments and Accessories . . . . . 16

**© 2017—The Toro® Company**
**8111 Lyndale Avenue South**
**Bloomington, MN 55420**



**Contact us at www.Toro.com.**
**Printed in the USA.**
**All Rights Reserved**

# Deck, Side Chute and Rear Door Assembly

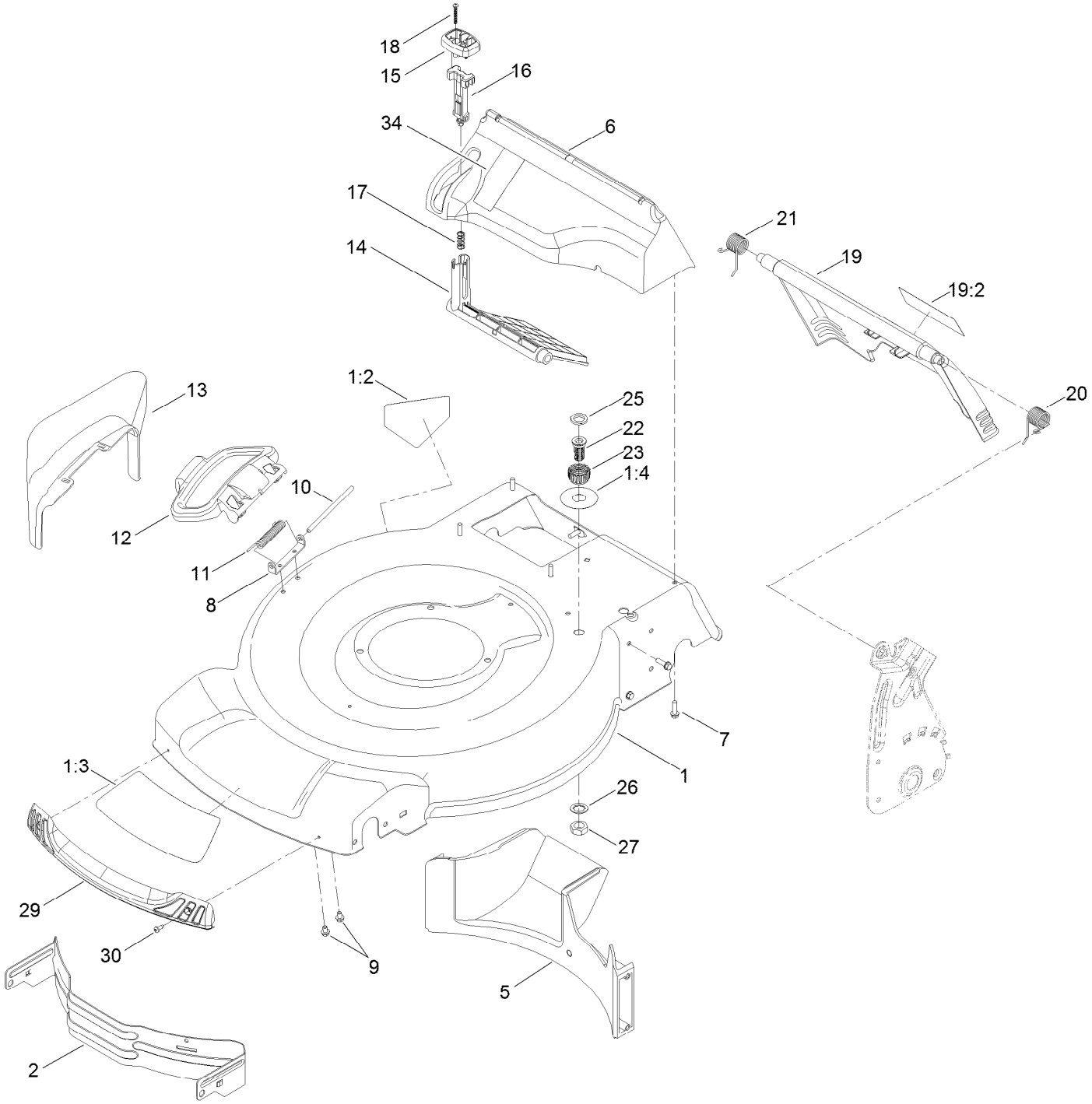

# Deck, Side Chute and Rear Door Assembly (continued)

| Ref. | Part Number | Qty. | Description |
|---|---|---|---|
| 1 | 130-2389 | 1 | Housing ASM |
| 1:2 | 94-8072 | 1 | Decal-Danger |
| 1:3 | 115-4676 | 1 | Decal-Recycler |
| 1:4 | 112-8867 | 1 | Decal-Port, Washout |
| 2 | 114-7963-01 | 1 | Baffle-Front |
| 5 | 114-7961 | 1 | Baffle-Rear |
| 6 | 115-4677 | 1 | Chute-Recycle |
| 7 | 46-8091 | 9 | Screw-HWH |
| 8 | 112-6416 | 1 | Bracket-Cover |
| 9 | 99-8445 | 2 | Screw-HWH |
| 10 | 99-5291 | 1 | Rod-Cover |
| 11 | 99-5293 | 1 | Spring-Torsion |
| 12 | 115-8449 | 1 | Deflector-Side |
| 13 | 115-8447 | 1 | Chute-Discharge, Side |
| 14 | 114-7960 | 1 | Deflector-Recycle |
| 15 | 114-7958 | 1 | Knob-Recycle |
| 16 | 114-7959 | 1 | Latch-Recycle |
| 17 | 117-1031 | 1 | Spring-Compression |
| 18 | 32104-120 | 2 | Screw-PPH |
| 19 | 121-5776 | 1 | Rear Door ASM |
| 19:2 | 131-4514 | 1 | Decal-Warning |
| 20 | 115-2859 | 1 | Spring-Torsion |
| 21 | 114-7924 | 1 | Spring-Torsion |
| 22 | 112-6400 | 1 | Port-Washout |
| 23 | 112-6401 | 1 | Coupling-Hose, Washout Port |
| 25 | 112-6438 | 1 | Washer-Seal, Washout Port |
| 26 | 3254-5 | 1 | Washer-Tooth, Internal |
| 27 | 3218-6 | 1 | Nut-Jam |
| 29 | 114-7987 | 1 | Bumper |
| 30 | 105-6849 | 2 | Screw-Forming, Thread |
| 34 | 125-5026 | 1 | Decal |

# Rear Bag Assembly

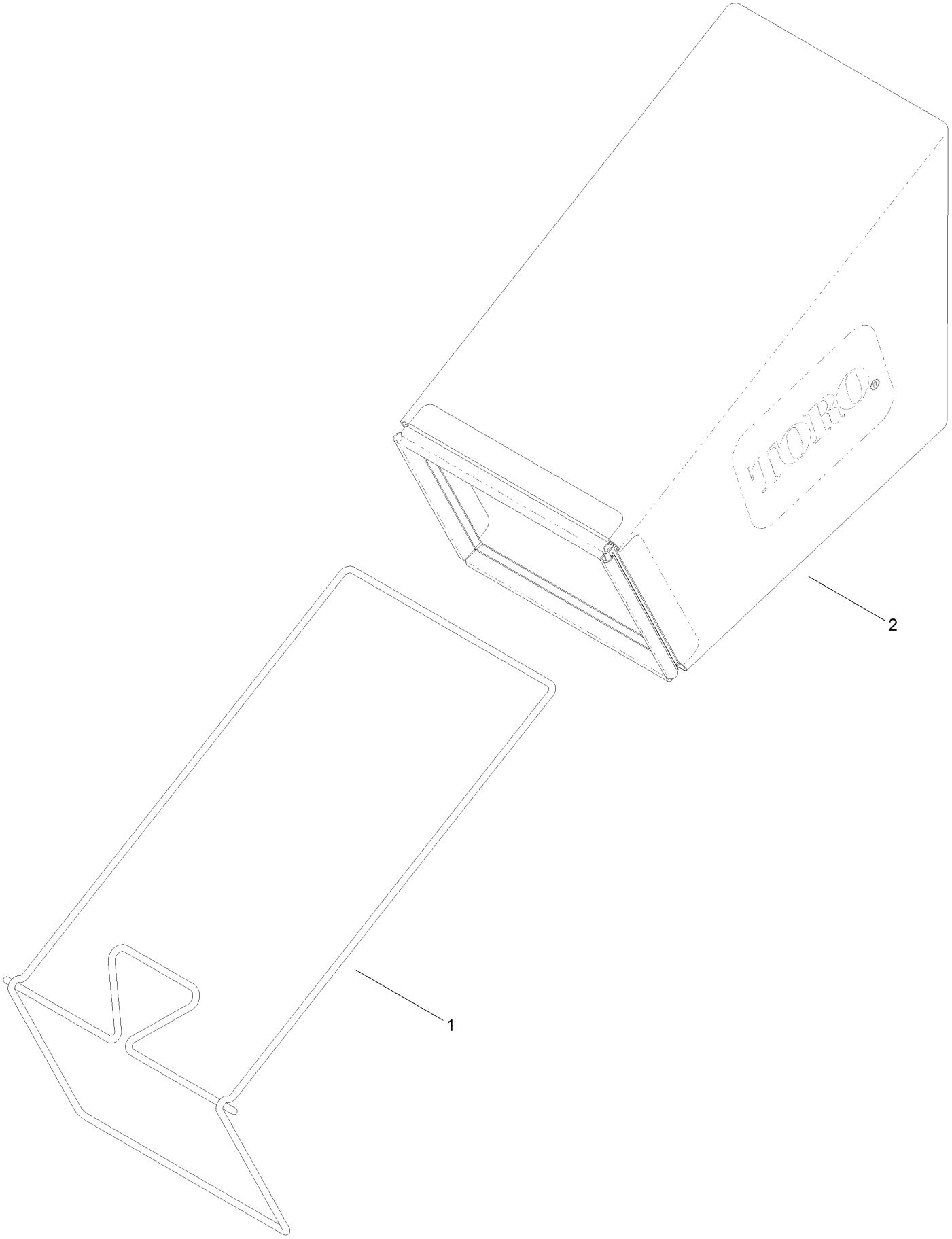

# Rear Bag Assembly (continued)

| *Ref.* | *Part Number* | *Qty.* | *Description* |
|---|---|---|---|
| 1 | 114-2679-03 | 1 | Frame-Bag |
| 2 | 115-4673 | 1 | Grass Bag ASM |

# Engine and Blade Assembly

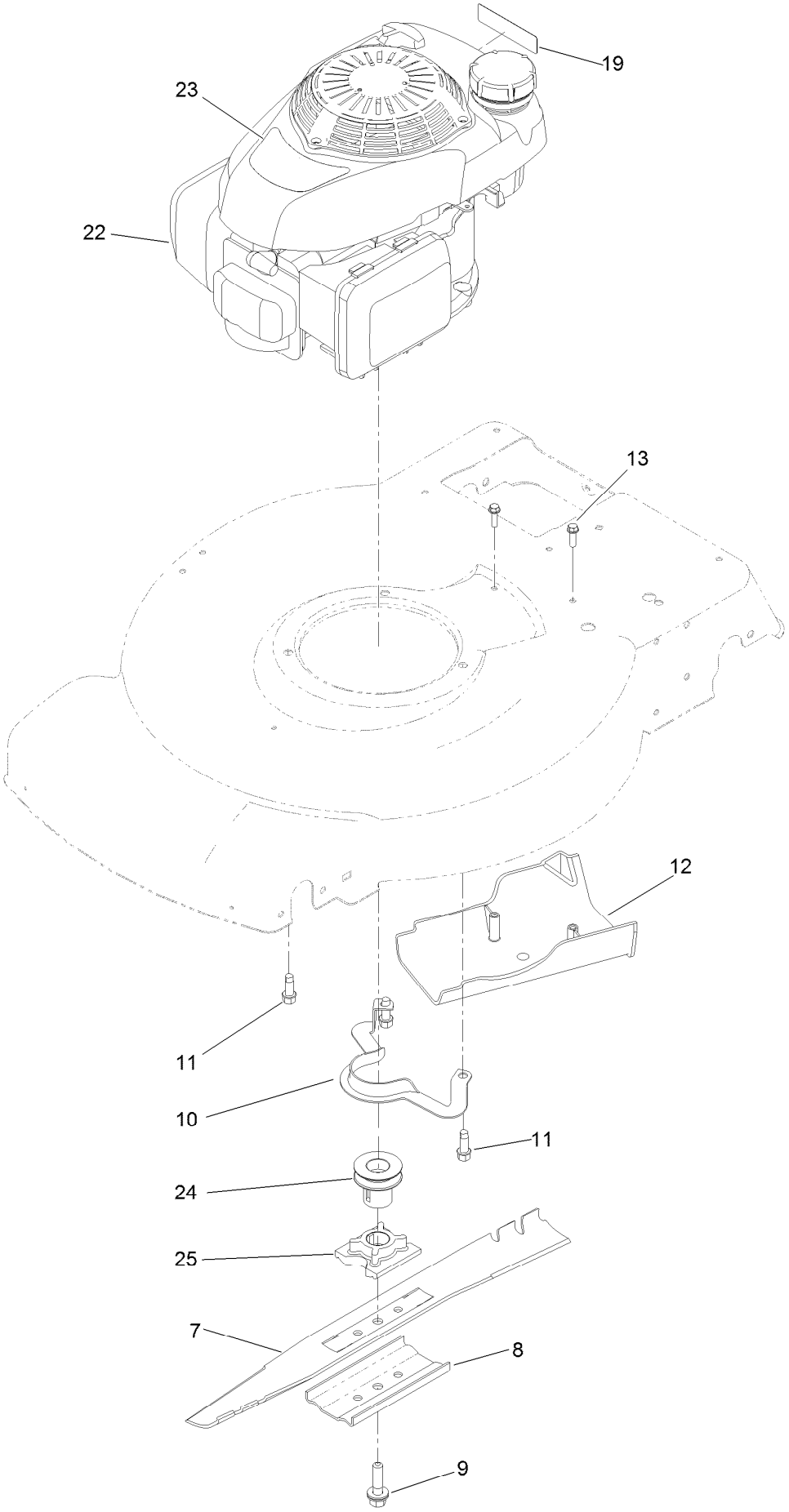

# Engine and Blade Assembly (continued)

| Ref. | Part Number | Qty. | Description |
|---|---|---|---|
| 7 | 108-9764-03 | 1 | Blade-22 Inch |
| 8 | 108-3766-03 | 1 | Support-Blade |
| 9 | 117-5270 | 1 | Bolt-Blade |
| 10 | 105-3030-03 | 1 | Guide-Belt |
| 11 | 95-1726 | 3 | Screw-Taptite |
| 12 | 114-7937 | 1 | Cover-Belt |
| 13 | 46-8091 | 2 | Screw-HWH |
| 19 | 117-2718 | 1 | Decal-Arrester, Spark |
| 22 | | 1 | Engine-Honda, Gcv160La0 S3B ●■ |
| 23 | 131-0854 | 1 | Decal-Shroud, Honda |
| 24 | 130-6684 | 1 | Pulley |
| 25 | 130-6674 | 1 | Retainer-Blade |

● Not serviced separately

■ Obtain parts from www.honda-engines.com

# Front Wheel and Height-of-Cut Assembly

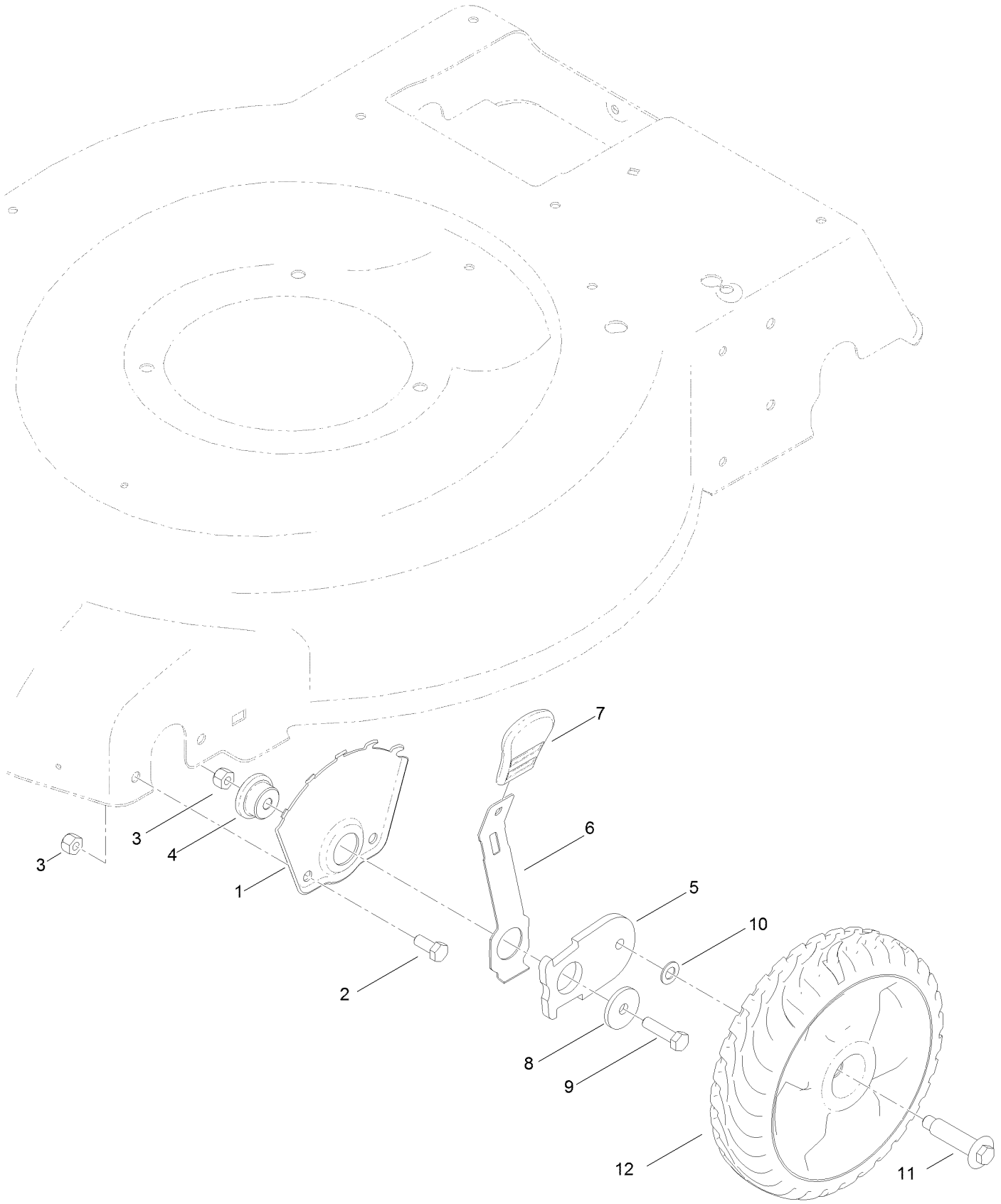

# Front Wheel and Height-of-Cut Assembly (continued)

| Ref. | Part Number | Qty. | Description |
|---|---|---|---|
| 1 | 115-1956-03 | 2 | Plate-HOC, Front |
| 2 | 322-3 | 4 | Screw-HH |
| 3 | 3296-29 | 6 | Nut-Lock, NI |
| 4 | 105-1818 | 2 | Bushing-Mount, HOC |
| 5 | 105-1807 | 2 | Arm-Pivot, Front |
| 6 | 105-1809 | 2 | Arm-Spring |
| 7 | 110-0549 | 2 | Knob-HOC |
| 8 | 105-3048 | 2 | Washer-Flat |
| 9 | 322-6 | 2 | Screw-HH |
| 10 | 40-1940 | 2 | Washer |
| 11 | 614650 | 2 | Bolt-Shoulder |
| 12 | 115-2894 | 2 | 8 Inch Wheel ASM |

# Transmission and Rear Wheel Drive Assembly

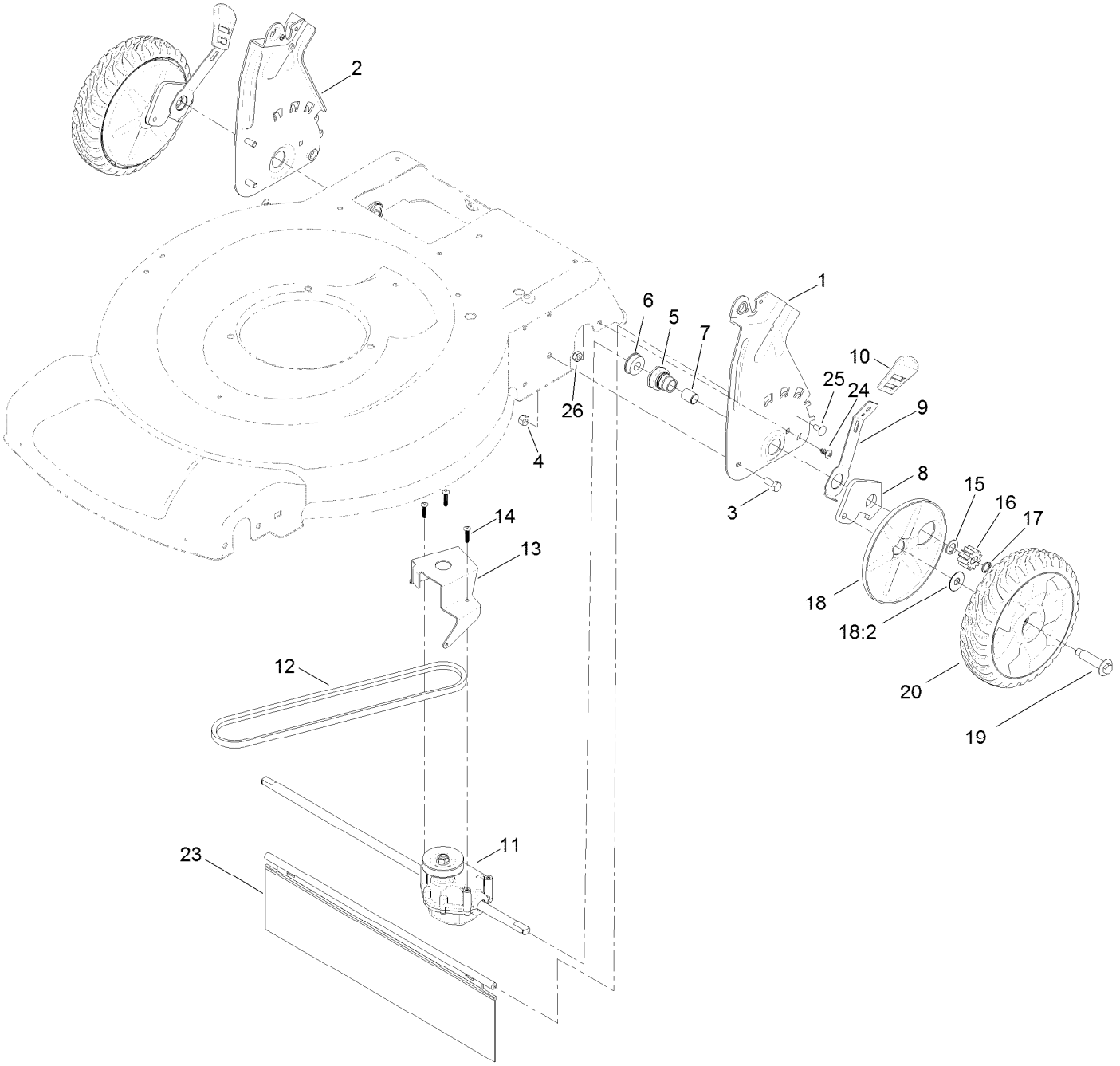

# Transmission and Rear Wheel Drive Assembly (continued)

| Ref. | Part Number | Qty. | Description |
|---|---|---|---|
| 1 | 127-6877-03 | 1 | Plate-Rear, LH (HOC) |
| 2 | 127-6878-03 | 1 | Plate-Rear, RH (HOC) |
| 3 | 322-3 | 4 | Screw-HH |
| 4 | 3296-29 | 4 | Nut-Lock, NI |
| 5 | 108-9779 | 2 | Retainer-Bushing, HOC |
| 6 | 104-8699 | 2 | Bearing-Ball |
| 7 | 108-9782 | 2 | Bushing-Sleeve |
| 8 | 108-9781 | 2 | Arm-Pivot, Rear |
| 9 | 108-9780 | 2 | Arm-Spring |
| 10 | 110-0549 | 2 | Knob-HOC |
| 11 | 121-9178 | 1 | Transmission ASM |
| 12 | 115-4669 | 1 | Belt-V |
| 13 | 114-7977-03 | 1 | Bracket-Transmission |
| 14 | 108-7476 | 3 | Screw-Plastite |
| 15 | 110-7191 | 2 | Washer-Thrust |
| 16 | 110-9417 | 2 | Gear-Pinion, 15T |
| 17 | 32151-61 | 2 | Ring-Retaining |
| 18 | 110-1792 | 2 | Wheel Cover ASM |
| 18:2 | 614426 | 1 | Washer-Stepped |
| 19 | 614650 | 2 | Bolt-Shoulder |
| 20 | 119-3822 | 2 | 8 Inch Wheel Gear ASM |
| 23 | 120-7012 | 1 | Shield-Trailing |
| 24 | 117-1092 | 2 | Screw-PTH |
| 25 | 3229-11 | 2 | Screw-CARR |
| 26 | 3296-16 | 2 | Nut-Lock, NI |

# Handle Assembly

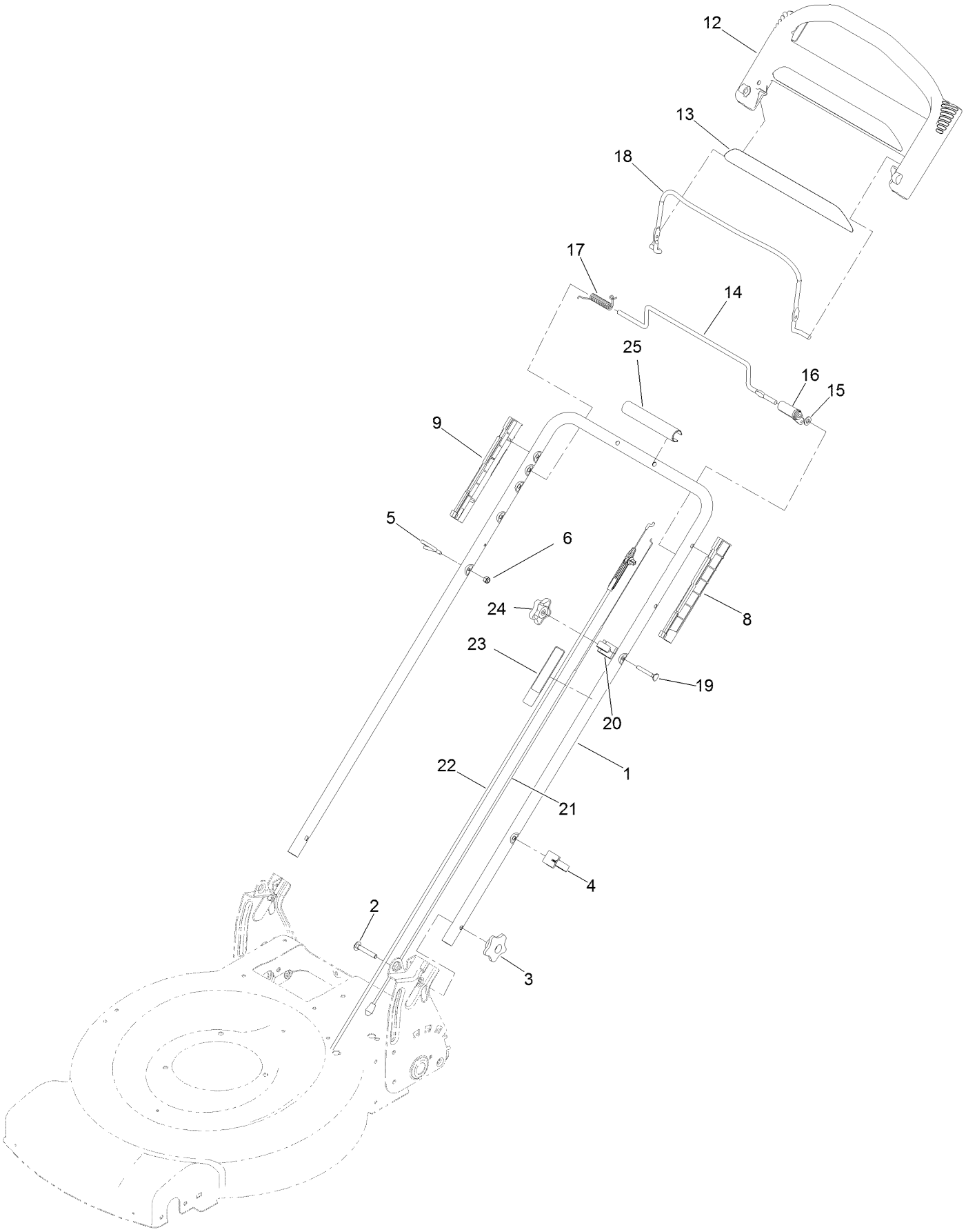

# Handle Assembly (continued)

| Ref. | Part Number | Qty. | Description |
|---|---|---|---|
| 1 | 130-6715-05 | 1 | Handle |
| 2 | 3230-6 | 2 | Screw-CARR |
| 3 | 117-5976 | 2 | Knob-Handle |
| 4 | 114-7988 | 1 | Guide-Cable |
| 5 | 86-9671 | 1 | Guide-Rope |
| 6 | 3296-73 | 1 | Nut-Lock, NI |
| 8 | 105-6842 | 1 | Guide-LH |
| 9 | 105-6841 | 1 | Guide-RH |
| 12 | 104-8678 | 1 | Handle-Control |
| 13 | 117-1019 | 1 | Decal |
| 14 | 99-1588 | 1 | Bar-Control, Traction |
| 15 | 3256-23 | 1 | Washer-Plain |
| 16 | 99-1589 | 1 | Lever-Traction |
| 17 | 121-9118 | 1 | Spring-Torsion |
| 18 | 104-8679-03 | 1 | Bail-Brake |
| 19 | 95-4453 | 1 | Screw |
| 20 | 99-5239 | 1 | Anchor-Cable |
| 21 | 115-8435 | 1 | Cable-Traction |
| 22 | 131-4530 | 1 | Cable-Brake |
| 23 | 131-0894 | 1 | Decal-Traction, Adjust |
| 24 | 131-0897 | 1 | Knob-Handle, Locking |
| 25 | 131-4551 | 1 | Handle-Cover |

# Attachments and Accessories

## For 20337 22in Recycler Lawn Mower

| Product Name | Model/Part |
|---|---|
| Traction Assist Handle Kit | 108-8120 |
| WPM Maintenance Kit, 2014 and Newer | 130-8134 |
| Replacement Bag | 59310 |
| Replacement Frame and Bag Kit | 59312 |
| 22 Inch Atomic Blade | 59534P |

## Notes:

## Notes:

## Notes:




**Count on it.**