Form No. 3372-226 Rev E

TORO®

Count on it.

Parts Catalog

Greensmaster® 3320 2-Wheel Drive Traction Unit

Model No. 04530—Serial No. 312000001 and Up

Register at www.Toro.com.
Original Instructions (EN)

CE

3372-226 E

Ordering Replacement Parts

To order replacement parts, please supply the part number, the quantity, and the description of each part desired.

Understanding Reference Numbers

Each identified part in an illustration has a reference number. The reference number for a part also appears in the parts list, along with other information about the part.

This catalog uses two special reference number formats, one to indicate parts in a service assembly and another to indicate the quantity of a given part in an illustration.

Service Assembly Reference Numbers

Parts in service assemblies have reference numbers in the form a:b. The a represents the reference number of the entire service assembly and the b represents a sequential number unique to each part within the service assembly.

For example, a wheel assembly might be identified by reference number 6, the tire by 6:1, the valve by 6:2, and the wheel by 6:3. When you order the assembly identified by reference number 6, you receive all parts identified by reference numbers 6:1,6:2, and 6:3. However, you may also order any part individually. Reference numbers of this type appear in illustration and in parts lists.

Reference Numbers Indicating Quantity

In an illustration, if a reference number indicates more than one part, the reference number has the form nX y. The n represents the quantity of the part, the X is the multiplication symbol, and the y represents the reference number.

For example, in an illustration, the reference number 2X 37 means that two of the parts identified by reference number 37 are indicated.

Contents

Roll-Over Protection System Assembly . . . 4
Brake Cable Grommet Assembly . . . 5
Frame Assembly . . . 6
Platform Assembly . . . 7
Right Hand Support Platform Assembly . . . 8
Seatbase Assembly . . . 9
Steering Arm and Adjuster Assembly . . . 10
Brake Cable and Lever Assembly . . . 11
Back Wheel Assembly . . . 12
Hydraulic Cylinder Assembly No. 117-4480 . . . 13
Front Wheel Assembly . . . 14
Right Hand Brake Assembly No. 115-9441 . . . 15
Left Hand Brake Assembly No. 115-9440 . . . 16
Right Hand Wheel Motor Assembly No. 117-4302 . . . 17
Left Hand Wheel Motor Assembly No. 117-4303 . . . 18
Console and Reel Control Assembly . . . 19
Traction Interface Control Assembly . . . 20
Ignition, Throttle and Choke Control Assembly . . . 21
Console Cable Routing Assembly . . . 22
Engine and Exhaust Assembly . . . 23
Generator and Engine Frame Assembly . . . 24
Generator/Controller Assembly No. 117-8185 . . . 25
Generator Assembly No. 117-8182 . . . 26
Generator Service Assembly No. 119-1069 . . . 27
Battery Assembly . . . 28
Wire Harness Assembly . . . 29
Pump Coupling Assembly . . . 30
Hydraulic Pump Assembly No. 114-9957 . . . 31
Neutral Centering Assembly . . . 33
Traction Drive Hydraulic Line Assembly . . . 34
Traction Drive Hose Routing Assembly . . . 35
Lift Circuit Assembly . . . 36
Steering Valve Assembly No. 114-4672 . . . 38
Hydraulic Cylinder Assembly No. 119-8129 . . . 39
Hydraulic Cylinder Assembly No. 119-8128 . . . 40
Hydraulic Lift Manifold Assembly . . . 41
Hydraulic Lift Manifold Assembly No. 117-9856 . . . 42
Steering Circuit Assembly . . . 43
Steering Circuit Assembly (2) . . . 44
Hydraulic Gear Pump Assembly No. 114-9958 . . . 45
Fuel Line and Carbon Canister Hose Routing Assembly . . . 46
Fuel Tank Assembly . . . 48
Hydraulic Tank Assembly . . . 49
Hydraulic Tank Cover Assembly . . . 50
Suspension and Basket Assembly . . . 51
Suspension A-Arm Assembly . . . 52
Suspension Crossarm Assembly . . . 53
Suspension Pin Position Assembly . . . 54
Electric Reel Motor Assembly . . . 55
Electric Reel Motor Assembly No. 119-7575 . . . 56
Electric Motor Assembly . . . 57
Electric Mow Battery Assembly . . . 58
Attachments and Accessories . . . 60

© 2017—The Toro® Company

8111 Lyndale Avenue South
Bloomington, MN 55420

Contact us at www.Toro.com.
Printed in the USA.

All Rights Reserved

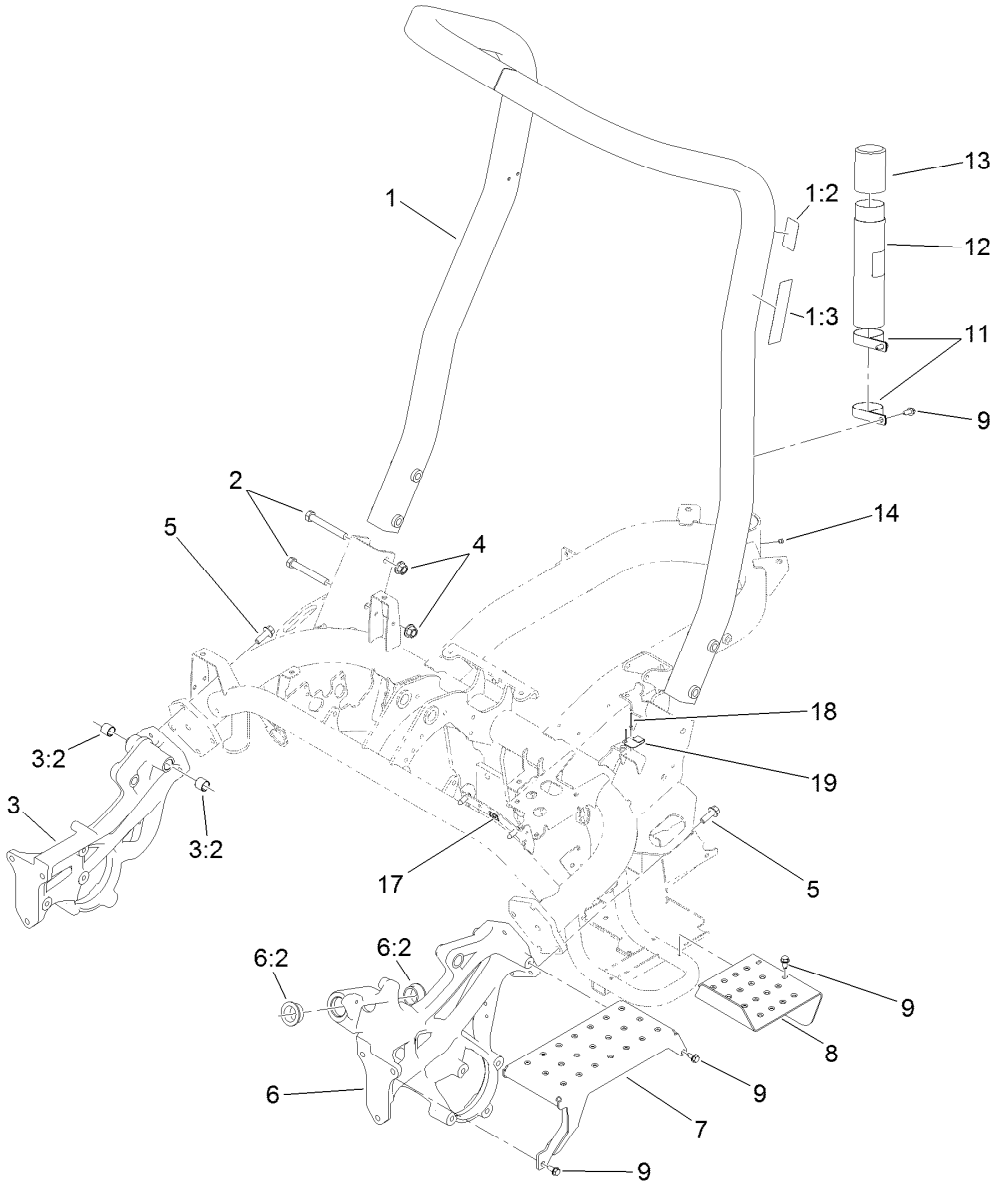

Roll-Over Protection System Assembly

Ref.	Part Number	Qty.	Description
1	115-8206	1	ROPS Assembly
1:2	115-8199	1	Decal-ROPS
1:3	115-8226	1	Decal-ROPS
2	325-35	4	Screw-HH
3	117-9023	1	Casting-Side, RH
3:2	94-9609	2	Bushing-Straight
4	99-5107	4	Nut-Lock
5	117-9035	8	Screw-HHF
6	117-9022	1	Casting-Side, LH
6:2	60-0080	2	Bushing

Ref.	Part Number	Qty.	Description
7	117-9051-01	1	Step
8	119-4468-01	1	Plate-Step
9	32104-32	9	Screw-HWH
11	2412-133	2	Clamp-R
12	104-7050	1	Tube-Manual
13	104-7048	1	Cap-Housing
14	302-59	1	Plug-Threaded
17	119-1730	1	Receptacle-Clip, Mini
18	3269-32	2	Rivet-Pop
19	121-5865	1	Clip-Cover, Back

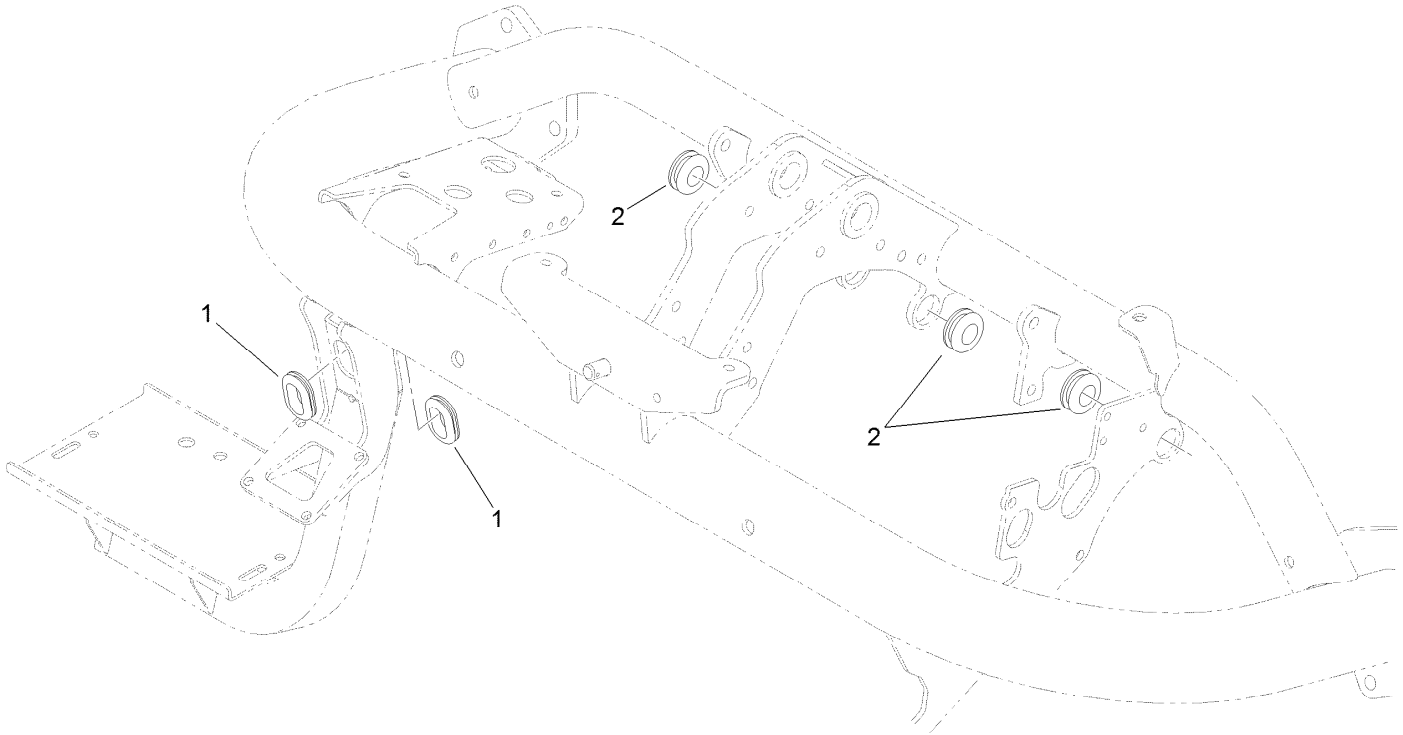

Brake Cable Grommet Assembly

Ref.	Part Number	Qty.	Description
1	240-5	2	Grommet
2	98-8529	3	Grommet

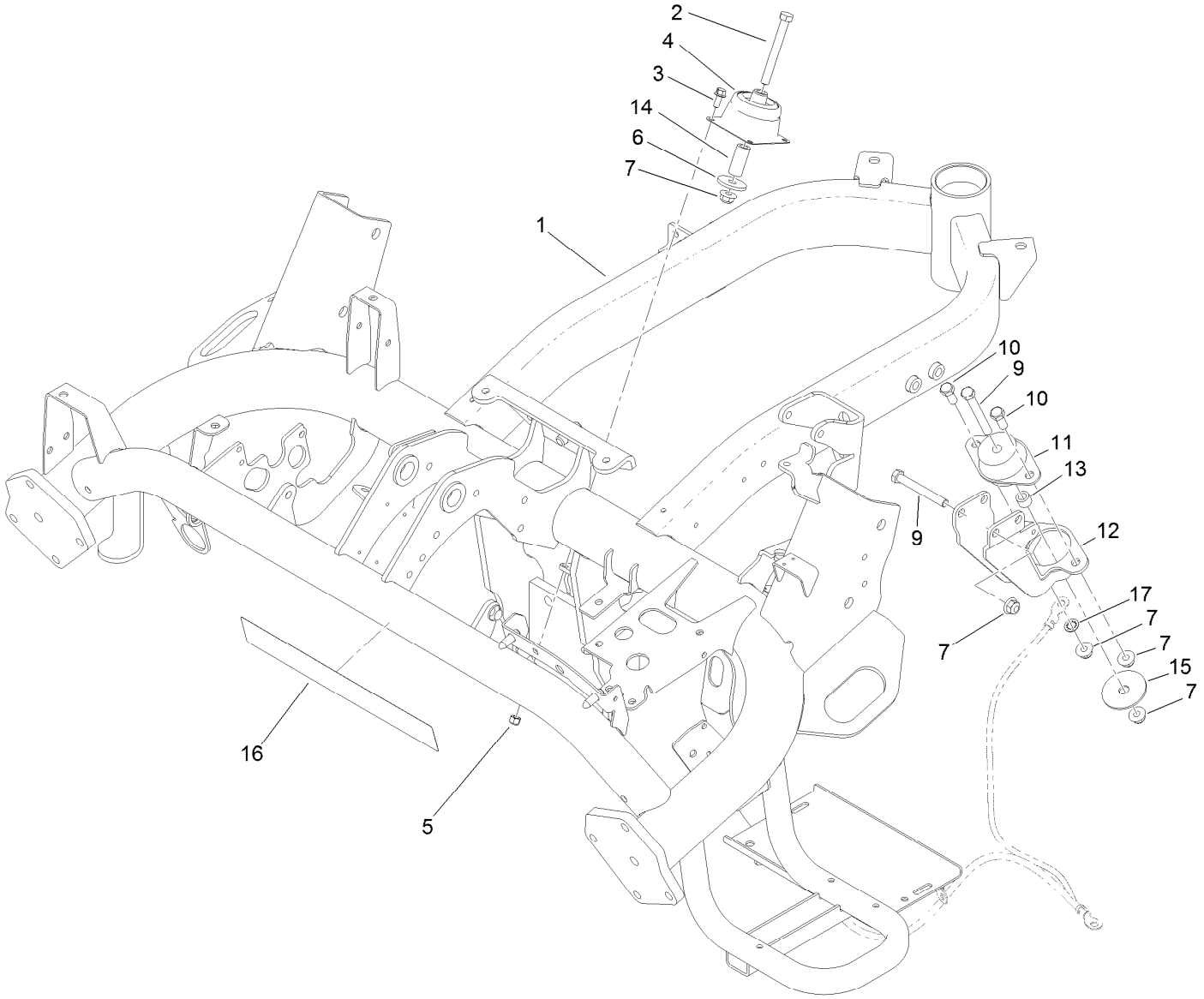

Frame Assembly

Ref.	Part Number	Qty.	Description
1	121-5876-01	1	Frame
2	323-20	2	Screw-HH
3	3234-33	8	Screw-HHF
4	117-9327	2	Mount-Engine
5	3296-42	8	Nut-Lock, NI
6	117-9330	2	Spacer
7	104-8301	7	Nut-HF, NI
9	323-14	3	Screw-HH

Ref.	Part Number	Qty.	Description
10	323-5	2	Screw-HH
11	53-9680	1	Mount-Engine
12	117-9256-01	1	Mount-Engine, Rear
13	52-2480	1	Spacer-Wheel
14	104-0151	2	Spacer
15	87-5100	1	Washer-Snubbing
16	115-8195	1	Decal
17	3254-6	1	Washer-Lock, Internal

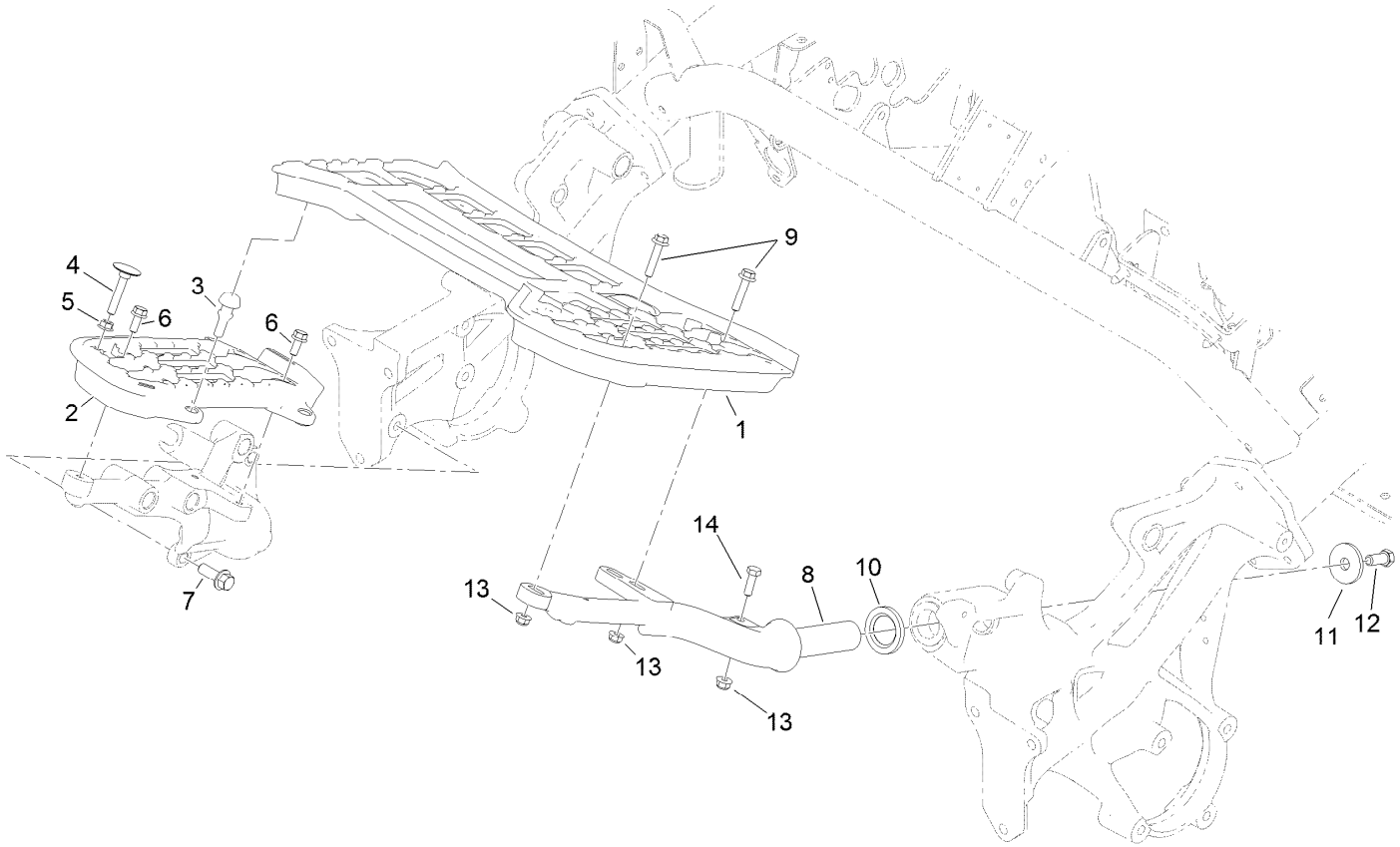

Platform Assembly

Ref.	*Part Number*	*Qty.*	*Description*
1	117-9009	1	Platform-LH
2	117-9008	1	Platform-RH
3	117-9072	2	Bumper-Rubber
4	115-8240	1	Screw-Elevator
5	32128-20	1	Nut-HF
6	3234-47	3	Screw-HHF
7	117-9035	3	Screw-HHF
8	117-9006-01	1	Support-Platform, LH
9	115-1794	3	Screw-HHF
10	94-8946	1	Washer-Thrust
11	84-1560	1	Washer-Thrust
12	324-4	1	Screw-HH
13	104-8300	4	Nut-HF, NI
14	322-5	1	Screw-HH

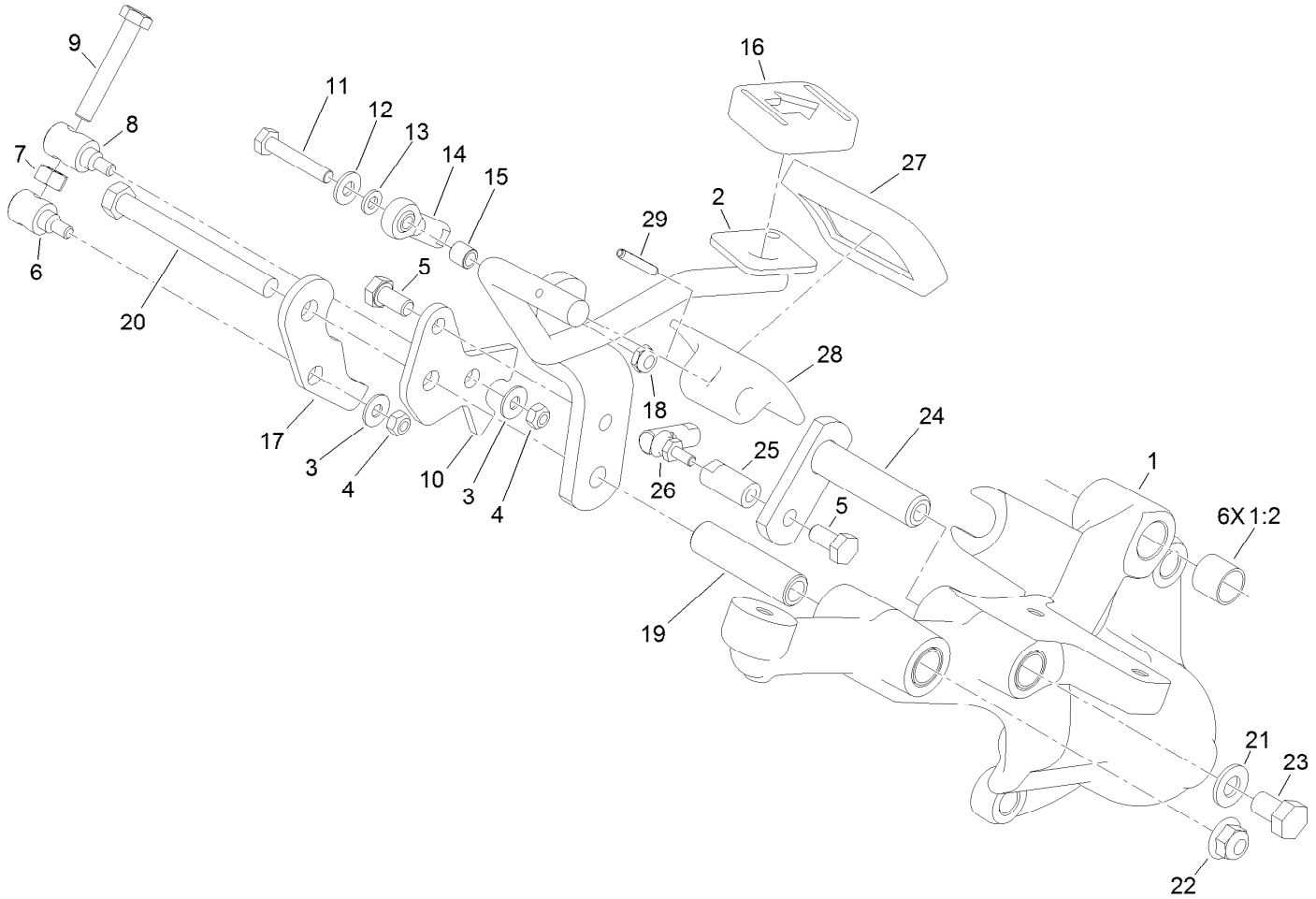

Right Hand Support Platform Assembly

Ref.	Part Number	Qty.	Description
1	117-9019	1	Support-Platform, RH
1:2	256-311	6	Bushing-Split
2	119-1725-01	1	Rod-Traction
3	3256-1	2	Washer-Flat
4	33023-00	2	Nut-Lock
5	33114-016	2	Screw-HH
6	94-1374	1	Trunnion-Bracket, Mow
7	33014-00	1	Nut-Hex
8	94-1375	1	Trunnion-Bracket, Lock
9	94-3489	1	Screw-HH
10	117-9021	1	Bracket-Lock
11	321-9	1	Screw-HH
12	3256-22	1	Washer-Flat
13	33093-00	1	Washer-Flat
14	2411-41	1	Rod End-Ball Joint

Ref.	Part Number	Qty.	Description
15	99-3545	1	Spacer
16	74-9110	1	Pad-Pedal, Reverse
17	119-9315	1	Bracket-Mow
18	3296-56	1	Nut-Lock, NI
19	94-1371	1	Spacer
20	323-42	1	Screw-HH
21	3256-24	1	Washer-Flat
22	104-8301	1	Nut-HF, NI
23	33115-016	1	Screw-HH
24	94-1300	1	Lock-Neutral
25	94-1386	1	Shaft-Pedal
26	2411-38	1	Joint-Ball
27	74-9100	1	Pad-Pedal, Forward
28	117-9507	1	Pedal-Accelerator
29	32121-45	1	Pin-Spring

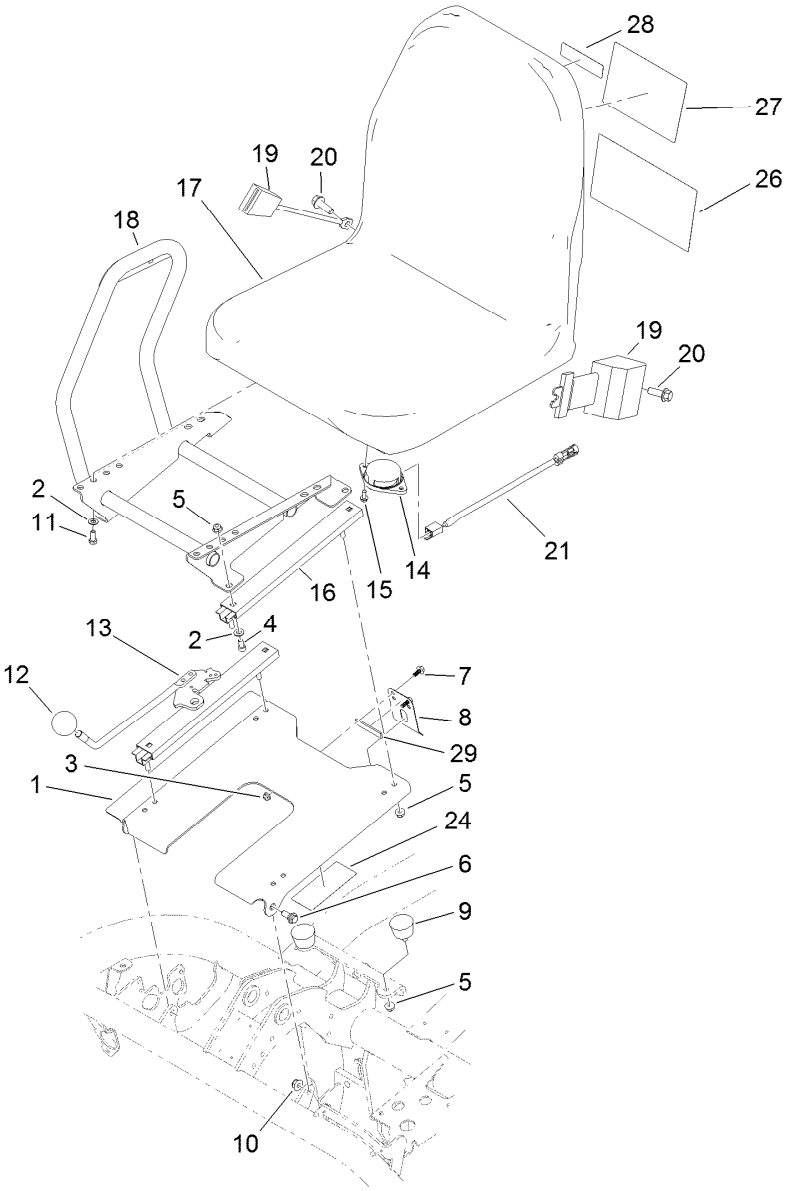

Seatbase Assembly

Ref.	Part Number	Qty.	Description
1	117-4440-03	1	Plate-Seat
2	3256-23	8	Washer-Plain
3	104-7201	2	Nut-HF
4	3274-10	4	Screw-HSH
5	104-8300	10	Nut-HF, NI
6	94-7582	2	Bolt-Shoulder
7	99-6810	2	Screw-HHF
8	66-2630	1	Latch-Seat
9	68-3270	2	Bumper-Rubber
10	104-8301	2	Nut-HF, NI
11	322-3	4	Screw-HH
12	233-48	1	Knob
13	119-4483	1	Seat Adjuster Lever ASM
14	92-6282	1	Switch-Seat
15	32144-10	2	Screw-HWH
16	92-8990	1	Adjuster-Slave
17	104-4620	1	Seat
18	119-1721-03	1	Mount-Console
19	100-4928	1	Belt-Seat

Ref.	Part Number	Qty.	Description
20	117-9035	2	Screw-HHF
21	108-8657	1	Harness-Wire, Seat
24	115-8200	1	Decal-Reference, Fuse
26	115-8159	1	Decal-Service, Spanish
26	115-8160	1	Decal-Service, French
26	115-8161	1	Decal-Service, German
26	115-8162	1	Decal-Service, Swedish
26	115-8163	1	Decal-Service, Italian
26	115-8164	1	Decal-Service, Portuguese
26	115-8165	1	Decal-Service, Norwegian
26	115-8166	1	Decal-Service, Finnish
26	115-8167	1	Decal-Service, Danish
26	115-8168	1	Decal-Service, Dutch
26	115-8169	1	Decal-Service, Japanese
26	119-9345	1	Decal-Aid, Quick Reference
27	115-8156	1	Decal-Speed, Clip
28	117-2718	1	Decal-Arrester, Spark
29	120-5753	1	Strip-Foam

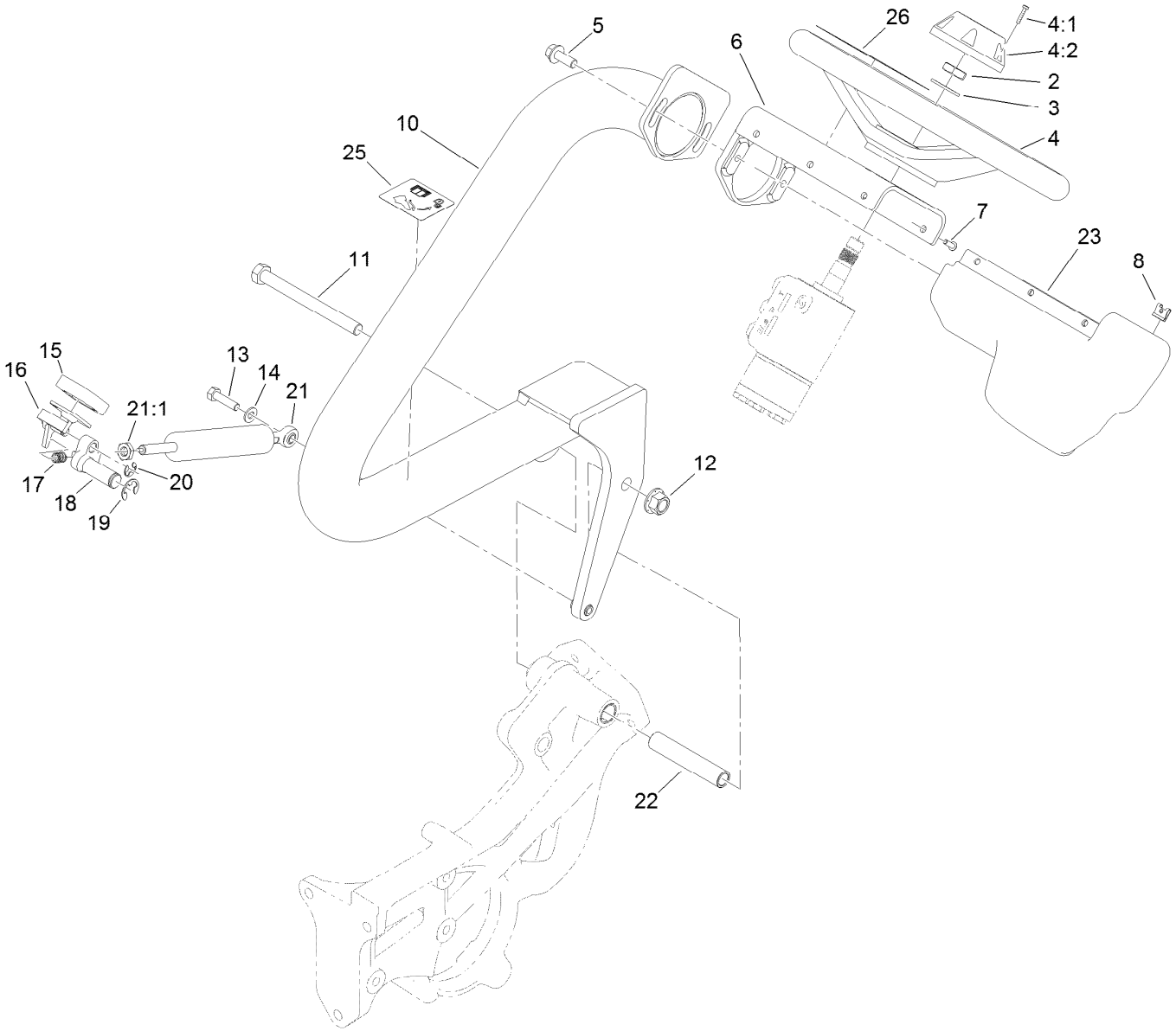

Steering Arm and Adjuster Assembly

Ref.	Part Number	Qty.	Description
2	3296-33	1	Nut-Lock, NI
3	3256-27	1	Washer-Flat
4	75-0560	1	Steering Wheel ASM
4:1	32144-21	1	Screw
4:2	68-5140	1	Cap-Wheel, Steering
5	3234-42	2	Screw-HHF
6	117-9346-03	1	Mount-Steering
7	3274-39	6	Screw-HSBH
8	3290-277	6	Nut-Speed
10	117-4444-01	1	Arm-Steering
11	325-22	1	Screw-HH
12	99-5107	1	Nut-Lock
13	322-47	1	Screw-HH
14	3256-23	1	Washer-Plain

Ref.	Part Number	Qty.	Description
15	74-9110	1	Pad-Pedal, Reverse
16	117-4457	1	Lever ASM
17	106-9791	1	Spring
18	117-9024	1	Lever-Pivot
19	32120-19	1	E-Ring
20	105-7004	1	E-Ring
21	117-4447	1	Cylinder-Gas
21:1	112-8617	1	Nut-Hex
22	117-9002	1	Spacer
23	119-9300	1	Cover-Valve, Steering
25	119-9346	1	Decal-Arm, Steering
26	121-2641	1	Decal-Danger
26	121-2640	1	Decal-Danger, CE

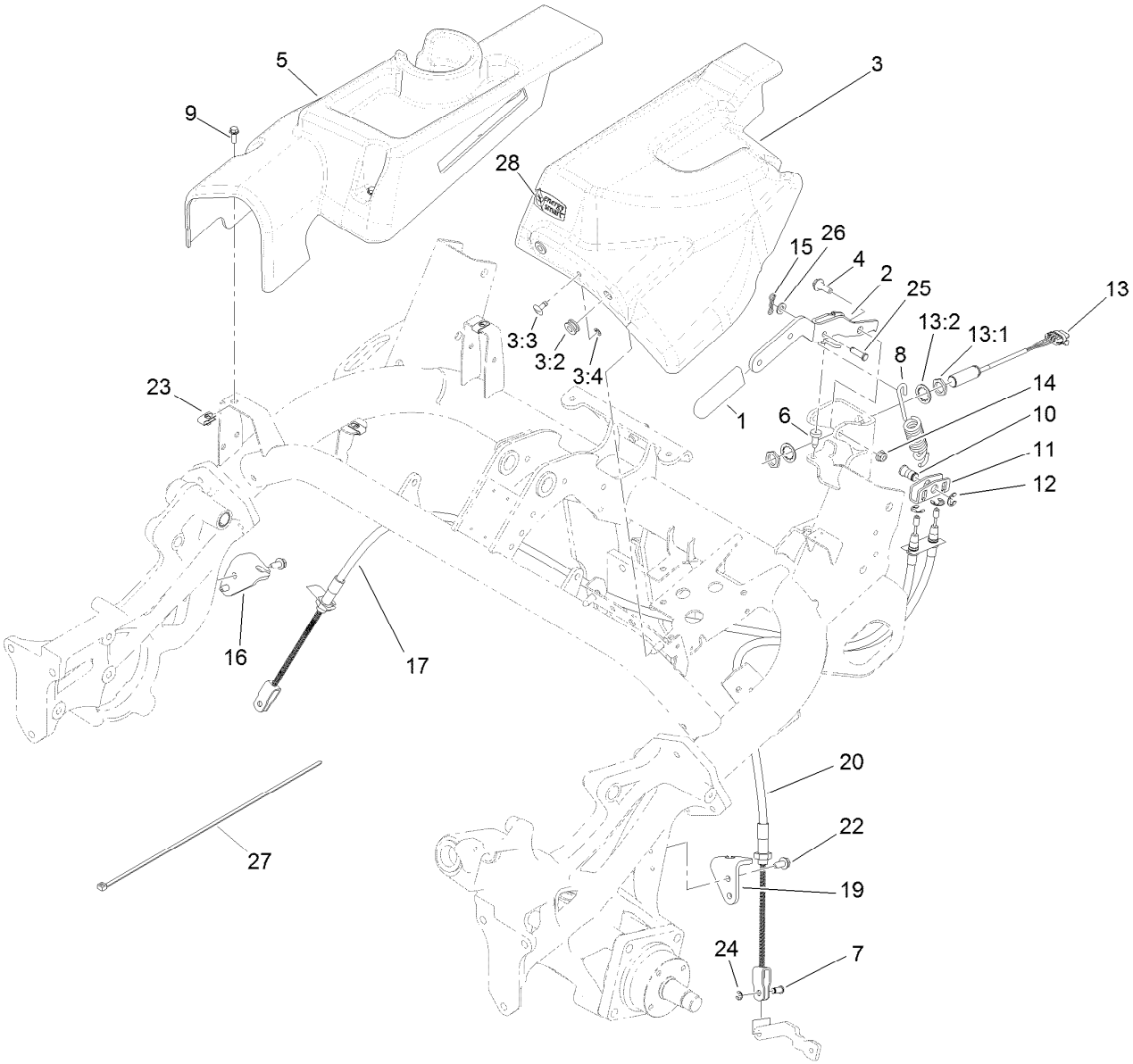

Brake Cable and Lever Assembly

Ref.	Part Number	Qty.	Description
1	21-1880	1	Grip-Handle
2	119-2149-03	1	Lever-Brake
3	121-5868	1	LH Cover ASM
3:2	92-5972	2	Grommet-Rubber
3:3	119-1728	1	Stud-1/4 Turn
3:4	119-1729	1	Retainer-Stud
4	116-1297	2	Screw-Shoulder
5	119-1678	1	Cover-Side, RH
6	87-8460	1	Bumper-Rubber
7	109-6887	2	Pin-Clevis
8	119-2144	1	Spring-Extention
9	115-5103	3	Screw-HHF
10	119-2146	1	Pin
11	114-9994	1	Bracket-Equalizer, Cable
12	32120-47	3	Ring-Retaining, External
13	115-5300	1	Proximity Switch ASM

Ref.	Part Number	Qty.	Description
13:1	117-3207	2	Nut-Hex
13:2	117-3208	2	Washer-Lock, Internal Tooth
14	104-8300	2	Nut-HF, NI
15	119-1415	1	Pin-Cotter, Locking
16	115-5787	1	Bracket-Brake Cable, RH
17	115-9412	1	Cable-Brake, RH
19	114-9997	1	Bracket-Brake Cable, LH
20	114-9996	1	Cable-Brake, LH
22	32104-32	4	Screw-HWH
23	107069	3	Clip
24	701197	2	E-Ring
25	283-61	1	Pin-Yoke
26	3256-23	1	Washer-Plain
27	3290-379	1	Tie-Cable
28	119-7580	1	Decal-Energy Smart

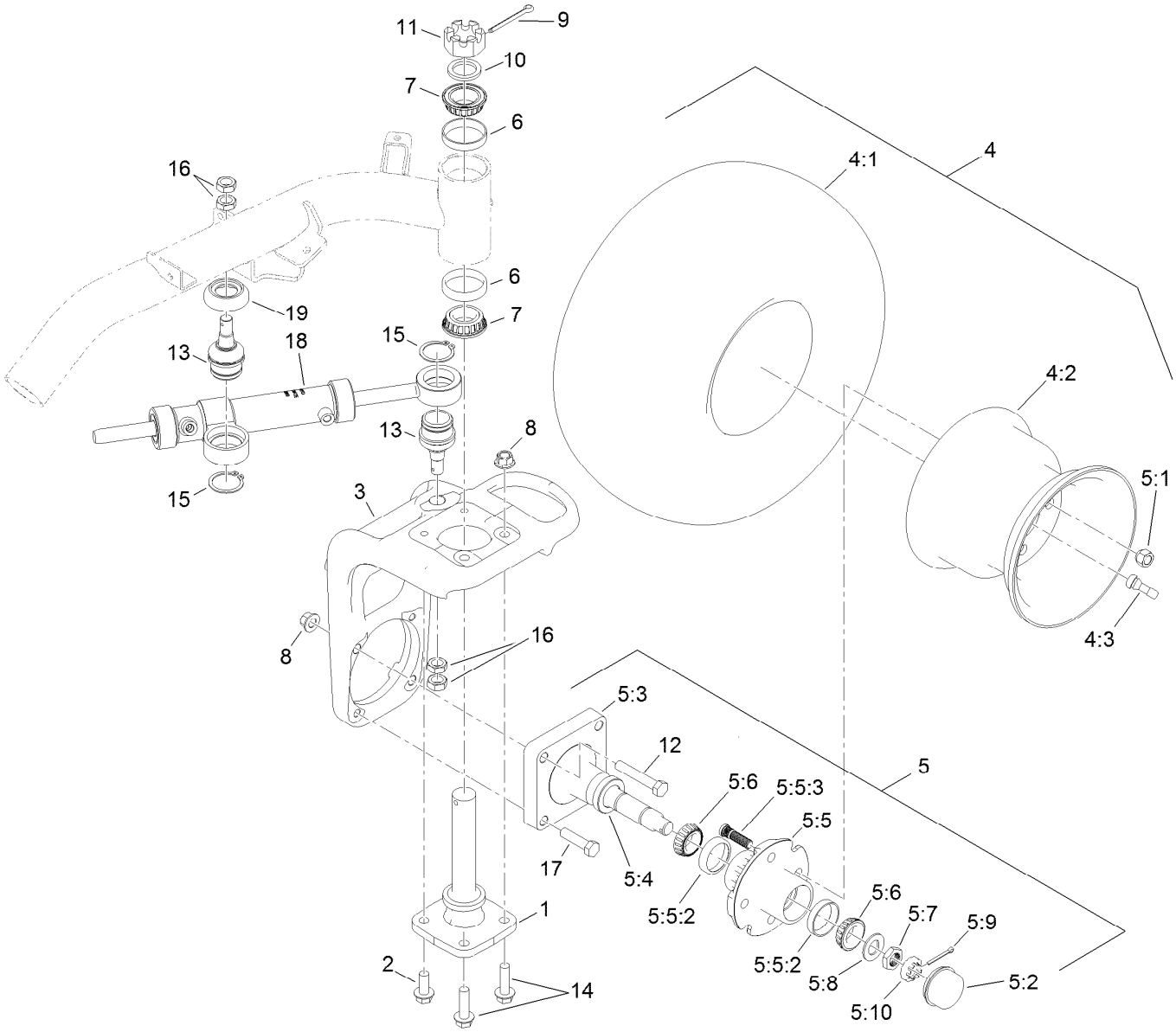

Back Wheel Assembly

Ref.	Part Number	Qty.	Description
1	115-2657	1	Spindle-Steering
2	3234-38	2	Screw-HHF
3	117-4366-01	1	Base-Fork, Rear
4		1	Wheel And Tire ASM ●
4:1	117-9031	1	Tire
4:2	217-60	1	Rim
4:3	232-27	1	Stem-Valve
5	119-4490	1	Wheel Spindle ASM
5:1	242-50	4	Nut-Lug
5:2	241-119	1	Cap-Dust
5:3	112-7173	1	Spindle
5:4	112-1690	1	Seal-Oil
5:5	117-9093	1	Hub ASM
5:5:2	254-72	2	Bearing-Cup, Tapered
5:5:3	114-3918	4	Stud-Wheel
5:6	254-94	2	Bearing-Cone, Tapered
5:7	117-8260	1	Nut

Ref.	Part Number	Qty.	Description
5:8	117-8259	1	Washer-Spindle
5:9	3272-18	1	Pin-Cotter
5:10	93-0307	1	Nut-Lock, Retainer
6	115-9471	2	Bearing-Cup
7	115-9472	2	Bearing-Cone And Seal
8	99-5107	4	Nut-Lock
9	3272-37	1	Pin-Cotter
10	18-6320	1	Washer-Steering
11	32136-9	1	Nut-Hex, Slotted
12	325-12	2	Screw-HH
13	117-9875	2	Joint-Ball
14	3234-22	2	Screw-HHF
15	32151-104	2	Ring-Retaining, External
16	3220-6	4	Nut-Jam
17	325-8	2	Screw-HH
18	117-4480	1	HYD Cylinder ASM
19	120-2026	1	Spacer-Cylinder

● Not serviced separately

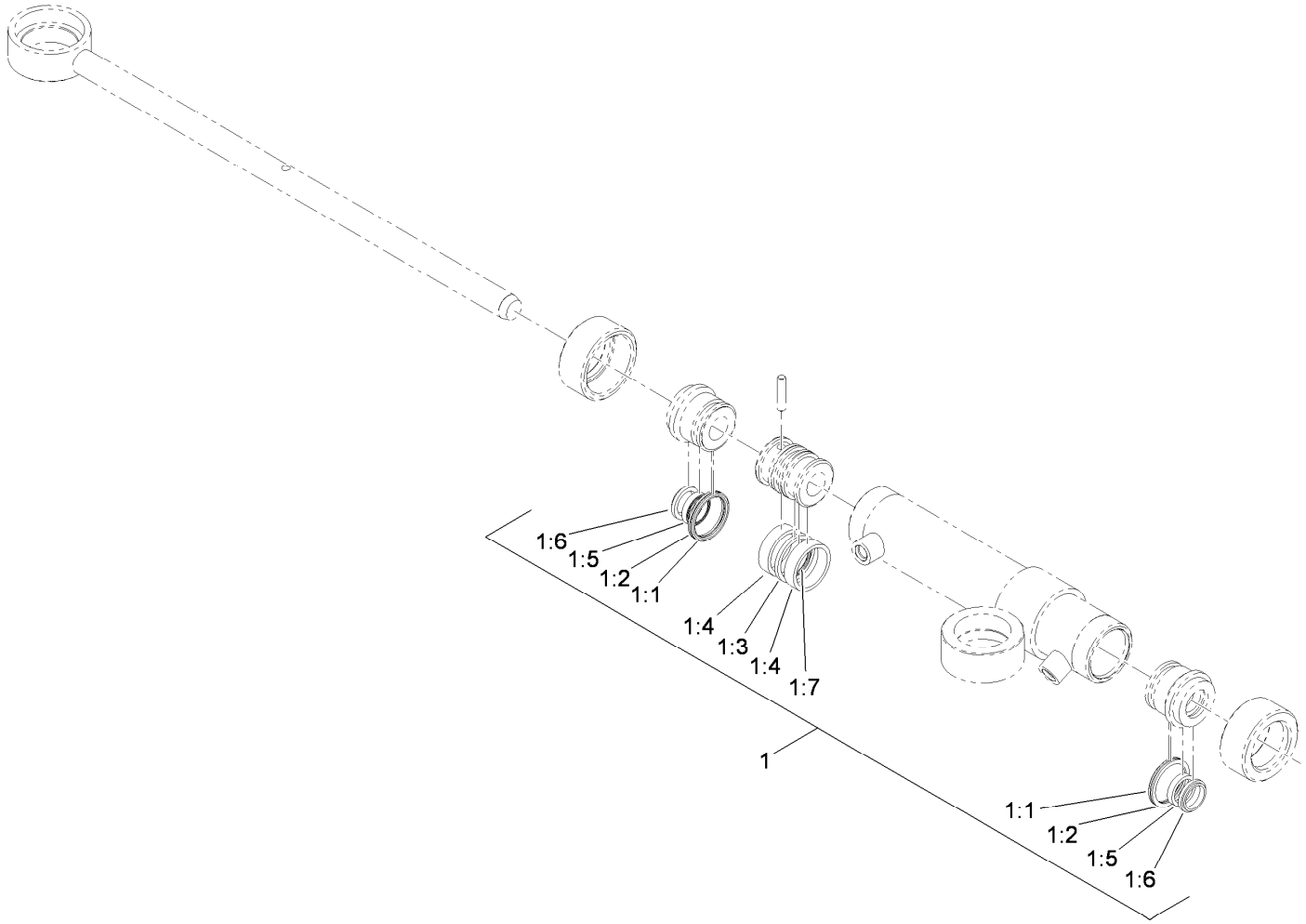

Hydraulic Cylinder Assembly No. 117-4480

Ref.	*Part Number*	*Qty.*	*Description*
1	119-7124	1	Kit-Seal
1:1		2	O-Ring ●
1:2		2	Ring-Backup ●
1:3		1	Seal-Psp ●
1:4		2	Ring-Wear ●
1:5		2	Seal-Bs ●
1:6		2	Seal-Dust ●
1:7		1	O-Ring ●

● Not serviced separately

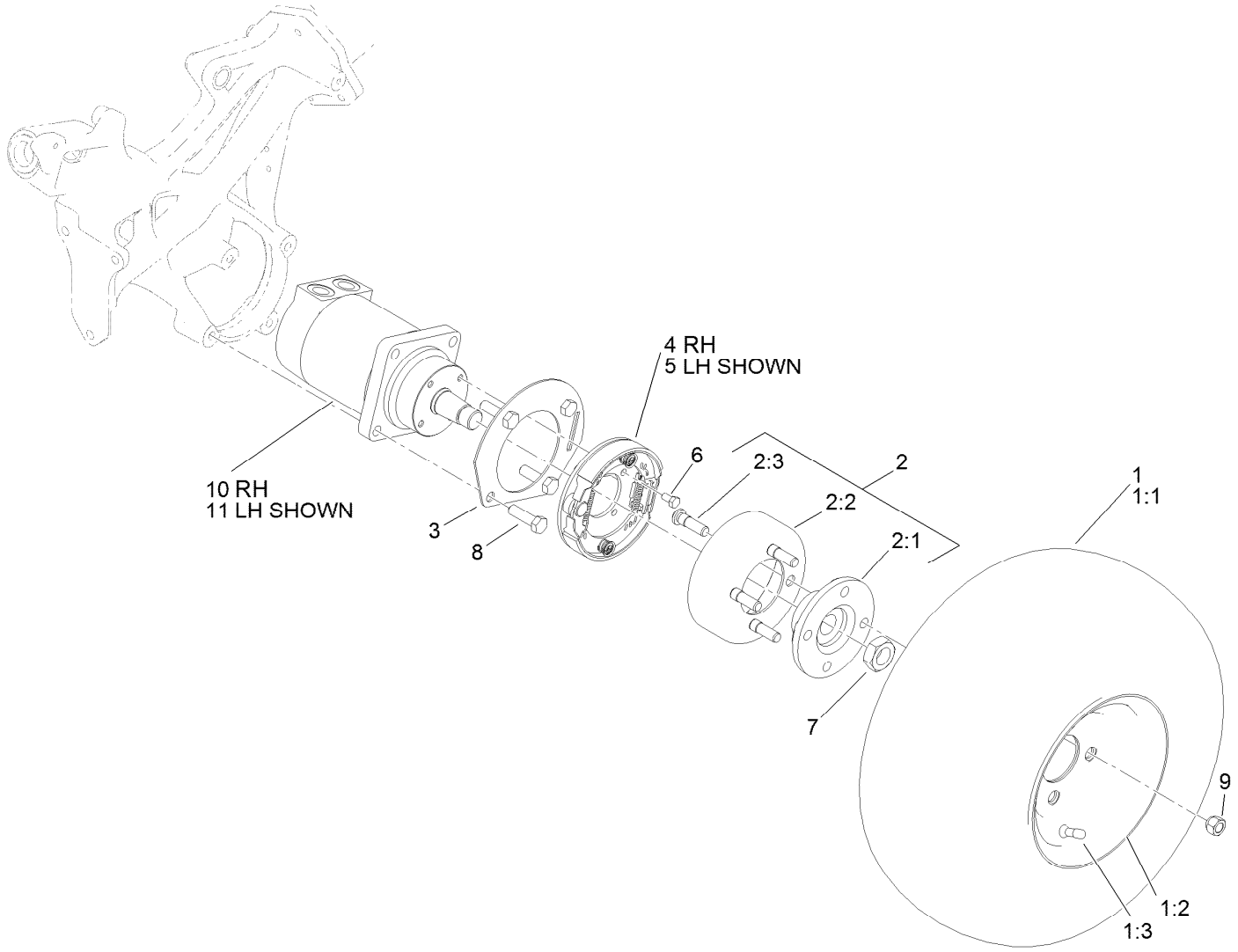

Front Wheel Assembly

Ref.	Part Number	Qty.	Description
1		2	Wheel And Tire ASM ●
1:1	117-9031	1	Tire
1:2	117-9032	1	Rim
1:3	232-27	1	Stem-Valve
2	115-2661	2	Brake Drum ASM
2:1	115-2662-03	1	Hub-Wheel
2:2	115-2663	1	Drum-Brake
2:3	85-6540	4	Stud-Drive
3	114-9998-03	2	Tab-Lever, Brake

Ref.	Part Number	Qty.	Description
4	115-9441	1	RH Brake ASM
5	115-9440	1	LH Brake ASM
6	322-2	8	Screw-HH
7	26-3790	2	Nut-Lock
8	325-7	8	Screw-HH
9	242-50	8	Nut-Lug
10	117-4302	1	RH Wheel Motor ASM
11	117-4303	1	LH Wheel Motor ASM

● Not serviced separately

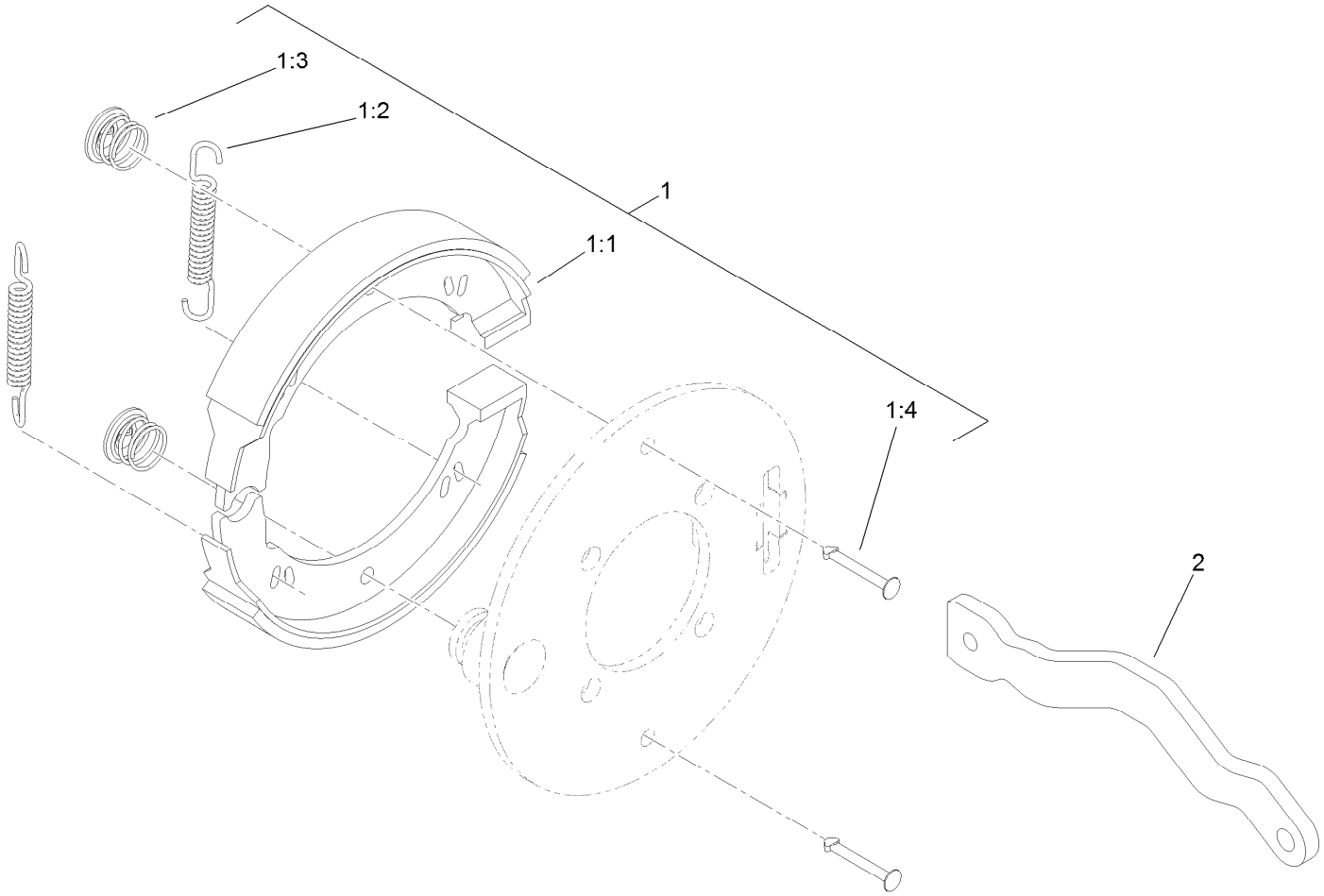

Right Hand Brake Assembly No. 115-9441

Ref.	*Part Number*	*Qty.*	*Description*
1	119-7136	1	Kit-Brake
1:1		2	Shoe-Brake ●
1:2		2	Spring ●
1:3		2	Clip ●
1:4		2	Pin-Retainer ●
2	115-5789	1	Lever-Brake, RH

● Not serviced separately

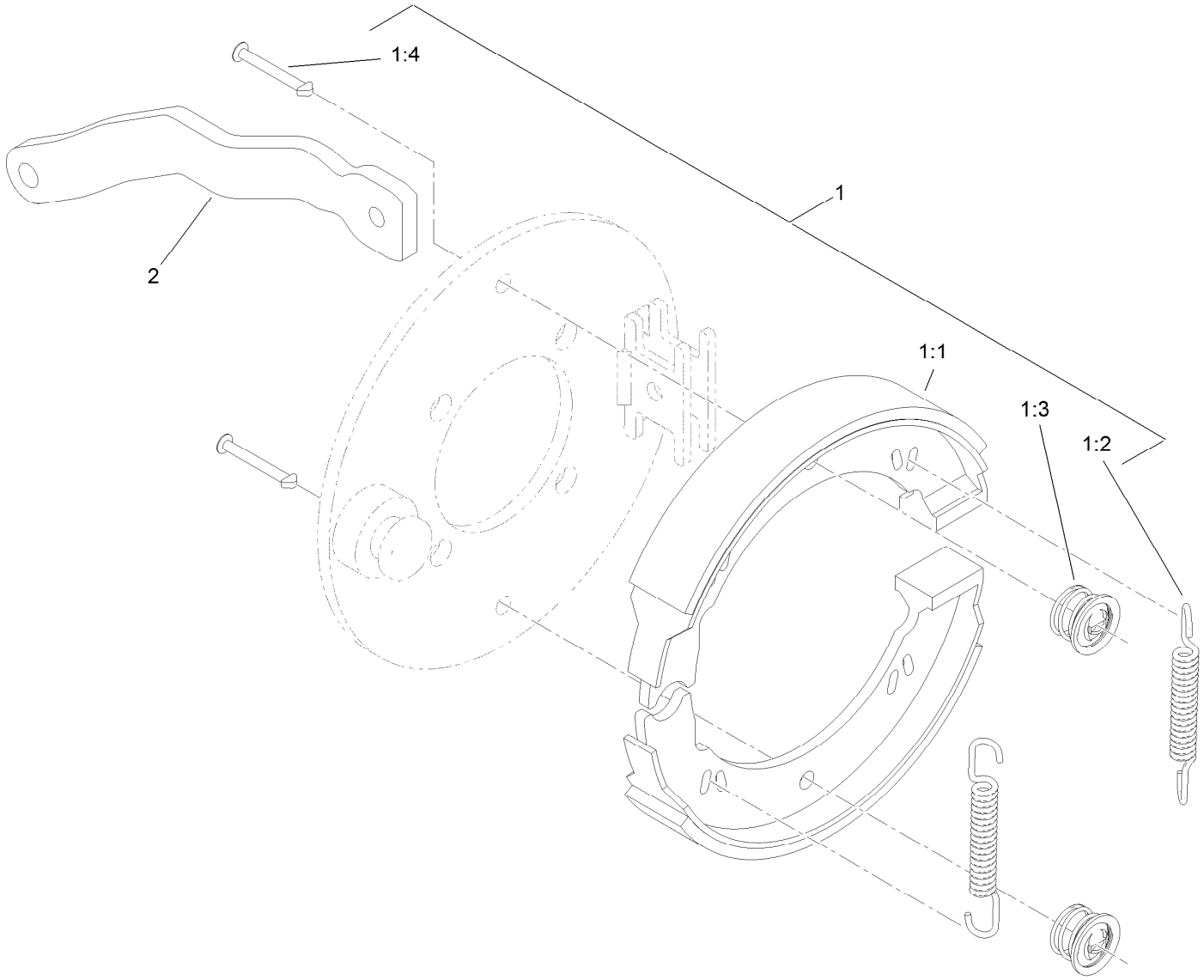

Left Hand Brake Assembly No. 115-9440

Ref.	*Part Number*	*Qty.*	*Description*
1	119-7136	1	Kit-Brake
1:1		2	Shoe-Brake ●
1:2		2	Spring ●
1:3		2	Clip ●
1:4		2	Pin-Retainer ●
2	115-2664	1	Lever-Brake, LH

● Not serviced separately

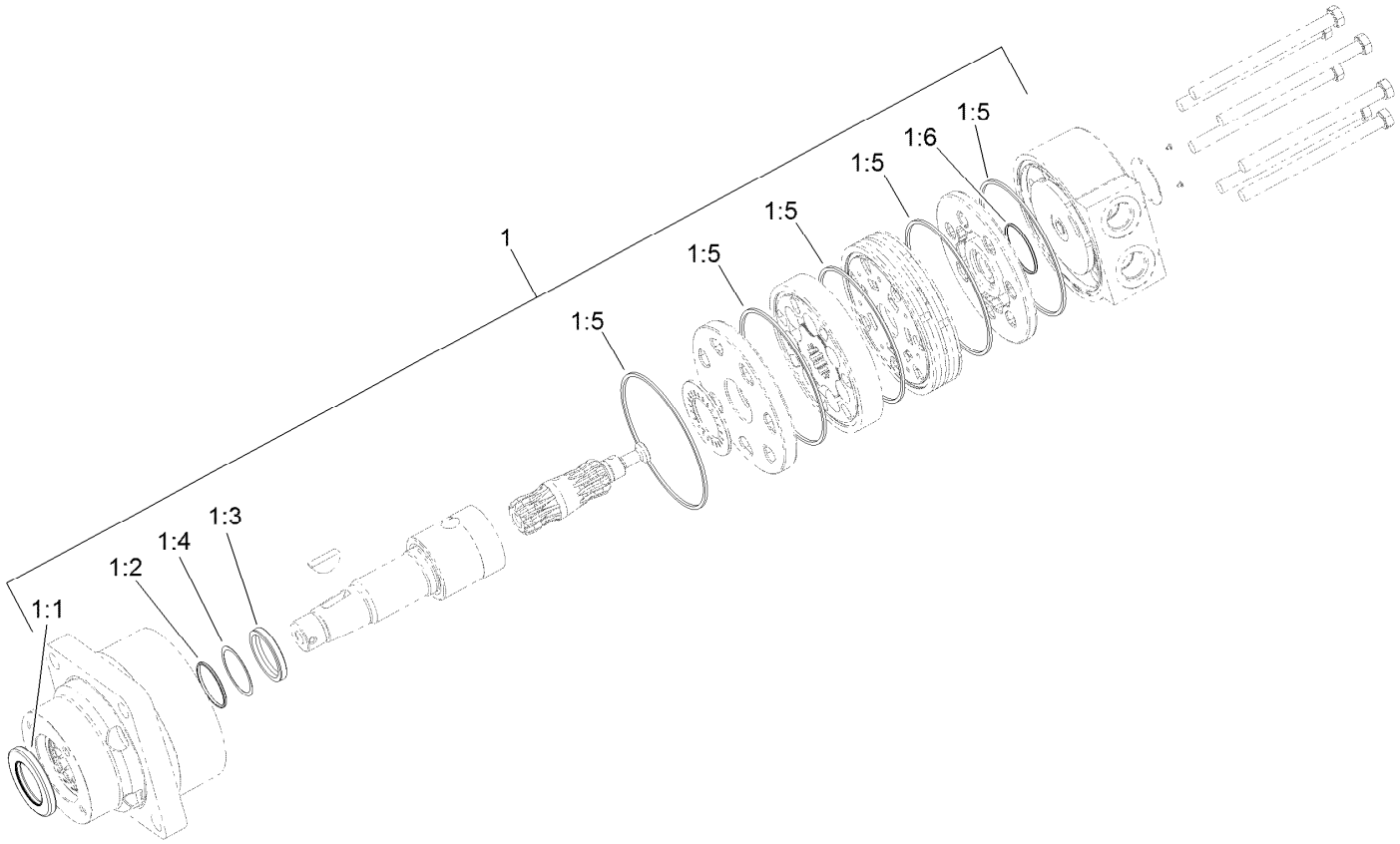

Right Hand Wheel Motor Assembly No. 117-4302

Ref.	*Part Number*	*Qty.*	*Description*
1	94-8178	1	Seal Kit
1:1		1	Seal-Dirt And Water ●
1:2		1	Backup-Ring ●
1:3		1	Seal-Shaft ●
1:4		1	Washer-Backup ●
1:5		5	Seal-Square, Ring (Inner) ●
1:6		1	Seal-Commutator ●

● Not serviced separately

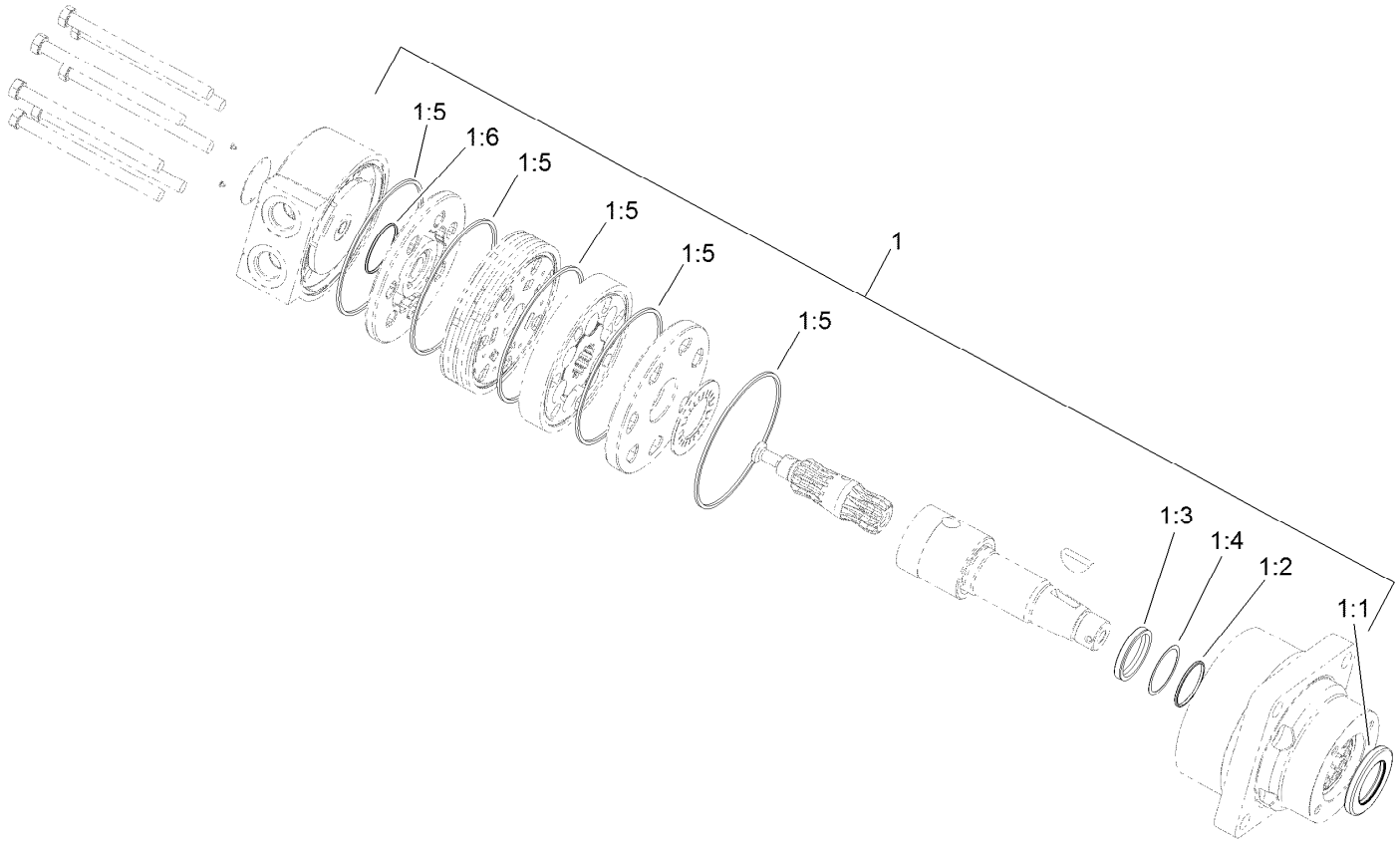

Left Hand Wheel Motor Assembly No. 117-4303

Ref.	*Part Number*	*Qty.*	*Description*
1	94-8178	1	Seal Kit
1:1		1	Seal-Dirt And Water ●
1:2		1	Backup-Ring ●
1:3		1	Seal-Shaft ●
1:4		1	Washer-Backup ●
1:5		5	Seal-Square, Ring (Inner) ●
1:6		1	Seal-Commutator ●

● Not serviced separately

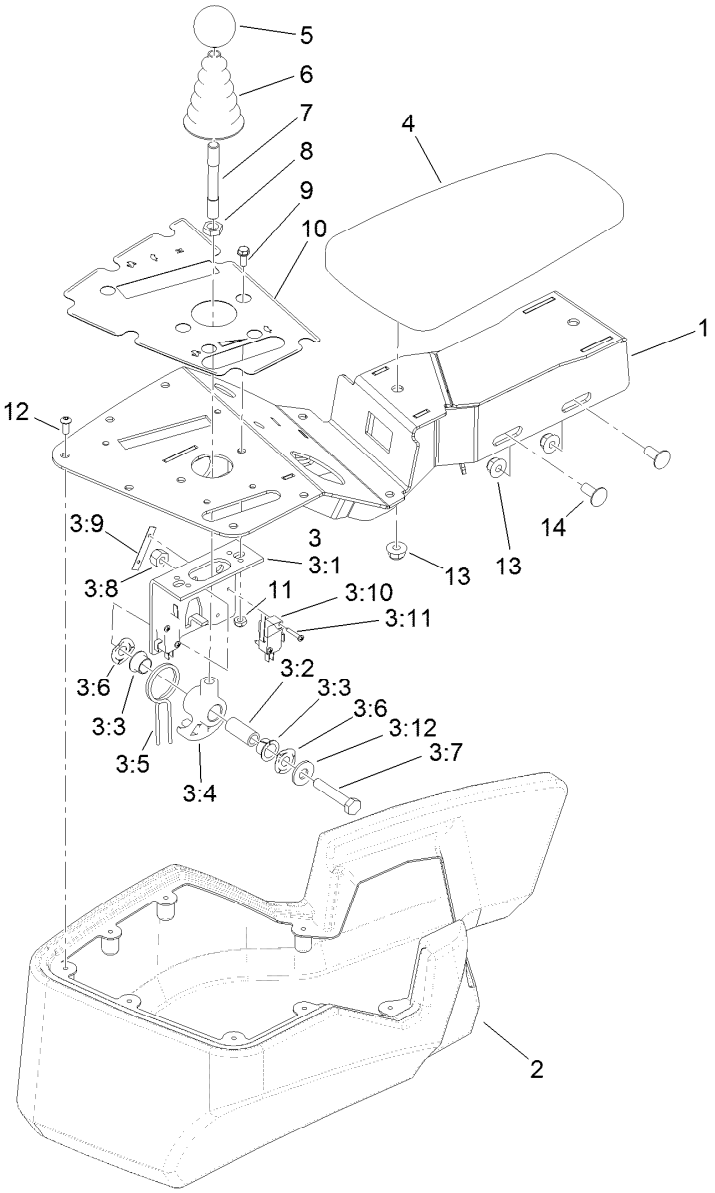

Console and Reel Control Assembly

Ref.	Part Number	Qty.	Description
1	120-2048-03	1	Console
2	121-5152	1	Cover-Console
3	106-4167	1	Joystick Bracket ASM
3:1	115-5357-03	1	Bracket-Joystick
3:2	106-4192	1	Spacer
3:3	93-5547	2	Bushing-Nylon
3:4	105-7507	1	Hub-Pivot, Joystick
3:5	105-8289	1	Spring-Torsion
3:6	106-4193	2	Washer-Finger, Spring
3:7	322-9	1	Screw-HH
3:8	3296-29	1	Nut-Lock, NI
3:9	3290-354	2	Nut-Speed
3:10	108-6496	2	Switch (W/Boot)

Ref.	Part Number	Qty.	Description
3:11	95-3003	4	Screw-PPHTF
3:12	3256-3	1	Washer-Flat
4	108-7602	1	Rest-Arm
5	120-9752	1	Knob-Round, Yellow
6	93-5961	1	Boot-Lever
7	105-8288	1	Rod-Joystick
8	3218-3	1	Nut-Jam
9	3290-321	2	Screw-HWH
10	121-5169	1	Decal-Console
11	3296-12	2	Nut-Lock, NI
12	115-9830	8	Screw-HSBH
13	104-8300	4	Nut-HF, NI
14	3230-23	2	Screw-CARR

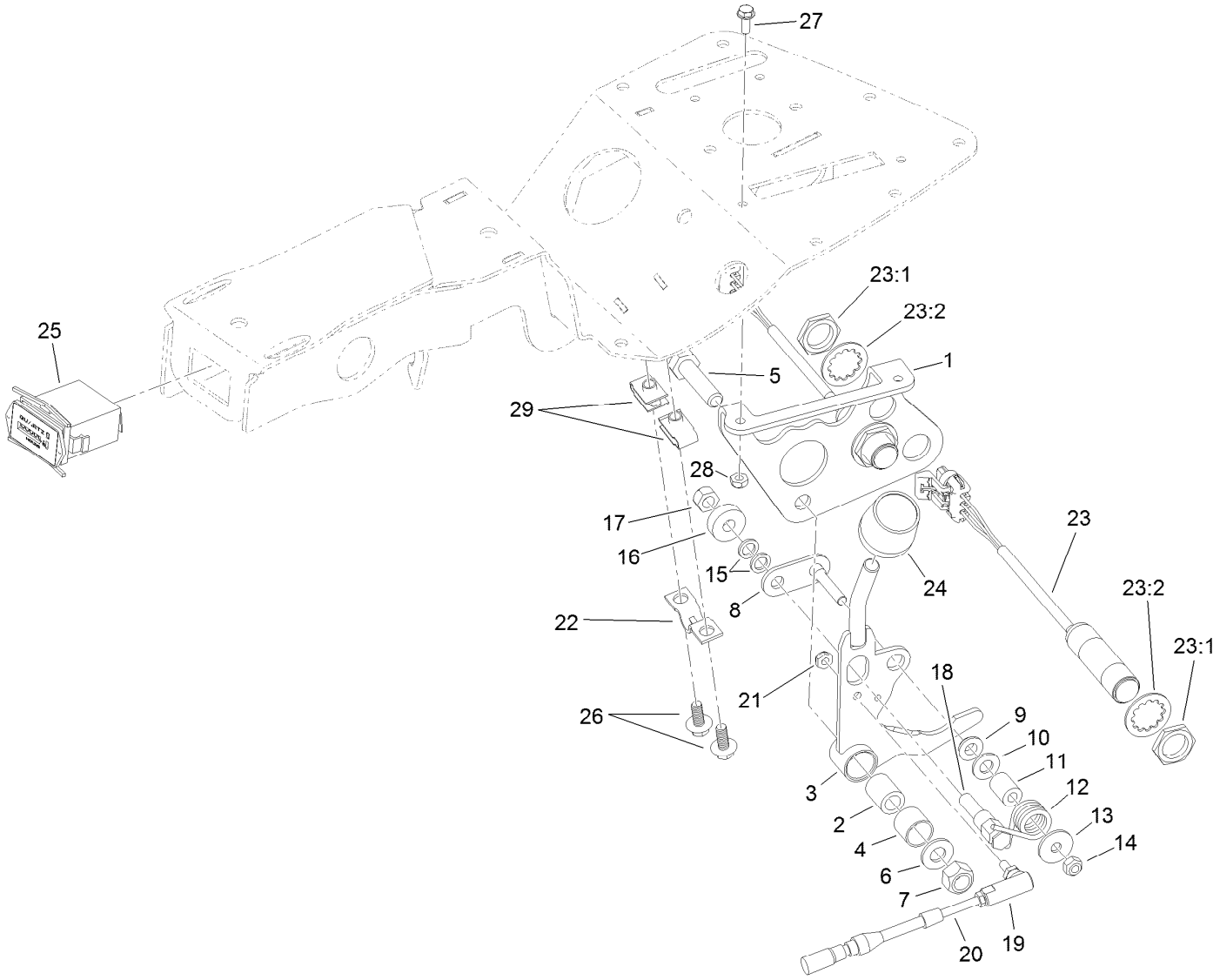

Traction Interface Control Assembly

Ref.	Part Number	Qty.	Description
1	115-9774-03	1	Bracket-Function, Lever
2	94-1378	1	Tube-Pivot, Handle
3	115-9772	1	Handle ASM
4	256-311	1	Bushing-Split
5	33115-040	1	Screw-HH
6	3256-24	1	Washer-Flat
7	33025-00	1	Nut-Lock, NI
8	120-3198	1	Roller-Pivot
9	94-9619	1	Bushing
10	3256-23	1	Washer-Plain
11	94-9618	1	Spacer-Spring
12	94-9620	1	Spring-Torsion
13	3256-67	1	Washer-Flat
14	33023-00	1	Nut-Lock
15	75-5470	2	Spacer-Bearing
16	251-259	1	Bearing-Ball

Ref.	Part Number	Qty.	Description
17	33024-00	1	Nut-Lock, NI
18	94-9617	1	Pin-Spring
19	2411-38	1	Joint-Ball
20	119-1653	1	Cable-Lock, Nuetral
21	3296-27	1	Nut-Lock, NI
22	93-2279	1	Clamp-Cable
23	115-5300	2	Proximity Switch ASM
23:1	117-3207	2	Nut-Hex
23:2	117-3208	2	Washer-Lock, Internal Tooth
24	120-9753	1	Knob-Cylindrical, Orange
25	1-513374	1	Meter-Hour
26	99-6810	2	Screw-HHF
27	3290-321	2	Screw-HWH
28	3296-12	2	Nut-Lock, NI
29	107069	2	Clip

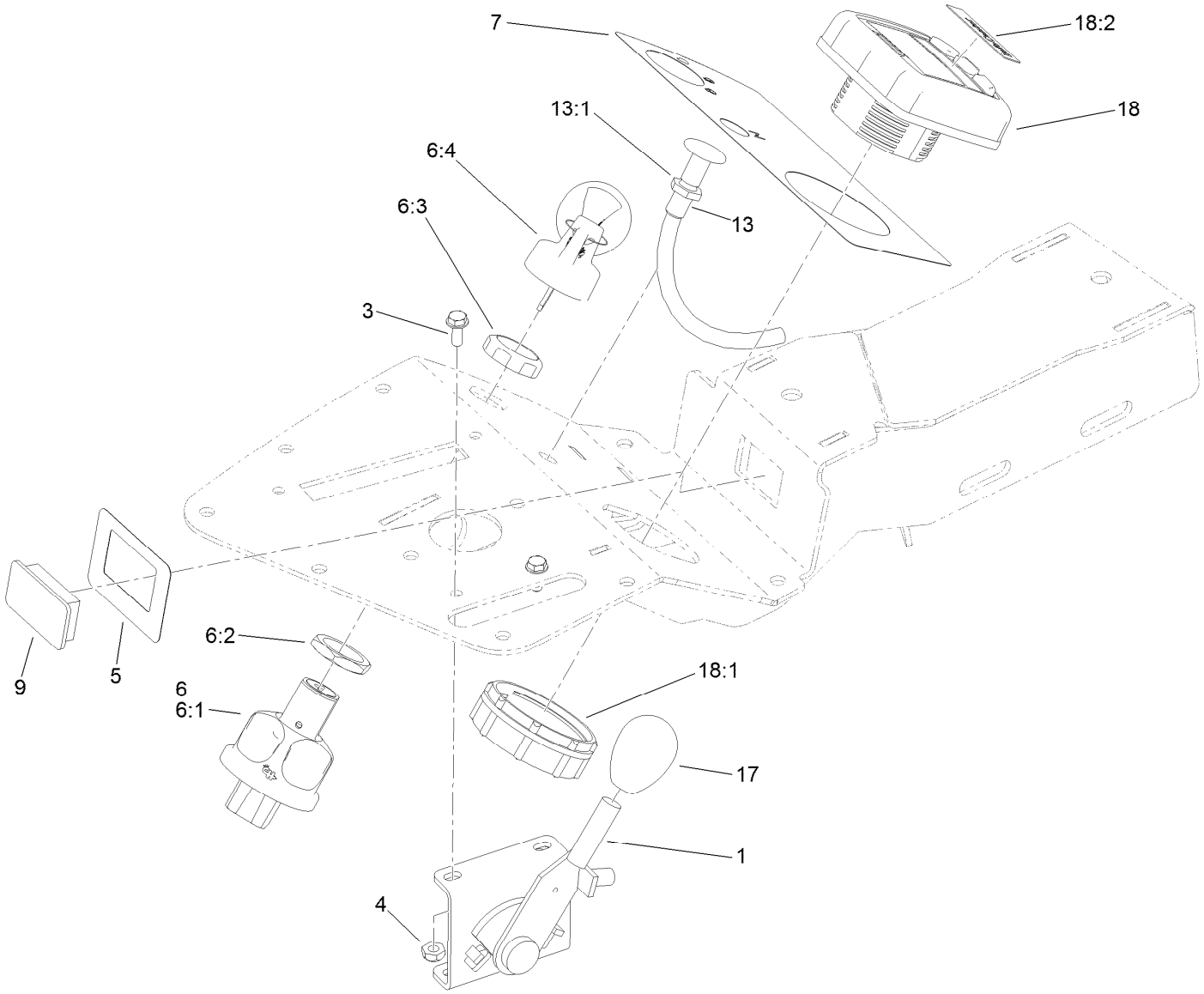

Ignition, Throttle and Choke Control Assembly

Ref.	Part Number	Qty.	Description
1	119-1652	1	Throttle ASM
3	3290-321	2	Screw-HWH
4	3296-12	2	Nut-Lock, NI
5	121-5172	1	Decal-Lights, Console
6	121-5159	1	Ignition Switch ASM
6:1		1	Switch-Ignition ●
6:2	121-5160	1	Nut-Hex
6:3	121-5161	1	Nut-Face
6:4	121-6673	1	Key Set-Ignition

Ref.	Part Number	Qty.	Description
7	121-5171	1	Decal-Console
9	99-7420	1	Plug-Hole
13	119-1651	1	Control-Choke
13:1	3220-3	1	Nut-HJ
17	120-9751	1	Knob-Oval, Black
18	120-6310	1	LCD Display ASM
18:1	120-4630	1	Nut-Display
18:2	120-6311	1	Decal-Display

● Not serviced separately

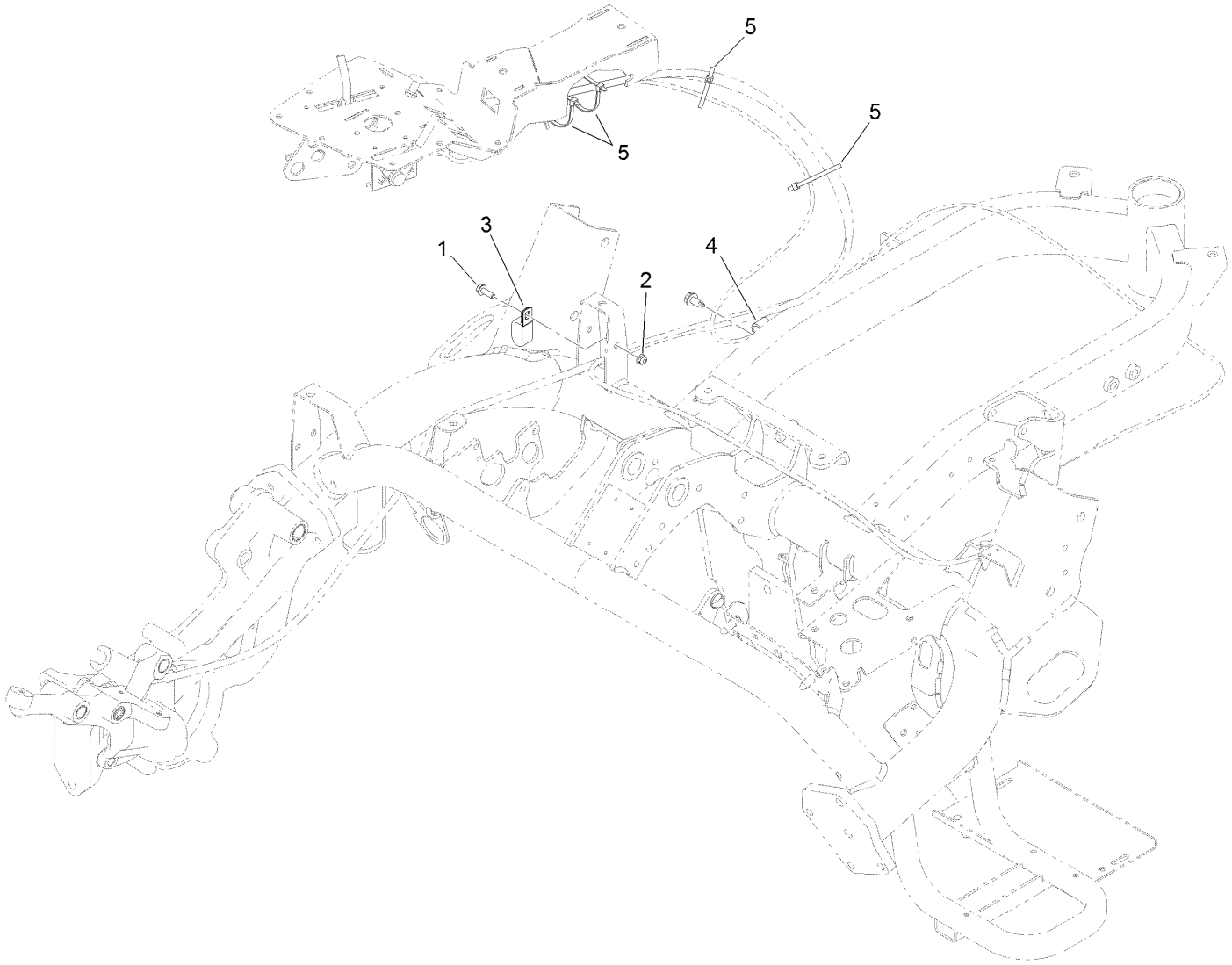

Console Cable Routing Assembly

Ref.	*Part Number*	*Qty.*	*Description*
1	115-5103	1	Screw-HHF
2	104-7201	1	Nut-HF
3	119-8153	1	Clamp-R, Double Tube
4	92-6064	1	Clamp-R
5	3290-379	4	Tie-Cable

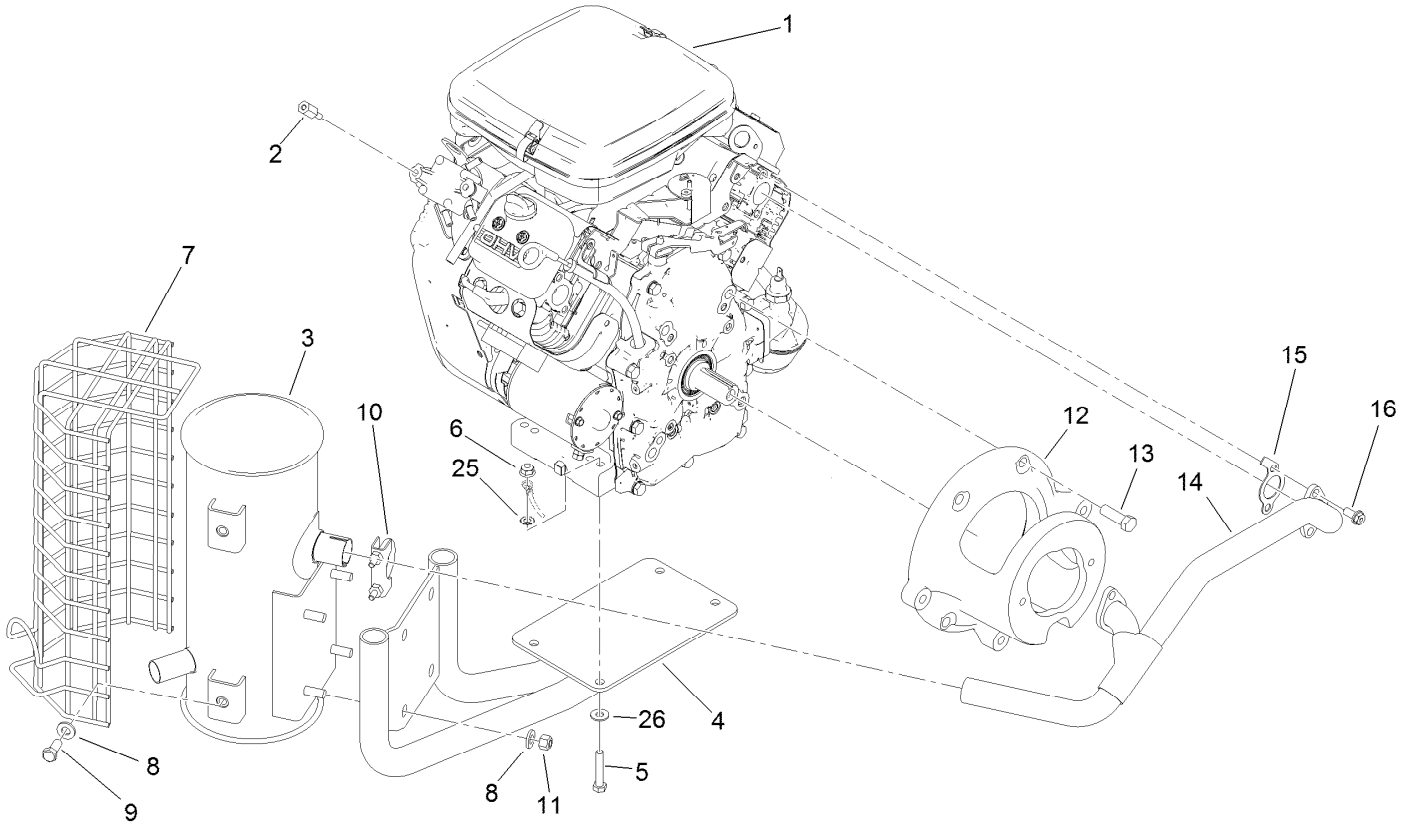

Engine and Exhaust Assembly

Ref.	Part Number	Qty.	Description
1	121-6662	1	Engine-Briggs&stratton, 385447-0208 ■
1:1	107-7817	1	Filter-Oil, Engine ●
2	121-5179	1	Screw-Spacer
3	110-4001	1	Muffler
4	117-4364-03	1	Mount-Muffler
5	322-10	4	Screw-HH
6	104-8300	4	Nut-HF, NI
7	112-0291	1	Shield-Muffler
8	100-4852	8	Washer-Hardened

Ref.	Part Number	Qty.	Description
9	323-5	4	Screw-HH
10	2112-11	1	Clamp-Muffler
11	32152-2	4	Nut-Lock, Cone
12	117-4363-03	1	Mount-Pump
13	324-32	4	Screw-HH
14	117-4379	1	Exhaust Manifold ASM
15	115-8154	2	Gasket-Manifold, Exhaust
16	94-5300	4	Screw-HHF
25	3255-8	1	Washer-Lock
26	87-8640	4	Washer-Flat

● Not illustrated

■ Obtain parts from www.briggsandstratton.com

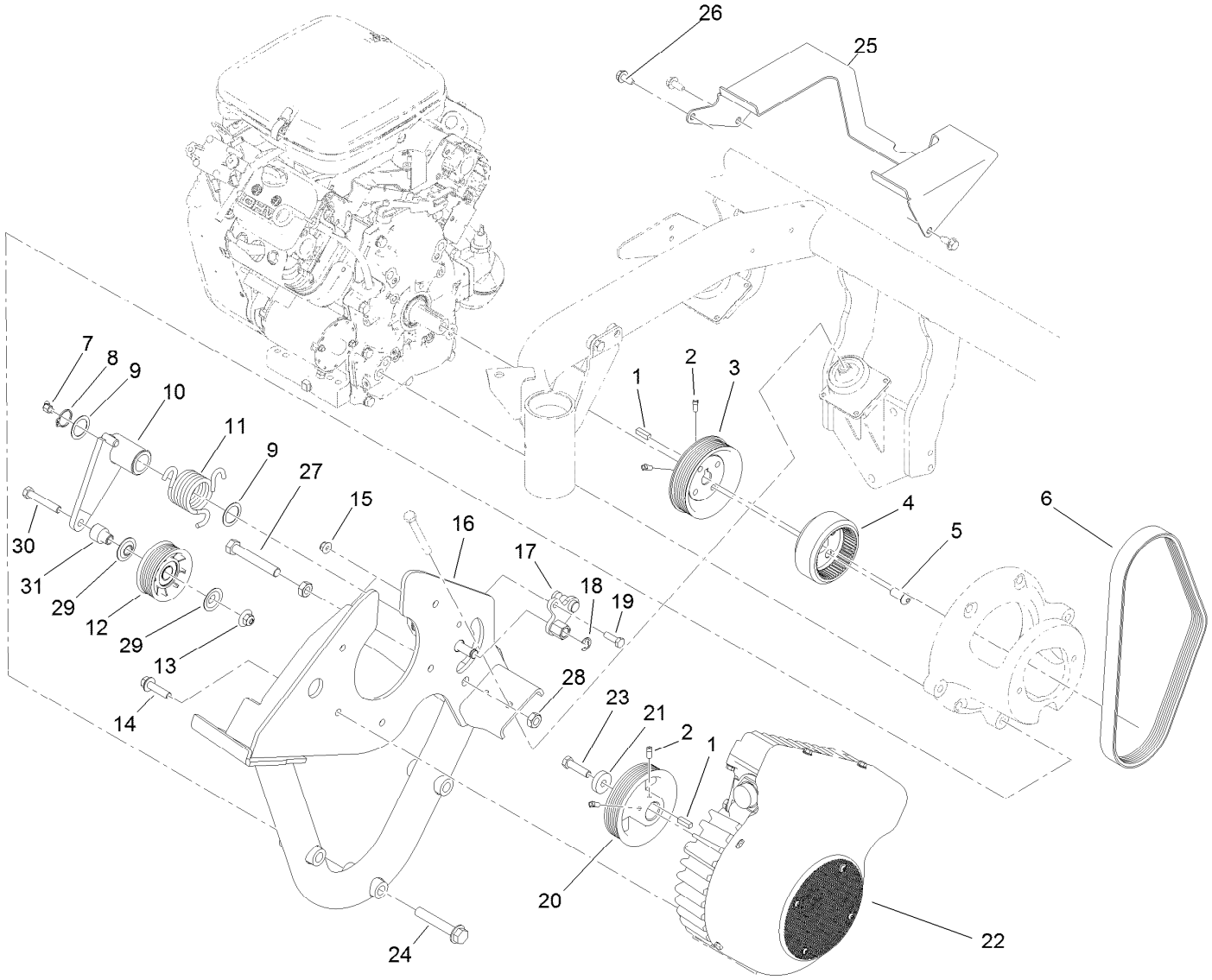

Generator and Engine Frame Assembly

Ref.	Part Number	Qty.	Description
1	10-7070	2	Key-Square
2	3241-7	4	Screw-SQH
3	117-4449	1	Pulley-Engine
4	119-4484	1	Coupling
5	119-8195	4	Screw-HSBH
6	117-4406	1	Belt-V
7	302-11	1	Fitting-Lube, 45 DEG
8	32151-36	1	Ring-Retaining
9	74-1810	2	Washer
10	117-9292	1	Idler Bracket ASM
11	117-9282	1	Spring-Torsion
12	120-5766	1	Pulley ASM
13	109-6658	1	Nut-Flange, NI
14	114-4681	5	Screw-HHF
15	104-8300	1	Nut-HF, NI
16	117-4423-03	1	Frame-Engine

Ref.	Part Number	Qty.	Description
17	117-9289	1	Spring Adjust ASM
18	32120-47	1	Ring-Retaining, External
19	322-5	1	Screw-HH
20	115-9806	1	Pulley-Generator
21	117-3657	1	Spacer
22	117-8185	1	Generator/Controller ASM
23	3211-6	1	Screw-HH
24	3234-40	3	Screw-HF
25	115-8197-03	1	Shield-Belt
26	32104-32	1	Screw-HWH
27	325-13	1	Screw-HH
28	3218-5	2	Nut-Jam
29	120-5757	2	Washer-Flange
30	323-11	1	Screw-HH
31	120-2009	1	Spacer-Pulley, Idler

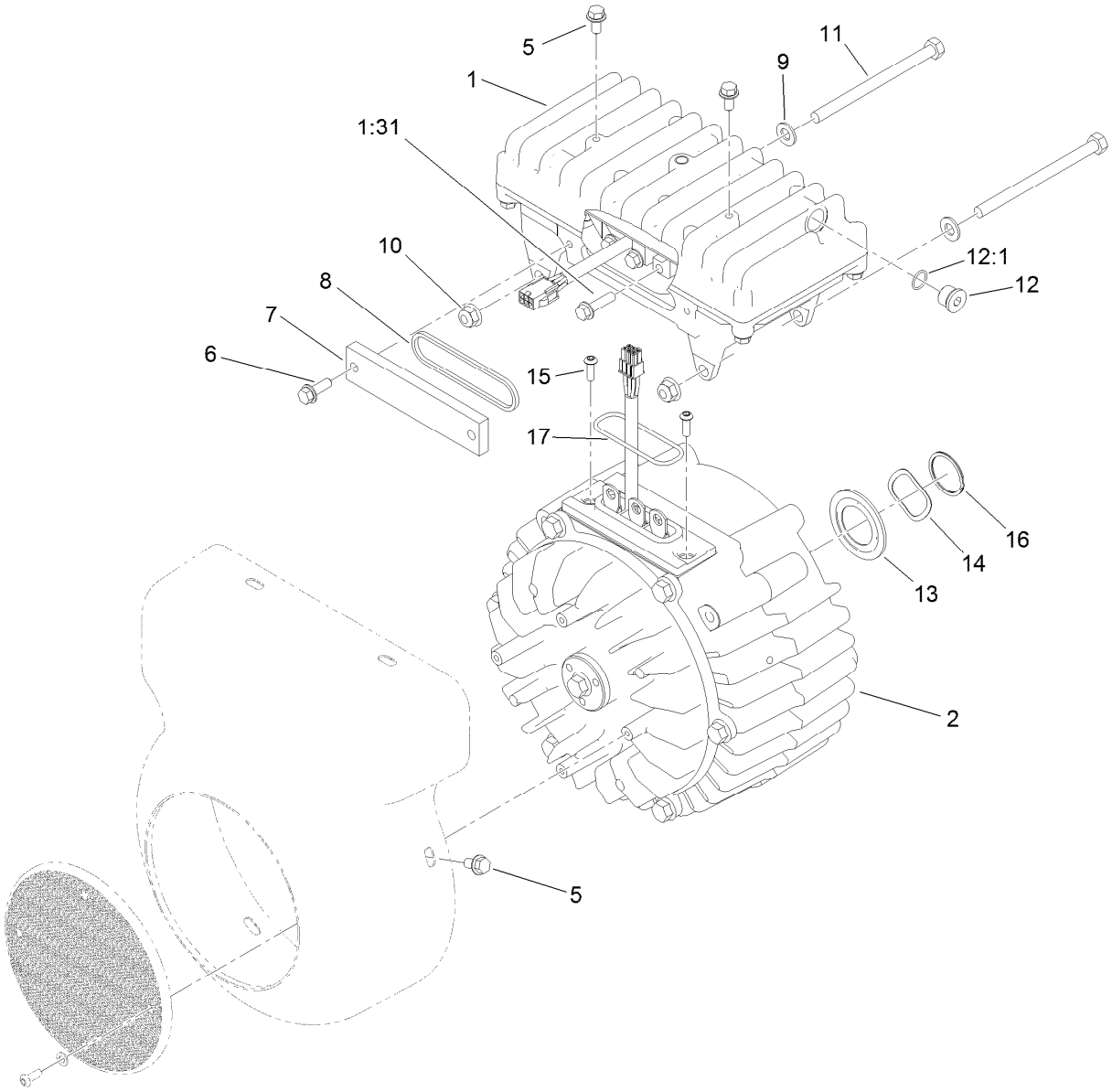

Generator/Controller Assembly No. 117-8185

Ref.	Part Number	Qty.	Description
1	117-8181	1	Controller ASM
1:31	120-4654	3	Screw-HHF
2	117-8182	1	Generator ASM
5	119-1065	6	Screw-HWH
6	119-1138	2	Screw-HWH
7	120-4511	1	Cover-Access
8	120-4513	1	Gasket-Cover, Access
9	3256-23	2	Washer-Plain
10	104-8300	2	Nut-HF, NI

Ref.	Part Number	Qty.	Description
11	322-38	2	Screw-HH
12	353-989	1	Plug-Hex, Hollow
12:1	237-42	1	O-Ring
13	115-3299	1	Seal-Flocked
14	117-8147	1	Washer-Wave
15	119-7568	2	Screw-HSBH
16	112-9607	1	Ring-Retaining, Spiral (EXT)
17	117-8176	1	O-Ring

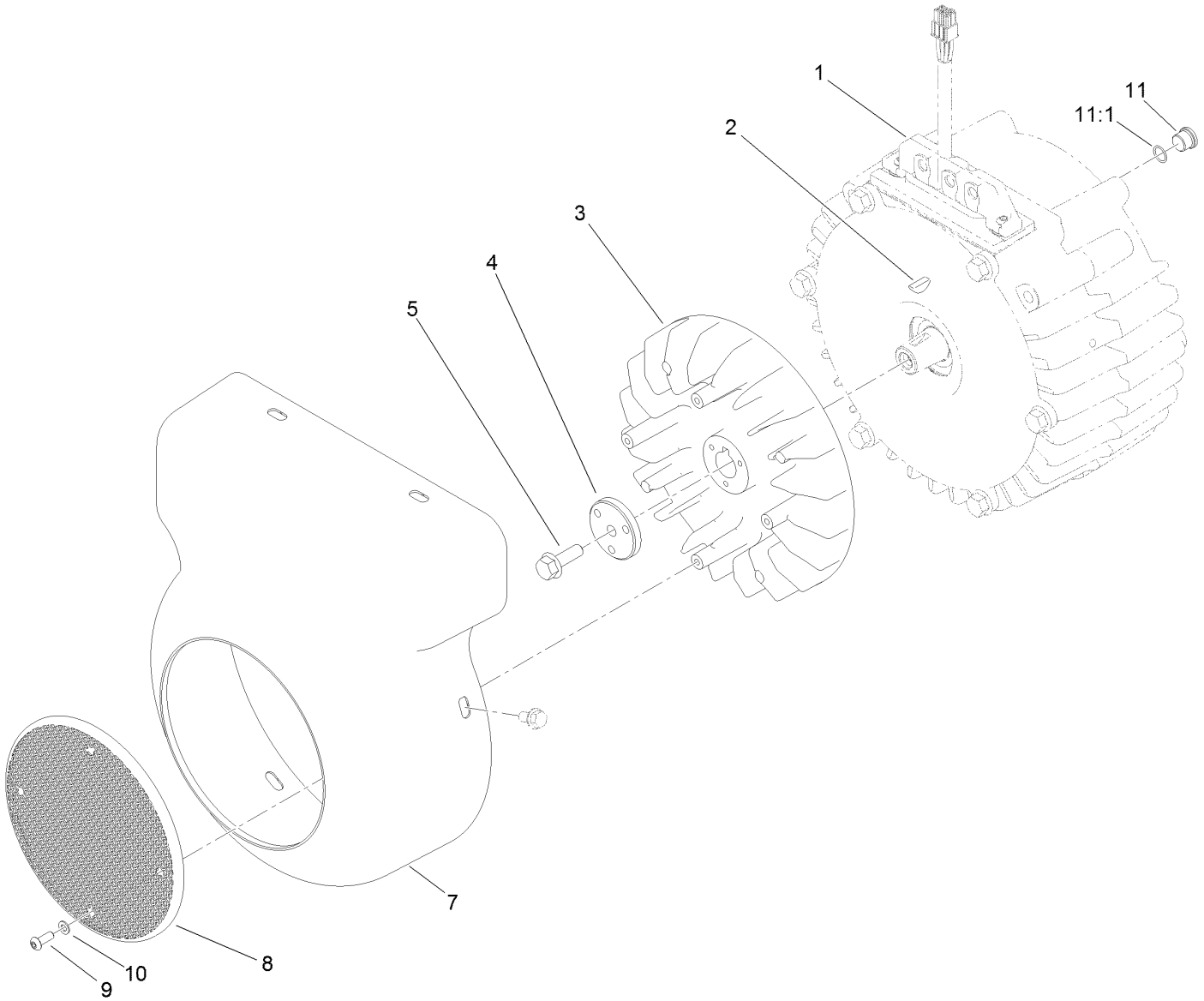

Generator Assembly No. 117-8182

Ref.	*Part Number*	*Qty.*	*Description*
1	119-1069	1	Generator Service ASM
2	112-5193	1	Key-Woodruff
3	117-8184	1	Fan-Generator
4	112-9604	1	Collar
5	33104-025	1	Screw-HHF
7	117-4579	1	Cover-Generator
8	120-4582	1	Screen-Fan
9	120-4564	4	Screw-Bhcs
10	120-4563	4	Washer-Flat
11	353-989	1	Plug-Hex, Hollow
11:1	237-42	1	O-Ring

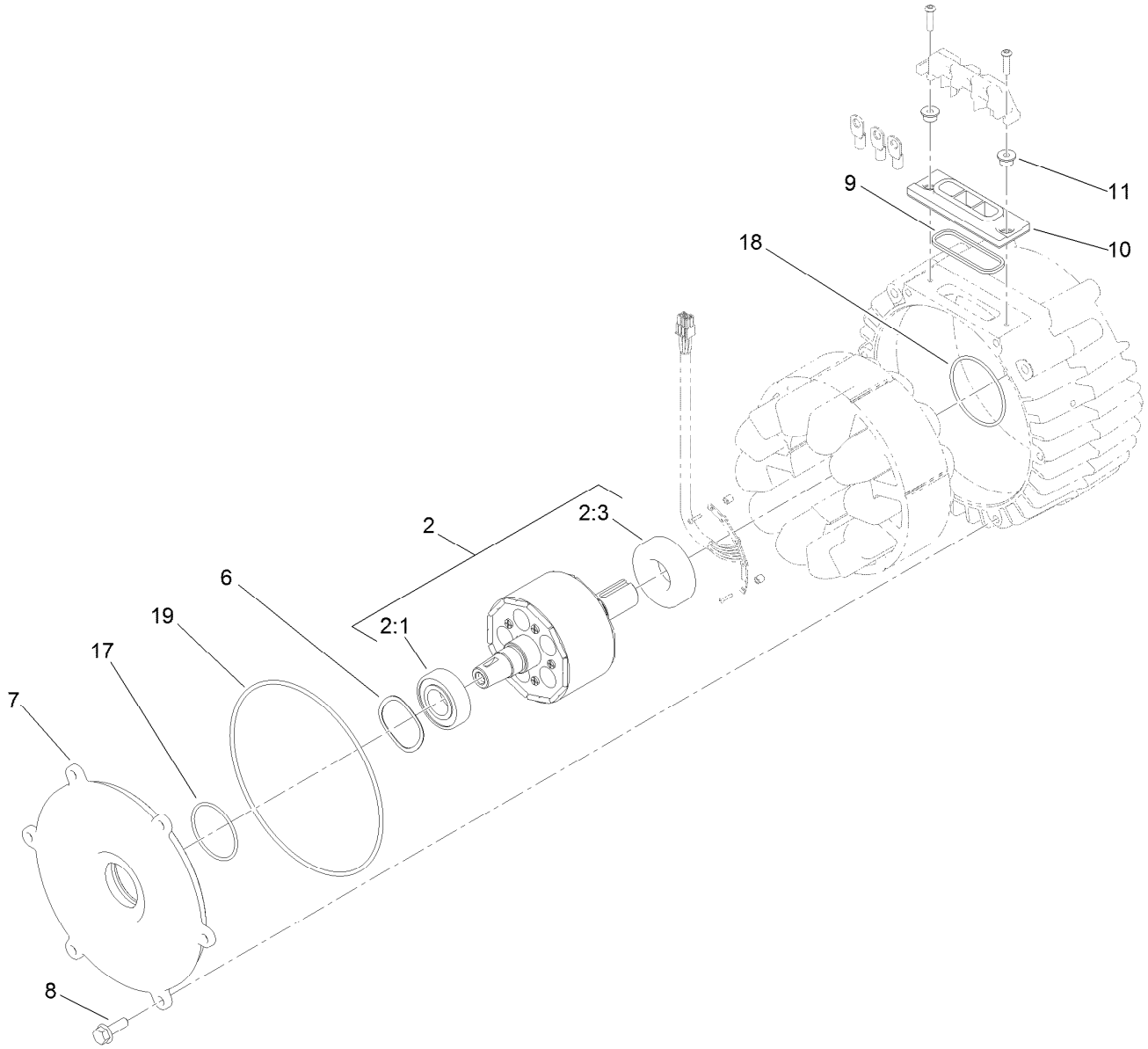

Generator Service Assembly No. 119-1069

Ref.	*Part Number*	*Qty.*	*Description*
2	119-7565	1	Rotor ASM
2:1	120-4621	1	Bearing
2:3	120-4622	1	Bearing
6	117-8148	1	Washer-Wave
7	117-4514	1	Cover-Generator
8	33104-025	6	Screw-HHF
9	120-4518	1	Gasket-Isolator
10	112-5155	1	Isolator-Thermal
11	117-4501	2	Spacer-Shoulder
17	107-3244	1	O-Ring
18	117-8177	1	O-Ring
19	112-5199	1	O-Ring

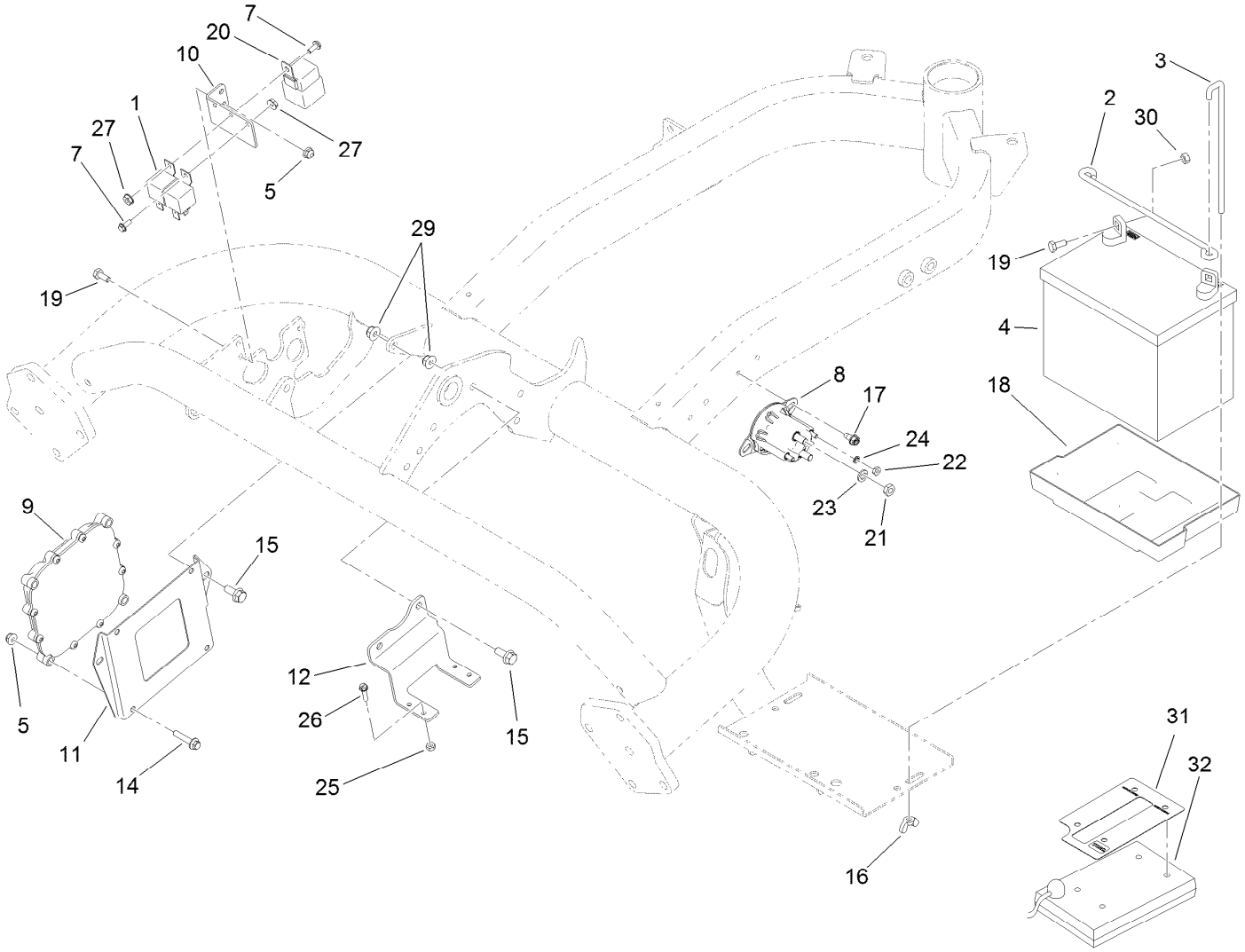

Battery Assembly

Ref.	Part Number	Qty.	Description
1	99-7435	2	Relay-Power
2	100-6434	1	Rod-Hold Down, Battery
3	100-6435	2	Post-Battery
4	104-8162	1	Battery-Dry
5	104-7201	6	Nut-HF
7	112-6349	2	Screw-HWH
8	114-3315	1	Solenoid
9	115-1900	1	Controller
10	119-2097-01	1	Bracket-Relay
11	119-2099-01	1	Plate-Mounting, Controller
12	119-2119-01	1	Bracket-Block, Fuse
14	3234-21	4	Screw-HHF
15	3234-47	4	Screw-HHF
16	32103-22	2	Nut-Wing
17	32104-17	2	Screw-HWH

Ref.	Part Number	Qty.	Description
18	106948	1	Tray-Battery
19	321-3	2	Screw-HH
20	99-7430	1	Relay
21	3220-2	2	Nut-Jam
22	3219-14	2	Nut-Hex
23	3253-4	2	Washer-Lock
24	3254-1	2	Washer-Lock, Int
25	3296-2	4	Nut-Lock, NI
26	32105-13	4	Screw-HWH
27	32149-8	2	Nut-Keps
29	104-8300	4	Nut-HF, NI
30	3217-5	2	Nut-Hex
31	115-8227	1	Decal-Controller
32	85-4750	1	Box-Display, Diagnostic

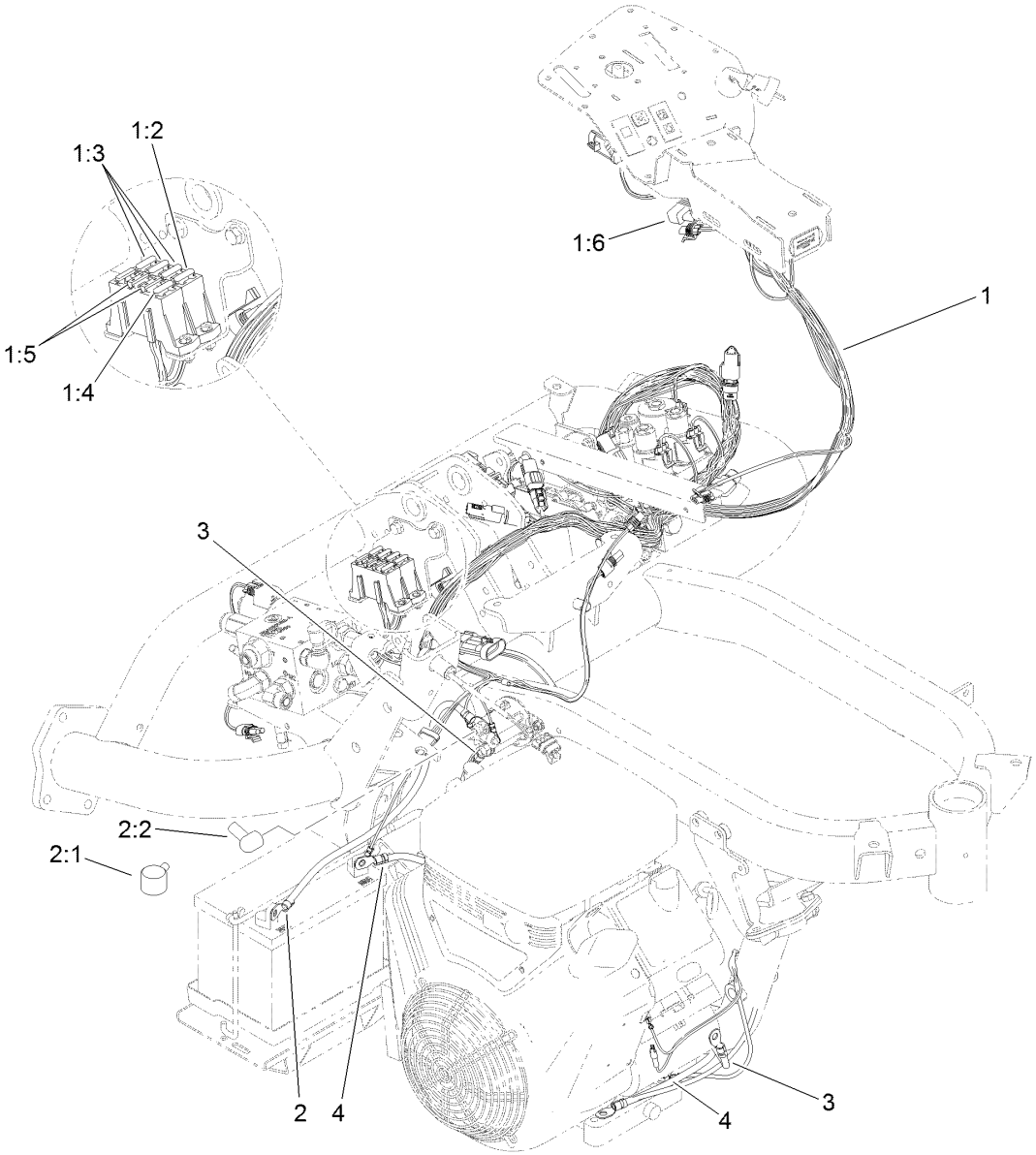

Wire Harness Assembly

Ref.	Part Number	Qty.	Description
1	120-3993	1	Harness-Wire
1:2	94-6710	1	Fuse-2 Amp
1:3	114241	3	Fuse-Blade, 7.5 Amp
1:4	218-578	1	Fuse-Blade, 10 Amp
1:5	109355	2	Fuse-Blade, 15 Amp
1:6	104-4022	1	Resistor-75 Ohm
2	109-7653	1	Positive Battery Cable ASM
2:1	109-2407	1	Insulator-Battery
2:2	1-543393	1	Insulator-Solenoid
3	119-1781	1	Cable-Battery, Positive
4	114-9748	1	Cable-Battery, Negative

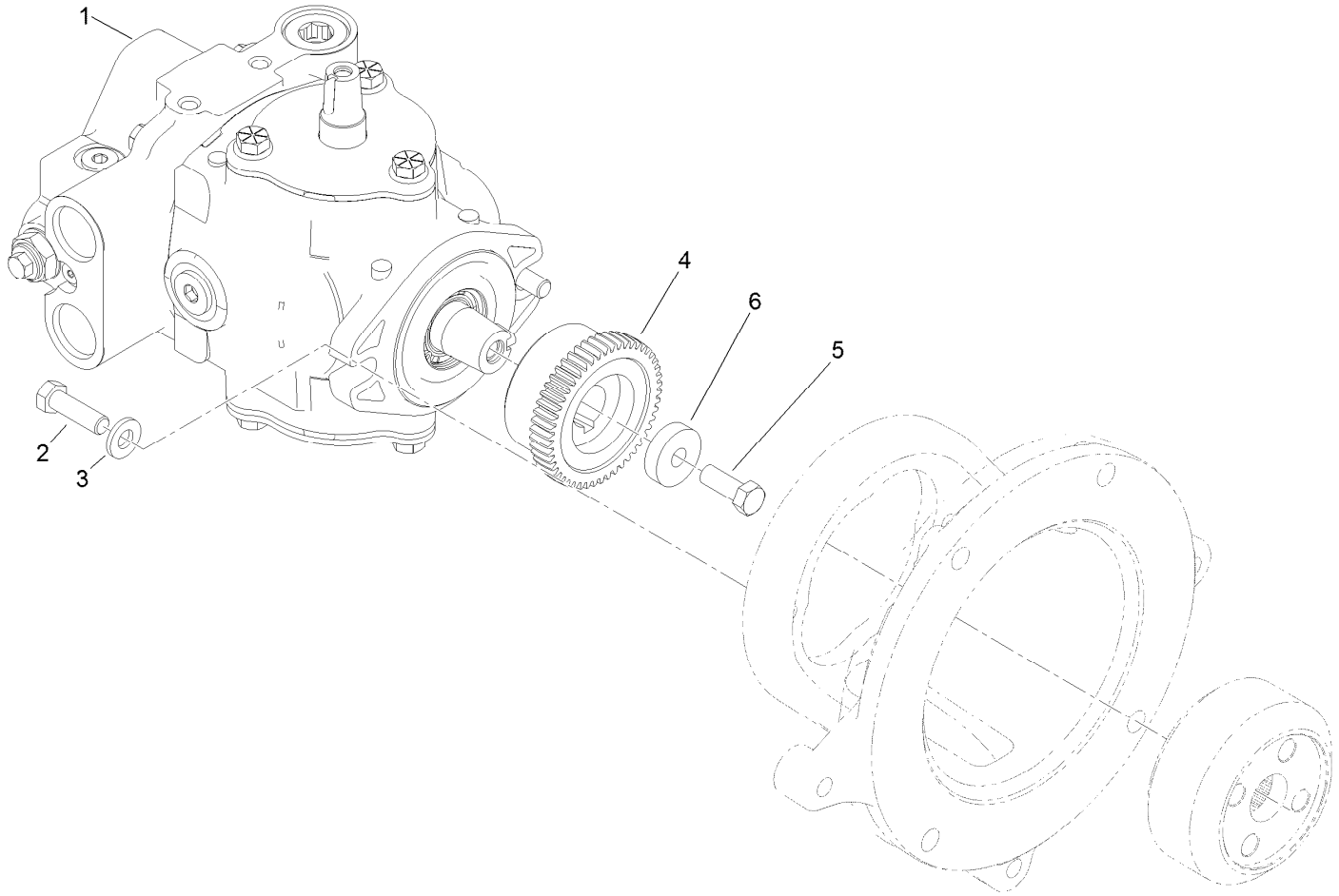

Pump Coupling Assembly

Ref.	Part Number	Qty.	Description
1	114-9957	1	HYD Pump ASM
2	323-7	2	Screw-HH
3	100-4852	2	Washer-Hardened
4	119-4418	1	Coupling
5	3211-4	1	Screw-HH
6	117-3657	1	Spacer

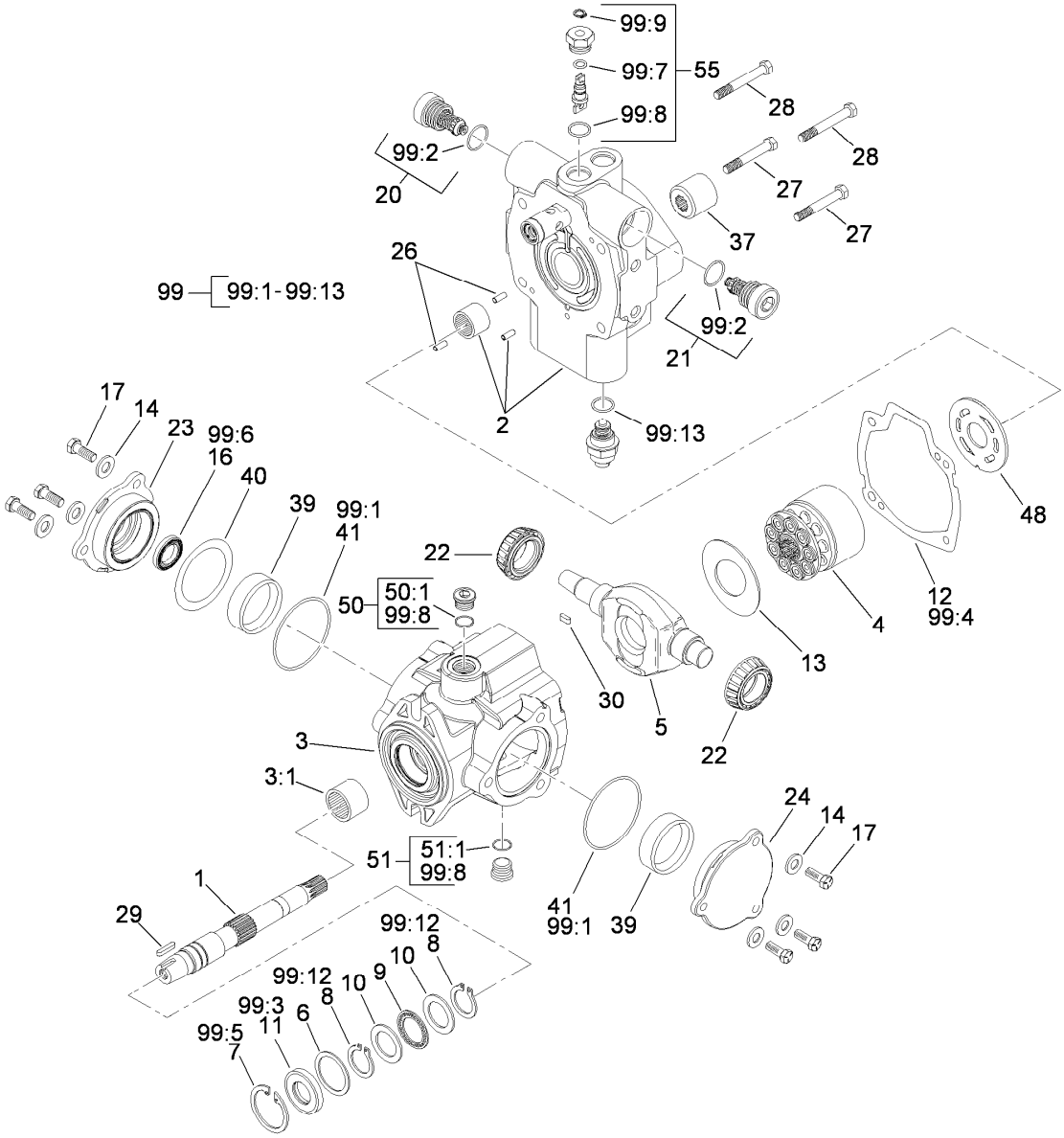

Hydraulic Pump Assembly No. 114-9957

Ref.	Part Number	Qty.	Description
1	119-7148	1	Shaft-Drive, Tapered
2	119-7149	1	Endcover ASM
3	100-3176	1	Housing ASM
3:1	94-6363	1	Bearing
4	76-6070	1	Rotating Kit
5	104-4888	1	Swashplate
6	33-3720	1	Washer
7	32151-13	1	Ring-Retaining
8	32151-29	2	Ring-Retaining
9	252-66	1	Bearing-Thrust
10	252-71	2	Washer-Thrust
11	104-4861	1	Seal-Shaft
12	33-4930	1	Gasket-Housing
13	98-4635	1	Insert-Plate, Cam
14	105-9762	6	Washer
16	76-6190	1	Seal-Shaft
17	98-4640	6	Screw-Cap
20	120-1989	1	Relief Valve ASM

Ref.	Part Number	Qty.	Description
21	120-1989	1	Relief Valve ASM
22	98-4639	2	Bearing-Cone
23	98-4645	1	Plate-Cover
24	98-4644	1	Plate-Cover
26	76-6150	2	Pin-Dowel
27	76-6160	2	Capscrew
28	76-6170	2	Capscrew
29	120-5751	1	Key
30	94-3646	1	Key
37	74-9040	1	Coupler
39	104-4046	2	Bearing-Cup
40	100-3182	1	Shim Kit
41	100-3179	2	O-Ring
48	100-3180	1	Plate-Valve
50	74-9280	1	Plug ASM
50:1		1	O-Ring ■
51	74-9280	1	Plug ASM
51:1		1	O-Ring ■

● Not illustrated

■ Not serviced separately

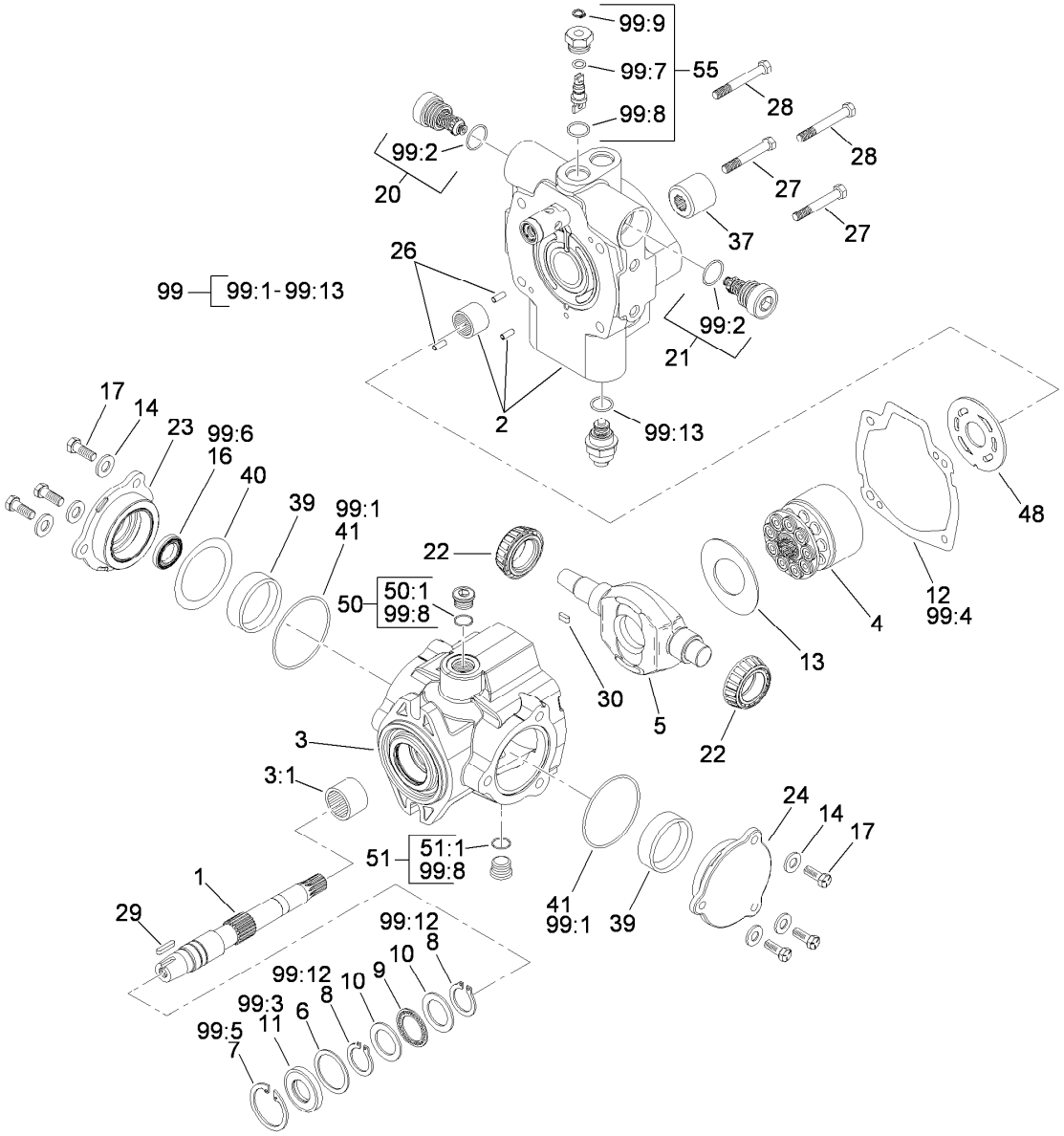

Hydraulic Pump Assembly No. 114-9957 (continued)

Ref.	Part Number	Qty.	Description
55	105-3811	1	Valve-Bypass
99	120-5754	1	Seal Kit
99:1		2	O-Ring ■
99:2		2	O-Ring ■
99:3		1	Seal-Shaft ■
99:4		1	Gasket ■
99:5		1	Ring-Retaining ■
99:6		1	Seal-Shaft ■
99:7		1	O-Ring ■
99:8		5	O-Ring ■
99:9		1	Ring-Retaining ■
99:10		1	O-Ring (Not Used For This Configuration) ● ■
99:11		1	O Ring-Molded (Not Used For This Configuration) ● ■
99:12		2	Ring-Retaining ■
99:13		1	O-Ring ■

● Not illustrated

■ Not serviced separately

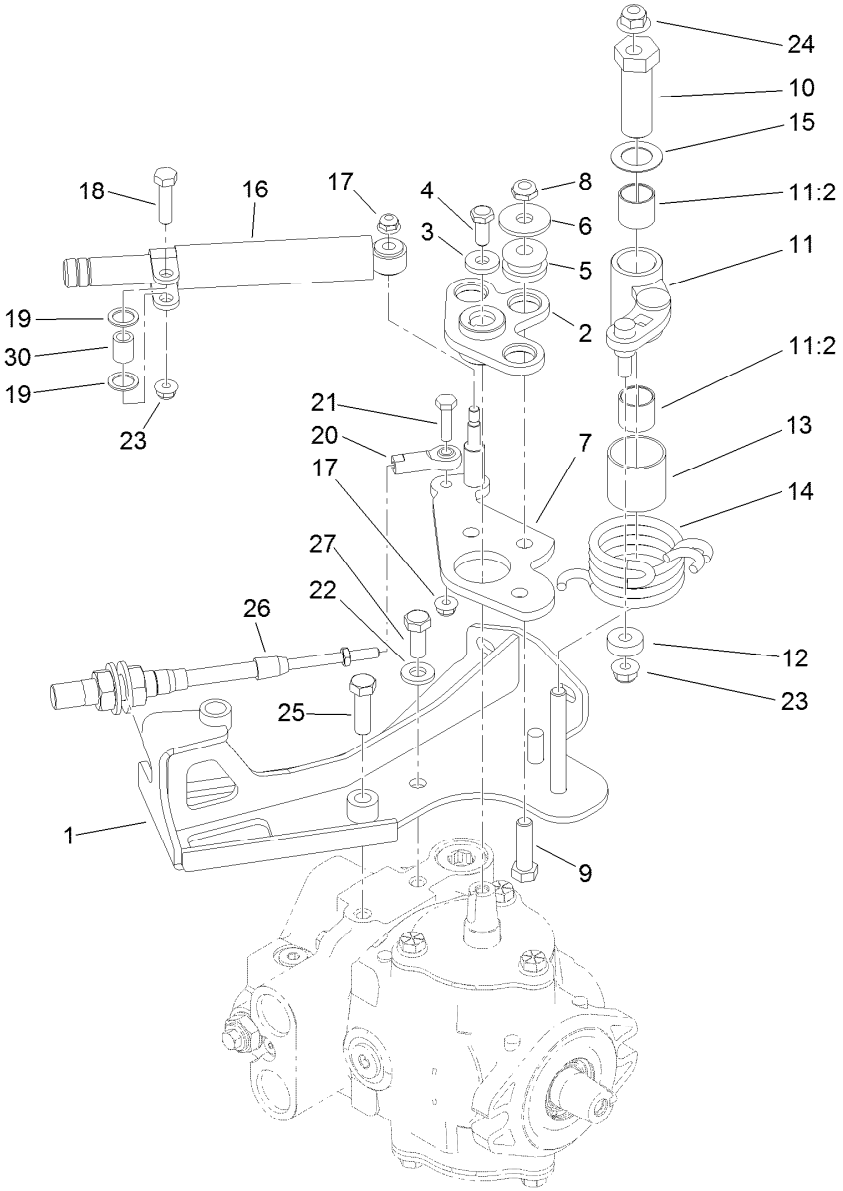

Neutral Centering Assembly

Ref.	Part Number	Qty.	Description
1	120-2017	1	Support-Cable
2	117-4466	1	Plate ASM
3	88-7200	1	Washer-Flat
4	3235-6	1	Screw-HH
5	63-9750	3	Mount
6	93-8806	3	Washer-Hardened
7	117-9061	1	Lever-Pump
8	3296-59	3	Nut-Lock, NI
9	323-29	3	Screw-HH
10	117-9046	1	Stud-Eccentric
11	117-9053	1	Neutral Arm ASM
11:2	94-9609	2	Bushing-Straight
12	251-259	1	Bearing-Ball
13	115-8158	1	Spacer-Spring
14	117-9047	1	Spring-Torsion

Ref.	Part Number	Qty.	Description
15	119-8199	1	Washer-Nylon
16	76-8870	1	Damper-Lever
17	104-7201	2	Nut-HF
18	322-6	1	Screw-HH
19	94-8196	2	Washer-Nylon
20	2411-41	1	Rod End-Ball Joint
21	321-6	1	Screw-HH
22	100-4852	1	Washer-Hardened
23	104-8300	2	Nut-HF, NI
24	104-8301	1	Nut-HF, NI
25	323-7	1	Screw-HH
26	119-1735	1	Cable-Control, Traction
27	323-5	1	Screw-HH
30	94-8197	1	Tube-Pivot

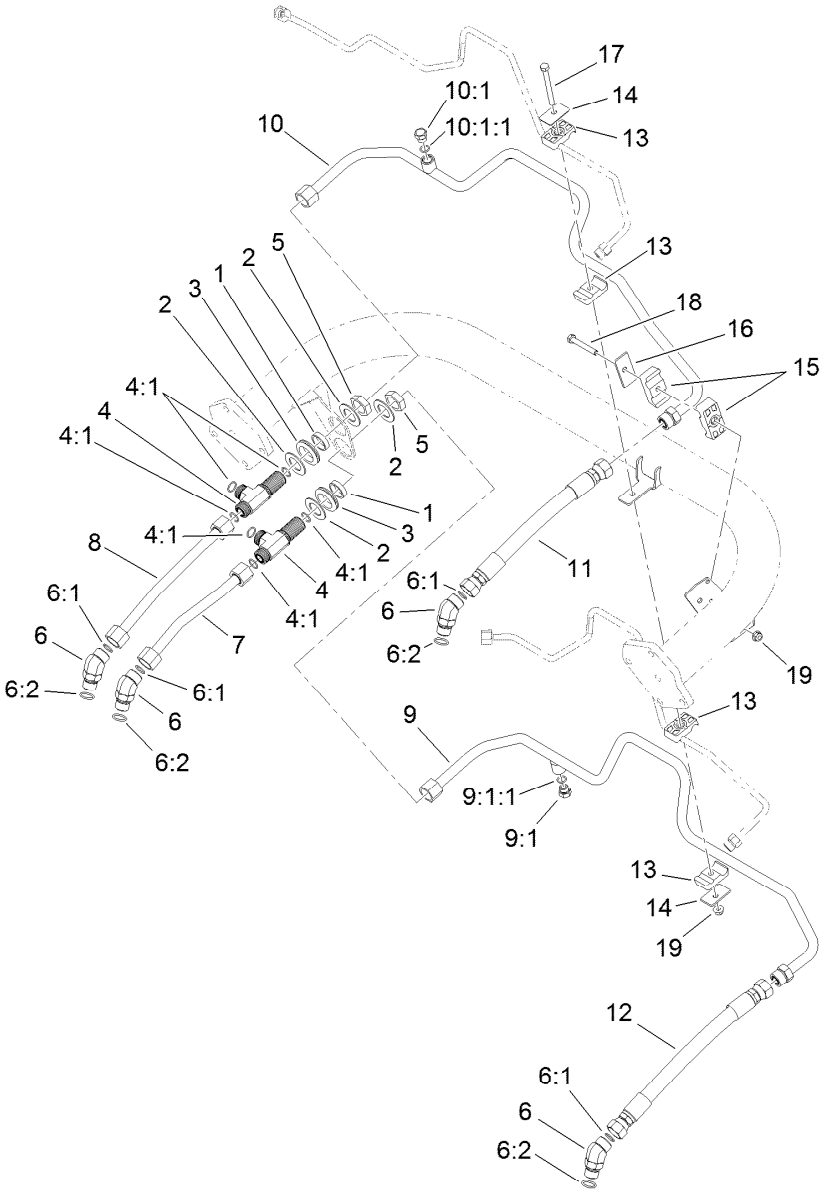

Traction Drive Hydraulic Line Assembly

Ref.	Part Number	Qty.	Description
1	69-9000	2	Spacer
2	69-9010	4	Washer
3	240-3	2	Grommet-Rubber
4	94-5350	2	Tee-Bulkhead
4:1	237-65	3	O-Ring
5	340-74	2	Nut-Lock, Bulkhead
6	340-14	4	Fitting-HYD-45
6:1	237-65	1	O-Ring
6:2	237-80	1	O-Ring
7	119-2057	1	HYD Tube ASM
8	119-2058	1	HYD Tube ASM
9	119-2063	1	HYD Tube ASM
9:1	353-508	1	Plug-HH

Ref.	Part Number	Qty.	Description
9:1:1	237-42	1	O-Ring
10	119-2064	1	HYD Tube ASM
10:1	353-508	1	Plug-HH
10:1:1	237-42	1	O-Ring
11	115-9484	1	HYD Hose ASM
12	115-9485	1	HYD Hose ASM
13	56-7970	4	Clamp-Tube
14	69-9760	2	Coverplate
15	119-8173	2	Clamp-Tube
16	69-9761	1	Plate-Cover
17	322-20	1	Screw-HH
18	322-12	1	Screw-HH
19	104-8300	2	Nut-HF, NI

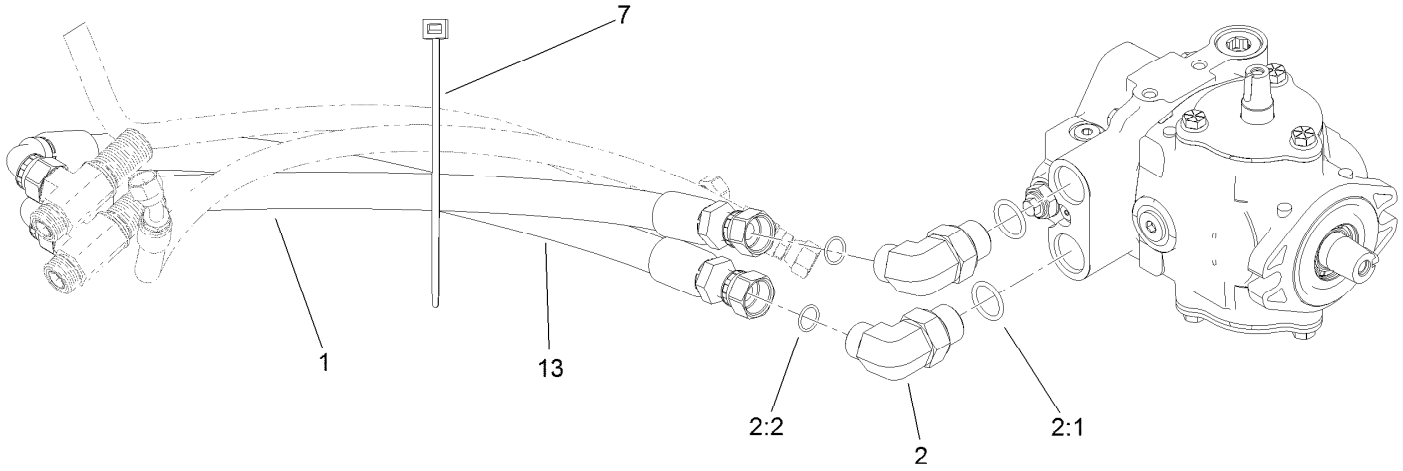

Traction Drive Hose Routing Assembly

Ref.	*Part Number*	*Qty.*	*Description*
1	119-2060	1	HYD Hose ASM
2	340-139	2	Fitting-Elbow 90
2:1	237-81	1	O-Ring
2:2	237-65	1	O-Ring
7	3290-378	1	Tie-Cable
13	120-1988	1	HYD Hose ASM

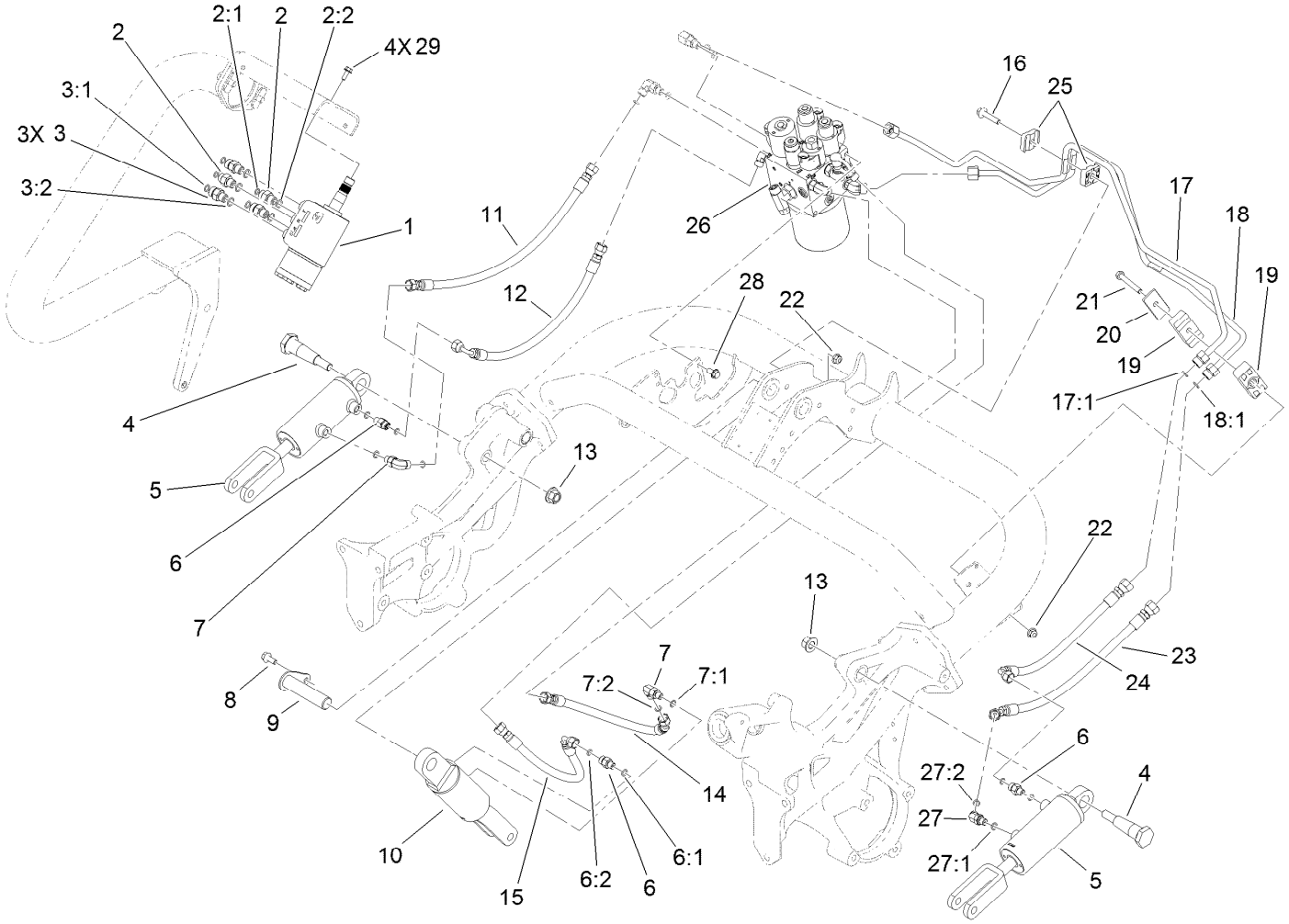

Lift Circuit Assembly

Ref.	Part Number	Qty.	Description
1	114-4672	1	Steering Valve ASM
2	340-1	2	Fitting-Straight
2:1	237-21	1	O-Ring
2:2	237-42	1	O-Ring
3	340-2	3	Fitting-Straight
3:1	237-22	1	O-Ring
3:2	237-42	1	O-Ring
4	112-5709	2	Pin-Tapered
5	119-8129	2	No. 2 And 3 HYD Cylinder ASM
6	340-92	3	Fitting-Straight
6:1	237-78	1	O-Ring
6:2	237-21	1	O-Ring
7	340-132	2	Fitting-90 DEG
7:1	237-78	1	O-Ring
7:2	237-21	1	O-Ring
8	3234-47	1	Screw-HHF
9	119-8104	1	Pin ASM

Ref.	Part Number	Qty.	Description
10	119-8128	1	No. 1 HYD Cylinder ASM
11	119-2052	1	HYD Hose ASM
12	119-2053	1	HYD Hose ASM
13	99-5107	2	Nut-Lock
14	119-2051	1	HYD Hose ASM
15	119-2050	1	HYD Hose ASM
16	115-1794	1	Screw-HHF
17	119-8126	1	HYD Tube ASM
17:1	237-22	1	O-Ring
18	119-8127	1	HYD Tube ASM
18:1	237-22	1	O-Ring
19	120-3200	2	Clamp-Tube
20	69-9761	1	Plate-Cover
21	322-12	1	Screw-HH
22	104-8300	3	Nut-HF, NI
23	119-2066	1	HYD Hose ASM
24	119-2065	1	Hose-HYD
25	56-7973	2	Clamp-Tube

● Not serviced separately

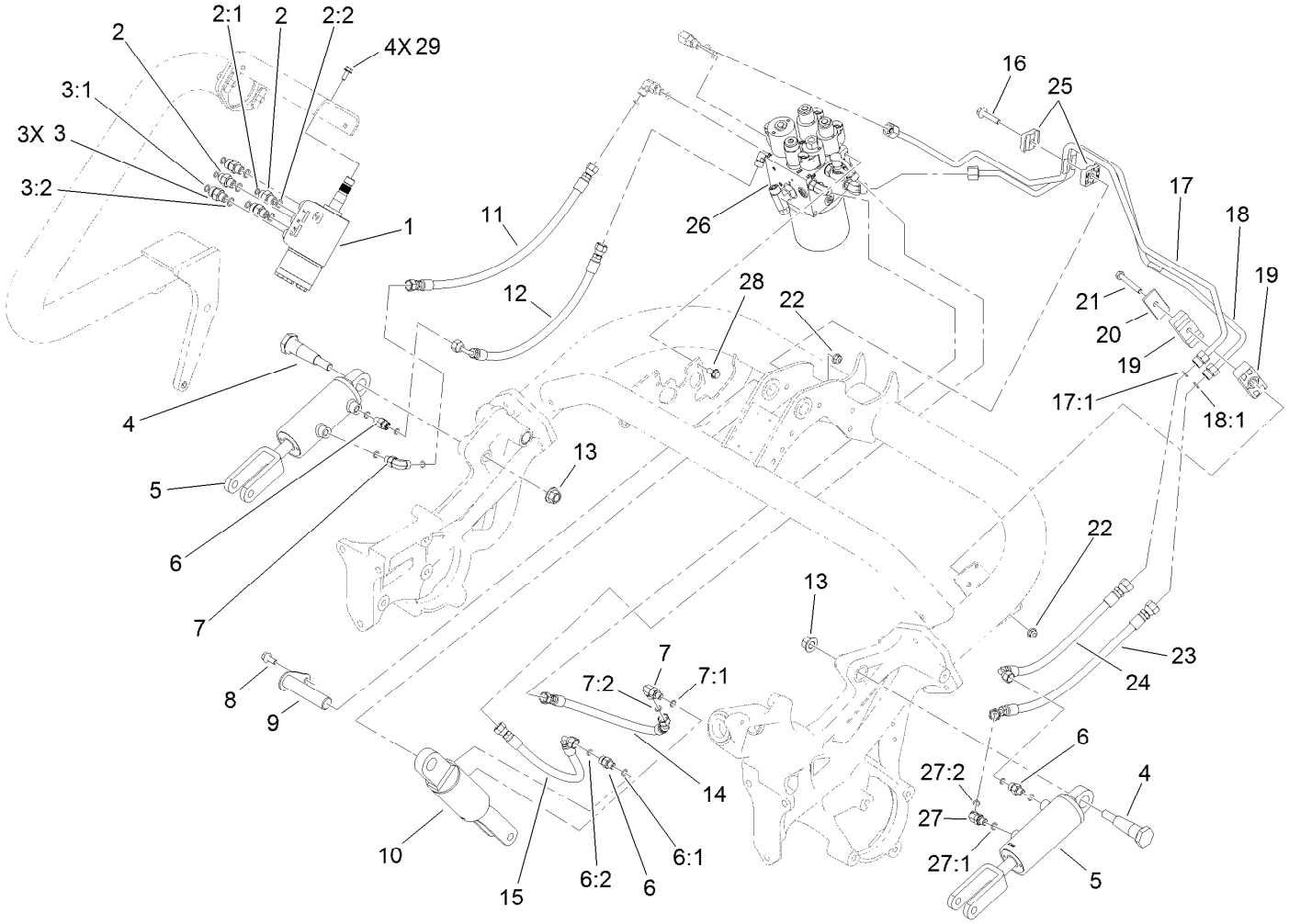

Lift Circuit Assembly (continued)

Ref.	Part Number	Qty.	Description
26		1	Hydraulic Lift Manifold ASM ●
27	340-103	1	Fitting-HYD, 45 DEG
27:1	237-78	1	O-Ring
27:2	237-21	1	O-Ring
28	3234-7	2	Screw-HHF
29	33103-016	4	Screw-HHF

● Not serviced separately

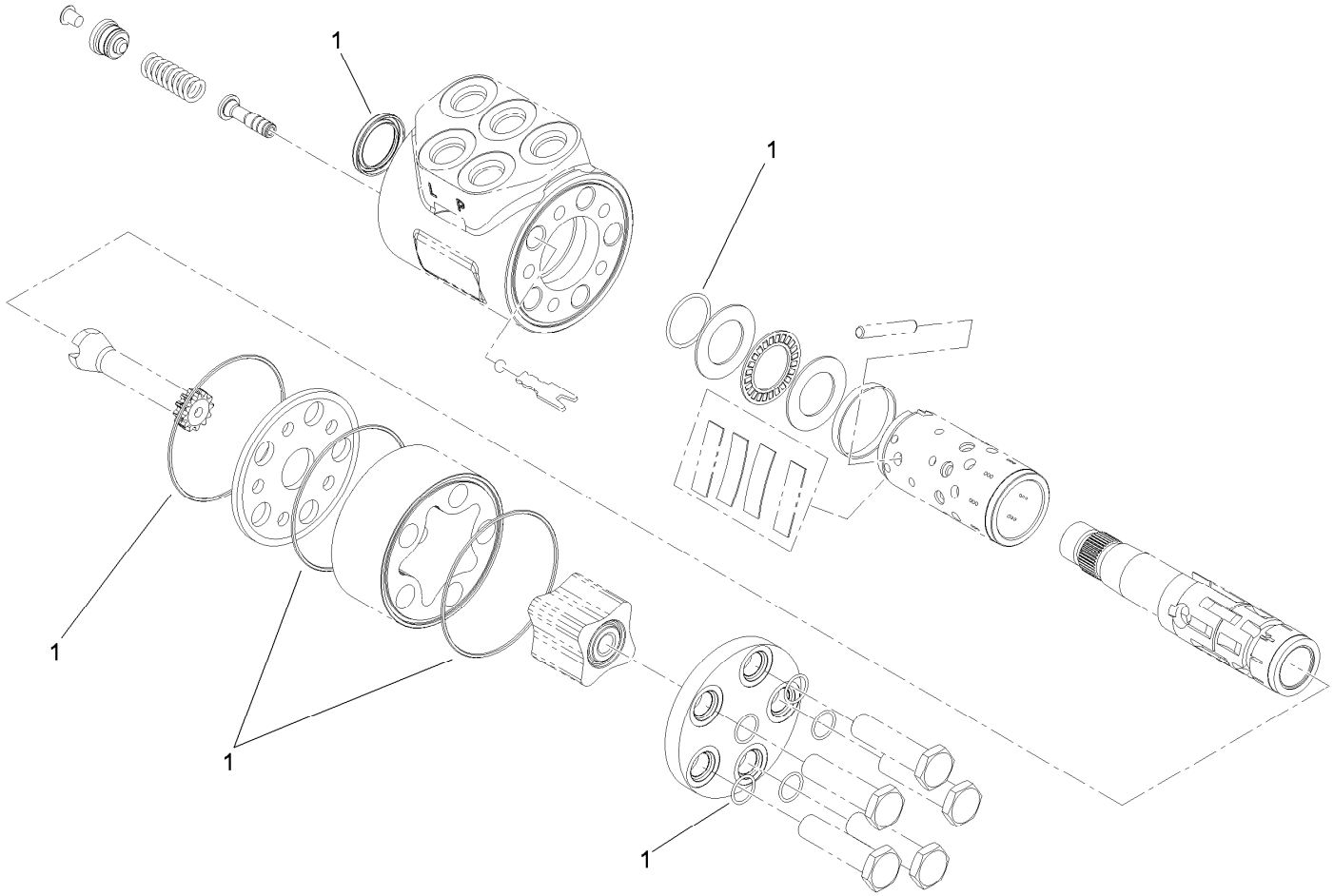

Steering Valve Assembly No. 114-4672

Ref.	*Part Number*	*Qty.*	*Description*
1	106-6716	1	Seal Kit

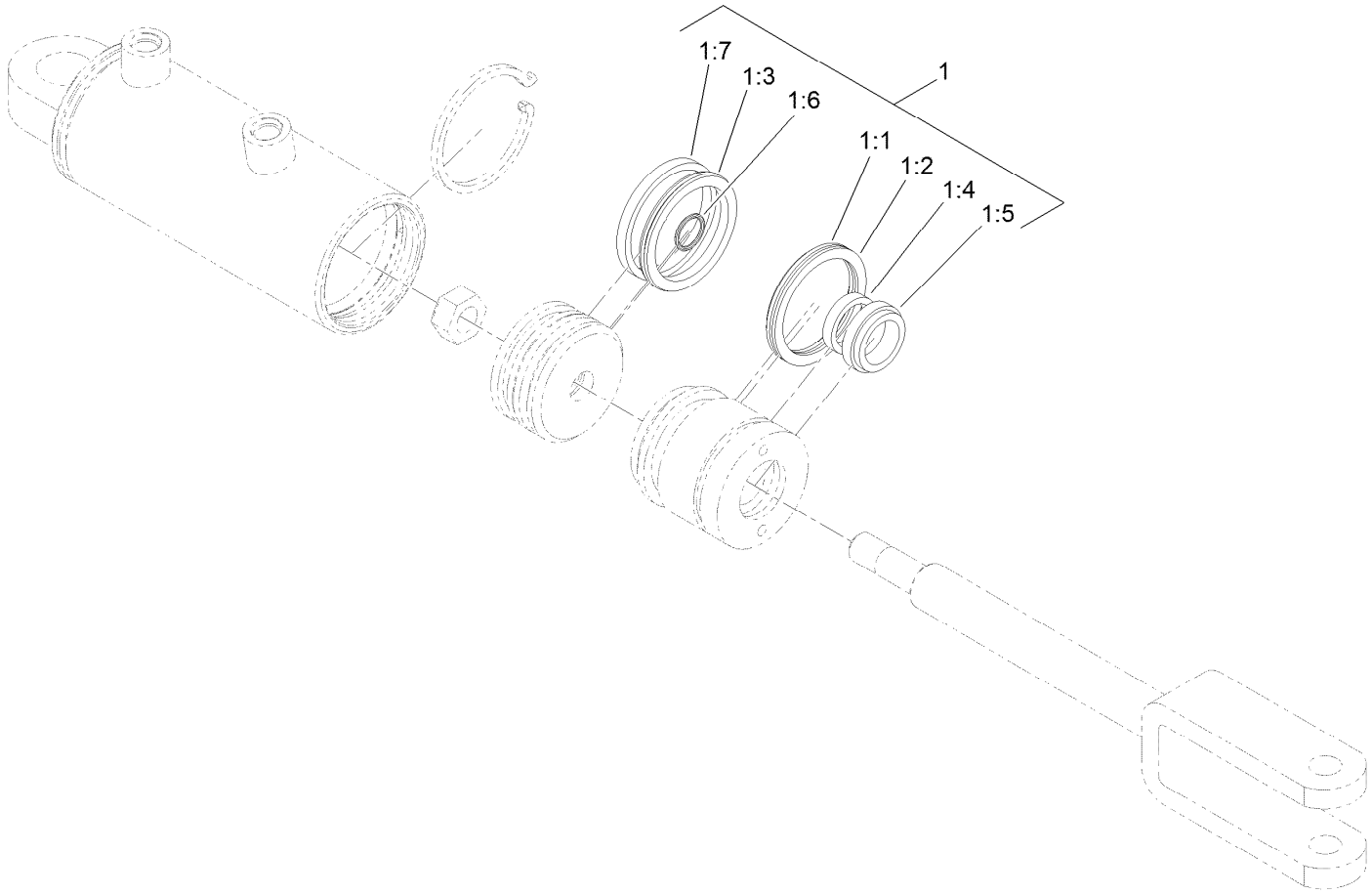

Hydraulic Cylinder Assembly No. 119-8129

Ref.	*Part Number*	*Qty.*	*Description*
1	115-3410	1	Seal Kit
1:1		1	O-Ring ●
1:2		1	Backup ●
1:3		1	Bp Seal ●
1:4		1	Bs Seal ●
1:5		1	Seal-Dust ●
1:6		1	O-Ring ●
1:7		1	Ring-Wear ●

● Not serviced separately

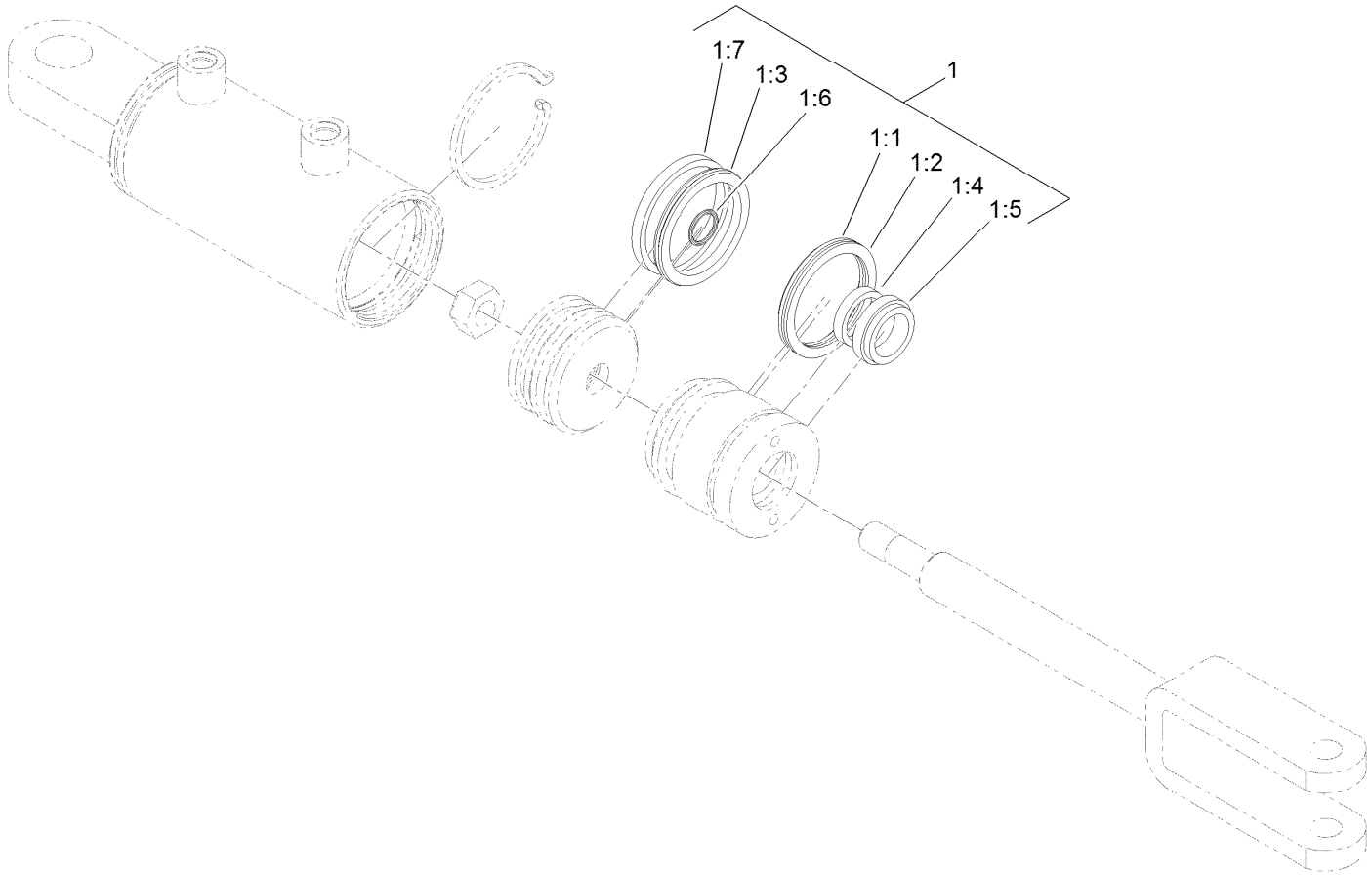

Hydraulic Cylinder Assembly No. 119-8128

Ref.	*Part Number*	*Qty.*	*Description*
1	115-3410	1	Seal Kit
1:1		1	O-Ring ●
1:2		1	Backup ●
1:3		1	Bp Seal ●
1:4		1	Bs Seal ●
1:5		1	Seal-Dust ●
1:6		1	O-Ring ●
1:7		1	Ring-Wear ●

● Not serviced separately

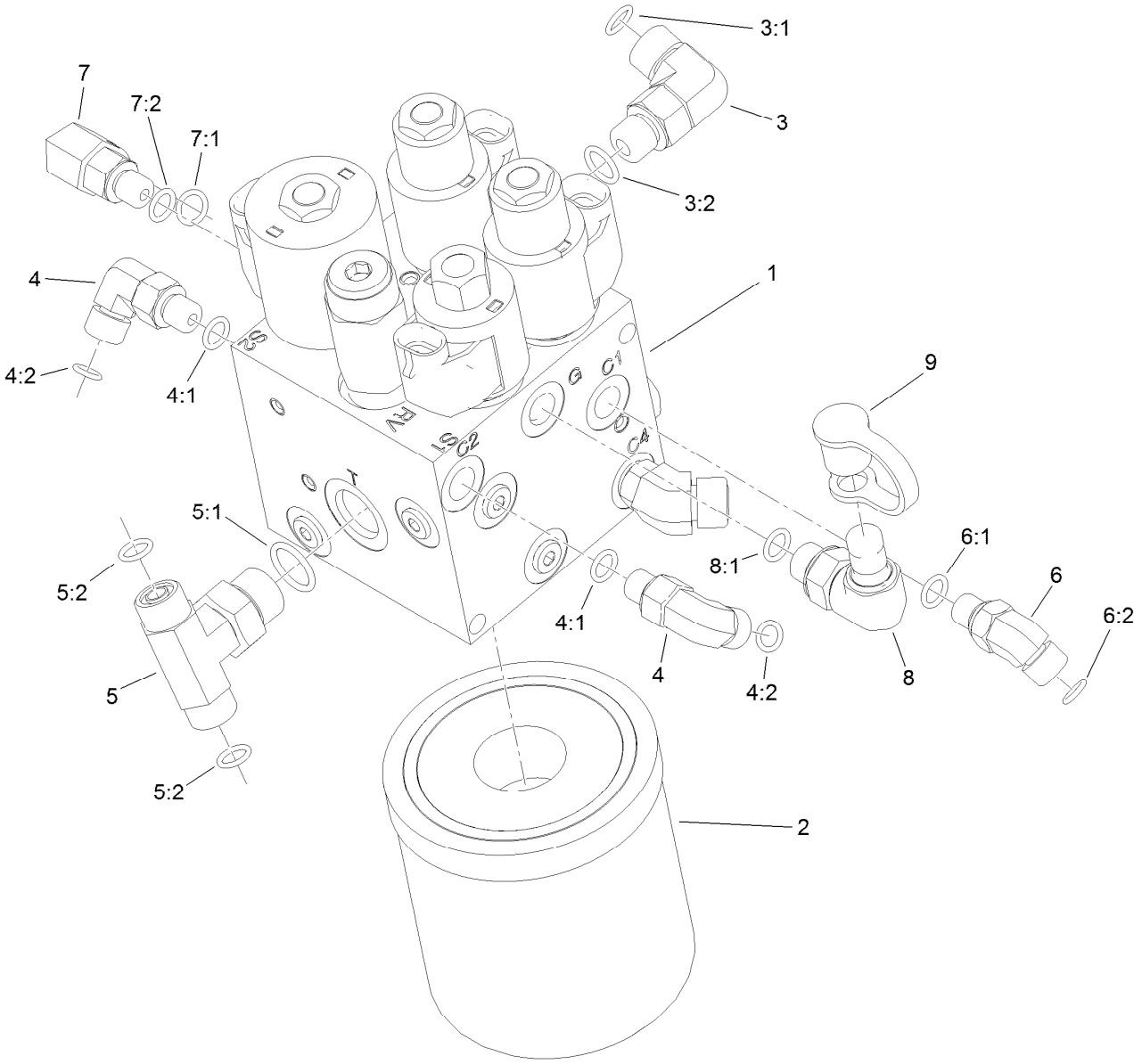

Hydraulic Lift Manifold Assembly

Ref.	Part Number	Qty.	Description
1	117-9856	1	Manifold-Lift, HYD
2	108-5194	1	Filter-Oil, HYD
3	340-77	1	Fitting-Elbow-90
3:1	237-22	1	O-Ring
3:2	237-42	1	O-Ring
4	340-132	2	Fitting-90 DEG
4:1	237-78	1	O-Ring
4:2	237-21	1	O-Ring
5	92-4799	1	Fitting-Tee, HYD
5:1	237-79	1	O-Ring

Ref.	Part Number	Qty.	Description
5:2	237-22	2	O-Ring
6	340-103	1	Fitting-HYD, 45 DEG
6:1	237-78	1	O-Ring
6:2	237-21	1	O-Ring
7	340-97	1	Fitting-Elbow 90
7:1	237-22	1	O-Ring
7:2	237-78	1	O-Ring
8	115-9147	1	Fitting-Elbow, 90 DEG
8:1	237-78	1	O-Ring
9	354-79	1	Cap-Dust

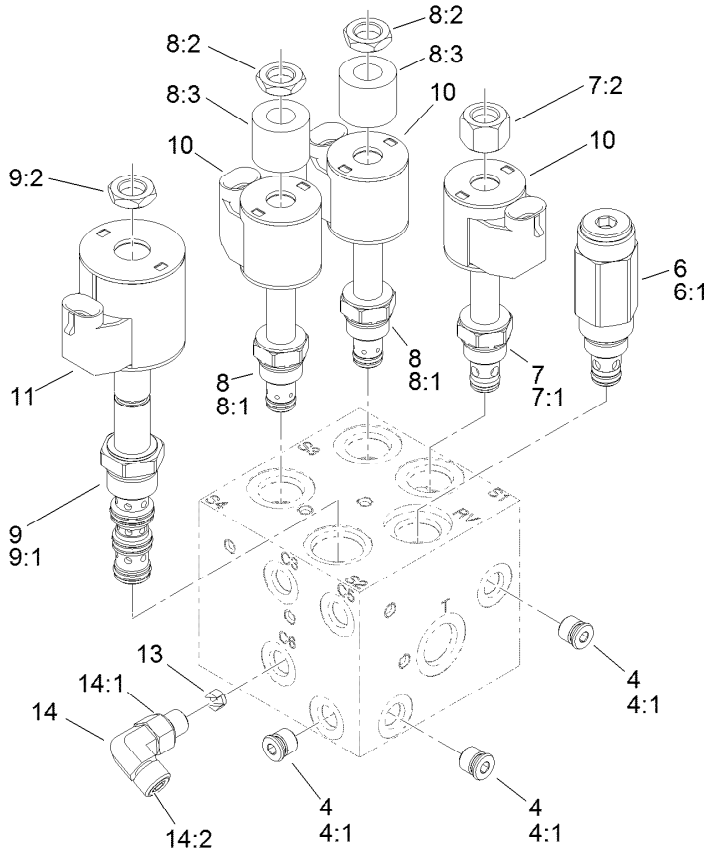

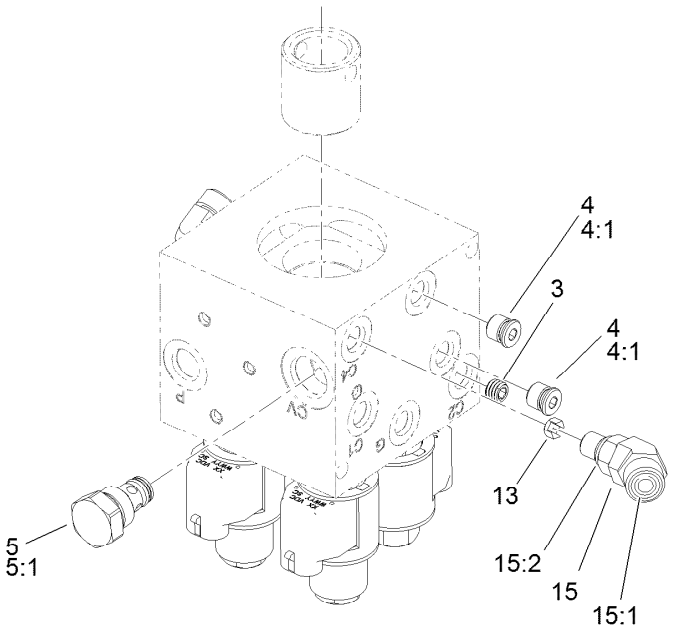

Hydraulic Lift Manifold Assembly No. 117-9856

Ref.	Part Number	Qty.	Description
3	119-7144	1	Orifice (.037 Inch)
4	353-990	5	Plug ASM
4:1	237-78	1	O-Ring
5	107-7524	1	Check Valve ASM
5:1	105-9156	1	Seal Kit
6	112-9207	1	Valve-Relief
6:1	105-9156	1	Seal Kit
7	107-7517	1	Valve-Solenoid
7:1	105-9156	1	Seal Kit
7:2	107-7812	1	Nut-Solenoid
8	110-8898	2	Valve-Solenoid
8:1	107-7527	1	Seal Kit
8:2	110-2634	1	Nut-Coil

Ref.	Part Number	Qty.	Description
8:3	110-8909	1	Spacer-Coil
9	110-8906	1	Valve-Solenoid
9:1	110-8908	1	Spool Valve Seal Kit
9:2	110-2634	1	Nut-Coil
10	110-0497	3	Coil-Solenoid
11	110-6344	1	Coil-12V, Dc
13	110-8904	2	Orifice-Control, Flow (0.028)
14	340-132	1	Fitting-90 DEG
14:1	237-78	1	O-Ring
14:2	237-21	1	O-Ring
15	340-54	1	Elbow-45 DEG
15:1	237-22	1	O-Ring
15:2	237-78	1	O-Ring

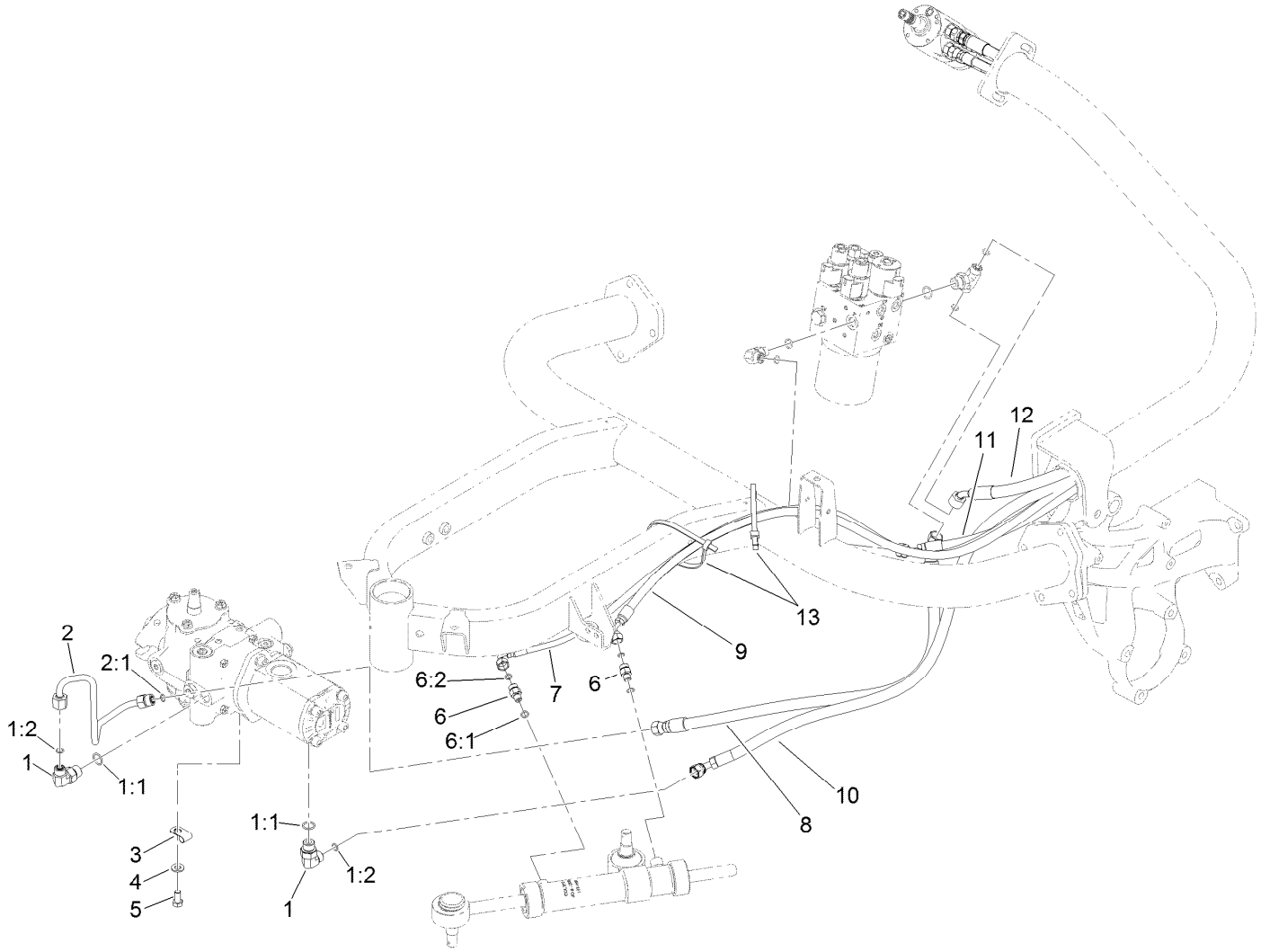

Steering Circuit Assembly

Ref.	Part Number	Qty.	Description
1	340-18	2	Fitting-HYD, 90 DEG
1:1	237-79	1	O-Ring
1:2	237-22	1	O-Ring
2	121-6660	1	Tube-HYD
2:1	237-22	1	O-Ring
3	2412-113	1	Clamp-R
4	3256-24	1	Washer-Flat
5	323-4	1	Screw-HH
6	340-92	2	Fitting-Straight
6:1	237-78	1	O-Ring

Ref.	Part Number	Qty.	Description
6:2	237-21	1	O-Ring
7	119-8124	1	HYD Hose ASM
8	119-2062	1	HYD Hose ASM
9	119-8123	1	HYD Hose ASM
10	119-2070	1	HYD Hose ASM
11	117-3683	1	HYD Hose ASM
12	117-3684	1	HYD Hose ASM (Steering Tank)
13	3334-945	2	Tie-Cable

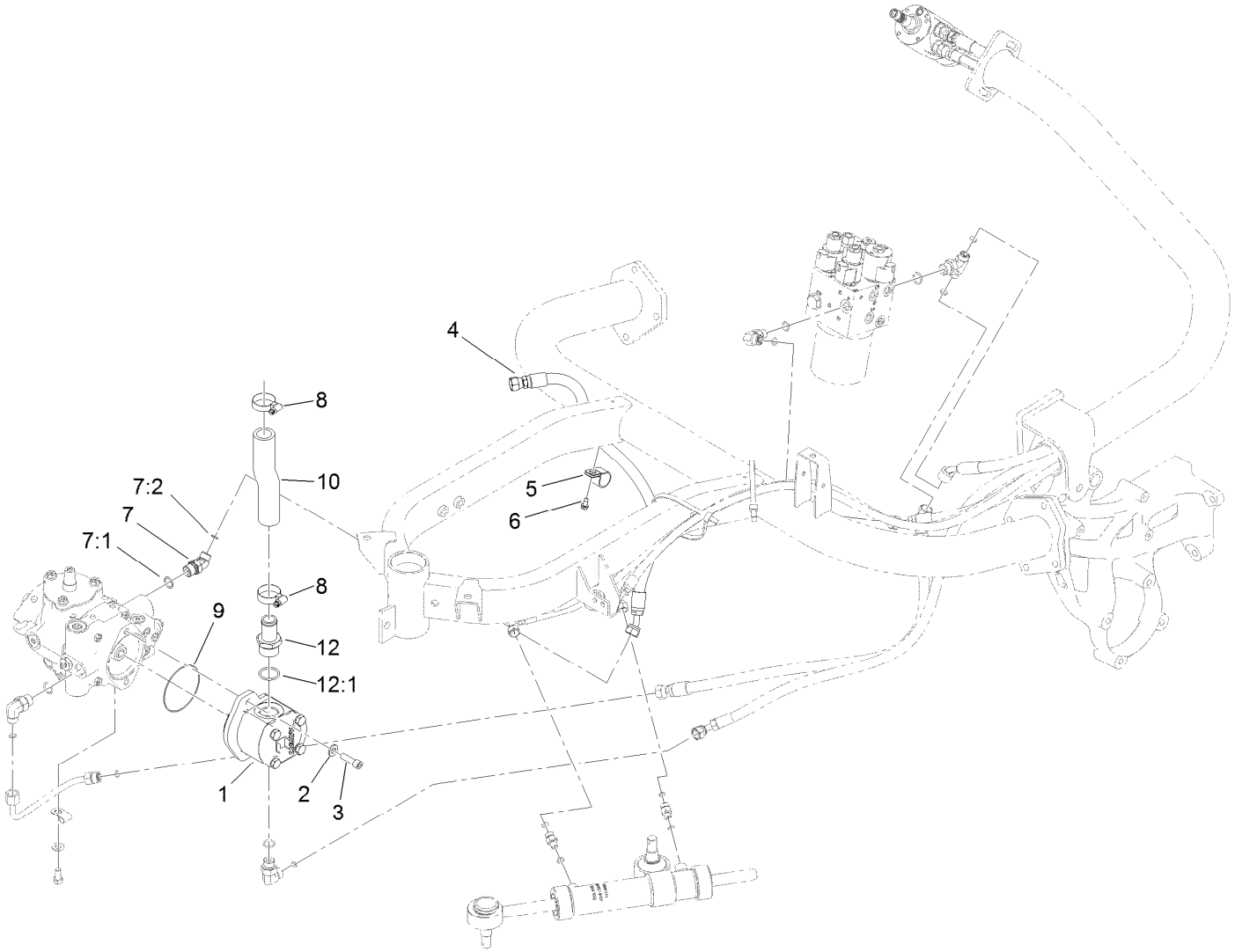

Steering Circuit Assembly (2)

Ref.	*Part Number*	*Qty.*	*Description*
1	114-9958	1	HYD Gear Pump ASM
2	100-4852	2	Washer-Hardened
3	3274-1	2	Screw-HSH
4	119-8125	1	HYD Hose ASM
5	2412-39	2	Clamp-R
6	32104-17	1	Screw-HWH
7	340-138	1	Fitting-HYD, 45 DEG
7:1	237-79	1	O-Ring
7:2	237-22	1	O-Ring
8	1-633989	2	Clamp-Hose
9	353-949	1	O-Ring
10	119-2069	1	Hose-Suction
12	354-78	1	Connector-Hose
12:1	237-146	1	O-Ring

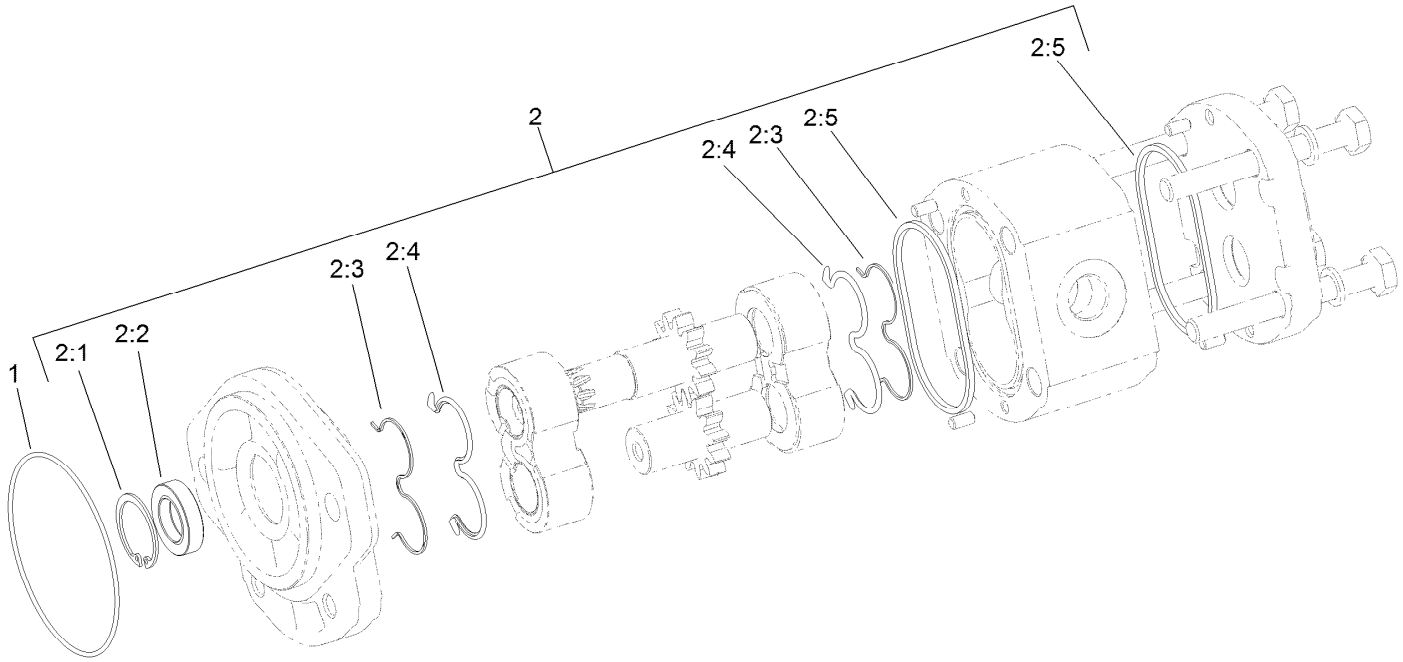

Hydraulic Gear Pump Assembly No. 114-9958

Ref.	*Part Number*	*Qty.*	*Description*
1	60-3520	1	O-Ring
2	119-7135	1	Kit-Seal
2:1		1	Ring-Retaining ●
2:2		1	Shaft Seal ●
2:3		2	Anti-Extrusion Seal ●
2:4		2	Seal ●
2:5		2	Seal Square Section ●

● Not serviced separately

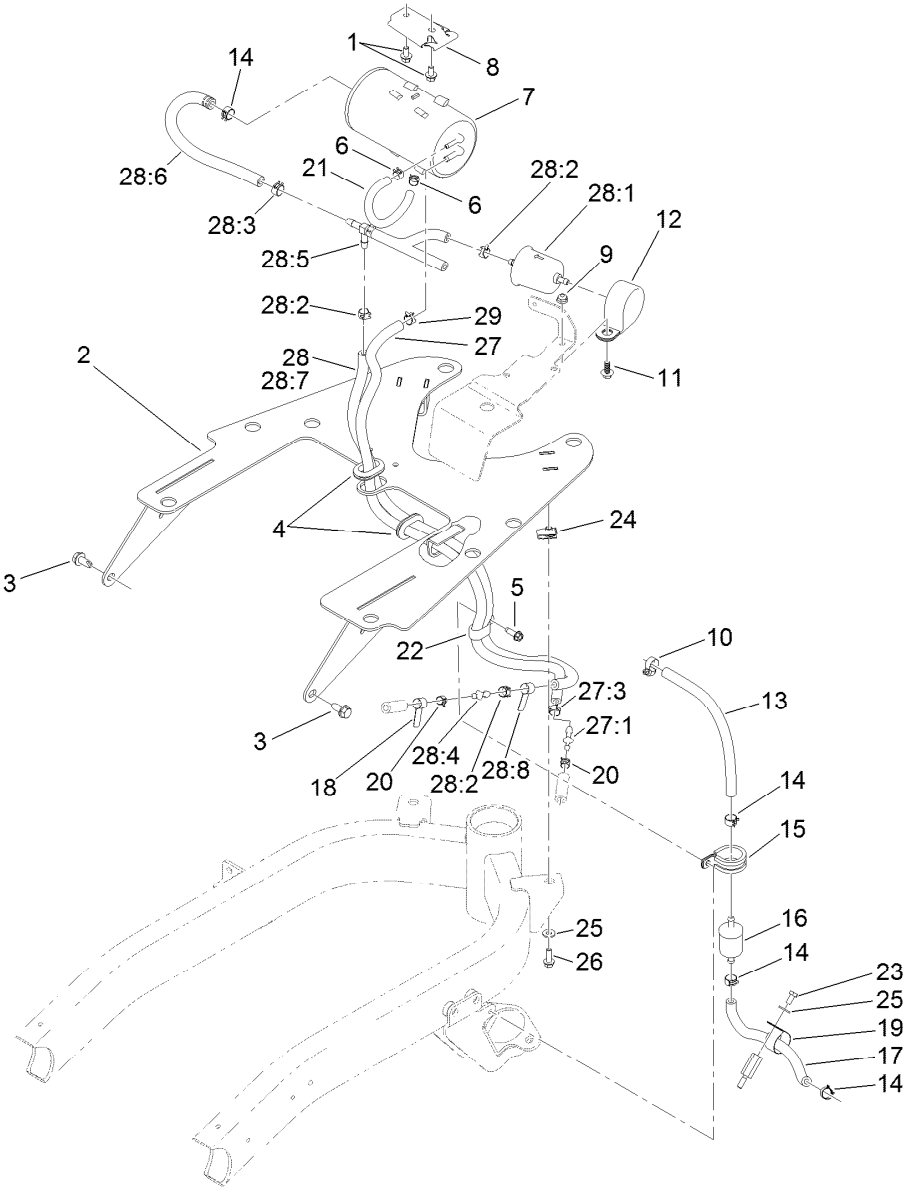

Fuel Line and Carbon Canister Hose Routing Assembly

Ref.	Part Number	Qty.	Description
1	3234-13	2	Screw-HHF
2	121-5176-03	1	Plate-Mount, Tank
3	32104-32	2	Screw-HWH
4	240-5	2	Grommet
5	49-2040	1	Screw-HWHTF
6	2412-146	3	Clamp-Hose
7	115-2251	1	Canister-Carbon
8	114-0292	1	Bracket-Canister, Carbon
9	104-7201	2	Nut-HF
10	2412-108	1	Clamp-Worm
11	99-6810	1	Screw-HHF
12	100-1424	1	Clamp-R
13	109-0282	1	Hose-Fuel
14	92-2379	3	Clamp-Hose
15	120-2037	1	R-Clamp
16	94-2690	1	Filter-Fuel
17	109-0293	1	Hose-Fuel
18	121-6664	1	Decal-Cleaner, Air
19	2412-104	1	Clamp-R
20	2412-80	1	Clamp-Hose
21	119-8523	1	Hose-Fuel
22	119-8153	1	Clamp-R, Double Tube
23	33113-012	1	Screw-HH
24	107069	2	Clip
25	3256-22	3	Washer-Flat
26	115-5103	2	Screw-HHF
27	121-5181	1	Purge Hose ASM
27:1	121-2573	1	Fitting-Straight
27:3	2412-98	2	Clamp-Hose
28		1	Tee Hose ASM ●
28:1	121-2583	1	Filter-Fuel, Inline
28:2	2412-98	3	Clamp-Hose
28:3	92-2379	2	Clamp-Hose

● Not serviced separately

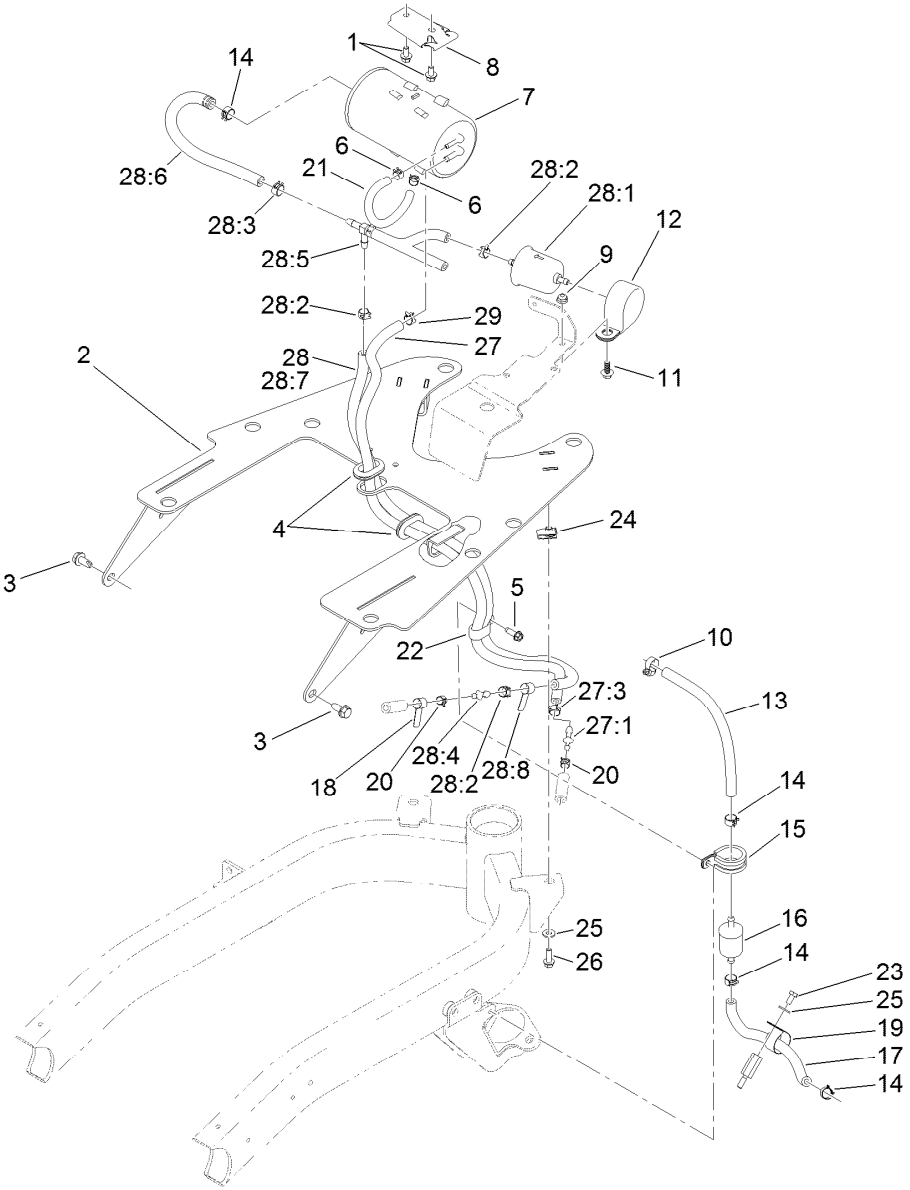

Fuel Line and Carbon Canister Hose Routing Assembly (continued)

Ref.	Part Number	Qty.	Description
28:4	121-2573	1	Fitting-Straight
28:5	121-6663	1	Check Valve Hose ASM
28:6	110-4105	1	Hose-Fuel
28:7	109-3491	1	Hose-Fuel
28:8	121-6664	1	Decal-Cleaner, Air
29	2412-98	1	Clamp-Hose

● Not serviced separately

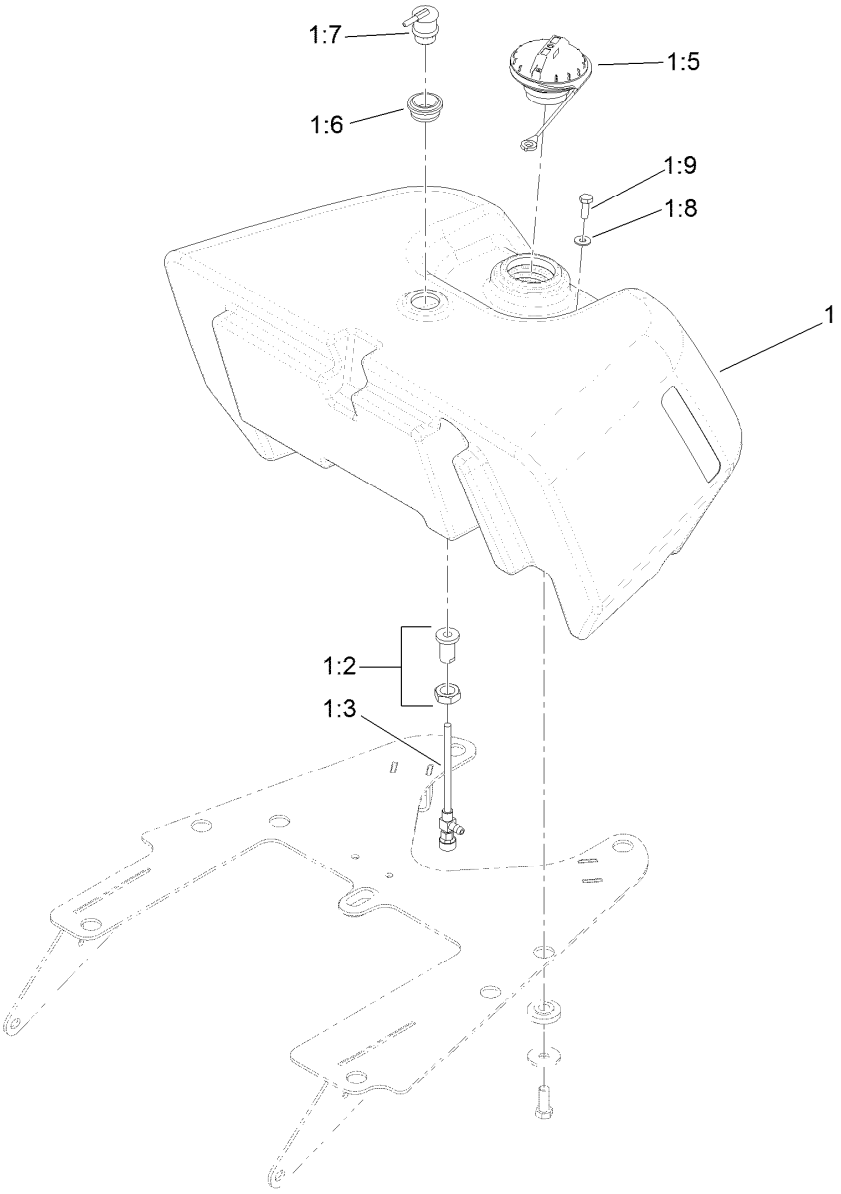

Fuel Tank Assembly

Ref.	*Part Number*	*Qty.*	*Description*
1	121-5157	1	Fuel Tank ASM
1:2	114-4677	1	Bulkhead ASM
1:3	114-4679	1	Fitting-Shut Off, Fuel
1:5	117-1722	1	Cap-Fuel
1:6	114-0284	1	Grommet
1:7	119-3547	1	Valve-Vent, Fuel
1:8	3256-1	1	Washer-Flat
1:9	321-2	1	Screw-HH

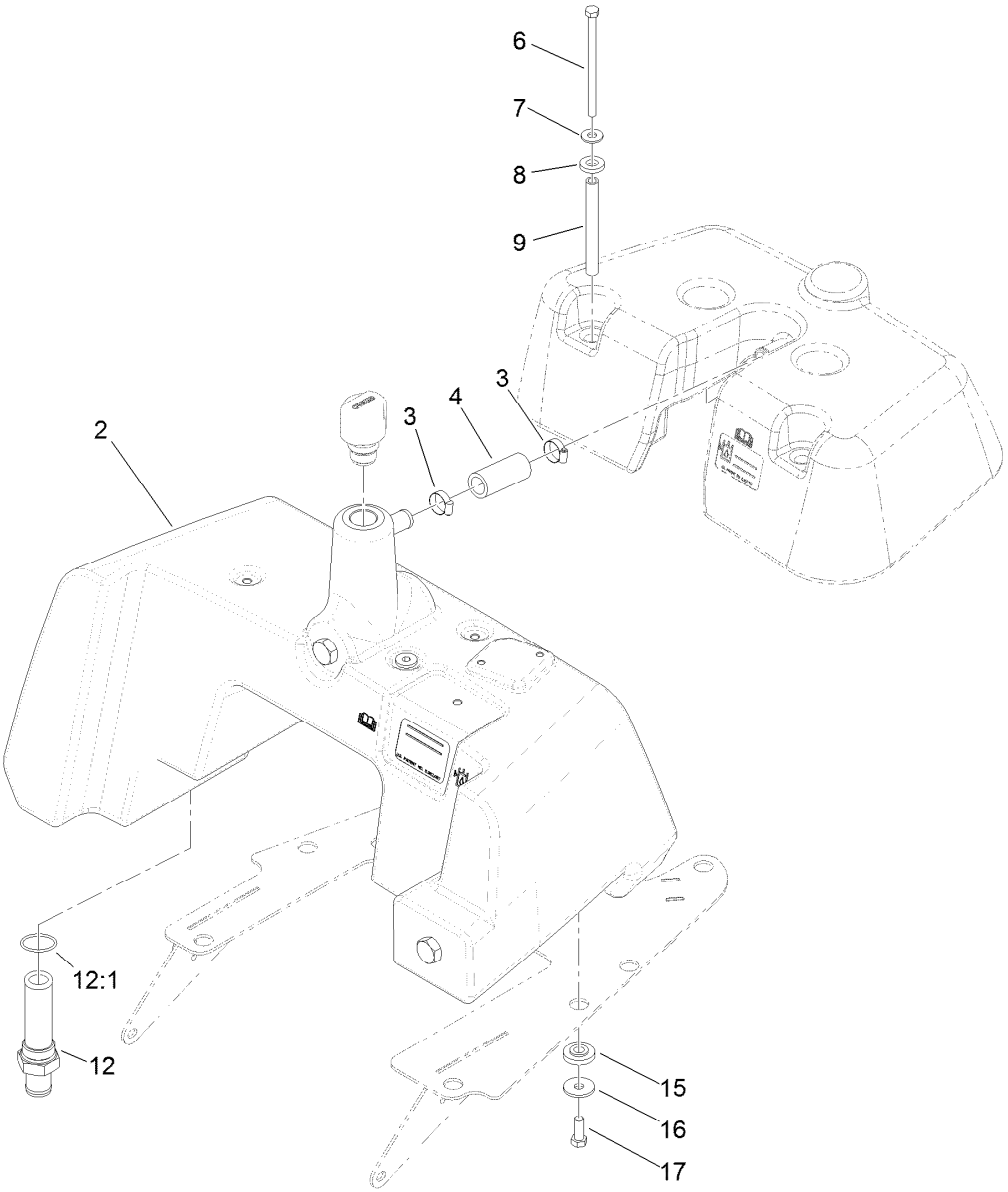

Hydraulic Tank Assembly

Ref.	Part Number	Qty.	Description
2	115-9822	1	Tank-Hydraulic
3	2412-141	2	Clamp-Drive, Worm
4	110-3998	1	Hose-Overflow
6	322-29	4	Screw-HH
7	3256-71	4	Washer-Flat
8	83-1470	4	Washer-Neoprene
9	115-9825	4	Spacer-Tube, Long
12	112-0211	1	Strainer Fitting ASM
12:1	237-146	1	O-Ring
15	240-11	8	Bushing-Flange
16	63-8410	8	Washer
17	323-6	8	Screw-HH

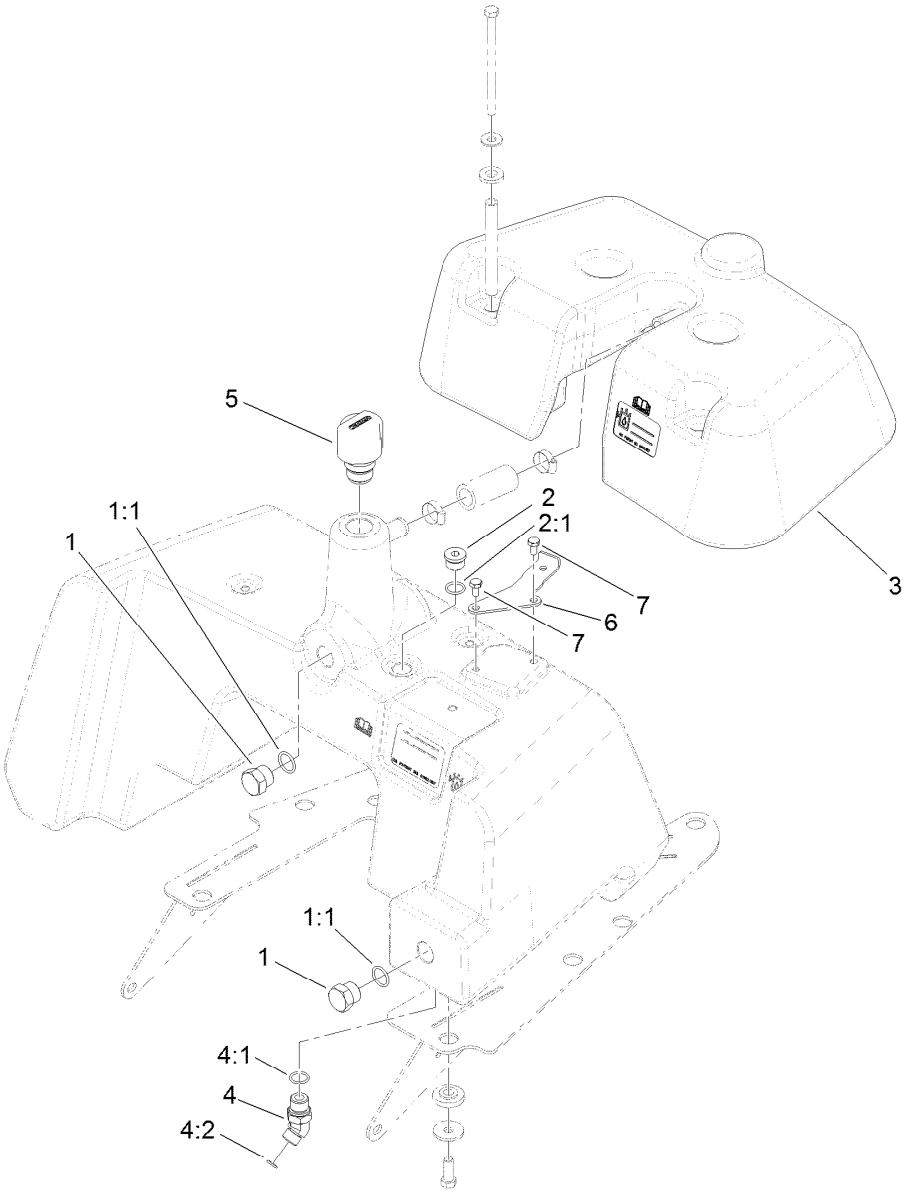

Hydraulic Tank Cover Assembly

Ref.	*Part Number*	*Qty.*	*Description*
1	353-551	2	Plug-HH
1:1	237-80	1	O-Ring
2	353-988	1	Plug-Hex
2:1	237-79	1	O-Ring
3	120-2041	1	Tank-Cover
4	340-138	1	Fitting-HYD, 45 DEG
4:1	237-79	1	O-Ring
4:2	237-22	1	O-Ring
5	115-9793	1	Breather
6	121-5182	1	Plate-Filter
7	120-9688	2	Screw-HH

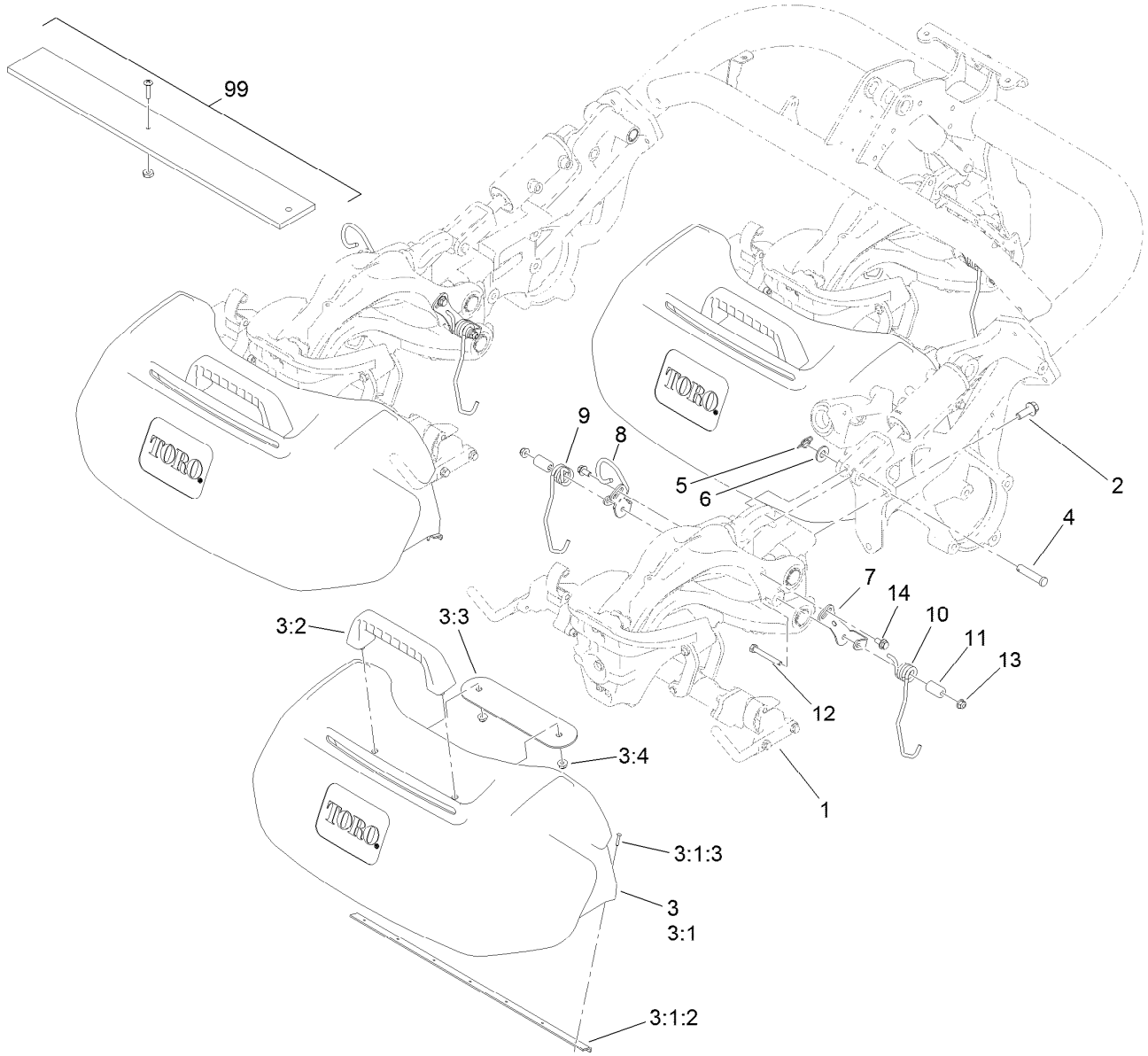

Suspension and Basket Assembly

Ref.	Part Number	Qty.	Description
1		3	Suspension ASM ●
2	117-9035	9	Screw-HHF
3	117-8096	3	Basket ASM
3:1	117-8094	1	Grass Basket ASM
3:1:2	115-5274	1	Support-Basket
3:1:3	3290-382	7	Rivet-Pop
3:2	117-8088	1	Handle-Grab
3:3	117-8092-03	1	Plate-Mounting
3:4	104-8300	2	Nut-HF, NI
4	92-2739	3	Pin-Clevis
5	112-1491	3	Pin-Cotter
6	29-8910	3	Washer

Ref.	Part Number	Qty.	Description
7	117-6822	3	Retainer-Spring, LH
8	120-4617	3	Bracket ASM
9	117-6826	3	Spring-Stabilizer, RH
10	117-6827	3	Spring-Stabilizer, LH
11	117-6825	6	Spacer
12	322-12	6	Screw-HH
13	104-8300	6	Nut-HF, NI
14	114-7728	6	Screw-Threadlock
99	32122-22	1	Screw-PTH
99	3219-14	1	Nut-Hex
99	65-8320	1	Bar-Gauge

● Not serviced separately

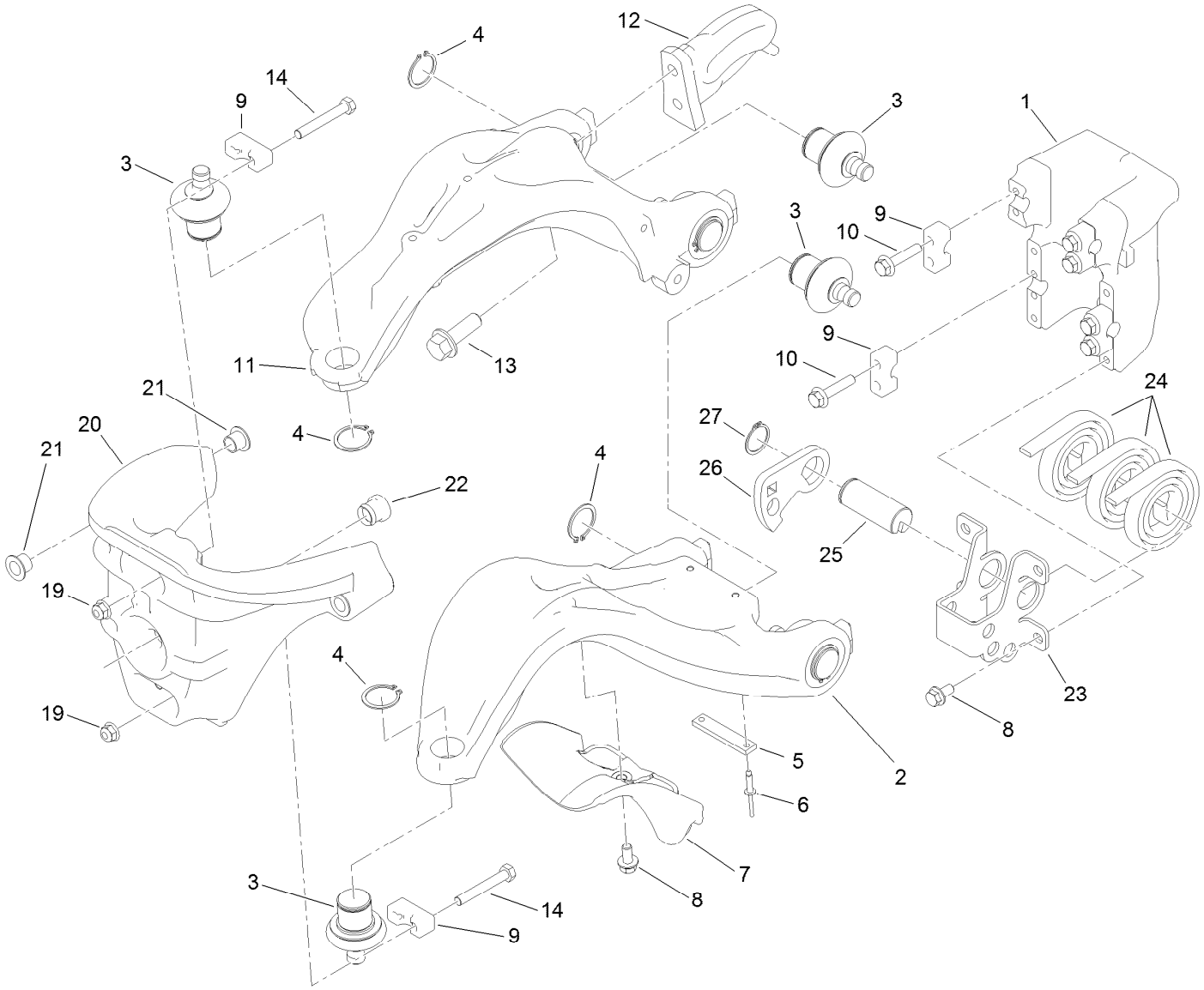

Suspension A-Arm Assembly

Ref.	Part Number	Qty.	Description
1	117-9480	1	Mount-Pivot, A-Arms
2	117-6656	1	A-Arm, Lower
3	117-6658	6	Balljoint
4	120-3225	6	Ring-Retaining, EXT
5	117-6674	1	Plate-Striker
6	3269-28	2	Rivet-Pop
7	117-6755	1	Stop-Steering
8	114-7728	5	Screw-Threadlock
9	112-5647	6	Clamp
10	132-3837	8	Screw-HHF
11	117-6648	1	A-Arm, Upper
12	117-6650	1	Plate-Lift

Ref.	Part Number	Qty.	Description
13	100-6116	2	Screw-HHF
14	132-3838	4	Screw-HH
19	104-8300	4	Nut-HF, NI
20	120-3216	1	Steering Head ASM
21	93-2561	4	Bushing-Flange
22	117-6819	1	Grommet
23	117-6730	1	Mount-Counterbalance
24	114-9306	3	Spring
25	117-6608	1	Pin
26	117-6738	1	Arm-Tensioner
27	32151-29	1	Ring-Retaining

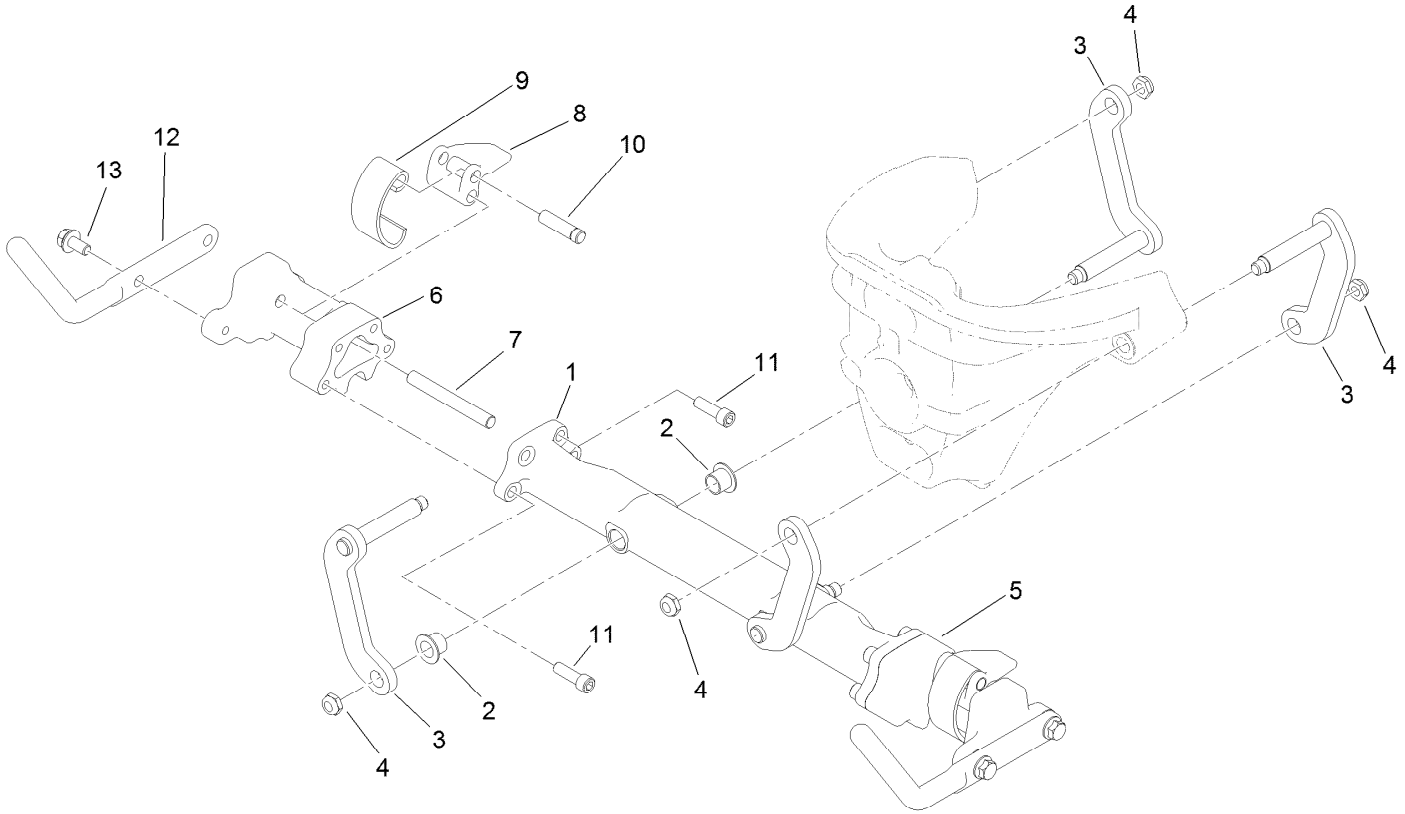

Suspension Crossarm Assembly

Ref.	Part Number	Qty.	Description
1	120-3217	1	Crossarm ASM
2	93-2561	4	Bushing-Flange
3	117-6654	4	Link ASM
4	3296-59	4	Nut-Lock, NI
5	117-9482	1	Mount-Cross Arm, LH
6	117-9492	1	Mount-Cross Arm, RH
7	114-8051	2	Pin-Pivot
8	114-8047	2	Lever
9	114-8048	2	Spring
10	114-8049	2	Pin-Pivot
11	120-3227	8	Screw-HSH
12	117-8091-03	2	Horn-Basket
13	114-7728	4	Screw-Threadlock

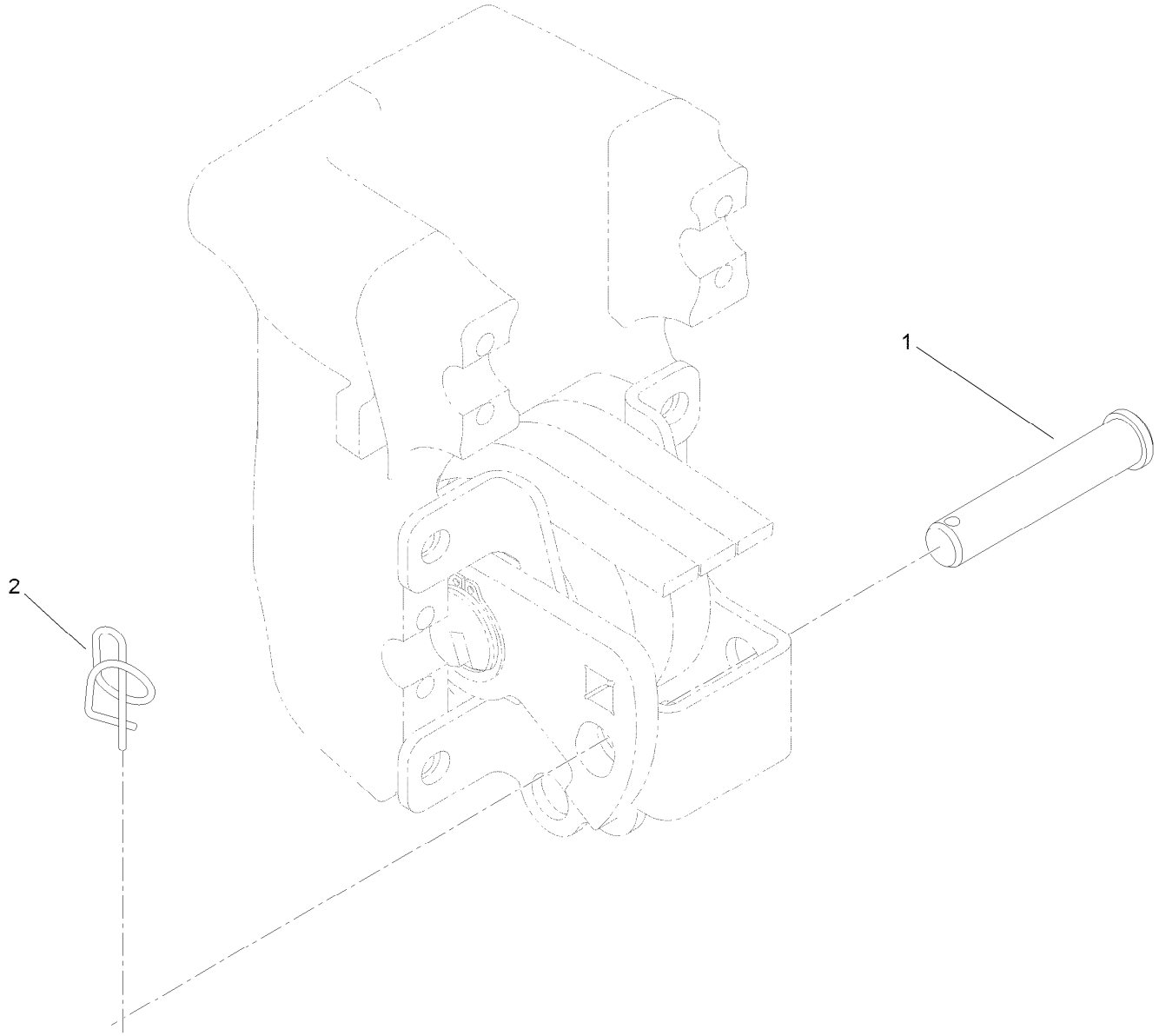

Suspension Pin Position Assembly

Ref.	Part Number	Qty.	Description
1	100-6541	3	Pin-Clevis
2	112-1491	3	Pin-Cotter

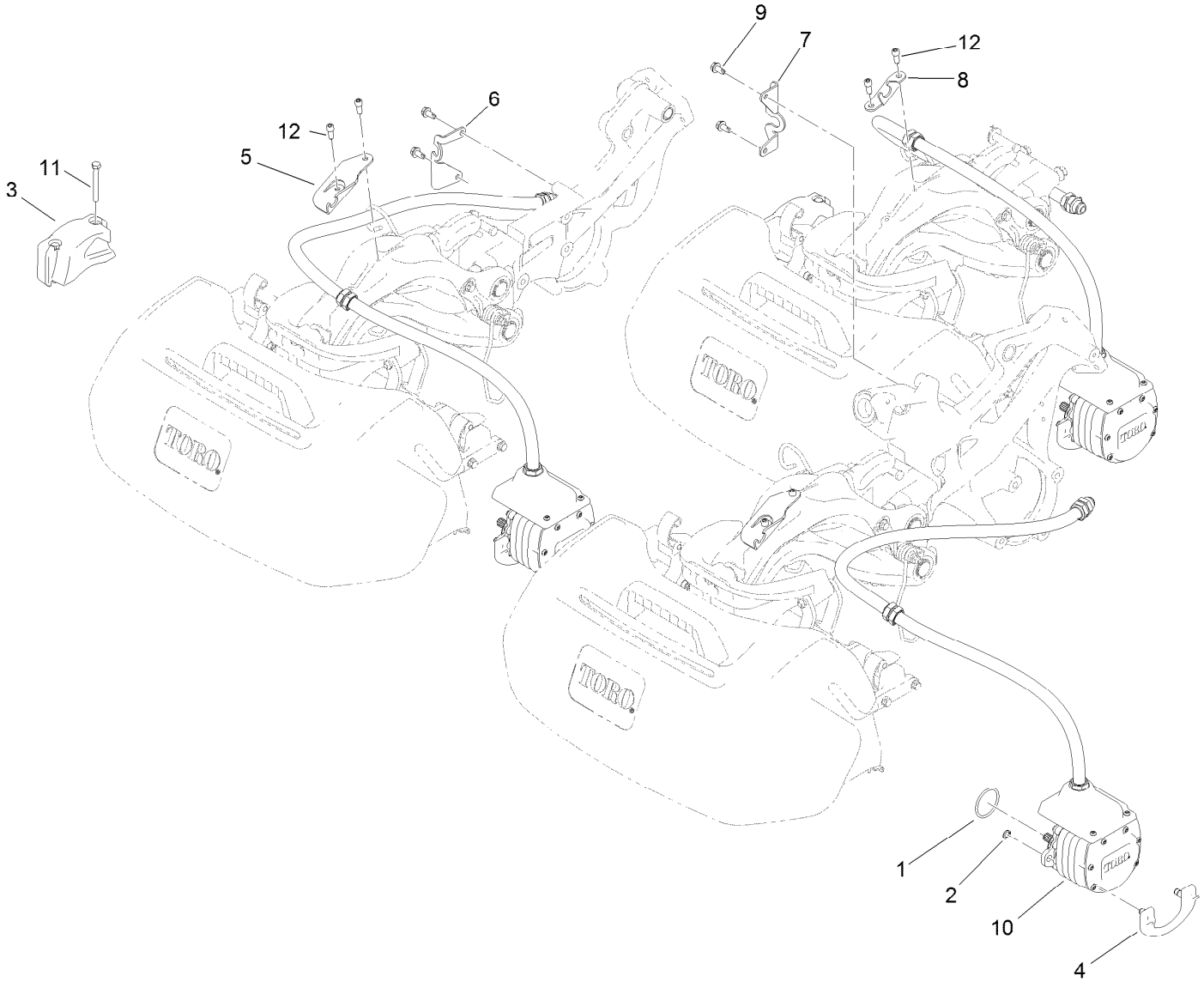

Electric Reel Motor Assembly

Ref.	Part Number	Qty.	Description
1	115-3298	3	O-Ring
2	115-5206	6	Ring-Retaining
3	117-6774-03	3	Weight-Electric
4	115-5389	3	Cam-Mount, Motor
5	119-7487	2	Bracket-Clamp, Hose
6	120-4551	1	Bracket-Hose
7	120-4531	1	Bracket-Hose
8	119-7540	1	Bracket-Hose, Rear
9	32104-32	4	Screw-HWH
10	119-7575	3	Electric Reel Motor ASM
11	322-13	6	Screw-HH
12	100-2401	6	Screw-HSH

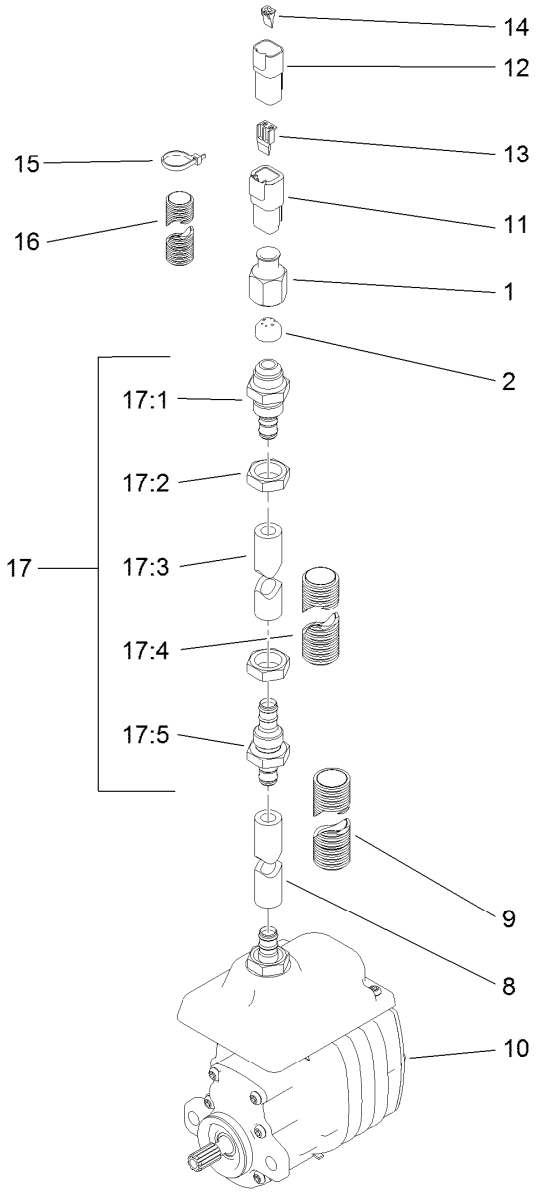

Electric Reel Motor Assembly No. 119-7575

Ref.	Part Number	Qty.	Description
1	119-7481	1	Nut-Ferrule
2	119-7480	1	Ferrule
8	119-7476	1	Hose
9	119-7558	1	Tubing-Convoluted, Slit
10		1	Motor-Electric ●
11	32160-245	1	Connector
12	32160-315	1	Connector
13	32180-083	1	Wedge
14	32180-084	1	Wedge

Ref.	Part Number	Qty.	Description
15	3290-378	4	Tie-Cable
16	120-3223	1	Tubing-Convoluted, Slit
17	120-4532	1	Hose ASM
17:1	119-7545	1	Fitting-Bulkhead
17:2	119-7457	2	Nut
17:3	119-7524	1	Hose
17:4	119-7559	1	Tubing-Convoluted, Slit
17:5	119-7544	1	Fitting-Bulkhead

● Not serviced separately

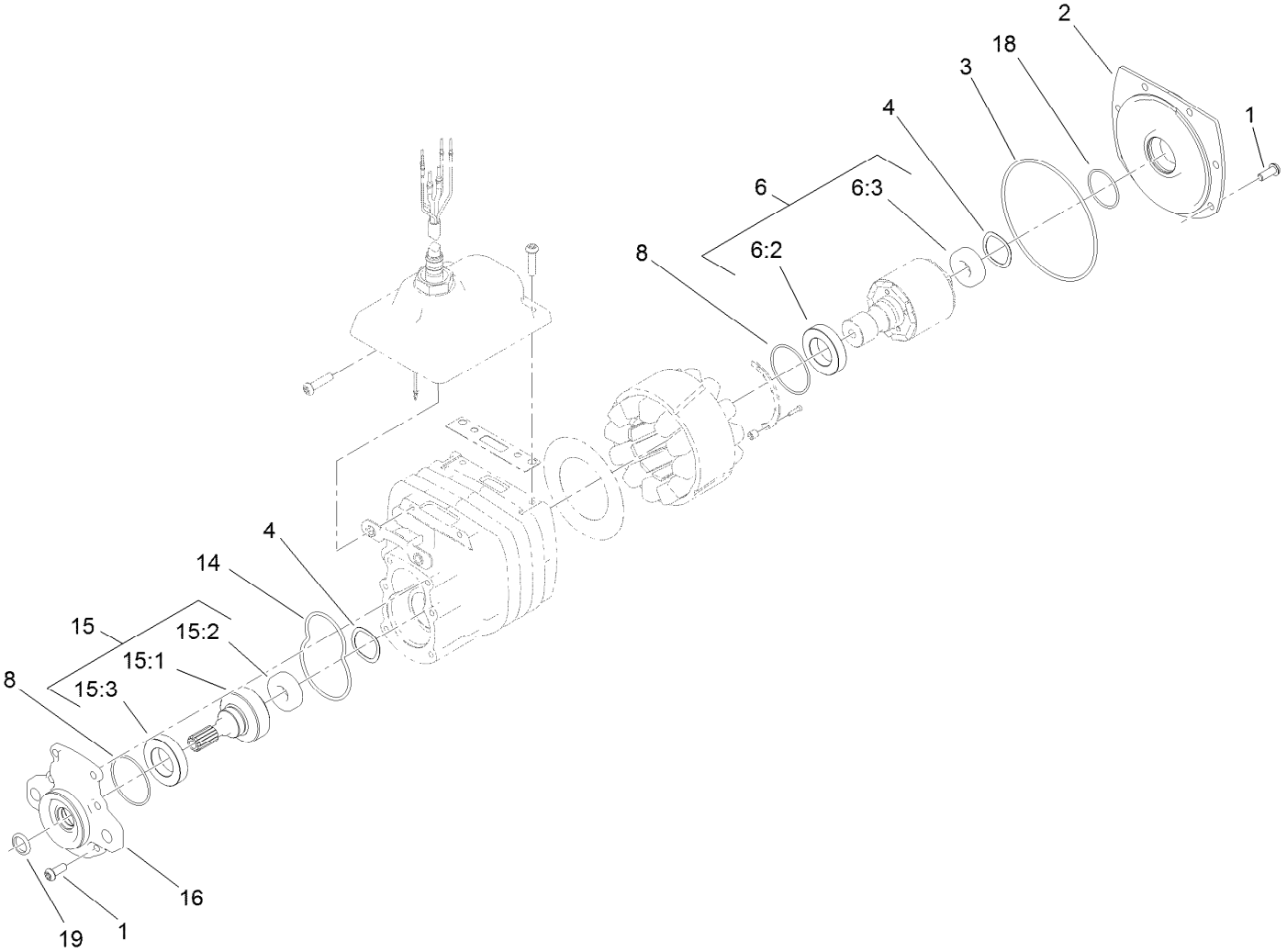

Electric Motor Assembly

Ref.	Part Number	Qty.	Description
1	120-4559	12	Screw-Bhcs
2	115-4779	1	Cover-Motor
3	112-9609	1	O-Ring
4	112-5163	2	Washer-Wave
6	119-7450	1	Rotor ASM
6:2	112-5158	1	Bearing-Ball
6:3	120-4557	1	Bearing
8	112-9616	2	O-Ring

Ref.	Part Number	Qty.	Description
14	112-9611	1	O-Ring
15	115-4782	1	Output Gear ASM
15:1	112-5153	1	Gear-Output
15:2	120-4557	1	Bearing
15:3	112-5158	1	Bearing-Ball
16	115-4777	1	Cover-Gearbox
18	119-1156	1	O-Ring
19	119-7451	1	Seal-Oil

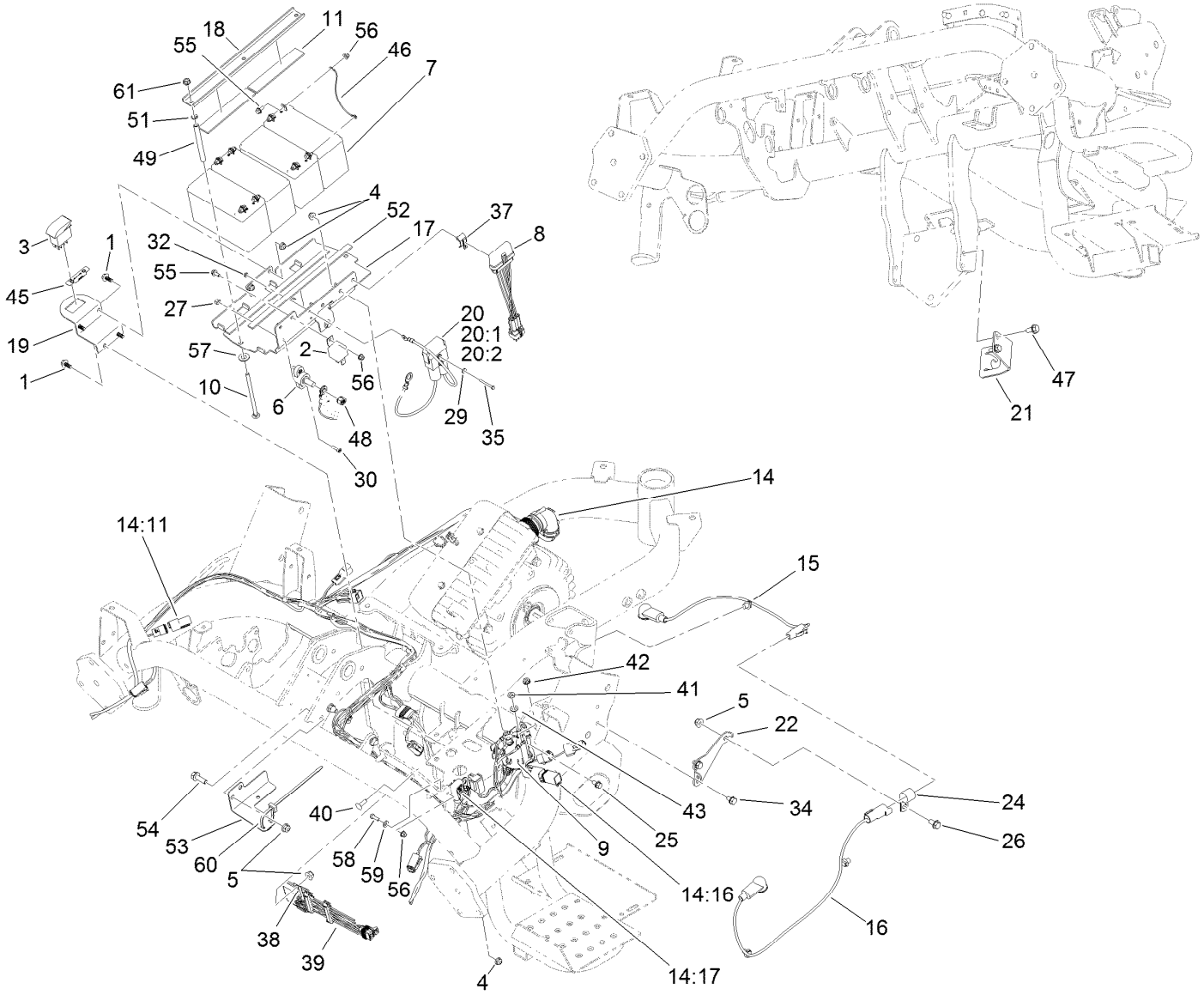

Electric Mow Battery Assembly

Ref.	Part Number	Qty.	Description
1	99-6810	5	Screw-HHF
2	99-7435	1	Relay-Power
3	100-8490	1	Switch-Rocker, On-None-On
4	104-7201	5	Nut-HF
5	104-8300	3	Nut-HF, NI
6	110-8823	1	Block-Junction
7	112-9621	4	Battery- Nonspillable
8	112-9630	1	Module-Reel, I.D.
9	115-4765	1	Contactor
10	120-4585	3	Screw-CARR
11	115-9477	2	Strip-Foam
14	121-6565	1	Wire Harness ASM
14:11	32180-043	2	Resistor-120 Ohm
14:16	119-7781	1	Diode-Sealed
14:17	120-3958	1	Fuse-Blade, 10A
15	119-1783	1	Harness-Wire, Battery Disconnect
16	119-1784	1	Harness-Wire, Battery Disconnect
17	119-2103-01	1	Plate-Battery

Ref.	Part Number	Qty.	Description
18	119-2104-01	1	Channel-Clamp, Battery
19	121-6669-01	1	Bracket-Backlap
20	119-5773	1	Harness-Wire
20:1	120-3954	1	Fuse-60 Amp
20:2	32180-085	1	Fuse-Cover
21	119-7566-03	1	Bracket-Hose, Rear
22	119-8175	1	Bracket-Disconnect
24	2412-4	1	Clamp-R
25	3234-13	2	Screw-HHF
26	3234-7	1	Screw-HHF
27	3296-21	2	Nut-Hex
29	3256-12	2	Washer-Flat
30	3273-26	2	Screw-HSH
32	3296-9	2	Nut-Hex
34	32104-82	2	Screw-HHF
35	32105-21	2	Screw-HH
37	32180-011	1	Clip-Connector
38	32180-020	1	Clip-Connector
39	119-4330	1	Isolated Can Module ASM
40	1-807512	1	Bolt-CARR
41	3220-2	2	Nut-Jam

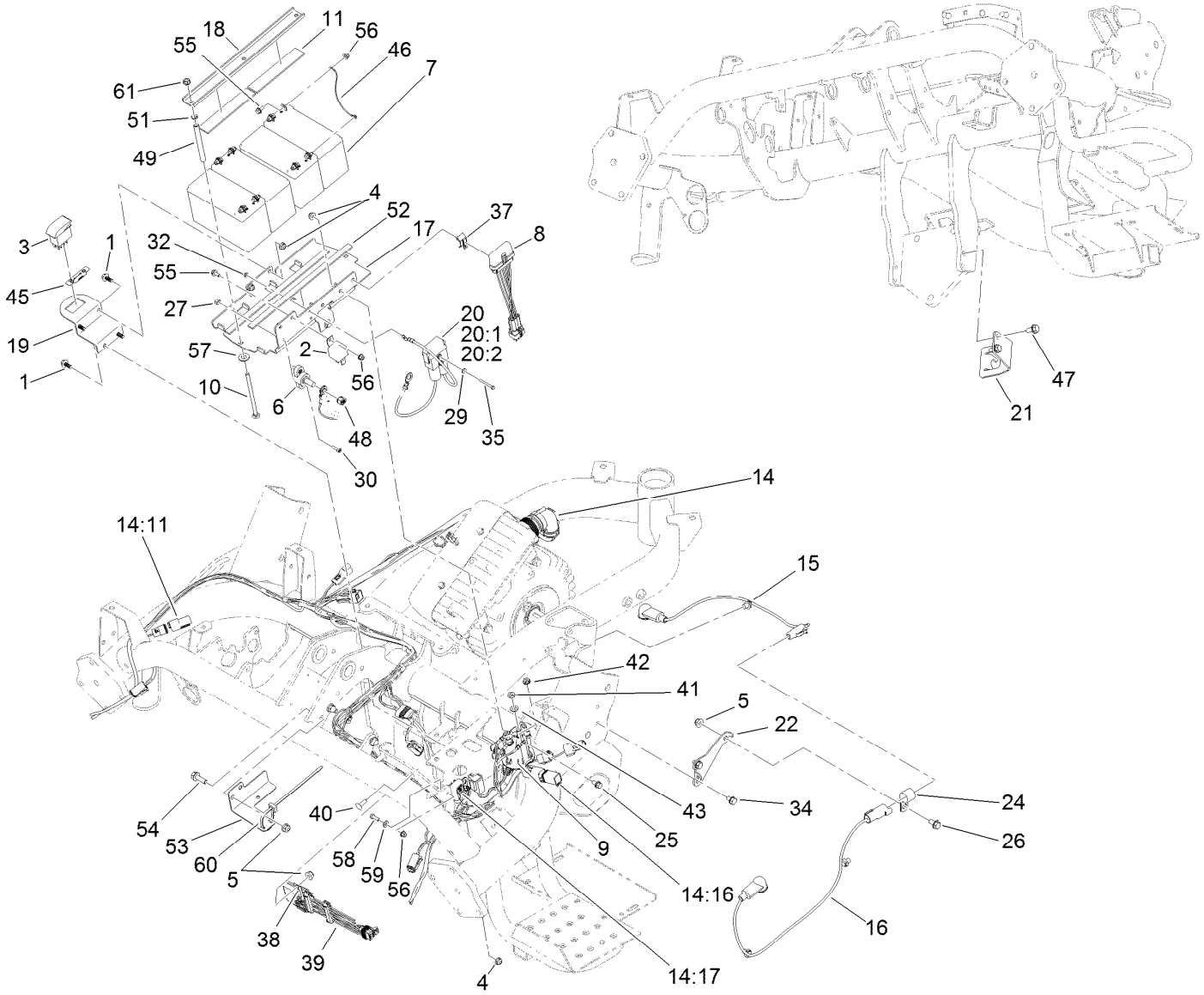

Electric Mow Battery Assembly (continued)

Ref.	Part Number	Qty.	Description
42	32149-8	2	Nut-Keps
43	3253-4	2	Washer-Lock
45	121-6670	1	Decal-Backlap
46	119-1782	3	Battery Jumper Wire Harness ASM
47	32144-14	2	Screw-HWHTF
48	32149-10	1	Nut-Keps
49	120-4586	3	Tube
51	1-803037	3	Nut-Retaining
52	115-8827	2	Foam-Strip

Ref.	Part Number	Qty.	Description
53	120-4570	1	Bracket-Harness
54	3234-29	2	Screw-HHF
55	120-4579	9	Screw-Hfh
56	120-4580	10	Nut-HF
57	48-9220	3	Washer-Plain
58	60-6910	1	Screw-HH
59	3256-14	1	Washer-Flat
60	3290-378	1	Tie-Cable
61	32128-33	3	Nut-HF

Attachments and Accessories

For 04530 Greensmaster 3320 2-Wheel Drive Traction Unit

Product Name	Model/Part
Turf Evaluator	04399
8-Blade DPA Reel Mower	04613
11-Blade DPA Reel Mower	04614
14-Blade DPA Reel Mower	04615
Three-Wheel Drive Kit	04714
Hydraulic Oil Leak Detector Kit	04715
Light Kit	04717
Standard Seat Kit	04718
Premium Seat Kit	04719
Spark Arrestor Screen	104-6540
Premium All Season Hydraulic Fluid (55 Gallon Drum)	108-1177
Premium All Season Hydraulic Fluid (5 Gallon Pail)	108-1178
Premium Engine Oil, 10w30 (55 Gallon Drum)	108-1179
Premium Engine Oil, 10w30 (5 Gallon Pail)	108-1180
Bimini Folding Shade Assembly	115-4510
Bag Kit	119-1715
Premium Synthetic Bio-Degradable Hydraulic Fluid (5 Gallon Pail)	119-2157
Premium Synthetic Bio-Degradable Hydraulic Fluid (55 Gallon Drum)	119-2158
Premium Armrest Kit	119-7105
Weight Kit	119-7129
Three-Wheel Drive Weight Kit	120-5750
400-hour Filter Maintenance Kit	30042
LH Armrest Asm	92-7307
Tire-TURFMATE	99-4506

Notes:

Notes:

Notes:

TORO®

Count on it.