Form No. 3372-226 Rev E

TORO®

Count on it.

Parts Catalog

# Greensmaster® 3320 2-Wheel Drive Traction Unit

**Model No. 04530—Serial No. 312000001 and Up**

Register at www.Toro.com.
Original Instructions (EN)

CE

*3372-226* E

# Ordering Replacement Parts

To order replacement parts, please supply the part number, the quantity, and the description of each part desired.

### Understanding Reference Numbers

Each identified part in an illustration has a reference number. The reference number for a part also appears in the parts list, along with other information about the part.

This catalog uses two special reference number formats, one to indicate parts in a service assembly and another to indicate the quantity of a given part in an illustration.

### Service Assembly Reference Numbers

Parts in service assemblies have reference numbers in the form a:b. The a represents the reference number of the entire service assembly and the b represents a sequential number unique to each part within the service assembly.

For example, a wheel assembly might be identified by reference number 6, the tire by 6:1, the valve by 6:2, and the wheel by 6:3. When you order the assembly identified by reference number 6, you receive all parts identified by reference numbers 6:1,6:2, and 6:3. However, you may also order any part individually. Reference numbers of this type appear in illustration and in parts lists.

### Reference Numbers Indicating Quantity

In an illustration, if a reference number indicates more than one part, the reference number has the form nX y. The n represents the quantity of the part, the X is the multiplication symbol, and the y represents the reference number.

For example, in an illustration, the reference number 2X 37 means that two of the parts identified by reference number 37 are indicated.

# Contents


Roll-Over Protection System Assembly . . . 4
Brake Cable Grommet Assembly . . . 5
Frame Assembly . . . 6
Platform Assembly . . . 7
Right Hand Support Platform Assembly . . . 8
Seatbase Assembly . . . 9
Steering Arm and Adjuster Assembly . . . 10
Brake Cable and Lever Assembly . . . 11
Back Wheel Assembly . . . 12
Hydraulic Cylinder Assembly No. 117-4480 . . . 13
Front Wheel Assembly . . . 14
Right Hand Brake Assembly No. 115-9441 . . . 15
Left Hand Brake Assembly No. 115-9440 . . . 16
Right Hand Wheel Motor Assembly No. 117-4302 . . . 17
Left Hand Wheel Motor Assembly No. 117-4303 . . . 18
Console and Reel Control Assembly . . . 19
Traction Interface Control Assembly . . . 20
Ignition, Throttle and Choke Control Assembly . . . 21
Console Cable Routing Assembly . . . 22
Engine and Exhaust Assembly . . . 23
Generator and Engine Frame Assembly . . . 24
Generator/Controller Assembly No. 117-8185 . . . 25
Generator Assembly No. 117-8182 . . . 26
Generator Service Assembly No. 119-1069 . . . 27
Battery Assembly . . . 28
Wire Harness Assembly . . . 29
Pump Coupling Assembly . . . 30
Hydraulic Pump Assembly No. 114-9957 . . . 31
Neutral Centering Assembly . . . 33
Traction Drive Hydraulic Line Assembly . . . 34
Traction Drive Hose Routing Assembly . . . 35
Lift Circuit Assembly . . . 36
Steering Valve Assembly No. 114-4672 . . . 38
Hydraulic Cylinder Assembly No. 119-8129 . . . 39
Hydraulic Cylinder Assembly No. 119-8128 . . . 40
Hydraulic Lift Manifold Assembly . . . 41
Hydraulic Lift Manifold Assembly No. 117-9856 . . . 42
Steering Circuit Assembly . . . 43
Steering Circuit Assembly (2) . . . 44
Hydraulic Gear Pump Assembly No. 114-9958 . . . 45
Fuel Line and Carbon Canister Hose Routing Assembly . . . 46
Fuel Tank Assembly . . . 48
Hydraulic Tank Assembly . . . 49
Hydraulic Tank Cover Assembly . . . 50
Suspension and Basket Assembly . . . 51
Suspension A-Arm Assembly . . . 52
Suspension Crossarm Assembly . . . 53
Suspension Pin Position Assembly . . . 54
Electric Reel Motor Assembly . . . 55
Electric Reel Motor Assembly No. 119-7575 . . . 56
Electric Motor Assembly . . . 57
Electric Mow Battery Assembly . . . 58
Attachments and Accessories . . . 60



**© 2017—The Toro® Company**


**8111 Lyndale Avenue South**
**Bloomington, MN 55420**





**Contact us at www.Toro.com.**
**Printed in the USA.**


**All Rights Reserved**

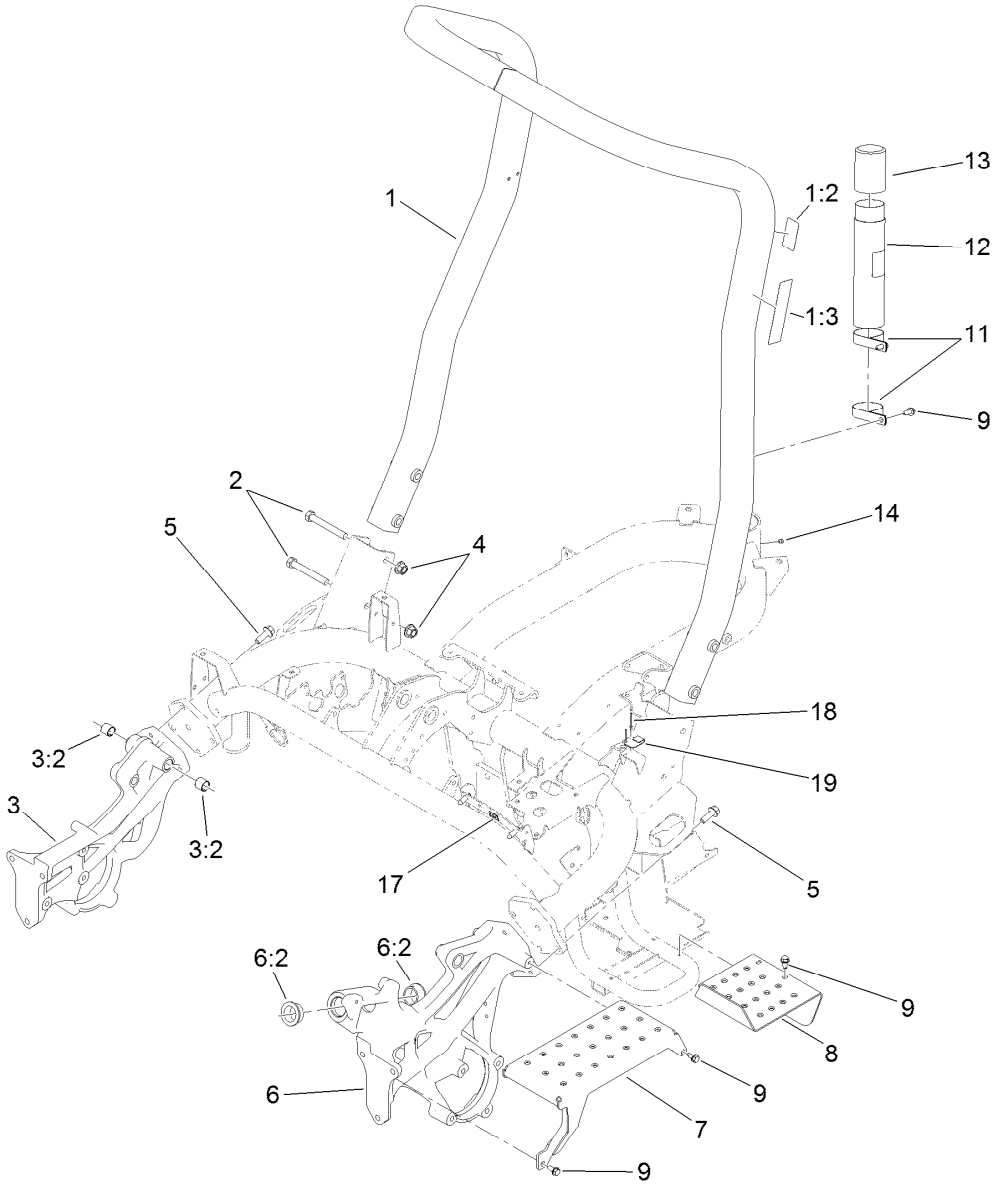


# Roll-Over Protection System Assembly

| Ref. | Part Number | Qty. | Description |
|---|---|---|---|
| 1 | 115-8206 | 1 | ROPS Assembly |
| 1:2 | 115-8199 | 1 | Decal-ROPS |
| 1:3 | 115-8226 | 1 | Decal-ROPS |
| 2 | 325-35 | 4 | Screw-HH |
| 3 | 117-9023 | 1 | Casting-Side, RH |
| 3:2 | 94-9609 | 2 | Bushing-Straight |
| 4 | 99-5107 | 4 | Nut-Lock |
| 5 | 117-9035 | 8 | Screw-HHF |
| 6 | 117-9022 | 1 | Casting-Side, LH |
| 6:2 | 60-0080 | 2 | Bushing |

| Ref. | Part Number | Qty. | Description |
|---|---|---|---|
| 7 | 117-9051-01 | 1 | Step |
| 8 | 119-4468-01 | 1 | Plate-Step |
| 9 | 32104-32 | 9 | Screw-HWH |
| 11 | 2412-133 | 2 | Clamp-R |
| 12 | 104-7050 | 1 | Tube-Manual |
| 13 | 104-7048 | 1 | Cap-Housing |
| 14 | 302-59 | 1 | Plug-Threaded |
| 17 | 119-1730 | 1 | Receptacle-Clip, Mini |
| 18 | 3269-32 | 2 | Rivet-Pop |
| 19 | 121-5865 | 1 | Clip-Cover, Back |

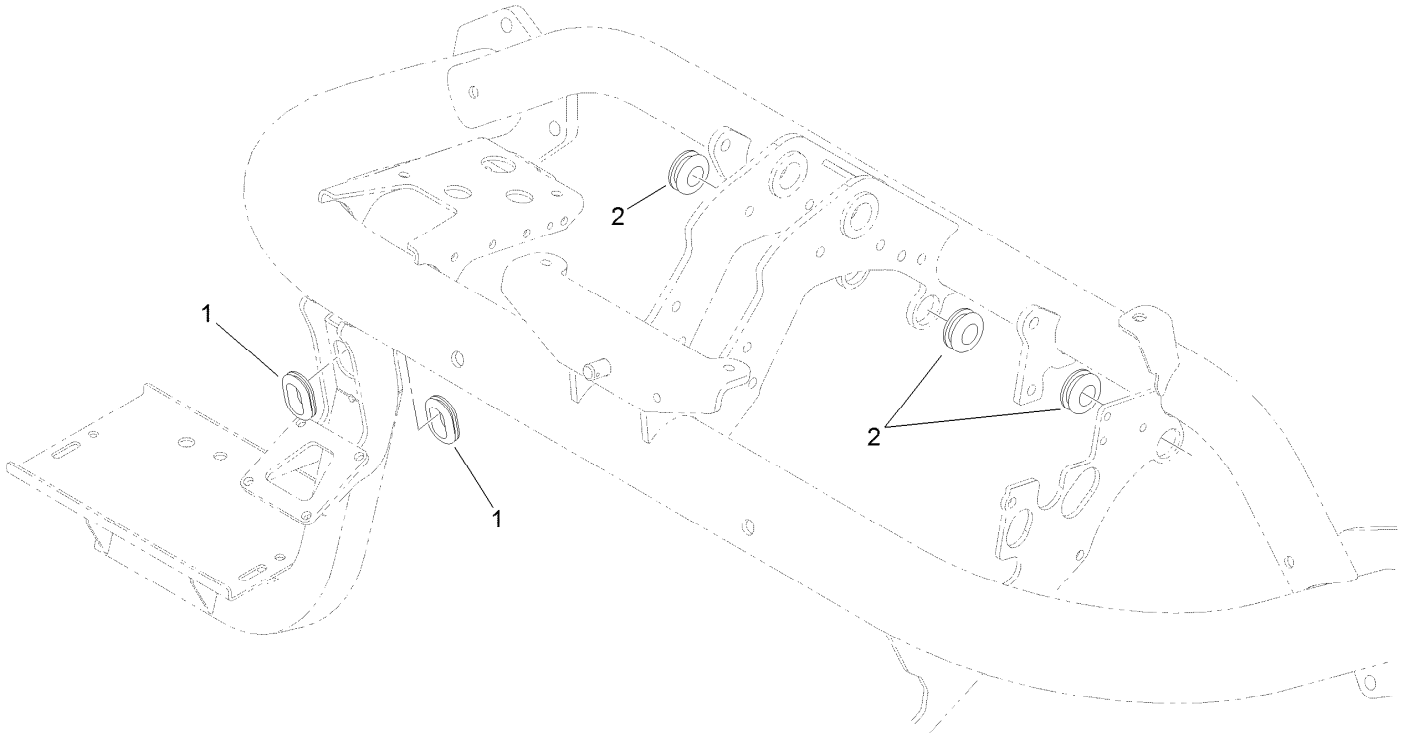


# Brake Cable Grommet Assembly

| Ref. | Part Number | Qty. | Description |
|---|---|---|---|
| 1 | 240-5 | 2 | Grommet |
| 2 | 98-8529 | 3 | Grommet |

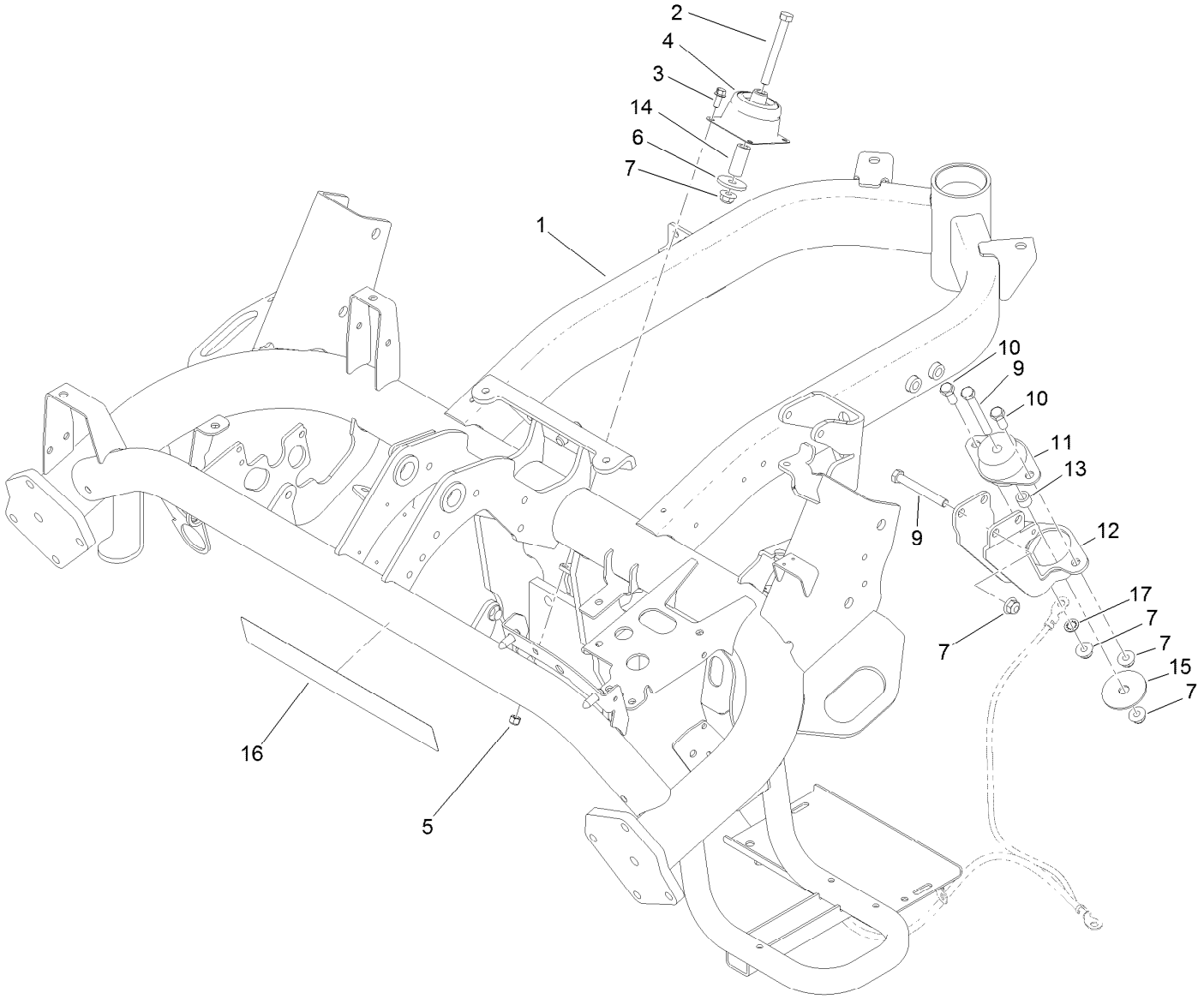


# Frame Assembly

| Ref. | Part Number | Qty. | Description |
|---|---|---|---|
| 1 | 121-5876-01 | 1 | Frame |
| 2 | 323-20 | 2 | Screw-HH |
| 3 | 3234-33 | 8 | Screw-HHF |
| 4 | 117-9327 | 2 | Mount-Engine |
| 5 | 3296-42 | 8 | Nut-Lock, NI |
| 6 | 117-9330 | 2 | Spacer |
| 7 | 104-8301 | 7 | Nut-HF, NI |
| 9 | 323-14 | 3 | Screw-HH |

| Ref. | Part Number | Qty. | Description |
|---|---|---|---|
| 10 | 323-5 | 2 | Screw-HH |
| 11 | 53-9680 | 1 | Mount-Engine |
| 12 | 117-9256-01 | 1 | Mount-Engine, Rear |
| 13 | 52-2480 | 1 | Spacer-Wheel |
| 14 | 104-0151 | 2 | Spacer |
| 15 | 87-5100 | 1 | Washer-Snubbing |
| 16 | 115-8195 | 1 | Decal |
| 17 | 3254-6 | 1 | Washer-Lock, Internal |

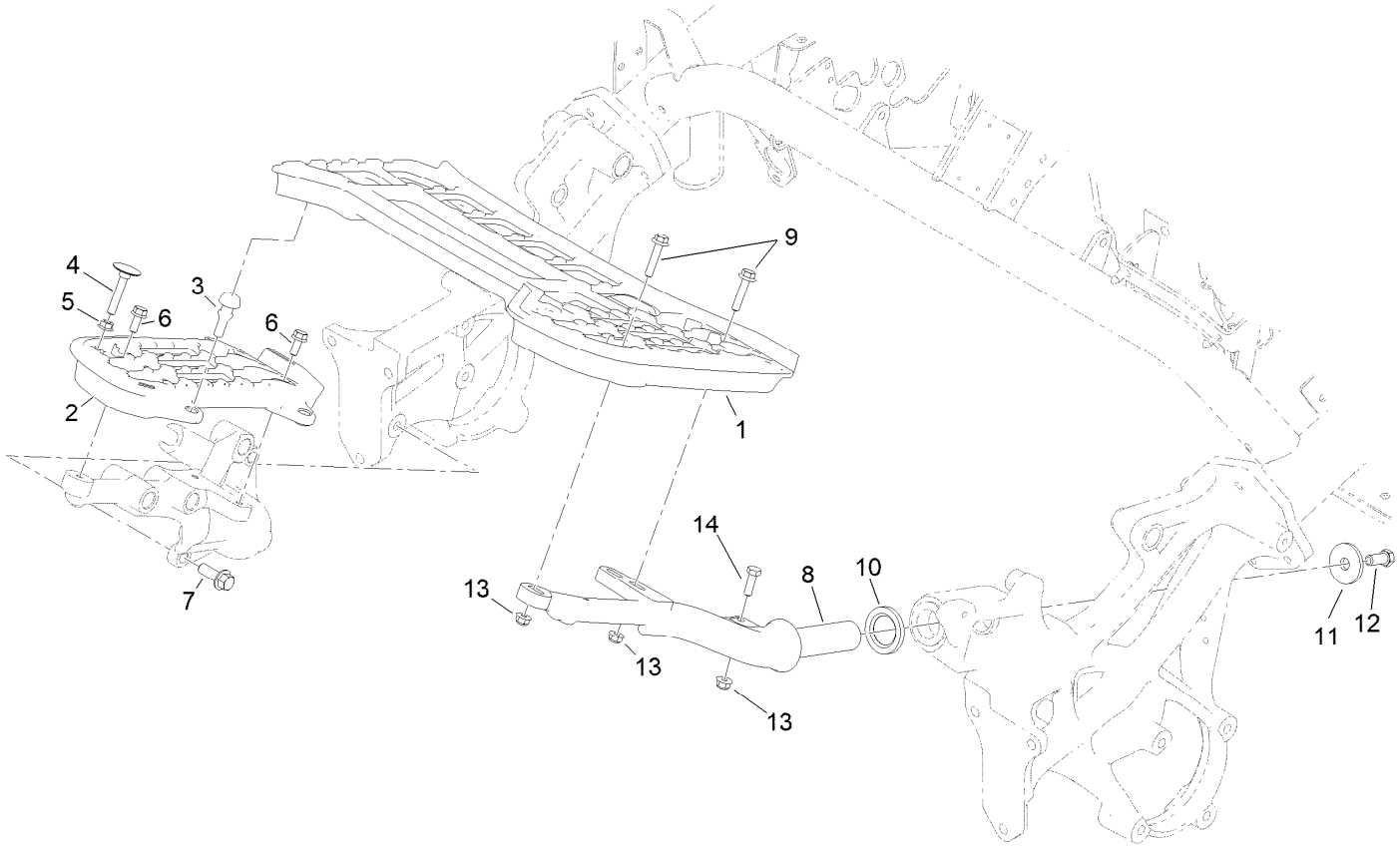


# Platform Assembly

| *Ref.* | *Part Number* | *Qty.* | *Description* |
|---|---|---|---|
| 1 | 117-9009 | 1 | Platform-LH |
| 2 | 117-9008 | 1 | Platform-RH |
| 3 | 117-9072 | 2 | Bumper-Rubber |
| 4 | 115-8240 | 1 | Screw-Elevator |
| 5 | 32128-20 | 1 | Nut-HF |
| 6 | 3234-47 | 3 | Screw-HHF |
| 7 | 117-9035 | 3 | Screw-HHF |
| 8 | 117-9006-01 | 1 | Support-Platform, LH |
| 9 | 115-1794 | 3 | Screw-HHF |
| 10 | 94-8946 | 1 | Washer-Thrust |
| 11 | 84-1560 | 1 | Washer-Thrust |
| 12 | 324-4 | 1 | Screw-HH |
| 13 | 104-8300 | 4 | Nut-HF, NI |
| 14 | 322-5 | 1 | Screw-HH |

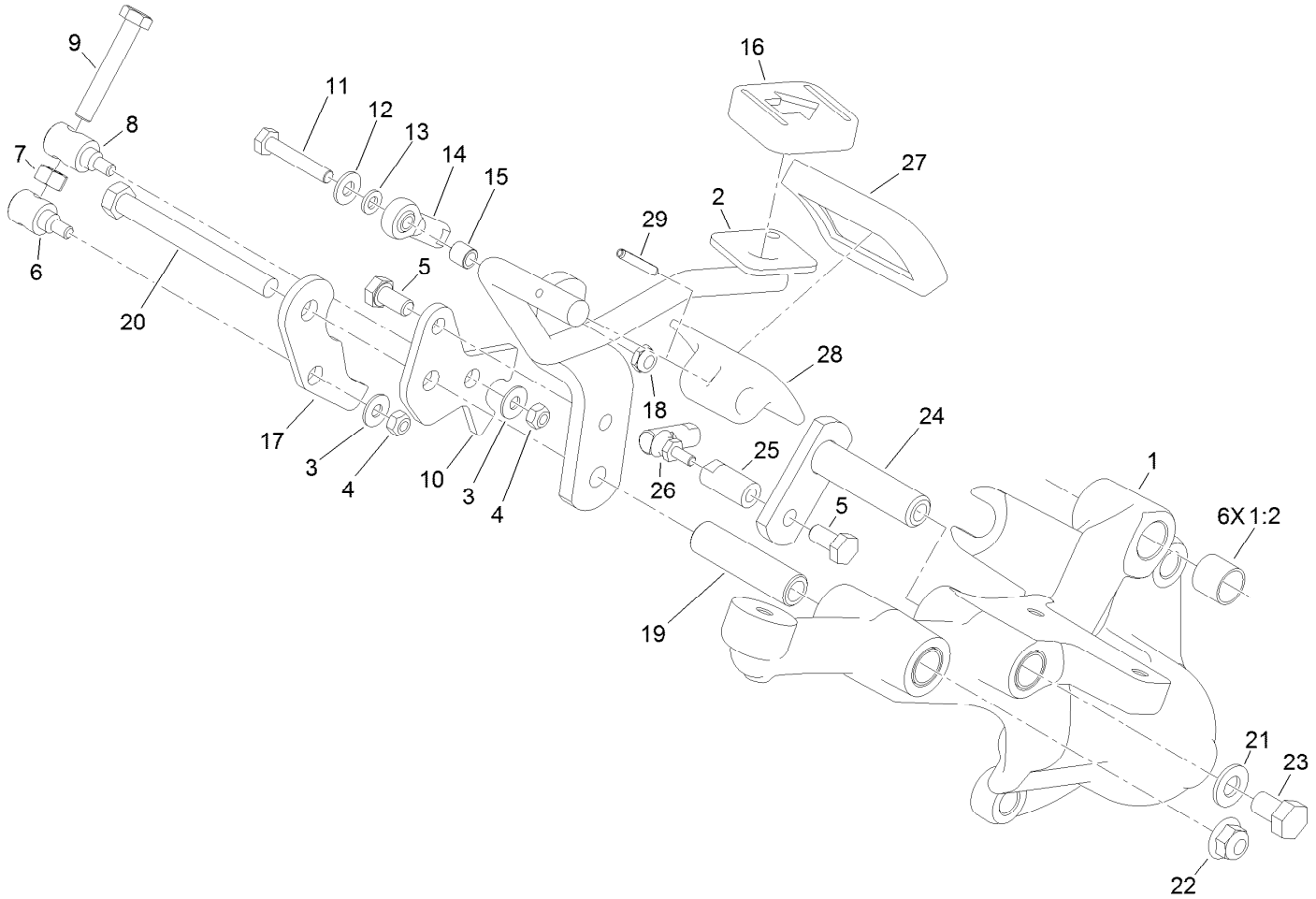


# Right Hand Support Platform Assembly

| Ref. | Part Number | Qty. | Description |
|---|---|---|---|
| 1 | 117-9019 | 1 | Support-Platform, RH |
| 1:2 | 256-311 | 6 | Bushing-Split |
| 2 | 119-1725-01 | 1 | Rod-Traction |
| 3 | 3256-1 | 2 | Washer-Flat |
| 4 | 33023-00 | 2 | Nut-Lock |
| 5 | 33114-016 | 2 | Screw-HH |
| 6 | 94-1374 | 1 | Trunnion-Bracket, Mow |
| 7 | 33014-00 | 1 | Nut-Hex |
| 8 | 94-1375 | 1 | Trunnion-Bracket, Lock |
| 9 | 94-3489 | 1 | Screw-HH |
| 10 | 117-9021 | 1 | Bracket-Lock |
| 11 | 321-9 | 1 | Screw-HH |
| 12 | 3256-22 | 1 | Washer-Flat |
| 13 | 33093-00 | 1 | Washer-Flat |
| 14 | 2411-41 | 1 | Rod End-Ball Joint |

| Ref. | Part Number | Qty. | Description |
|---|---|---|---|
| 15 | 99-3545 | 1 | Spacer |
| 16 | 74-9110 | 1 | Pad-Pedal, Reverse |
| 17 | 119-9315 | 1 | Bracket-Mow |
| 18 | 3296-56 | 1 | Nut-Lock, NI |
| 19 | 94-1371 | 1 | Spacer |
| 20 | 323-42 | 1 | Screw-HH |
| 21 | 3256-24 | 1 | Washer-Flat |
| 22 | 104-8301 | 1 | Nut-HF, NI |
| 23 | 33115-016 | 1 | Screw-HH |
| 24 | 94-1300 | 1 | Lock-Neutral |
| 25 | 94-1386 | 1 | Shaft-Pedal |
| 26 | 2411-38 | 1 | Joint-Ball |
| 27 | 74-9100 | 1 | Pad-Pedal, Forward |
| 28 | 117-9507 | 1 | Pedal-Accelerator |
| 29 | 32121-45 | 1 | Pin-Spring |

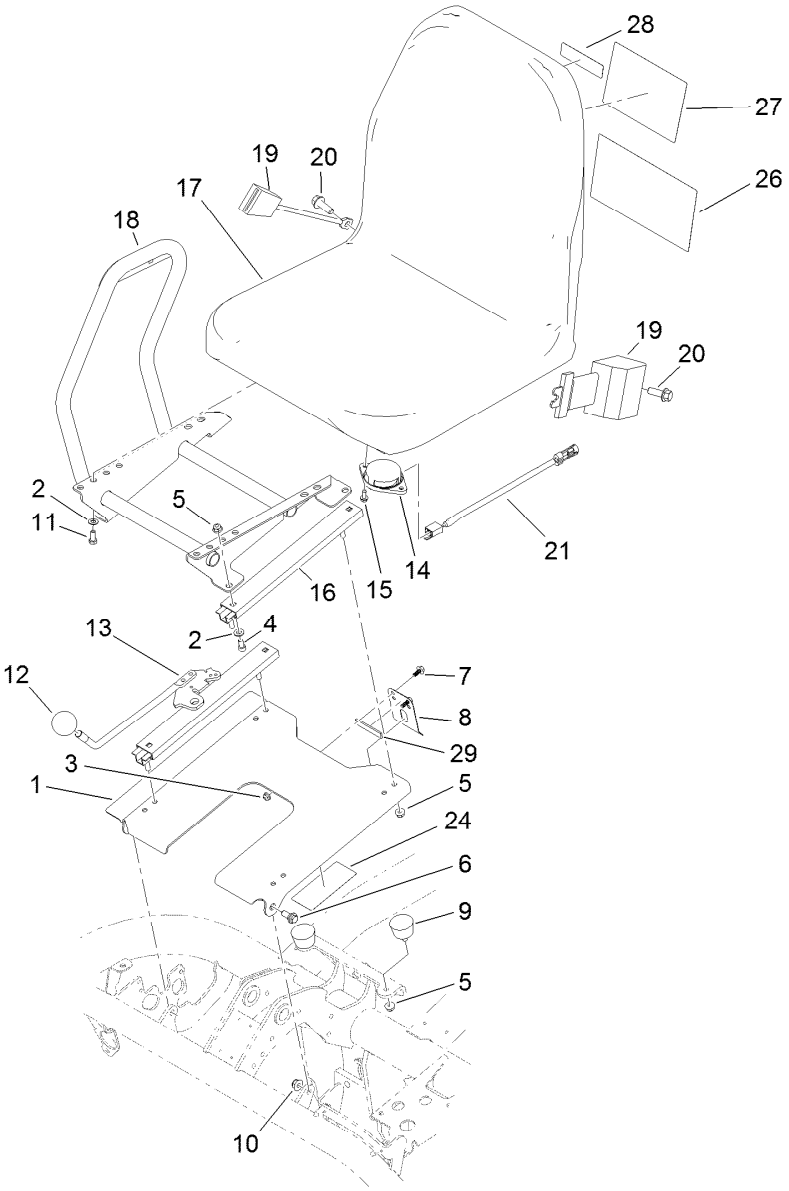


# Seatbase Assembly

| Ref. | Part Number | Qty. | Description |
|---|---|---|---|
| 1 | 117-4440-03 | 1 | Plate-Seat |
| 2 | 3256-23 | 8 | Washer-Plain |
| 3 | 104-7201 | 2 | Nut-HF |
| 4 | 3274-10 | 4 | Screw-HSH |
| 5 | 104-8300 | 10 | Nut-HF, NI |
| 6 | 94-7582 | 2 | Bolt-Shoulder |
| 7 | 99-6810 | 2 | Screw-HHF |
| 8 | 66-2630 | 1 | Latch-Seat |
| 9 | 68-3270 | 2 | Bumper-Rubber |
| 10 | 104-8301 | 2 | Nut-HF, NI |
| 11 | 322-3 | 4 | Screw-HH |
| 12 | 233-48 | 1 | Knob |
| 13 | 119-4483 | 1 | Seat Adjuster Lever ASM |
| 14 | 92-6282 | 1 | Switch-Seat |
| 15 | 32144-10 | 2 | Screw-HWH |
| 16 | 92-8990 | 1 | Adjuster-Slave |
| 17 | 104-4620 | 1 | Seat |
| 18 | 119-1721-03 | 1 | Mount-Console |
| 19 | 100-4928 | 1 | Belt-Seat |

| Ref. | Part Number | Qty. | Description |
|---|---|---|---|
| 20 | 117-9035 | 2 | Screw-HHF |
| 21 | 108-8657 | 1 | Harness-Wire, Seat |
| 24 | 115-8200 | 1 | Decal-Reference, Fuse |
| 26 | 115-8159 | 1 | Decal-Service, Spanish |
| 26 | 115-8160 | 1 | Decal-Service, French |
| 26 | 115-8161 | 1 | Decal-Service, German |
| 26 | 115-8162 | 1 | Decal-Service, Swedish |
| 26 | 115-8163 | 1 | Decal-Service, Italian |
| 26 | 115-8164 | 1 | Decal-Service, Portuguese |
| 26 | 115-8165 | 1 | Decal-Service, Norwegian |
| 26 | 115-8166 | 1 | Decal-Service, Finnish |
| 26 | 115-8167 | 1 | Decal-Service, Danish |
| 26 | 115-8168 | 1 | Decal-Service, Dutch |
| 26 | 115-8169 | 1 | Decal-Service, Japanese |
| 26 | 119-9345 | 1 | Decal-Aid, Quick Reference |
| 27 | 115-8156 | 1 | Decal-Speed, Clip |
| 28 | 117-2718 | 1 | Decal-Arrester, Spark |
| 29 | 120-5753 | 1 | Strip-Foam |

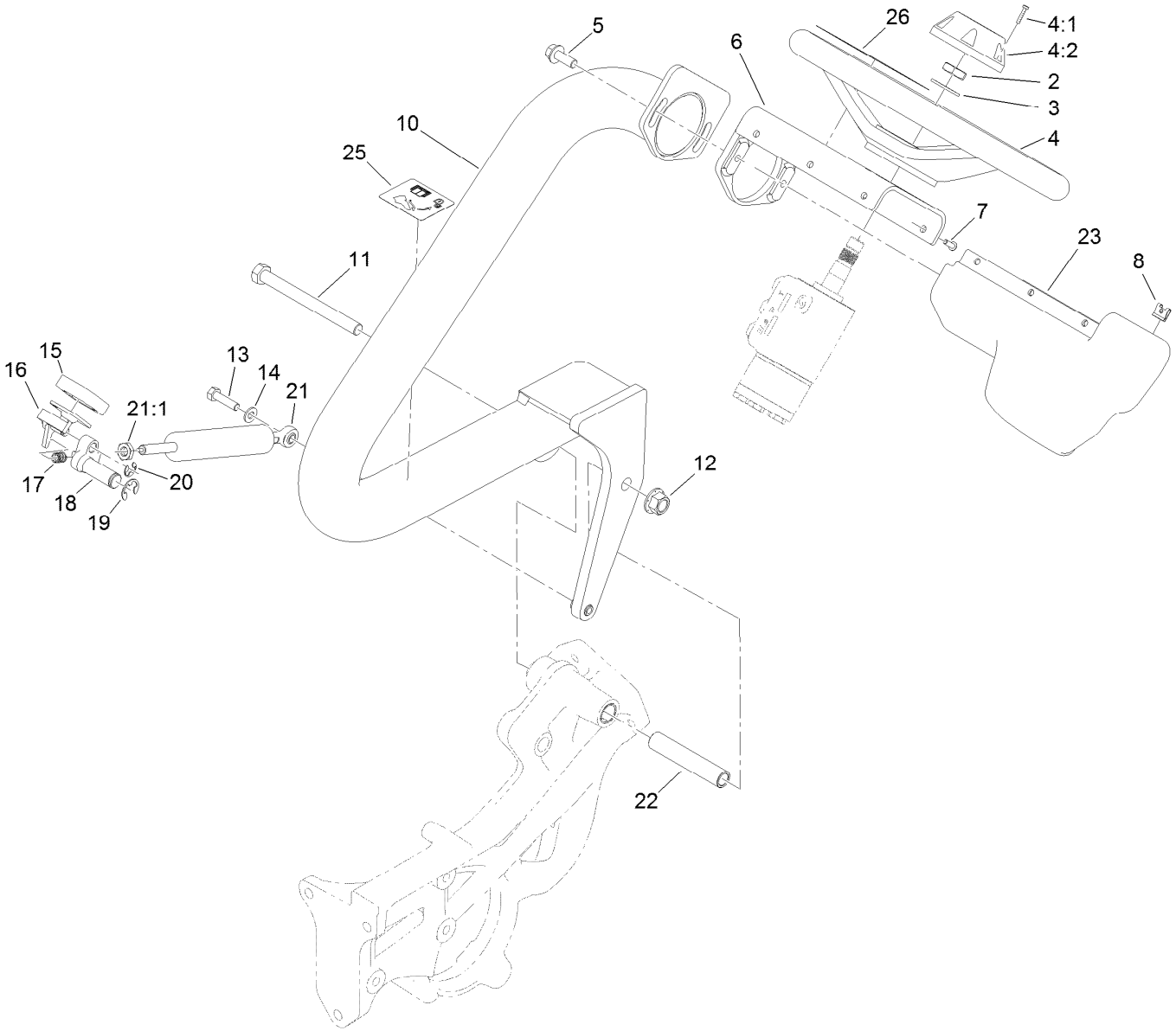


# Steering Arm and Adjuster Assembly

| Ref. | Part Number | Qty. | Description |
|---|---|---|---|
| 2 | 3296-33 | 1 | Nut-Lock, NI |
| 3 | 3256-27 | 1 | Washer-Flat |
| 4 | 75-0560 | 1 | Steering Wheel ASM |
| 4:1 | 32144-21 | 1 | Screw |
| 4:2 | 68-5140 | 1 | Cap-Wheel, Steering |
| 5 | 3234-42 | 2 | Screw-HHF |
| 6 | 117-9346-03 | 1 | Mount-Steering |
| 7 | 3274-39 | 6 | Screw-HSBH |
| 8 | 3290-277 | 6 | Nut-Speed |
| 10 | 117-4444-01 | 1 | Arm-Steering |
| 11 | 325-22 | 1 | Screw-HH |
| 12 | 99-5107 | 1 | Nut-Lock |
| 13 | 322-47 | 1 | Screw-HH |
| 14 | 3256-23 | 1 | Washer-Plain |

| Ref. | Part Number | Qty. | Description |
|---|---|---|---|
| 15 | 74-9110 | 1 | Pad-Pedal, Reverse |
| 16 | 117-4457 | 1 | Lever ASM |
| 17 | 106-9791 | 1 | Spring |
| 18 | 117-9024 | 1 | Lever-Pivot |
| 19 | 32120-19 | 1 | E-Ring |
| 20 | 105-7004 | 1 | E-Ring |
| 21 | 117-4447 | 1 | Cylinder-Gas |
| 21:1 | 112-8617 | 1 | Nut-Hex |
| 22 | 117-9002 | 1 | Spacer |
| 23 | 119-9300 | 1 | Cover-Valve, Steering |
| 25 | 119-9346 | 1 | Decal-Arm, Steering |
| 26 | 121-2641 | 1 | Decal-Danger |
| 26 | 121-2640 | 1 | Decal-Danger, CE |

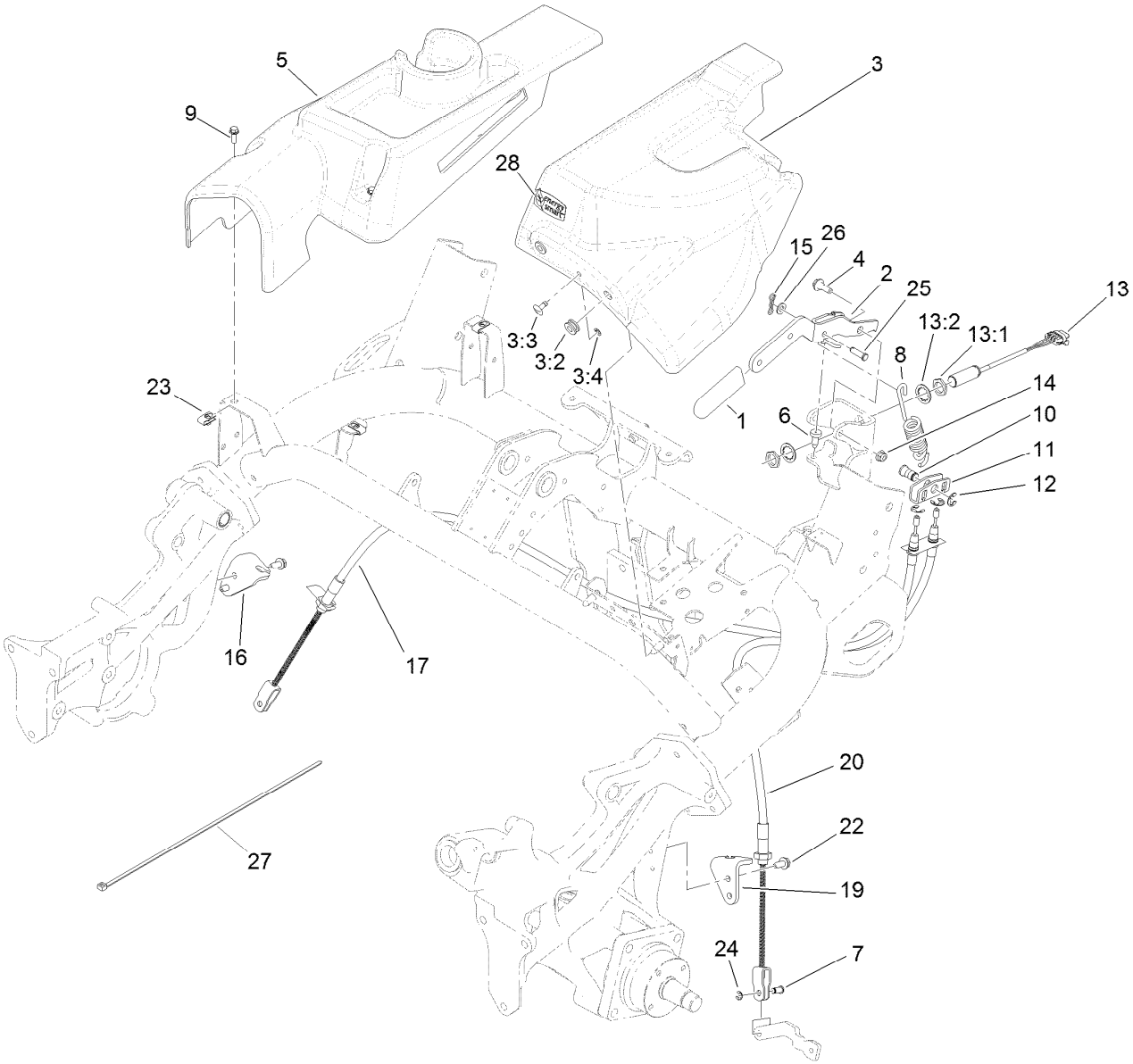


# Brake Cable and Lever Assembly

| Ref. | Part Number | Qty. | Description |
|---|---|---|---|
| 1 | 21-1880 | 1 | Grip-Handle |
| 2 | 119-2149-03 | 1 | Lever-Brake |
| 3 | 121-5868 | 1 | LH Cover ASM |
| 3:2 | 92-5972 | 2 | Grommet-Rubber |
| 3:3 | 119-1728 | 1 | Stud-1/4 Turn |
| 3:4 | 119-1729 | 1 | Retainer-Stud |
| 4 | 116-1297 | 2 | Screw-Shoulder |
| 5 | 119-1678 | 1 | Cover-Side, RH |
| 6 | 87-8460 | 1 | Bumper-Rubber |
| 7 | 109-6887 | 2 | Pin-Clevis |
| 8 | 119-2144 | 1 | Spring-Extention |
| 9 | 115-5103 | 3 | Screw-HHF |
| 10 | 119-2146 | 1 | Pin |
| 11 | 114-9994 | 1 | Bracket-Equalizer, Cable |
| 12 | 32120-47 | 3 | Ring-Retaining, External |
| 13 | 115-5300 | 1 | Proximity Switch ASM |

| Ref. | Part Number | Qty. | Description |
|---|---|---|---|
| 13:1 | 117-3207 | 2 | Nut-Hex |
| 13:2 | 117-3208 | 2 | Washer-Lock, Internal Tooth |
| 14 | 104-8300 | 2 | Nut-HF, NI |
| 15 | 119-1415 | 1 | Pin-Cotter, Locking |
| 16 | 115-5787 | 1 | Bracket-Brake Cable, RH |
| 17 | 115-9412 | 1 | Cable-Brake, RH |
| 19 | 114-9997 | 1 | Bracket-Brake Cable, LH |
| 20 | 114-9996 | 1 | Cable-Brake, LH |
| 22 | 32104-32 | 4 | Screw-HWH |
| 23 | 107069 | 3 | Clip |
| 24 | 701197 | 2 | E-Ring |
| 25 | 283-61 | 1 | Pin-Yoke |
| 26 | 3256-23 | 1 | Washer-Plain |
| 27 | 3290-379 | 1 | Tie-Cable |
| 28 | 119-7580 | 1 | Decal-Energy Smart |

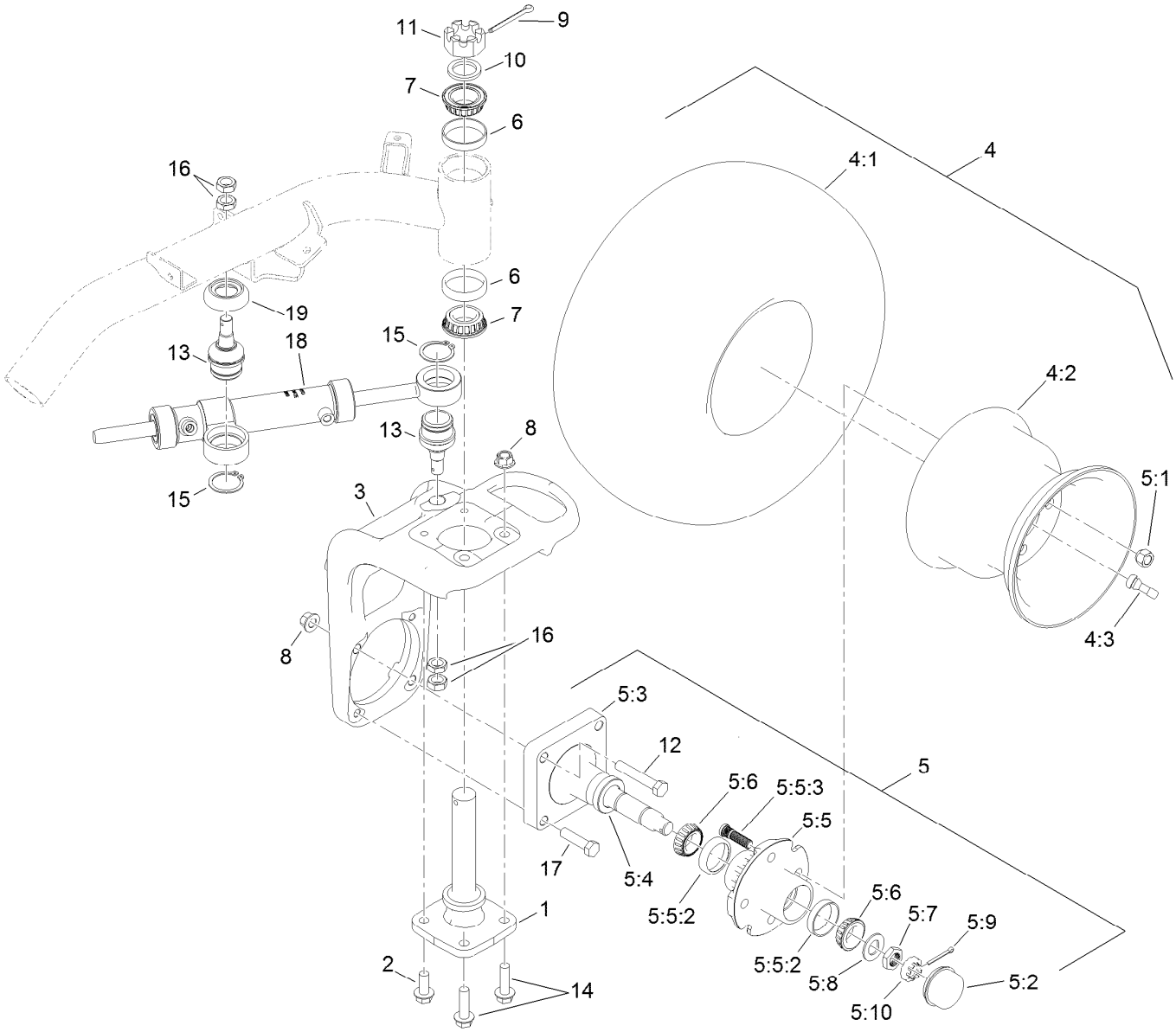


# Back Wheel Assembly

| Ref. | Part Number | Qty. | Description |
|---|---|---|---|
| 1 | 115-2657 | 1 | Spindle-Steering |
| 2 | 3234-38 | 2 | Screw-HHF |
| 3 | 117-4366-01 | 1 | Base-Fork, Rear |
| 4 | | 1 | Wheel And Tire ASM ● |
| 4:1 | 117-9031 | 1 | Tire |
| 4:2 | 217-60 | 1 | Rim |
| 4:3 | 232-27 | 1 | Stem-Valve |
| 5 | 119-4490 | 1 | Wheel Spindle ASM |
| 5:1 | 242-50 | 4 | Nut-Lug |
| 5:2 | 241-119 | 1 | Cap-Dust |
| 5:3 | 112-7173 | 1 | Spindle |
| 5:4 | 112-1690 | 1 | Seal-Oil |
| 5:5 | 117-9093 | 1 | Hub ASM |
| 5:5:2 | 254-72 | 2 | Bearing-Cup, Tapered |
| 5:5:3 | 114-3918 | 4 | Stud-Wheel |
| 5:6 | 254-94 | 2 | Bearing-Cone, Tapered |
| 5:7 | 117-8260 | 1 | Nut |

| Ref. | Part Number | Qty. | Description |
|---|---|---|---|
| 5:8 | 117-8259 | 1 | Washer-Spindle |
| 5:9 | 3272-18 | 1 | Pin-Cotter |
| 5:10 | 93-0307 | 1 | Nut-Lock, Retainer |
| 6 | 115-9471 | 2 | Bearing-Cup |
| 7 | 115-9472 | 2 | Bearing-Cone And Seal |
| 8 | 99-5107 | 4 | Nut-Lock |
| 9 | 3272-37 | 1 | Pin-Cotter |
| 10 | 18-6320 | 1 | Washer-Steering |
| 11 | 32136-9 | 1 | Nut-Hex, Slotted |
| 12 | 325-12 | 2 | Screw-HH |
| 13 | 117-9875 | 2 | Joint-Ball |
| 14 | 3234-22 | 2 | Screw-HHF |
| 15 | 32151-104 | 2 | Ring-Retaining, External |
| 16 | 3220-6 | 4 | Nut-Jam |
| 17 | 325-8 | 2 | Screw-HH |
| 18 | 117-4480 | 1 | HYD Cylinder ASM |
| 19 | 120-2026 | 1 | Spacer-Cylinder |

● Not serviced separately

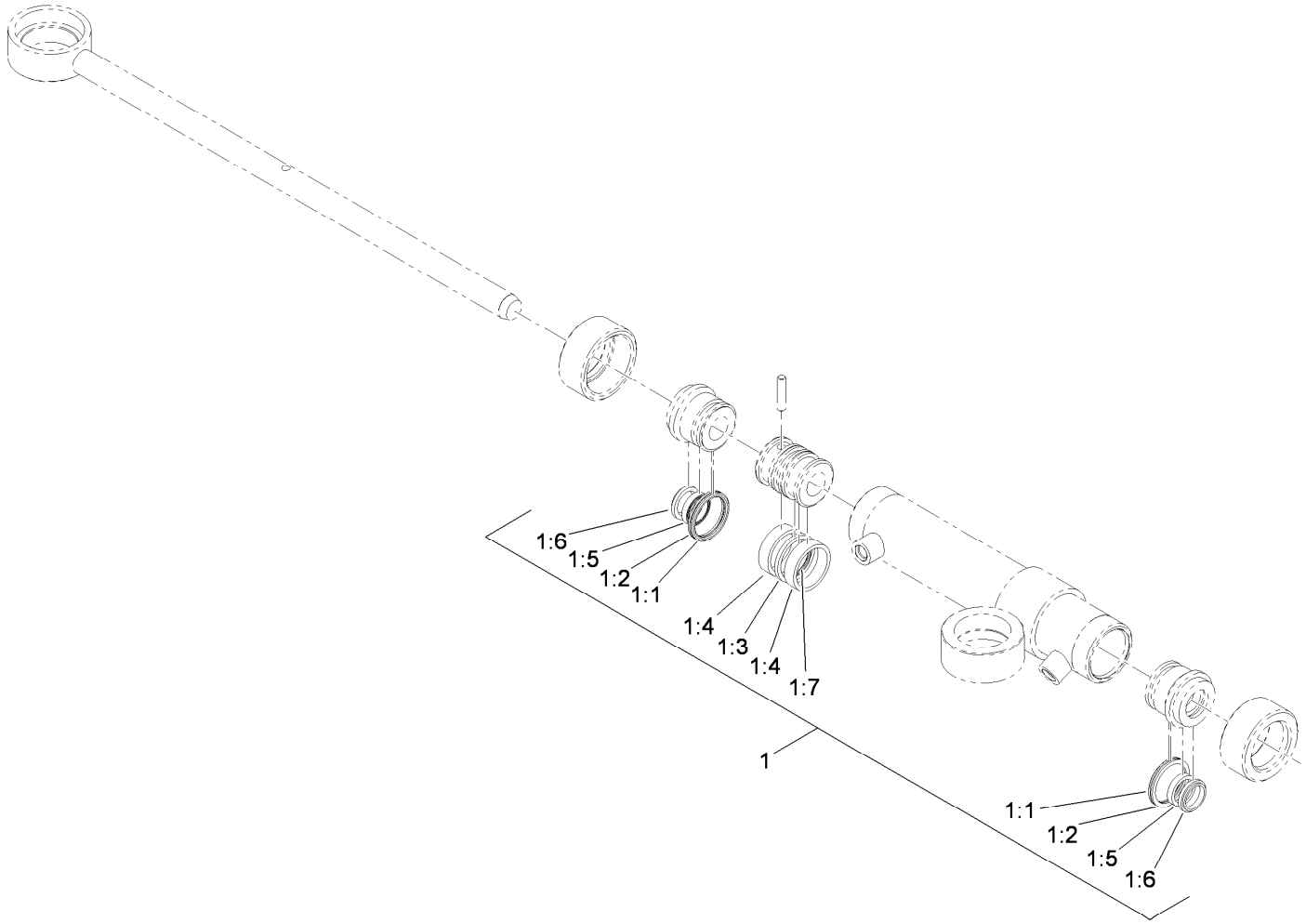


# Hydraulic Cylinder Assembly No. 117-4480

| *Ref.* | *Part Number* | *Qty.* | *Description* |
|---|---|---|---|
| 1 | 119-7124 | 1 | Kit-Seal |
| 1:1 | | 2 | O-Ring ● |
| 1:2 | | 2 | Ring-Backup ● |
| 1:3 | | 1 | Seal-Psp ● |
| 1:4 | | 2 | Ring-Wear ● |
| 1:5 | | 2 | Seal-Bs ● |
| 1:6 | | 2 | Seal-Dust ● |
| 1:7 | | 1 | O-Ring ● |

● Not serviced separately

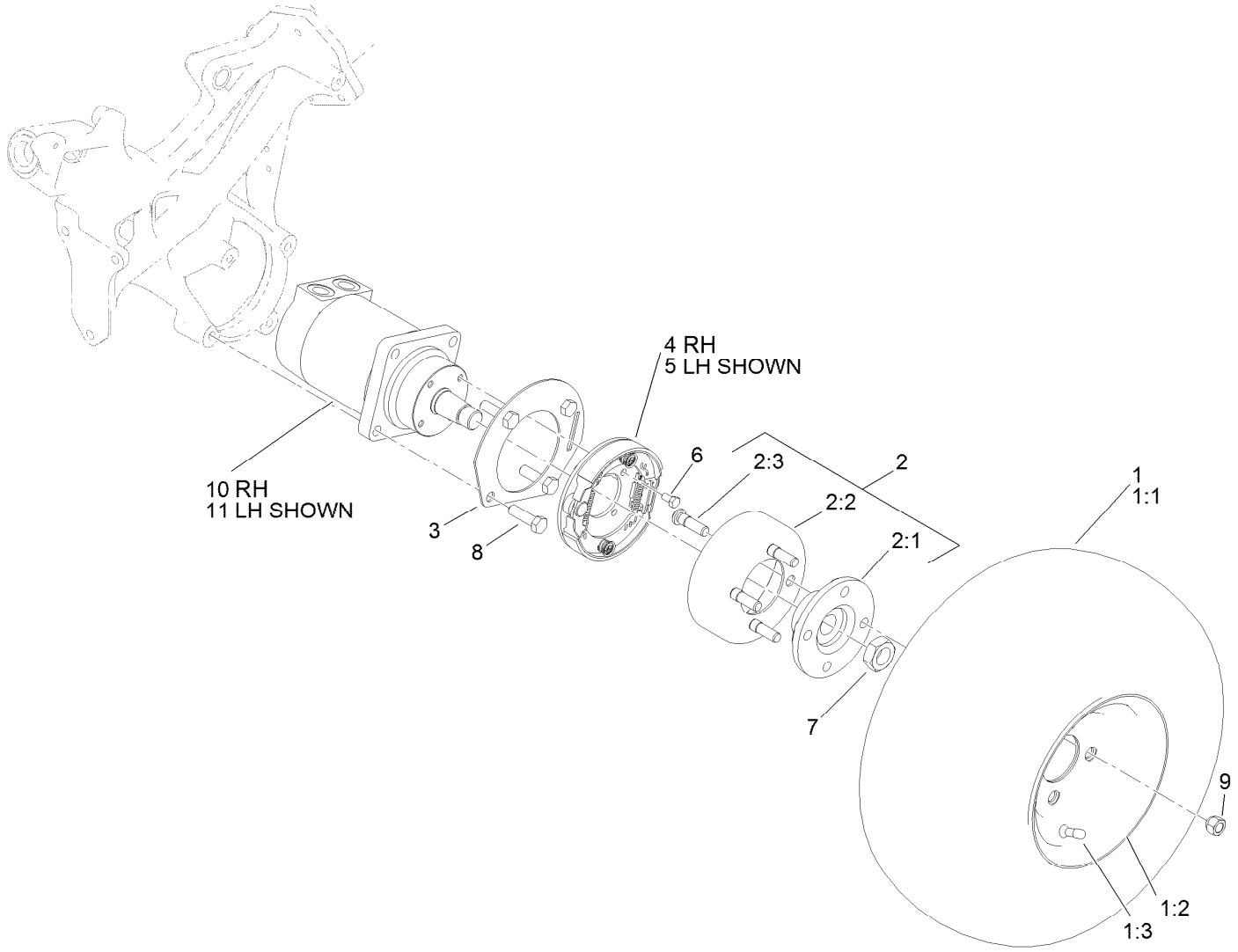


# Front Wheel Assembly

| Ref. | Part Number | Qty. | Description |
|---|---|---|---|
| 1 | | 2 | Wheel And Tire ASM ● |
| 1:1 | 117-9031 | 1 | Tire |
| 1:2 | 117-9032 | 1 | Rim |
| 1:3 | 232-27 | 1 | Stem-Valve |
| 2 | 115-2661 | 2 | Brake Drum ASM |
| 2:1 | 115-2662-03 | 1 | Hub-Wheel |
| 2:2 | 115-2663 | 1 | Drum-Brake |
| 2:3 | 85-6540 | 4 | Stud-Drive |
| 3 | 114-9998-03 | 2 | Tab-Lever, Brake |

| Ref. | Part Number | Qty. | Description |
|---|---|---|---|
| 4 | 115-9441 | 1 | RH Brake ASM |
| 5 | 115-9440 | 1 | LH Brake ASM |
| 6 | 322-2 | 8 | Screw-HH |
| 7 | 26-3790 | 2 | Nut-Lock |
| 8 | 325-7 | 8 | Screw-HH |
| 9 | 242-50 | 8 | Nut-Lug |
| 10 | 117-4302 | 1 | RH Wheel Motor ASM |
| 11 | 117-4303 | 1 | LH Wheel Motor ASM |

● Not serviced separately

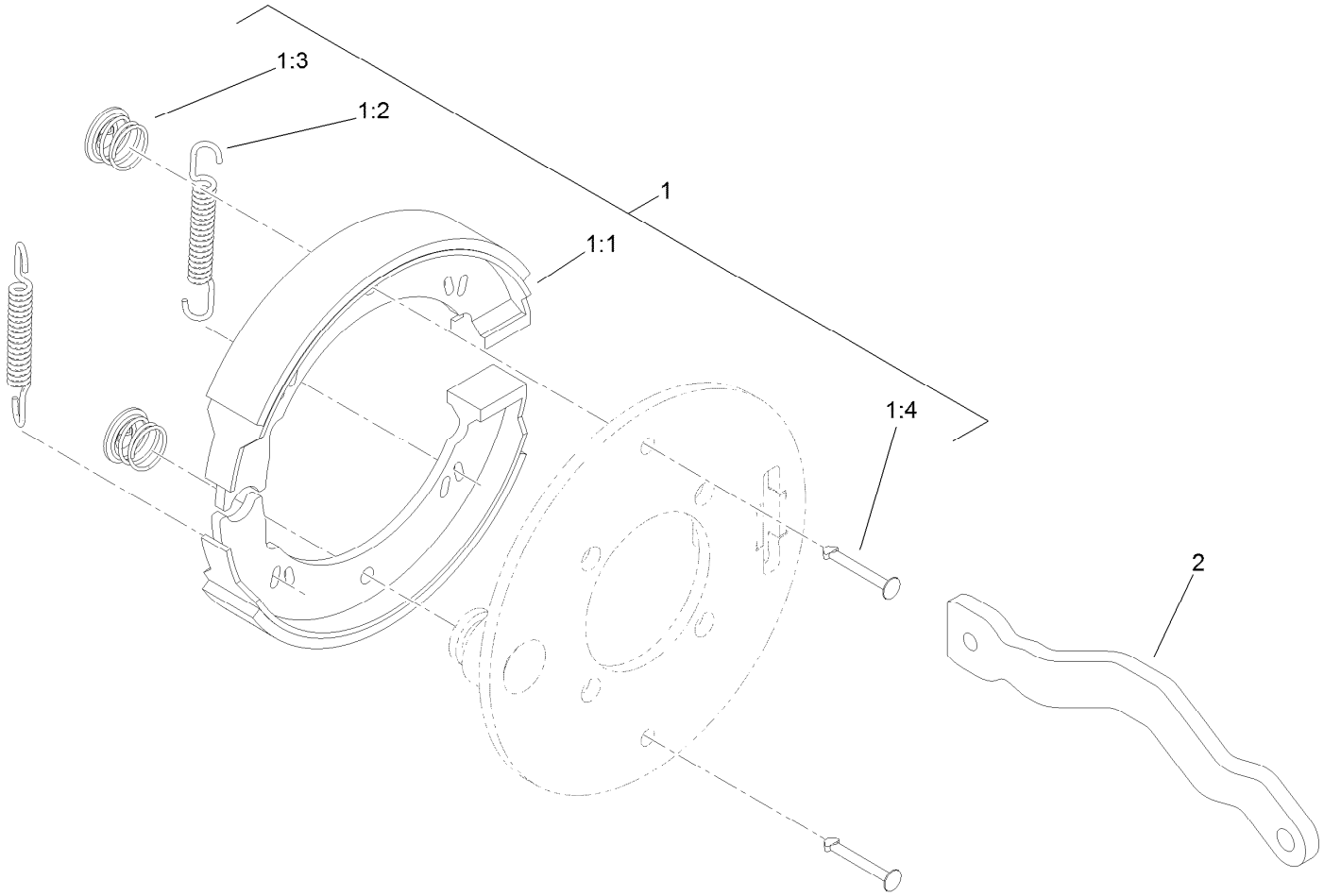


# Right Hand Brake Assembly No. 115-9441

| *Ref.* | *Part Number* | *Qty.* | *Description* |
|---|---|---|---|
| 1 | 119-7136 | 1 | Kit-Brake |
| 1:1 | | 2 | Shoe-Brake ● |
| 1:2 | | 2 | Spring ● |
| 1:3 | | 2 | Clip ● |
| 1:4 | | 2 | Pin-Retainer ● |
| 2 | 115-5789 | 1 | Lever-Brake, RH |

● Not serviced separately

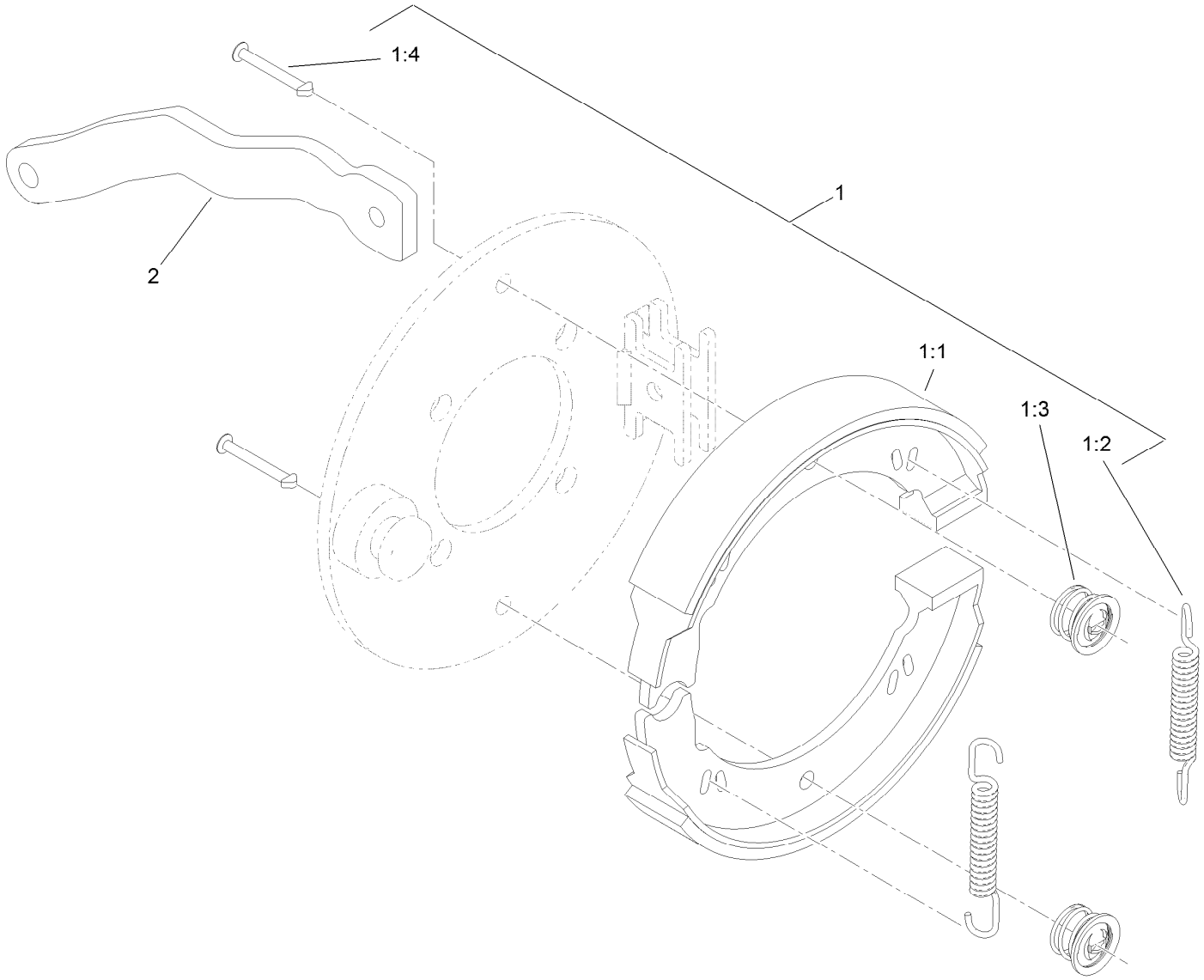


# Left Hand Brake Assembly No. 115-9440

| *Ref.* | *Part Number* | *Qty.* | *Description* |
|---|---|---|---|
| 1 | 119-7136 | 1 | Kit-Brake |
| 1:1 | | 2 | Shoe-Brake ● |
| 1:2 | | 2 | Spring ● |
| 1:3 | | 2 | Clip ● |
| 1:4 | | 2 | Pin-Retainer ● |
| 2 | 115-2664 | 1 | Lever-Brake, LH |

● Not serviced separately

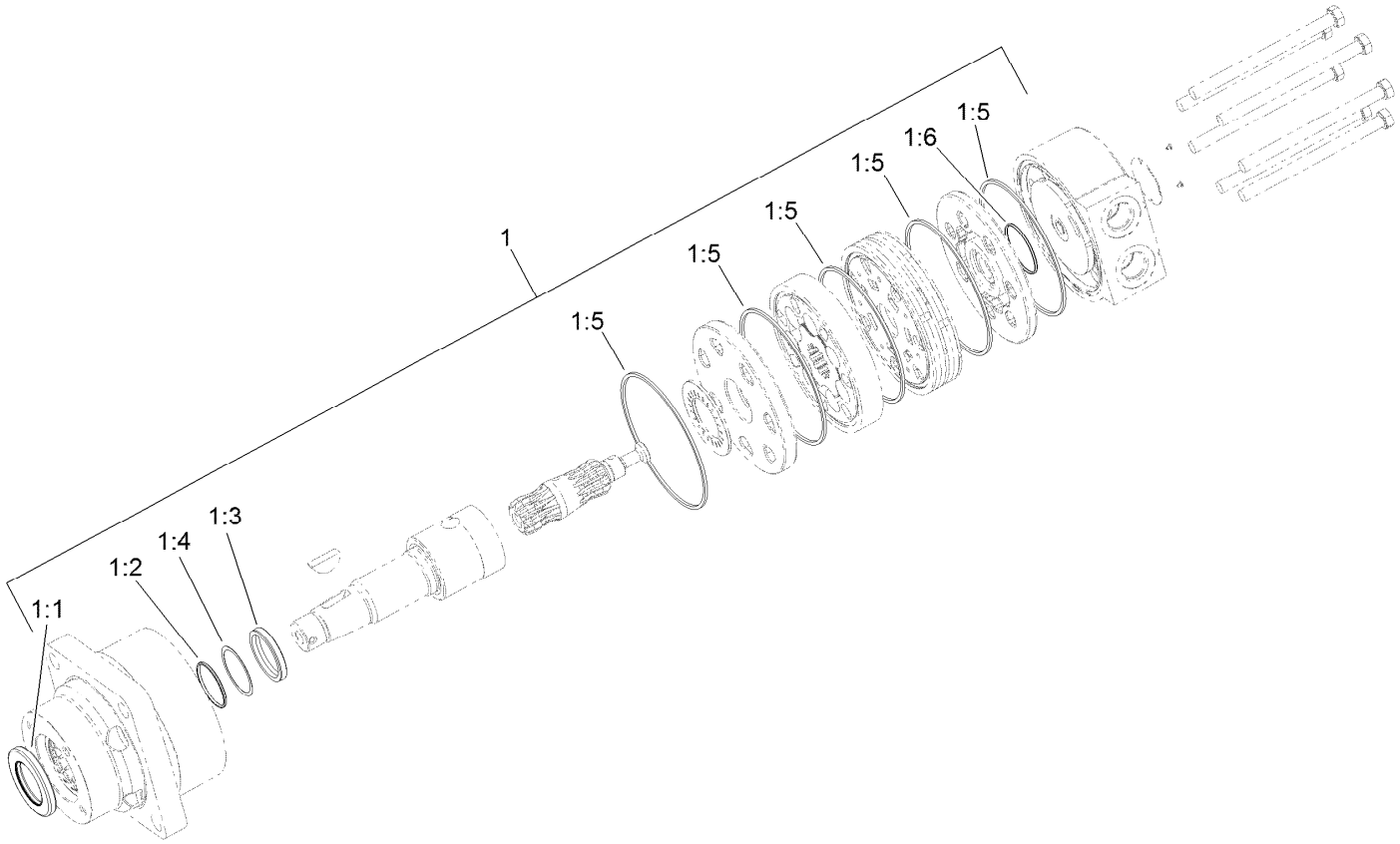


# Right Hand Wheel Motor Assembly No. 117-4302

| *Ref.* | *Part Number* | *Qty.* | *Description* |
|---|---|---|---|
| 1 | 94-8178 | 1 | Seal Kit |
| 1:1 | | 1 | Seal-Dirt And Water ● |
| 1:2 | | 1 | Backup-Ring ● |
| 1:3 | | 1 | Seal-Shaft ● |
| 1:4 | | 1 | Washer-Backup ● |
| 1:5 | | 5 | Seal-Square, Ring (Inner) ● |
| 1:6 | | 1 | Seal-Commutator ● |

● Not serviced separately

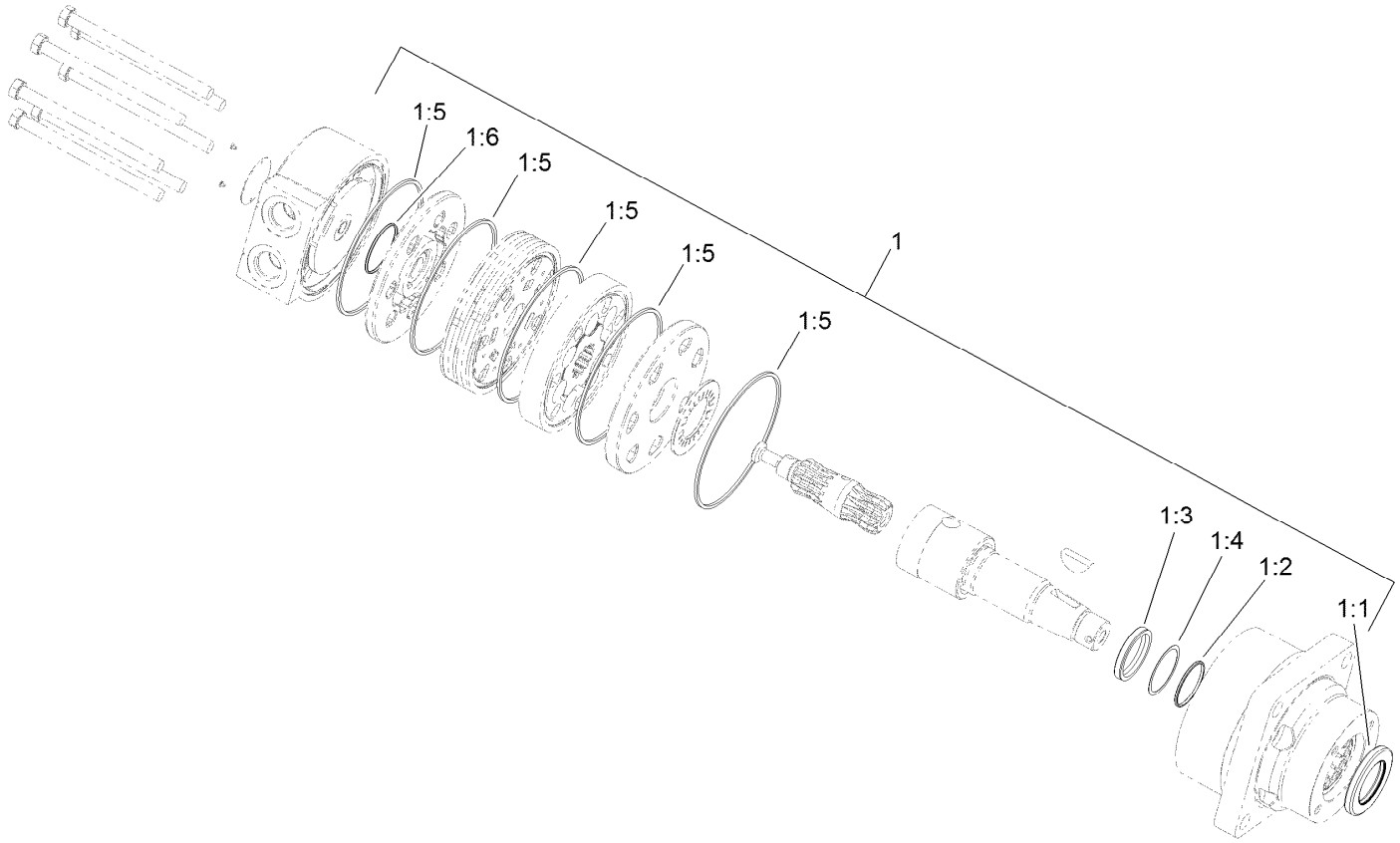


# Left Hand Wheel Motor Assembly No. 117-4303

| *Ref.* | *Part Number* | *Qty.* | *Description* |
|---|---|---|---|
| 1 | 94-8178 | 1 | Seal Kit |
| 1:1 | | 1 | Seal-Dirt And Water ● |
| 1:2 | | 1 | Backup-Ring ● |
| 1:3 | | 1 | Seal-Shaft ● |
| 1:4 | | 1 | Washer-Backup ● |
| 1:5 | | 5 | Seal-Square, Ring (Inner) ● |
| 1:6 | | 1 | Seal-Commutator ● |

● Not serviced separately

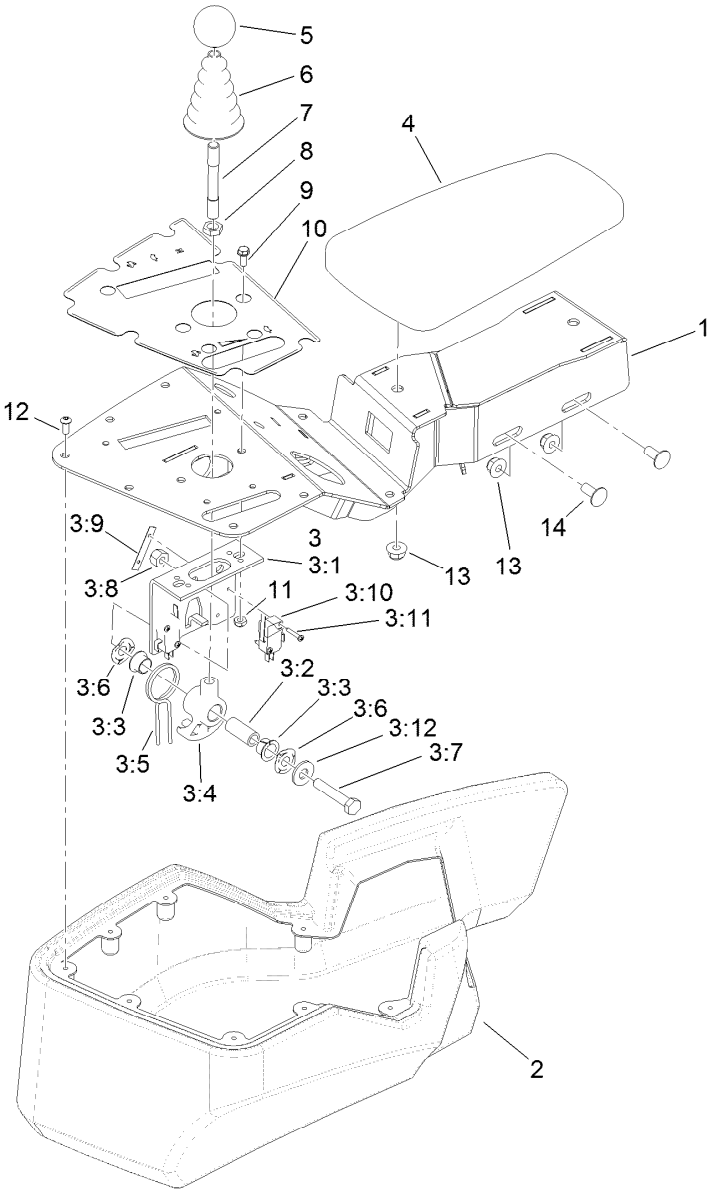


# Console and Reel Control Assembly

| Ref. | Part Number | Qty. | Description |
|---|---|---|---|
| 1 | 120-2048-03 | 1 | Console |
| 2 | 121-5152 | 1 | Cover-Console |
| 3 | 106-4167 | 1 | Joystick Bracket ASM |
| 3:1 | 115-5357-03 | 1 | Bracket-Joystick |
| 3:2 | 106-4192 | 1 | Spacer |
| 3:3 | 93-5547 | 2 | Bushing-Nylon |
| 3:4 | 105-7507 | 1 | Hub-Pivot, Joystick |
| 3:5 | 105-8289 | 1 | Spring-Torsion |
| 3:6 | 106-4193 | 2 | Washer-Finger, Spring |
| 3:7 | 322-9 | 1 | Screw-HH |
| 3:8 | 3296-29 | 1 | Nut-Lock, NI |
| 3:9 | 3290-354 | 2 | Nut-Speed |
| 3:10 | 108-6496 | 2 | Switch (W/Boot) |

| Ref. | Part Number | Qty. | Description |
|---|---|---|---|
| 3:11 | 95-3003 | 4 | Screw-PPHTF |
| 3:12 | 3256-3 | 1 | Washer-Flat |
| 4 | 108-7602 | 1 | Rest-Arm |
| 5 | 120-9752 | 1 | Knob-Round, Yellow |
| 6 | 93-5961 | 1 | Boot-Lever |
| 7 | 105-8288 | 1 | Rod-Joystick |
| 8 | 3218-3 | 1 | Nut-Jam |
| 9 | 3290-321 | 2 | Screw-HWH |
| 10 | 121-5169 | 1 | Decal-Console |
| 11 | 3296-12 | 2 | Nut-Lock, NI |
| 12 | 115-9830 | 8 | Screw-HSBH |
| 13 | 104-8300 | 4 | Nut-HF, NI |
| 14 | 3230-23 | 2 | Screw-CARR |

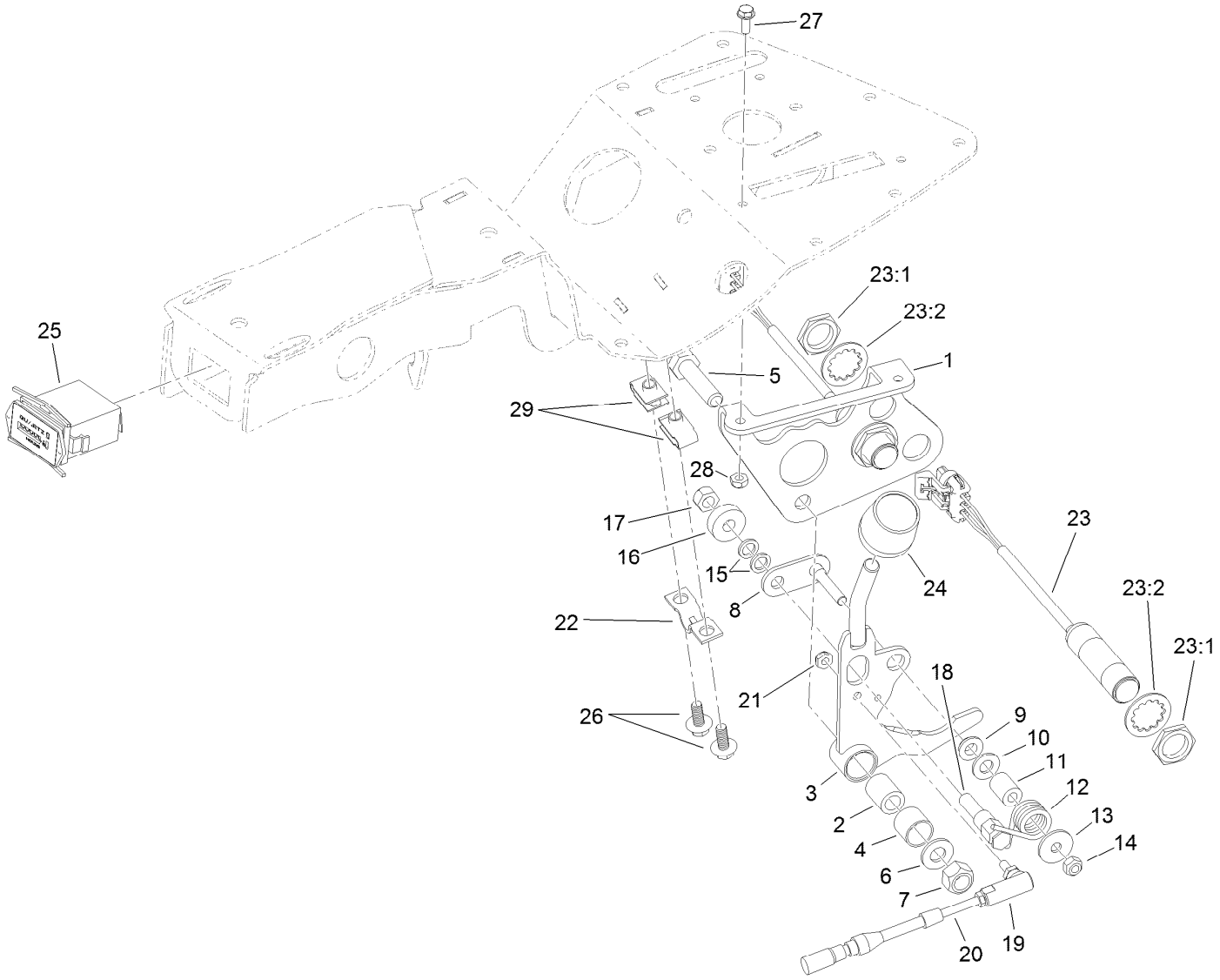


# Traction Interface Control Assembly

| Ref. | Part Number | Qty. | Description |
|---|---|---|---|
| 1 | 115-9774-03 | 1 | Bracket-Function, Lever |
| 2 | 94-1378 | 1 | Tube-Pivot, Handle |
| 3 | 115-9772 | 1 | Handle ASM |
| 4 | 256-311 | 1 | Bushing-Split |
| 5 | 33115-040 | 1 | Screw-HH |
| 6 | 3256-24 | 1 | Washer-Flat |
| 7 | 33025-00 | 1 | Nut-Lock, NI |
| 8 | 120-3198 | 1 | Roller-Pivot |
| 9 | 94-9619 | 1 | Bushing |
| 10 | 3256-23 | 1 | Washer-Plain |
| 11 | 94-9618 | 1 | Spacer-Spring |
| 12 | 94-9620 | 1 | Spring-Torsion |
| 13 | 3256-67 | 1 | Washer-Flat |
| 14 | 33023-00 | 1 | Nut-Lock |
| 15 | 75-5470 | 2 | Spacer-Bearing |
| 16 | 251-259 | 1 | Bearing-Ball |

| Ref. | Part Number | Qty. | Description |
|---|---|---|---|
| 17 | 33024-00 | 1 | Nut-Lock, NI |
| 18 | 94-9617 | 1 | Pin-Spring |
| 19 | 2411-38 | 1 | Joint-Ball |
| 20 | 119-1653 | 1 | Cable-Lock, Nuetral |
| 21 | 3296-27 | 1 | Nut-Lock, NI |
| 22 | 93-2279 | 1 | Clamp-Cable |
| 23 | 115-5300 | 2 | Proximity Switch ASM |
| 23:1 | 117-3207 | 2 | Nut-Hex |
| 23:2 | 117-3208 | 2 | Washer-Lock, Internal Tooth |
| 24 | 120-9753 | 1 | Knob-Cylindrical, Orange |
| 25 | 1-513374 | 1 | Meter-Hour |
| 26 | 99-6810 | 2 | Screw-HHF |
| 27 | 3290-321 | 2 | Screw-HWH |
| 28 | 3296-12 | 2 | Nut-Lock, NI |
| 29 | 107069 | 2 | Clip |

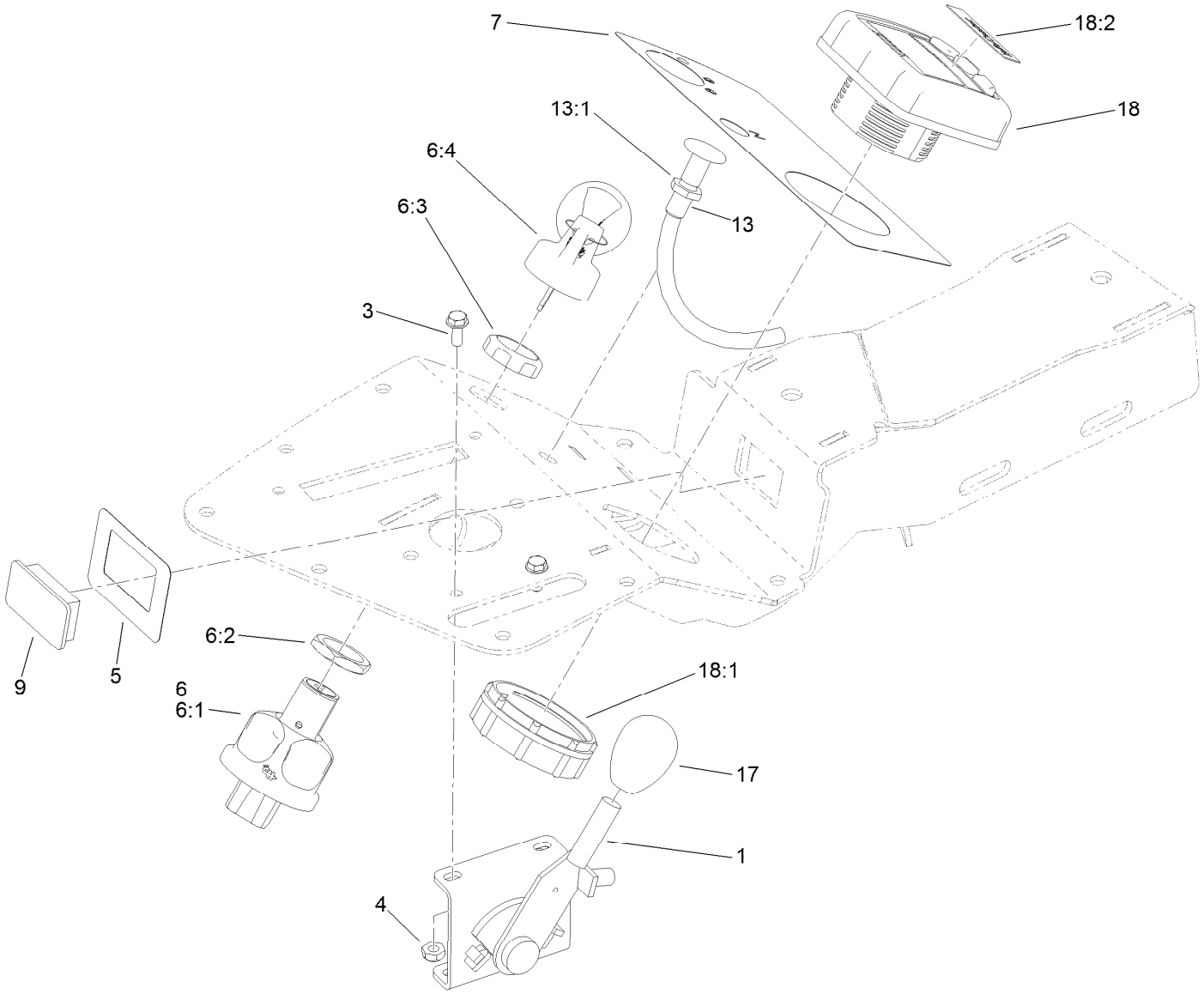


# Ignition, Throttle and Choke Control Assembly

| Ref. | Part Number | Qty. | Description |
|---|---|---|---|
| 1 | 119-1652 | 1 | Throttle ASM |
| 3 | 3290-321 | 2 | Screw-HWH |
| 4 | 3296-12 | 2 | Nut-Lock, NI |
| 5 | 121-5172 | 1 | Decal-Lights, Console |
| 6 | 121-5159 | 1 | Ignition Switch ASM |
| 6:1 | | 1 | Switch-Ignition ● |
| 6:2 | 121-5160 | 1 | Nut-Hex |
| 6:3 | 121-5161 | 1 | Nut-Face |
| 6:4 | 121-6673 | 1 | Key Set-Ignition |

| Ref. | Part Number | Qty. | Description |
|---|---|---|---|
| 7 | 121-5171 | 1 | Decal-Console |
| 9 | 99-7420 | 1 | Plug-Hole |
| 13 | 119-1651 | 1 | Control-Choke |
| 13:1 | 3220-3 | 1 | Nut-HJ |
| 17 | 120-9751 | 1 | Knob-Oval, Black |
| 18 | 120-6310 | 1 | LCD Display ASM |
| 18:1 | 120-4630 | 1 | Nut-Display |
| 18:2 | 120-6311 | 1 | Decal-Display |

● Not serviced separately

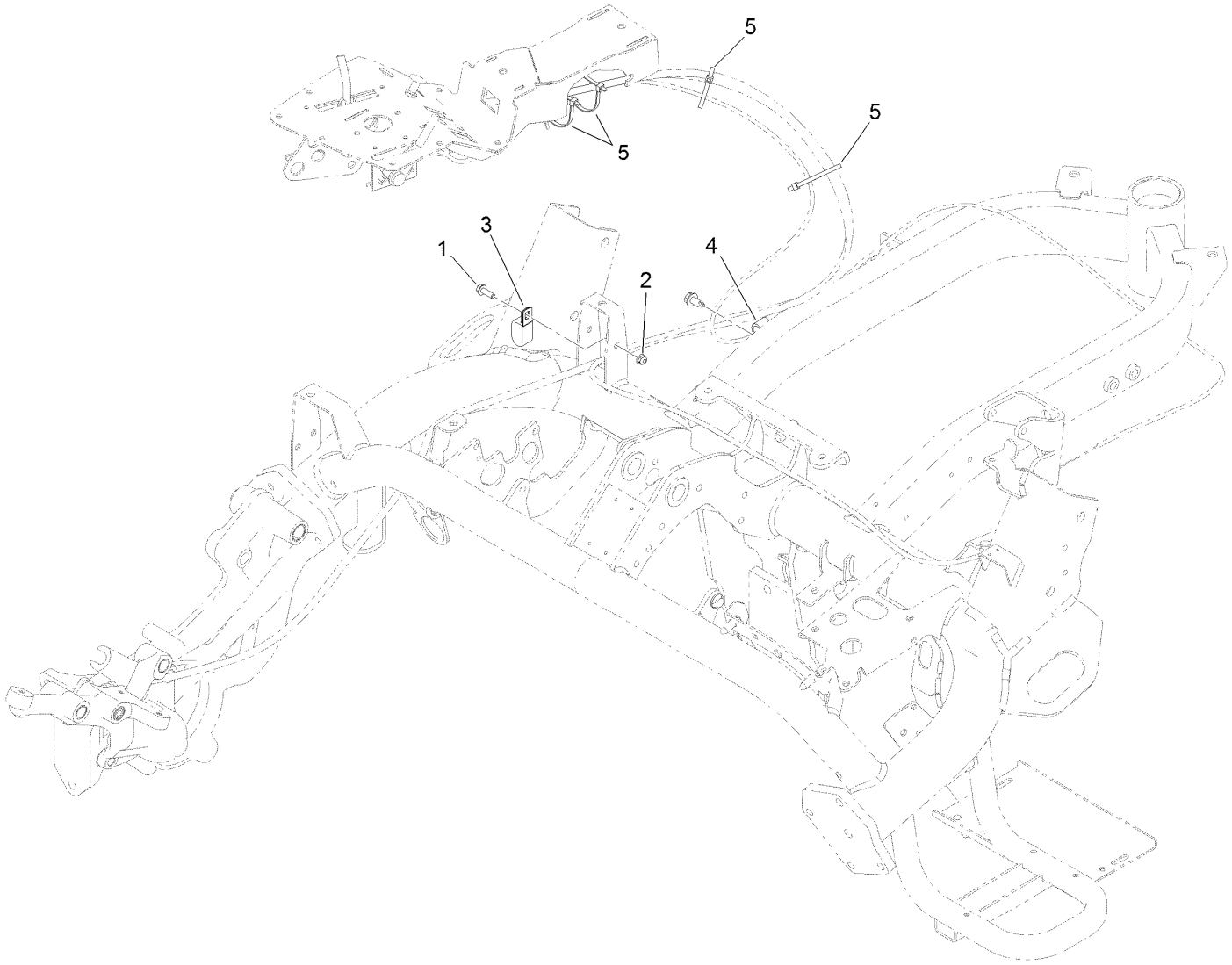


# Console Cable Routing Assembly

| *Ref.* | *Part Number* | *Qty.* | *Description* |
|---|---|---|---|
| 1 | 115-5103 | 1 | Screw-HHF |
| 2 | 104-7201 | 1 | Nut-HF |
| 3 | 119-8153 | 1 | Clamp-R, Double Tube |
| 4 | 92-6064 | 1 | Clamp-R |
| 5 | 3290-379 | 4 | Tie-Cable |

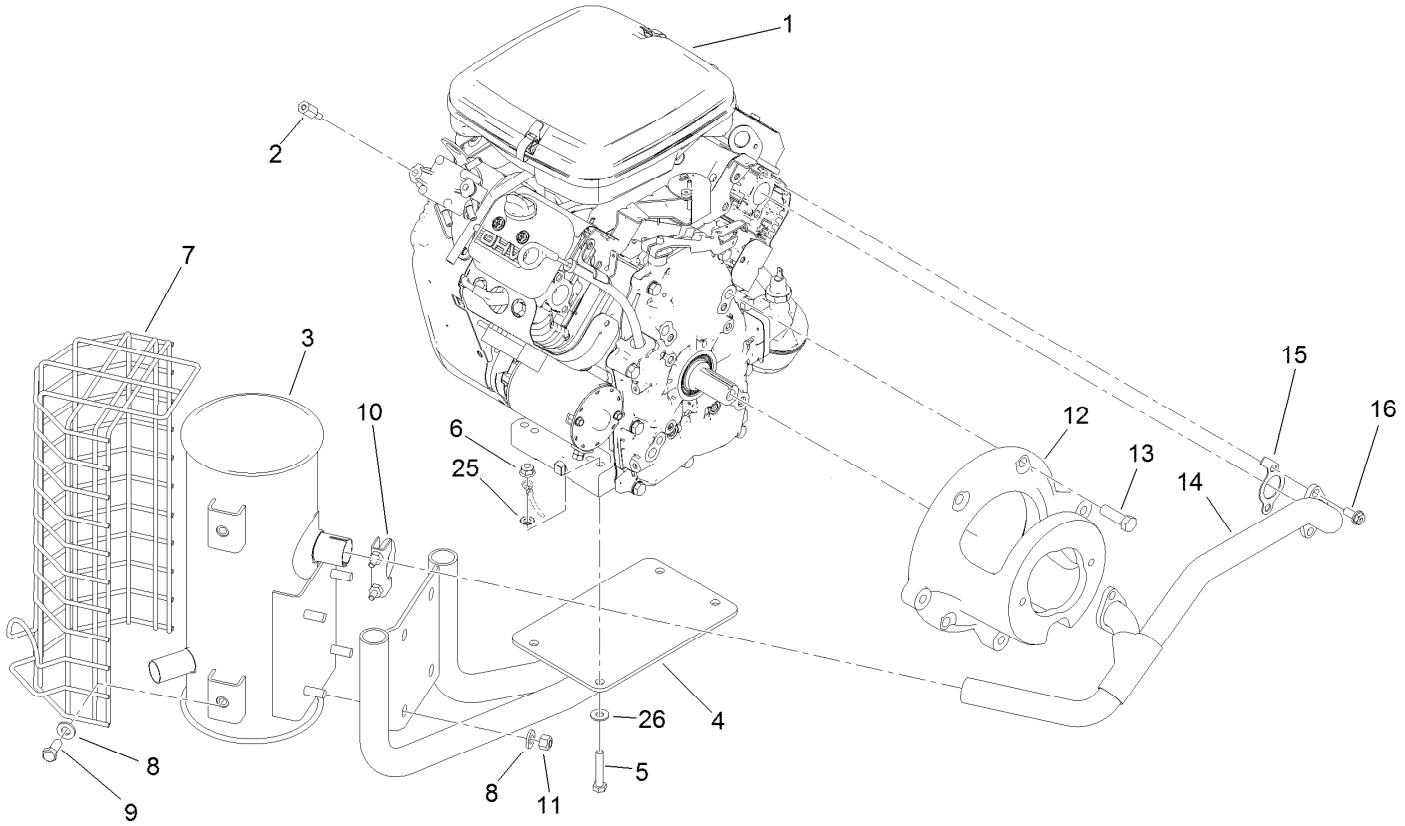


# Engine and Exhaust Assembly

| Ref. | Part Number | Qty. | Description |
|---|---|---|---|
| 1 | 121-6662 | 1 | Engine-Briggs&stratton, 385447-0208 ■ |
| 1:1 | 107-7817 | 1 | Filter-Oil, Engine ● |
| 2 | 121-5179 | 1 | Screw-Spacer |
| 3 | 110-4001 | 1 | Muffler |
| 4 | 117-4364-03 | 1 | Mount-Muffler |
| 5 | 322-10 | 4 | Screw-HH |
| 6 | 104-8300 | 4 | Nut-HF, NI |
| 7 | 112-0291 | 1 | Shield-Muffler |
| 8 | 100-4852 | 8 | Washer-Hardened |

| Ref. | Part Number | Qty. | Description |
|---|---|---|---|
| 9 | 323-5 | 4 | Screw-HH |
| 10 | 2112-11 | 1 | Clamp-Muffler |
| 11 | 32152-2 | 4 | Nut-Lock, Cone |
| 12 | 117-4363-03 | 1 | Mount-Pump |
| 13 | 324-32 | 4 | Screw-HH |
| 14 | 117-4379 | 1 | Exhaust Manifold ASM |
| 15 | 115-8154 | 2 | Gasket-Manifold, Exhaust |
| 16 | 94-5300 | 4 | Screw-HHF |
| 25 | 3255-8 | 1 | Washer-Lock |
| 26 | 87-8640 | 4 | Washer-Flat |

● Not illustrated

■ Obtain parts from www.briggsandstratton.com

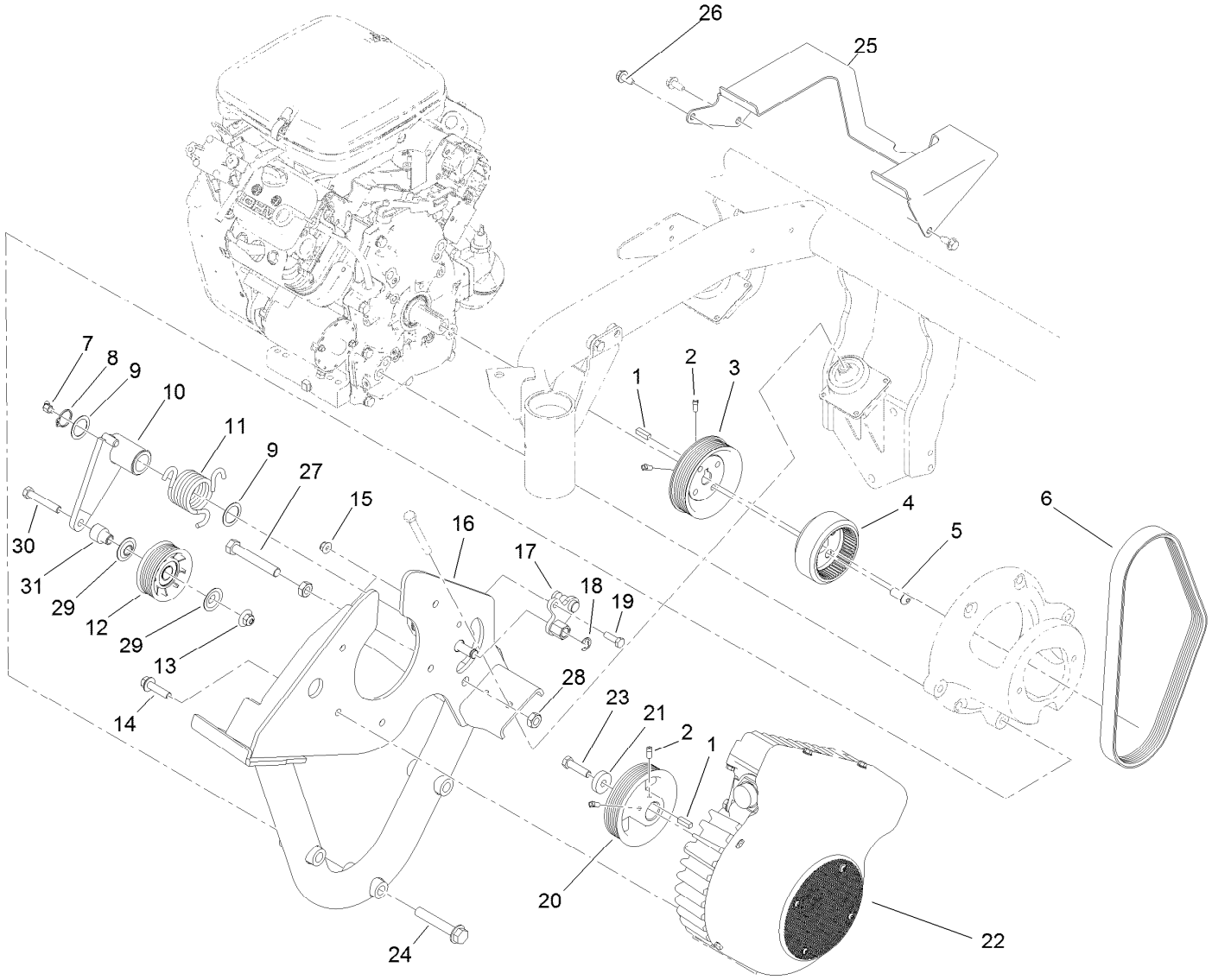


# Generator and Engine Frame Assembly

| Ref. | Part Number | Qty. | Description |
|---|---|---|---|
| 1 | 10-7070 | 2 | Key-Square |
| 2 | 3241-7 | 4 | Screw-SQH |
| 3 | 117-4449 | 1 | Pulley-Engine |
| 4 | 119-4484 | 1 | Coupling |
| 5 | 119-8195 | 4 | Screw-HSBH |
| 6 | 117-4406 | 1 | Belt-V |
| 7 | 302-11 | 1 | Fitting-Lube, 45 DEG |
| 8 | 32151-36 | 1 | Ring-Retaining |
| 9 | 74-1810 | 2 | Washer |
| 10 | 117-9292 | 1 | Idler Bracket ASM |
| 11 | 117-9282 | 1 | Spring-Torsion |
| 12 | 120-5766 | 1 | Pulley ASM |
| 13 | 109-6658 | 1 | Nut-Flange, NI |
| 14 | 114-4681 | 5 | Screw-HHF |
| 15 | 104-8300 | 1 | Nut-HF, NI |
| 16 | 117-4423-03 | 1 | Frame-Engine |

| Ref. | Part Number | Qty. | Description |
|---|---|---|---|
| 17 | 117-9289 | 1 | Spring Adjust ASM |
| 18 | 32120-47 | 1 | Ring-Retaining, External |
| 19 | 322-5 | 1 | Screw-HH |
| 20 | 115-9806 | 1 | Pulley-Generator |
| 21 | 117-3657 | 1 | Spacer |
| 22 | 117-8185 | 1 | Generator/Controller ASM |
| 23 | 3211-6 | 1 | Screw-HH |
| 24 | 3234-40 | 3 | Screw-HF |
| 25 | 115-8197-03 | 1 | Shield-Belt |
| 26 | 32104-32 | 1 | Screw-HWH |
| 27 | 325-13 | 1 | Screw-HH |
| 28 | 3218-5 | 2 | Nut-Jam |
| 29 | 120-5757 | 2 | Washer-Flange |
| 30 | 323-11 | 1 | Screw-HH |
| 31 | 120-2009 | 1 | Spacer-Pulley, Idler |

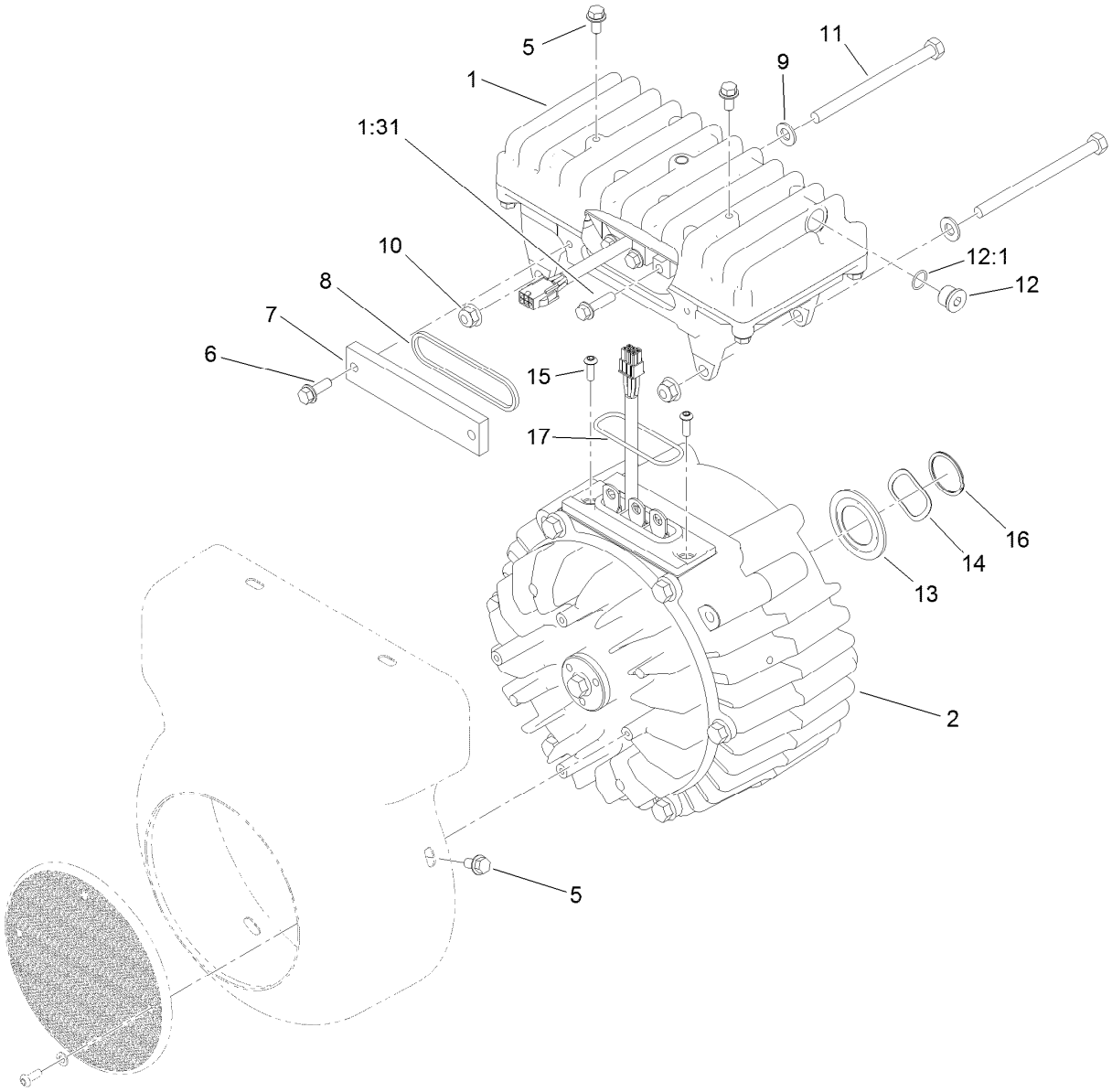


# Generator/Controller Assembly No. 117-8185

| Ref. | Part Number | Qty. | Description |
|---|---|---|---|
| 1 | 117-8181 | 1 | Controller ASM |
| 1:31 | 120-4654 | 3 | Screw-HHF |
| 2 | 117-8182 | 1 | Generator ASM |
| 5 | 119-1065 | 6 | Screw-HWH |
| 6 | 119-1138 | 2 | Screw-HWH |
| 7 | 120-4511 | 1 | Cover-Access |
| 8 | 120-4513 | 1 | Gasket-Cover, Access |
| 9 | 3256-23 | 2 | Washer-Plain |
| 10 | 104-8300 | 2 | Nut-HF, NI |

| Ref. | Part Number | Qty. | Description |
|---|---|---|---|
| 11 | 322-38 | 2 | Screw-HH |
| 12 | 353-989 | 1 | Plug-Hex, Hollow |
| 12:1 | 237-42 | 1 | O-Ring |
| 13 | 115-3299 | 1 | Seal-Flocked |
| 14 | 117-8147 | 1 | Washer-Wave |
| 15 | 119-7568 | 2 | Screw-HSBH |
| 16 | 112-9607 | 1 | Ring-Retaining, Spiral (EXT) |
| 17 | 117-8176 | 1 | O-Ring |

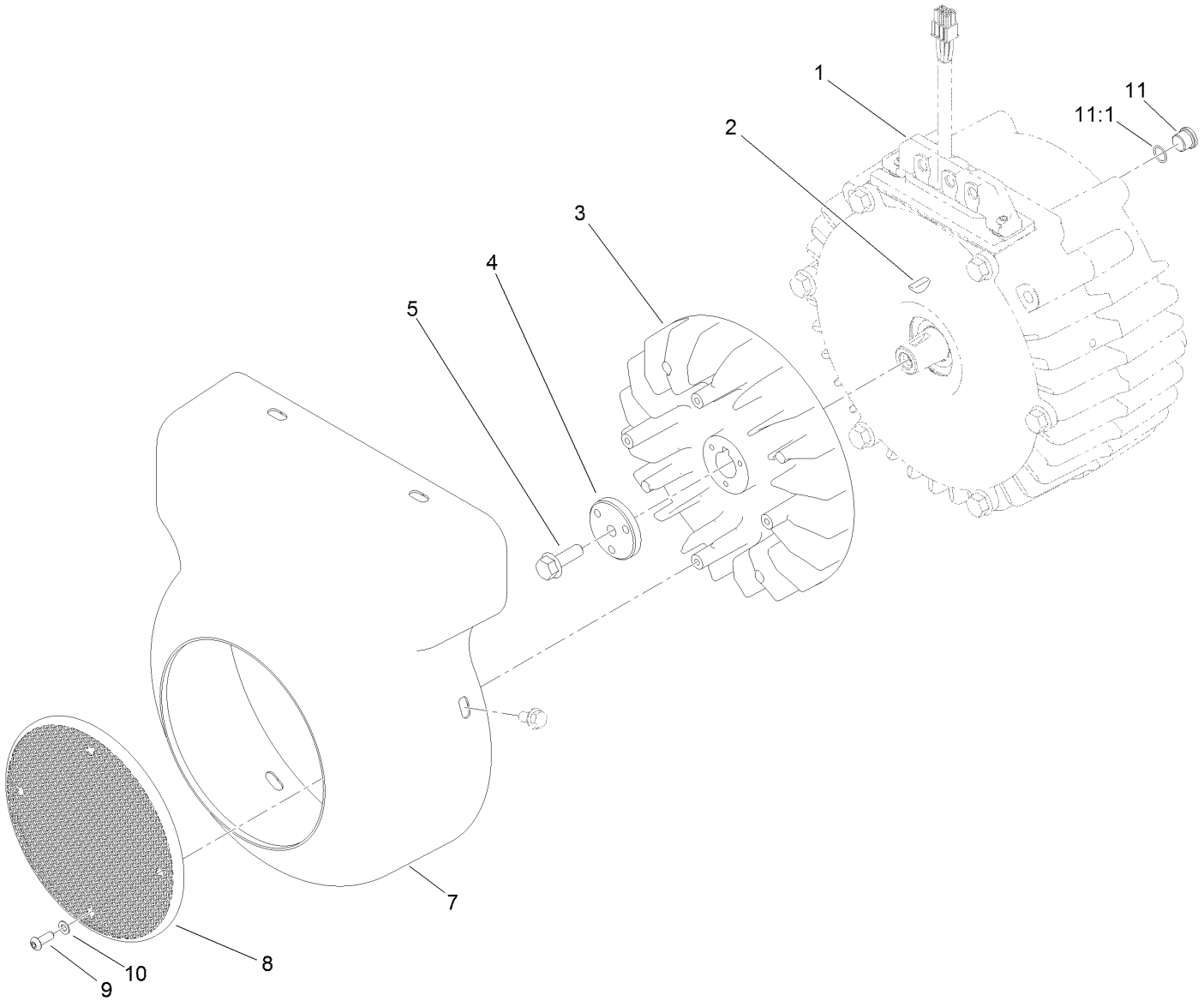


# Generator Assembly No. 117-8182

| *Ref.* | *Part Number* | *Qty.* | *Description* |
|---|---|---|---|
| 1 | 119-1069 | 1 | Generator Service ASM |
| 2 | 112-5193 | 1 | Key-Woodruff |
| 3 | 117-8184 | 1 | Fan-Generator |
| 4 | 112-9604 | 1 | Collar |
| 5 | 33104-025 | 1 | Screw-HHF |
| 7 | 117-4579 | 1 | Cover-Generator |
| 8 | 120-4582 | 1 | Screen-Fan |
| 9 | 120-4564 | 4 | Screw-Bhcs |
| 10 | 120-4563 | 4 | Washer-Flat |
| 11 | 353-989 | 1 | Plug-Hex, Hollow |
| 11:1 | 237-42 | 1 | O-Ring |

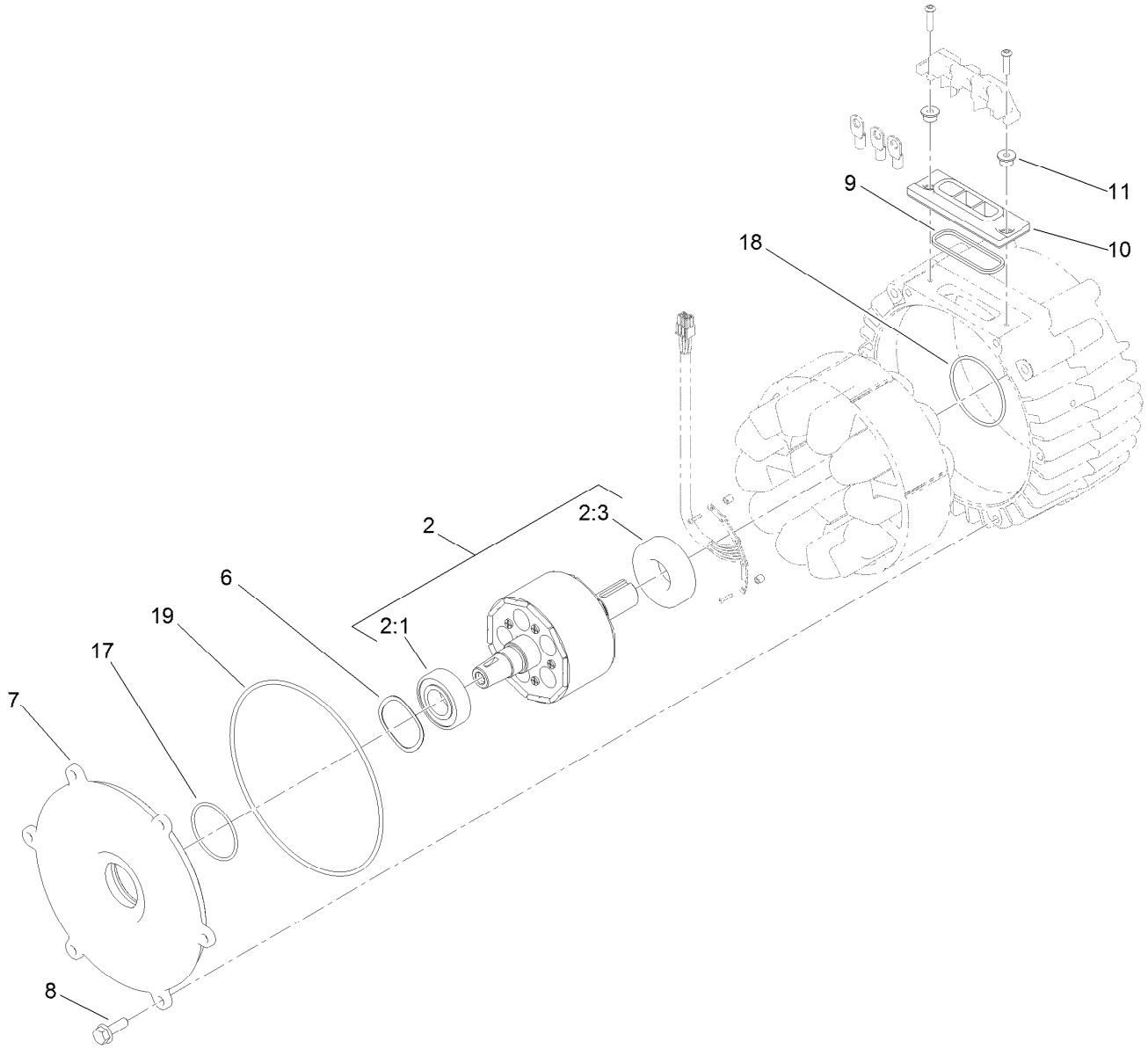


# Generator Service Assembly No. 119-1069

| *Ref.* | *Part Number* | *Qty.* | *Description* |
|---|---|---|---|
| 2 | 119-7565 | 1 | Rotor ASM |
| 2:1 | 120-4621 | 1 | Bearing |
| 2:3 | 120-4622 | 1 | Bearing |
| 6 | 117-8148 | 1 | Washer-Wave |
| 7 | 117-4514 | 1 | Cover-Generator |
| 8 | 33104-025 | 6 | Screw-HHF |
| 9 | 120-4518 | 1 | Gasket-Isolator |
| 10 | 112-5155 | 1 | Isolator-Thermal |
| 11 | 117-4501 | 2 | Spacer-Shoulder |
| 17 | 107-3244 | 1 | O-Ring |
| 18 | 117-8177 | 1 | O-Ring |
| 19 | 112-5199 | 1 | O-Ring |

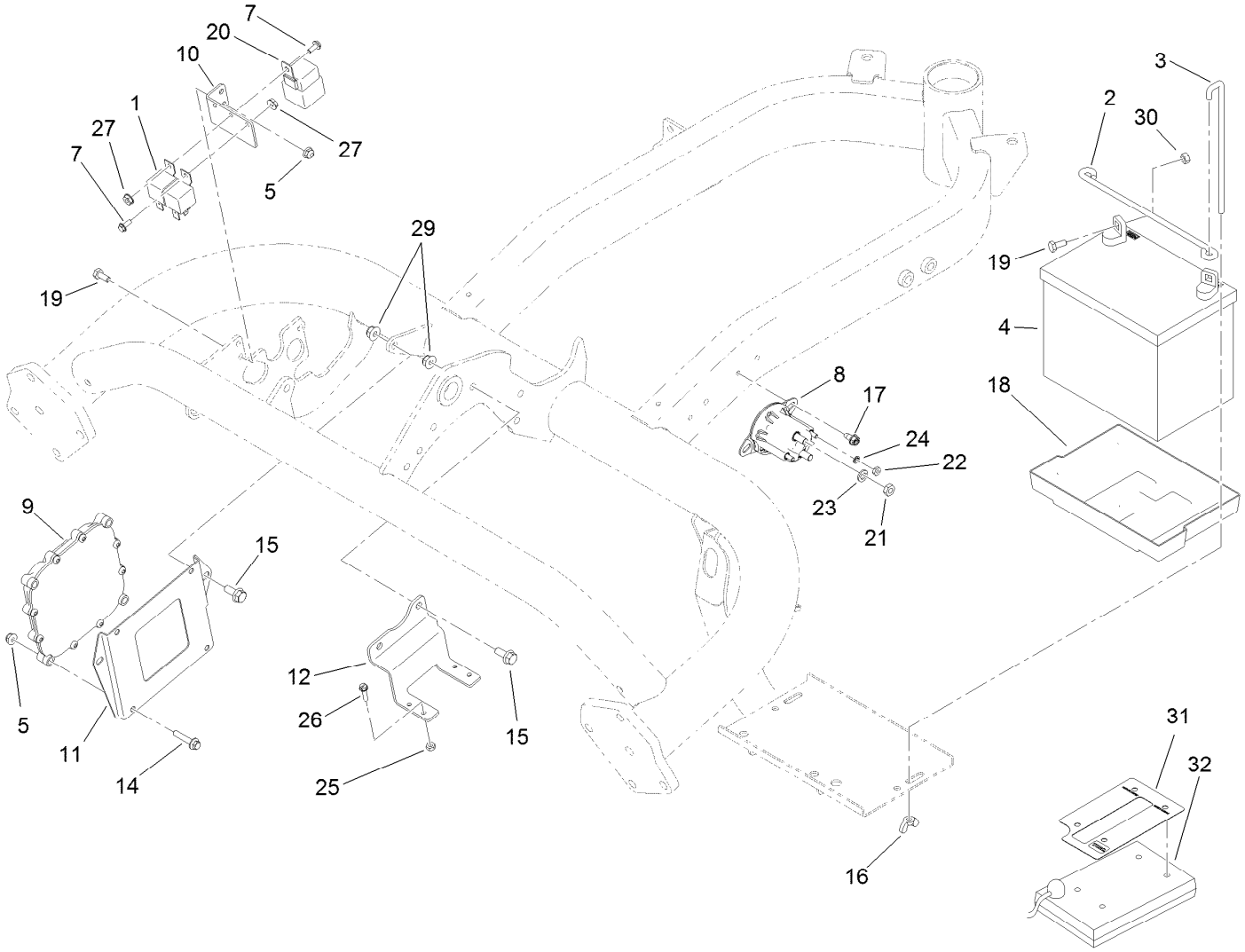


# Battery Assembly

| Ref. | Part Number | Qty. | Description |
|---|---|---|---|
| 1 | 99-7435 | 2 | Relay-Power |
| 2 | 100-6434 | 1 | Rod-Hold Down, Battery |
| 3 | 100-6435 | 2 | Post-Battery |
| 4 | 104-8162 | 1 | Battery-Dry |
| 5 | 104-7201 | 6 | Nut-HF |
| 7 | 112-6349 | 2 | Screw-HWH |
| 8 | 114-3315 | 1 | Solenoid |
| 9 | 115-1900 | 1 | Controller |
| 10 | 119-2097-01 | 1 | Bracket-Relay |
| 11 | 119-2099-01 | 1 | Plate-Mounting, Controller |
| 12 | 119-2119-01 | 1 | Bracket-Block, Fuse |
| 14 | 3234-21 | 4 | Screw-HHF |
| 15 | 3234-47 | 4 | Screw-HHF |
| 16 | 32103-22 | 2 | Nut-Wing |
| 17 | 32104-17 | 2 | Screw-HWH |

| Ref. | Part Number | Qty. | Description |
|---|---|---|---|
| 18 | 106948 | 1 | Tray-Battery |
| 19 | 321-3 | 2 | Screw-HH |
| 20 | 99-7430 | 1 | Relay |
| 21 | 3220-2 | 2 | Nut-Jam |
| 22 | 3219-14 | 2 | Nut-Hex |
| 23 | 3253-4 | 2 | Washer-Lock |
| 24 | 3254-1 | 2 | Washer-Lock, Int |
| 25 | 3296-2 | 4 | Nut-Lock, NI |
| 26 | 32105-13 | 4 | Screw-HWH |
| 27 | 32149-8 | 2 | Nut-Keps |
| 29 | 104-8300 | 4 | Nut-HF, NI |
| 30 | 3217-5 | 2 | Nut-Hex |
| 31 | 115-8227 | 1 | Decal-Controller |
| 32 | 85-4750 | 1 | Box-Display, Diagnostic |

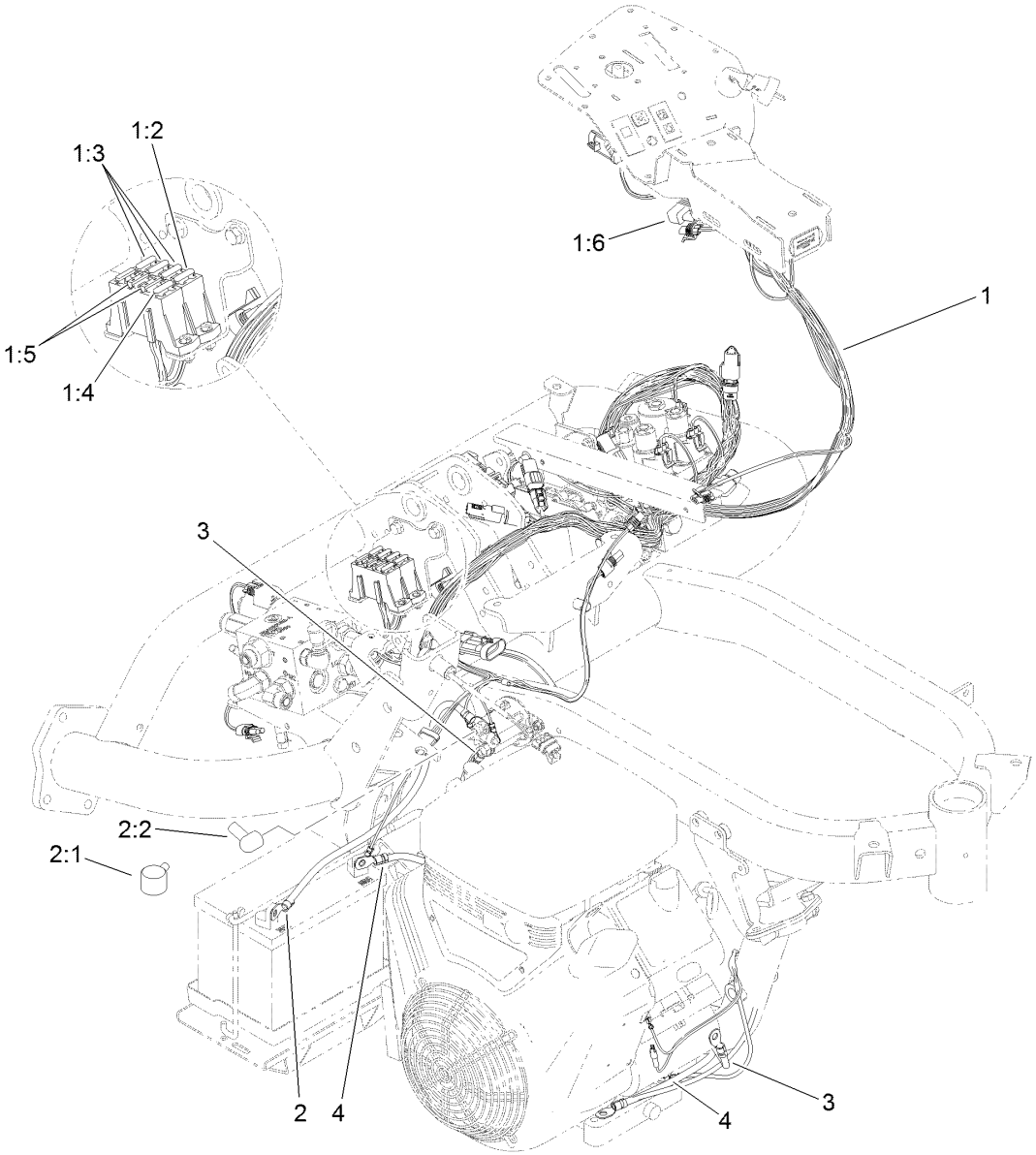


# Wire Harness Assembly

| Ref. | Part Number | Qty. | Description |
|---|---|---|---|
| 1 | 120-3993 | 1 | Harness-Wire |
| 1:2 | 94-6710 | 1 | Fuse-2 Amp |
| 1:3 | 114241 | 3 | Fuse-Blade, 7.5 Amp |
| 1:4 | 218-578 | 1 | Fuse-Blade, 10 Amp |
| 1:5 | 109355 | 2 | Fuse-Blade, 15 Amp |
| 1:6 | 104-4022 | 1 | Resistor-75 Ohm |
| 2 | 109-7653 | 1 | Positive Battery Cable ASM |
| 2:1 | 109-2407 | 1 | Insulator-Battery |
| 2:2 | 1-543393 | 1 | Insulator-Solenoid |
| 3 | 119-1781 | 1 | Cable-Battery, Positive |
| 4 | 114-9748 | 1 | Cable-Battery, Negative |

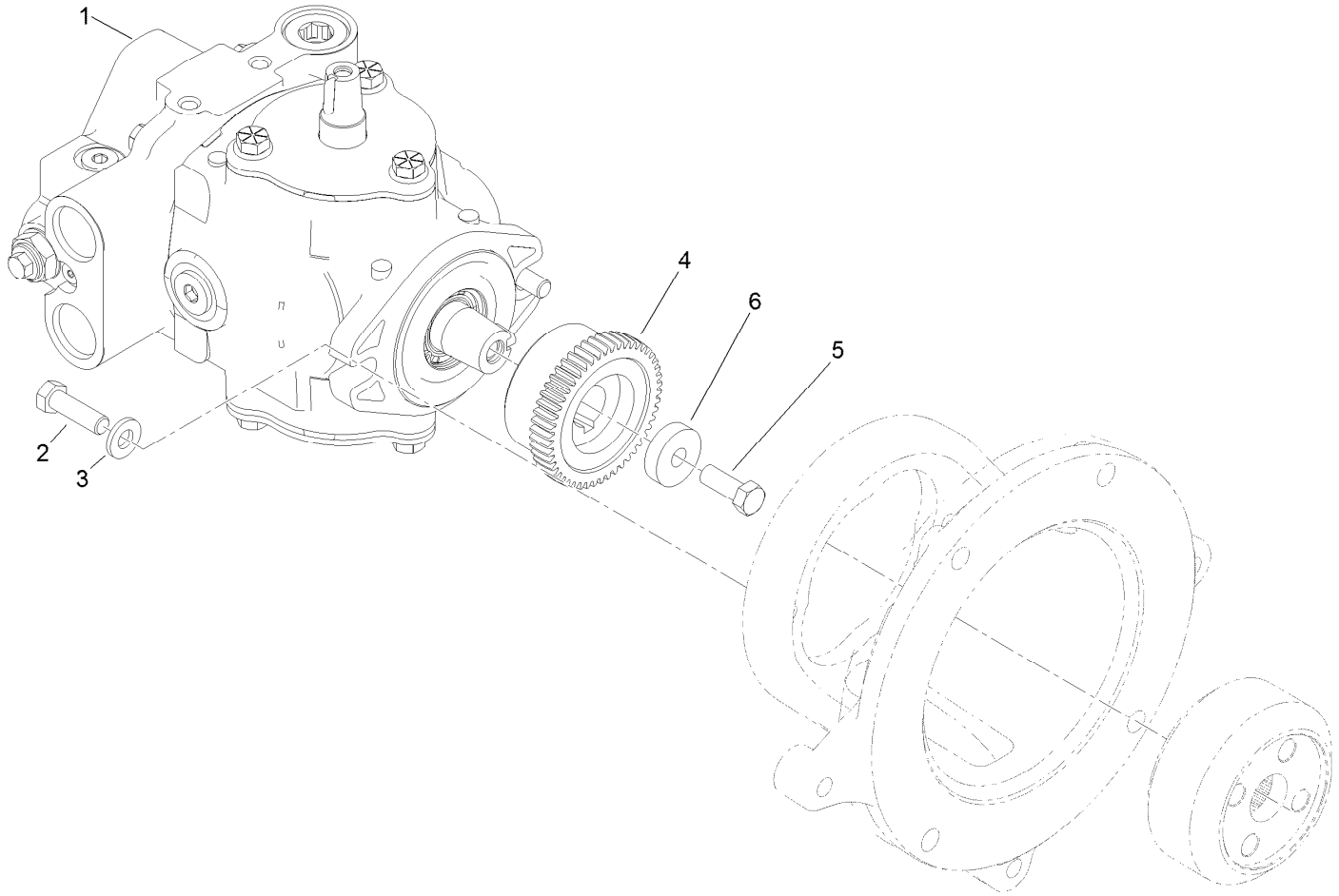


# Pump Coupling Assembly

| Ref. | Part Number | Qty. | Description |
|---|---|---|---|
| 1 | 114-9957 | 1 | HYD Pump ASM |
| 2 | 323-7 | 2 | Screw-HH |
| 3 | 100-4852 | 2 | Washer-Hardened |
| 4 | 119-4418 | 1 | Coupling |
| 5 | 3211-4 | 1 | Screw-HH |
| 6 | 117-3657 | 1 | Spacer |

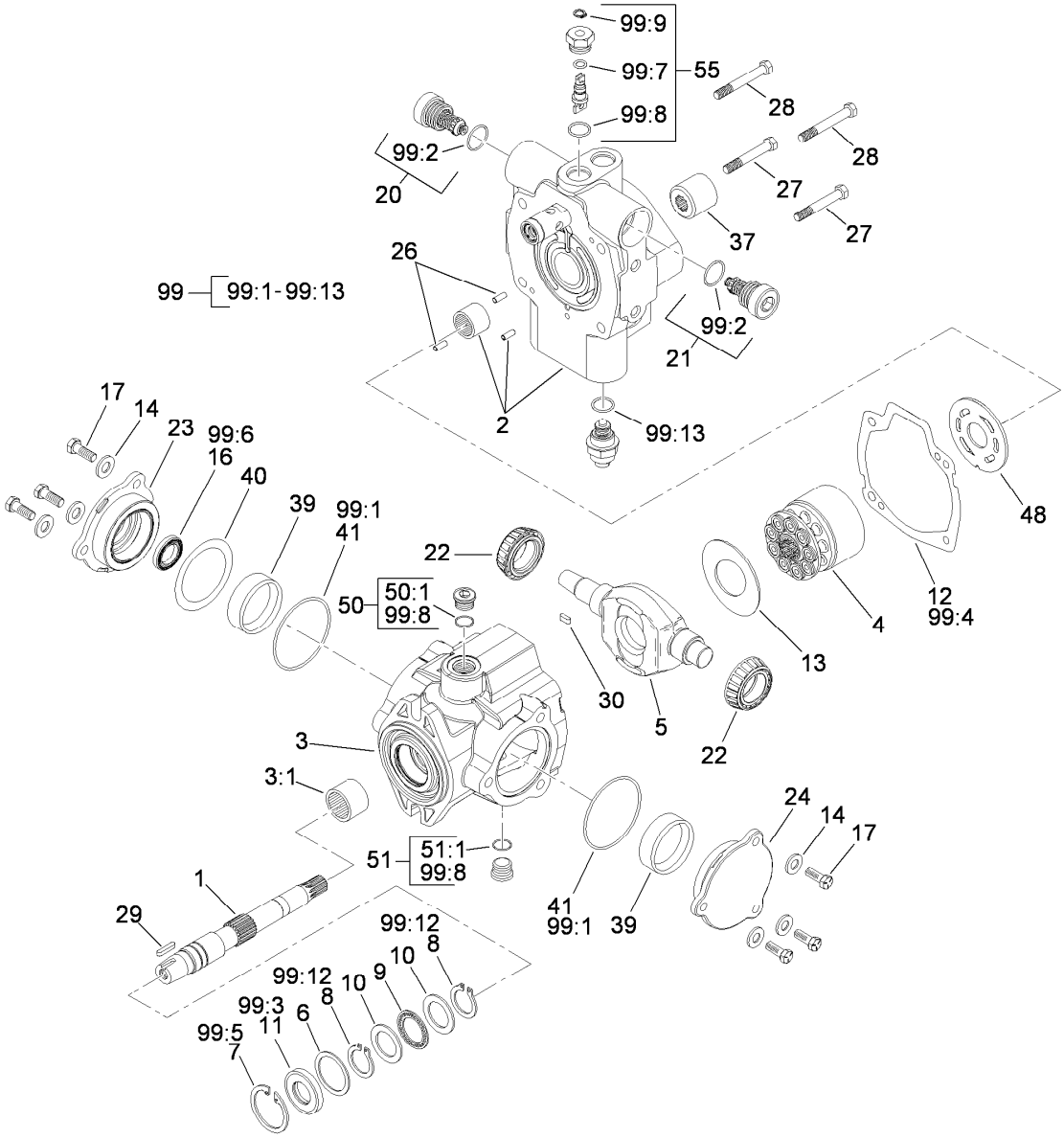


# Hydraulic Pump Assembly No. 114-9957

| Ref. | Part Number | Qty. | Description |
|---|---|---|---|
| 1 | 119-7148 | 1 | Shaft-Drive, Tapered |
| 2 | 119-7149 | 1 | Endcover ASM |
| 3 | 100-3176 | 1 | Housing ASM |
| 3:1 | 94-6363 | 1 | Bearing |
| 4 | 76-6070 | 1 | Rotating Kit |
| 5 | 104-4888 | 1 | Swashplate |
| 6 | 33-3720 | 1 | Washer |
| 7 | 32151-13 | 1 | Ring-Retaining |
| 8 | 32151-29 | 2 | Ring-Retaining |
| 9 | 252-66 | 1 | Bearing-Thrust |
| 10 | 252-71 | 2 | Washer-Thrust |
| 11 | 104-4861 | 1 | Seal-Shaft |
| 12 | 33-4930 | 1 | Gasket-Housing |
| 13 | 98-4635 | 1 | Insert-Plate, Cam |
| 14 | 105-9762 | 6 | Washer |
| 16 | 76-6190 | 1 | Seal-Shaft |
| 17 | 98-4640 | 6 | Screw-Cap |
| 20 | 120-1989 | 1 | Relief Valve ASM |

| Ref. | Part Number | Qty. | Description |
|---|---|---|---|
| 21 | 120-1989 | 1 | Relief Valve ASM |
| 22 | 98-4639 | 2 | Bearing-Cone |
| 23 | 98-4645 | 1 | Plate-Cover |
| 24 | 98-4644 | 1 | Plate-Cover |
| 26 | 76-6150 | 2 | Pin-Dowel |
| 27 | 76-6160 | 2 | Capscrew |
| 28 | 76-6170 | 2 | Capscrew |
| 29 | 120-5751 | 1 | Key |
| 30 | 94-3646 | 1 | Key |
| 37 | 74-9040 | 1 | Coupler |
| 39 | 104-4046 | 2 | Bearing-Cup |
| 40 | 100-3182 | 1 | Shim Kit |
| 41 | 100-3179 | 2 | O-Ring |
| 48 | 100-3180 | 1 | Plate-Valve |
| 50 | 74-9280 | 1 | Plug ASM |
| 50:1 | | 1 | O-Ring ■ |
| 51 | 74-9280 | 1 | Plug ASM |
| 51:1 | | 1 | O-Ring ■ |

● Not illustrated

■ Not serviced separately

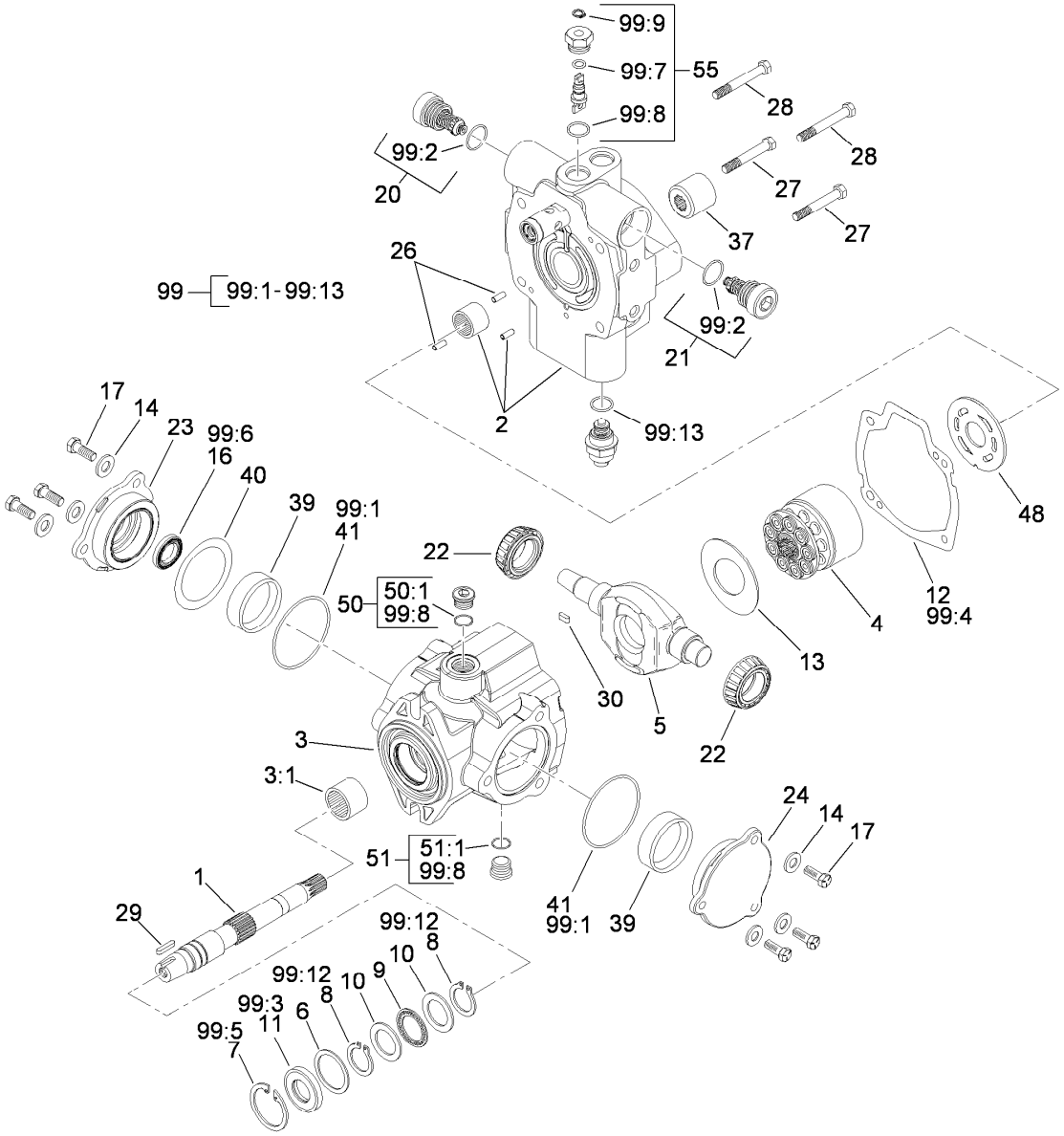


# Hydraulic Pump Assembly No. 114-9957 (continued)

| Ref. | Part Number | Qty. | Description |
|---|---|---|---|
| 55 | 105-3811 | 1 | Valve-Bypass |
| 99 | 120-5754 | 1 | Seal Kit |
| 99:1 | | 2 | O-Ring ■ |
| 99:2 | | 2 | O-Ring ■ |
| 99:3 | | 1 | Seal-Shaft ■ |
| 99:4 | | 1 | Gasket ■ |
| 99:5 | | 1 | Ring-Retaining ■ |
| 99:6 | | 1 | Seal-Shaft ■ |
| 99:7 | | 1 | O-Ring ■ |
| 99:8 | | 5 | O-Ring ■ |
| 99:9 | | 1 | Ring-Retaining ■ |
| 99:10 | | 1 | O-Ring (Not Used For This Configuration) ● ■ |
| 99:11 | | 1 | O Ring-Molded (Not Used For This Configuration) ● ■ |
| 99:12 | | 2 | Ring-Retaining ■ |
| 99:13 | | 1 | O-Ring ■ |

● Not illustrated

■ Not serviced separately

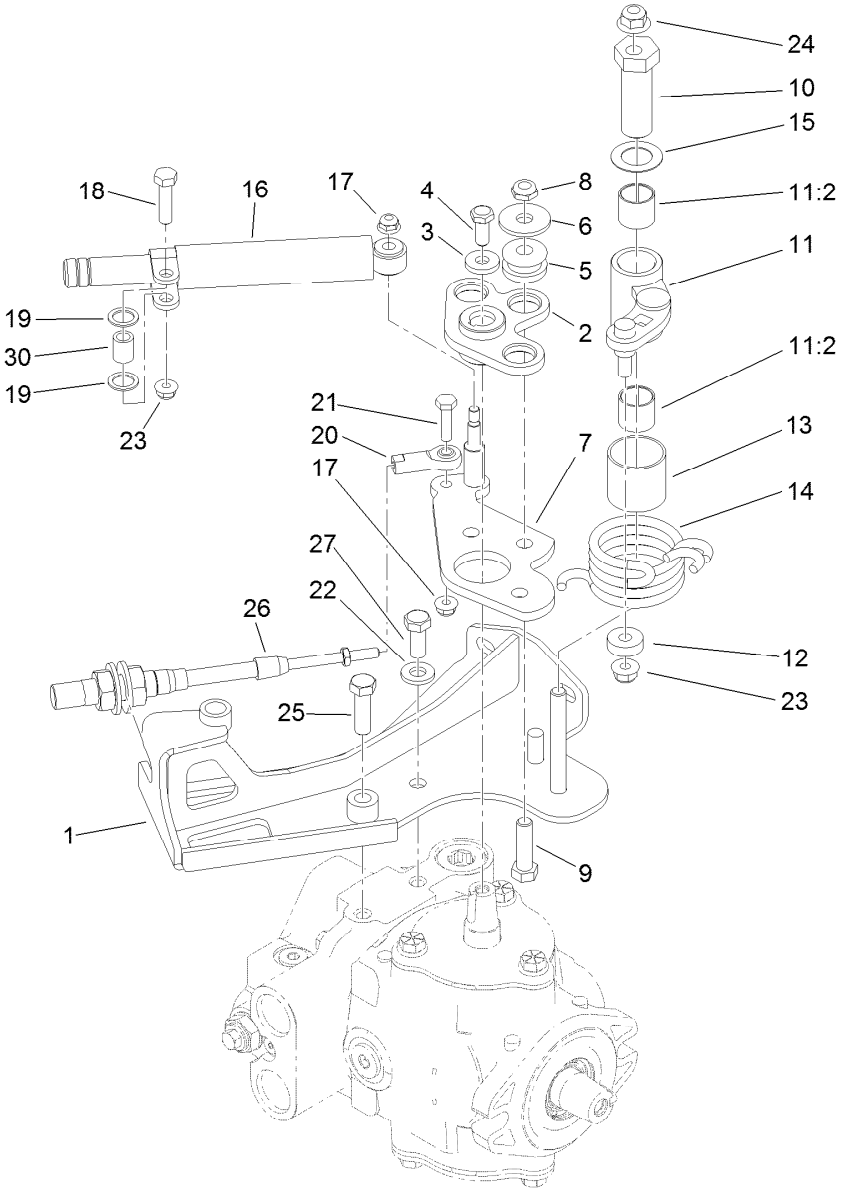


# Neutral Centering Assembly

| Ref. | Part Number | Qty. | Description |
|---|---|---|---|
| 1 | 120-2017 | 1 | Support-Cable |
| 2 | 117-4466 | 1 | Plate ASM |
| 3 | 88-7200 | 1 | Washer-Flat |
| 4 | 3235-6 | 1 | Screw-HH |
| 5 | 63-9750 | 3 | Mount |
| 6 | 93-8806 | 3 | Washer-Hardened |
| 7 | 117-9061 | 1 | Lever-Pump |
| 8 | 3296-59 | 3 | Nut-Lock, NI |
| 9 | 323-29 | 3 | Screw-HH |
| 10 | 117-9046 | 1 | Stud-Eccentric |
| 11 | 117-9053 | 1 | Neutral Arm ASM |
| 11:2 | 94-9609 | 2 | Bushing-Straight |
| 12 | 251-259 | 1 | Bearing-Ball |
| 13 | 115-8158 | 1 | Spacer-Spring |
| 14 | 117-9047 | 1 | Spring-Torsion |

| Ref. | Part Number | Qty. | Description |
|---|---|---|---|
| 15 | 119-8199 | 1 | Washer-Nylon |
| 16 | 76-8870 | 1 | Damper-Lever |
| 17 | 104-7201 | 2 | Nut-HF |
| 18 | 322-6 | 1 | Screw-HH |
| 19 | 94-8196 | 2 | Washer-Nylon |
| 20 | 2411-41 | 1 | Rod End-Ball Joint |
| 21 | 321-6 | 1 | Screw-HH |
| 22 | 100-4852 | 1 | Washer-Hardened |
| 23 | 104-8300 | 2 | Nut-HF, NI |
| 24 | 104-8301 | 1 | Nut-HF, NI |
| 25 | 323-7 | 1 | Screw-HH |
| 26 | 119-1735 | 1 | Cable-Control, Traction |
| 27 | 323-5 | 1 | Screw-HH |
| 30 | 94-8197 | 1 | Tube-Pivot |

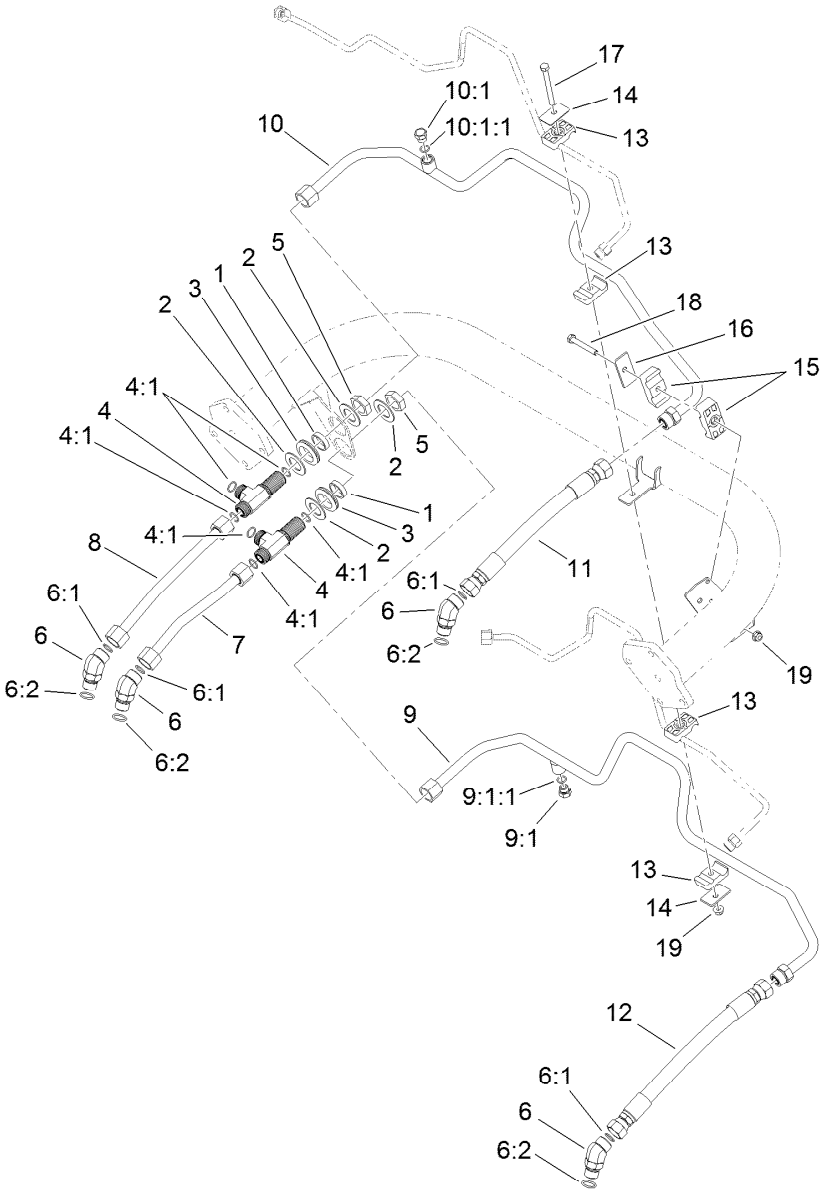


# Traction Drive Hydraulic Line Assembly

| Ref. | Part Number | Qty. | Description |
|---|---|---|---|
| 1 | 69-9000 | 2 | Spacer |
| 2 | 69-9010 | 4 | Washer |
| 3 | 240-3 | 2 | Grommet-Rubber |
| 4 | 94-5350 | 2 | Tee-Bulkhead |
| 4:1 | 237-65 | 3 | O-Ring |
| 5 | 340-74 | 2 | Nut-Lock, Bulkhead |
| 6 | 340-14 | 4 | Fitting-HYD-45 |
| 6:1 | 237-65 | 1 | O-Ring |
| 6:2 | 237-80 | 1 | O-Ring |
| 7 | 119-2057 | 1 | HYD Tube ASM |
| 8 | 119-2058 | 1 | HYD Tube ASM |
| 9 | 119-2063 | 1 | HYD Tube ASM |
| 9:1 | 353-508 | 1 | Plug-HH |

| Ref. | Part Number | Qty. | Description |
|---|---|---|---|
| 9:1:1 | 237-42 | 1 | O-Ring |
| 10 | 119-2064 | 1 | HYD Tube ASM |
| 10:1 | 353-508 | 1 | Plug-HH |
| 10:1:1 | 237-42 | 1 | O-Ring |
| 11 | 115-9484 | 1 | HYD Hose ASM |
| 12 | 115-9485 | 1 | HYD Hose ASM |
| 13 | 56-7970 | 4 | Clamp-Tube |
| 14 | 69-9760 | 2 | Coverplate |
| 15 | 119-8173 | 2 | Clamp-Tube |
| 16 | 69-9761 | 1 | Plate-Cover |
| 17 | 322-20 | 1 | Screw-HH |
| 18 | 322-12 | 1 | Screw-HH |
| 19 | 104-8300 | 2 | Nut-HF, NI |

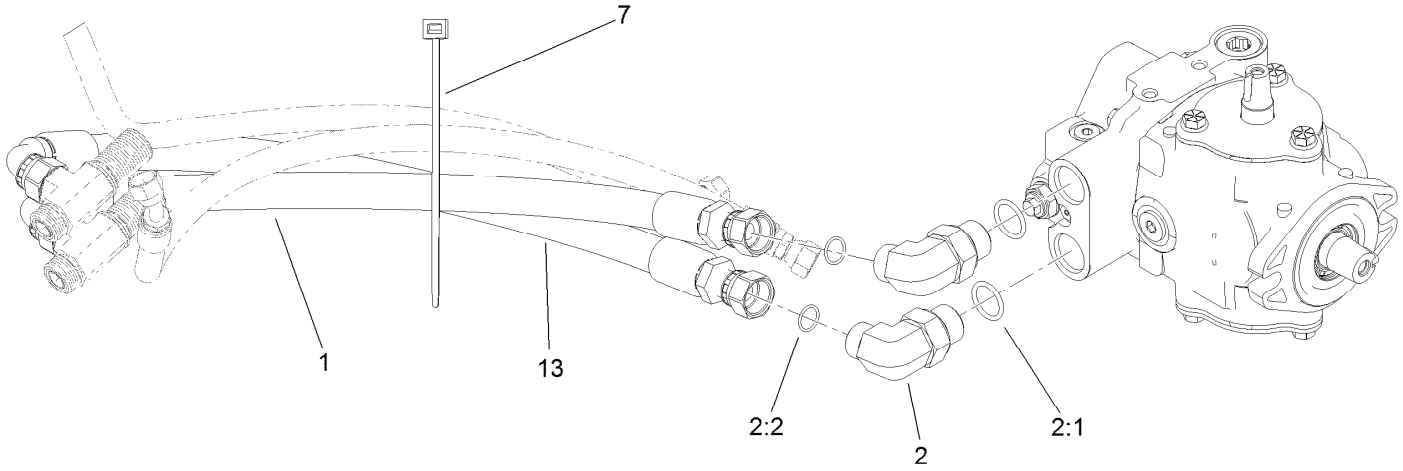


# Traction Drive Hose Routing Assembly

| *Ref.* | *Part Number* | *Qty.* | *Description* |
|---|---|---|---|
| 1 | 119-2060 | 1 | HYD Hose ASM |
| 2 | 340-139 | 2 | Fitting-Elbow 90 |
| 2:1 | 237-81 | 1 | O-Ring |
| 2:2 | 237-65 | 1 | O-Ring |
| 7 | 3290-378 | 1 | Tie-Cable |
| 13 | 120-1988 | 1 | HYD Hose ASM |

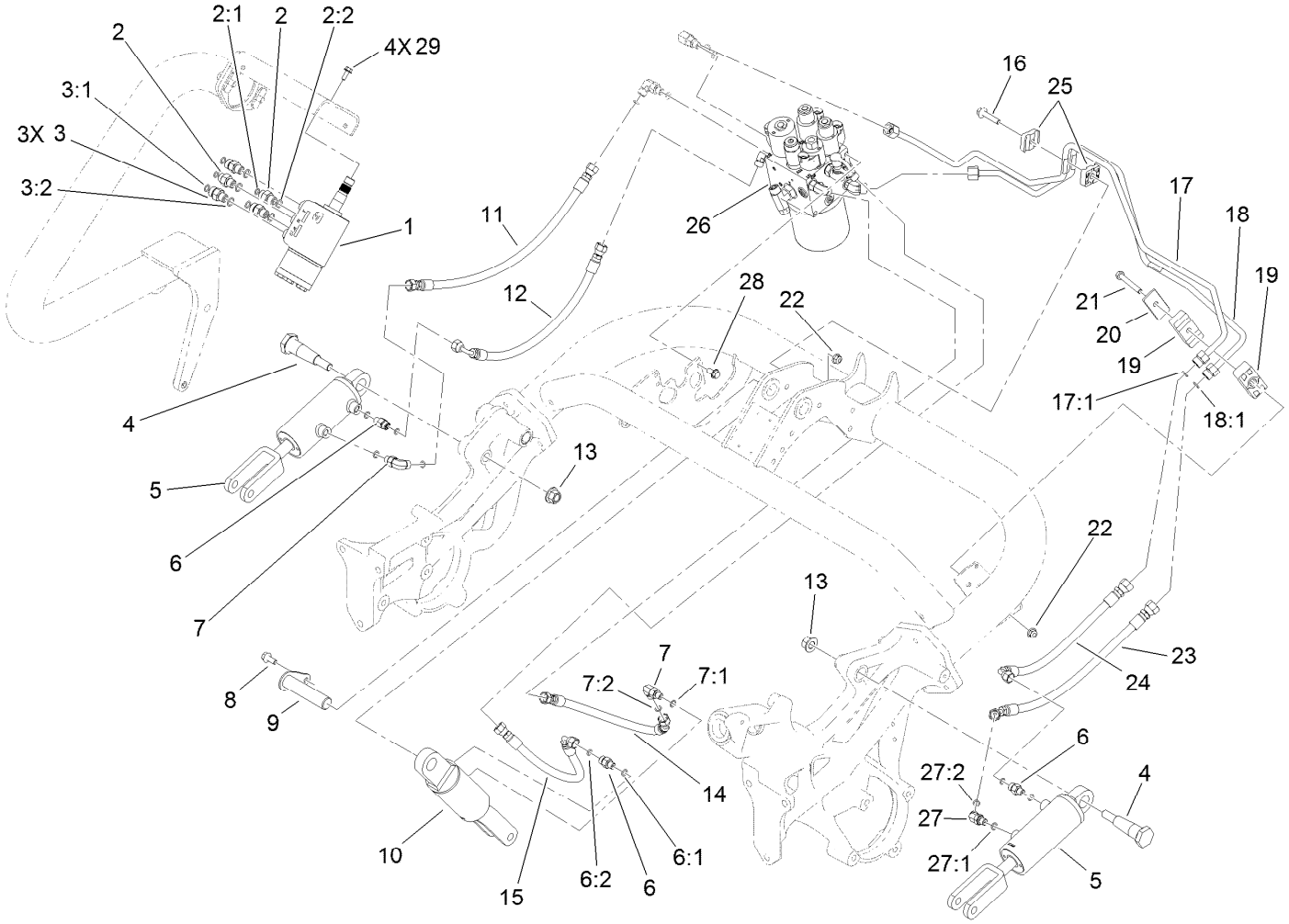


# Lift Circuit Assembly

| Ref. | Part Number | Qty. | Description |
|---|---|---|---|
| 1 | 114-4672 | 1 | Steering Valve ASM |
| 2 | 340-1 | 2 | Fitting-Straight |
| 2:1 | 237-21 | 1 | O-Ring |
| 2:2 | 237-42 | 1 | O-Ring |
| 3 | 340-2 | 3 | Fitting-Straight |
| 3:1 | 237-22 | 1 | O-Ring |
| 3:2 | 237-42 | 1 | O-Ring |
| 4 | 112-5709 | 2 | Pin-Tapered |
| 5 | 119-8129 | 2 | No. 2 And 3 HYD Cylinder ASM |
| 6 | 340-92 | 3 | Fitting-Straight |
| 6:1 | 237-78 | 1 | O-Ring |
| 6:2 | 237-21 | 1 | O-Ring |
| 7 | 340-132 | 2 | Fitting-90 DEG |
| 7:1 | 237-78 | 1 | O-Ring |
| 7:2 | 237-21 | 1 | O-Ring |
| 8 | 3234-47 | 1 | Screw-HHF |
| 9 | 119-8104 | 1 | Pin ASM |

| Ref. | Part Number | Qty. | Description |
|---|---|---|---|
| 10 | 119-8128 | 1 | No. 1 HYD Cylinder ASM |
| 11 | 119-2052 | 1 | HYD Hose ASM |
| 12 | 119-2053 | 1 | HYD Hose ASM |
| 13 | 99-5107 | 2 | Nut-Lock |
| 14 | 119-2051 | 1 | HYD Hose ASM |
| 15 | 119-2050 | 1 | HYD Hose ASM |
| 16 | 115-1794 | 1 | Screw-HHF |
| 17 | 119-8126 | 1 | HYD Tube ASM |
| 17:1 | 237-22 | 1 | O-Ring |
| 18 | 119-8127 | 1 | HYD Tube ASM |
| 18:1 | 237-22 | 1 | O-Ring |
| 19 | 120-3200 | 2 | Clamp-Tube |
| 20 | 69-9761 | 1 | Plate-Cover |
| 21 | 322-12 | 1 | Screw-HH |
| 22 | 104-8300 | 3 | Nut-HF, NI |
| 23 | 119-2066 | 1 | HYD Hose ASM |
| 24 | 119-2065 | 1 | Hose-HYD |
| 25 | 56-7973 | 2 | Clamp-Tube |

● Not serviced separately

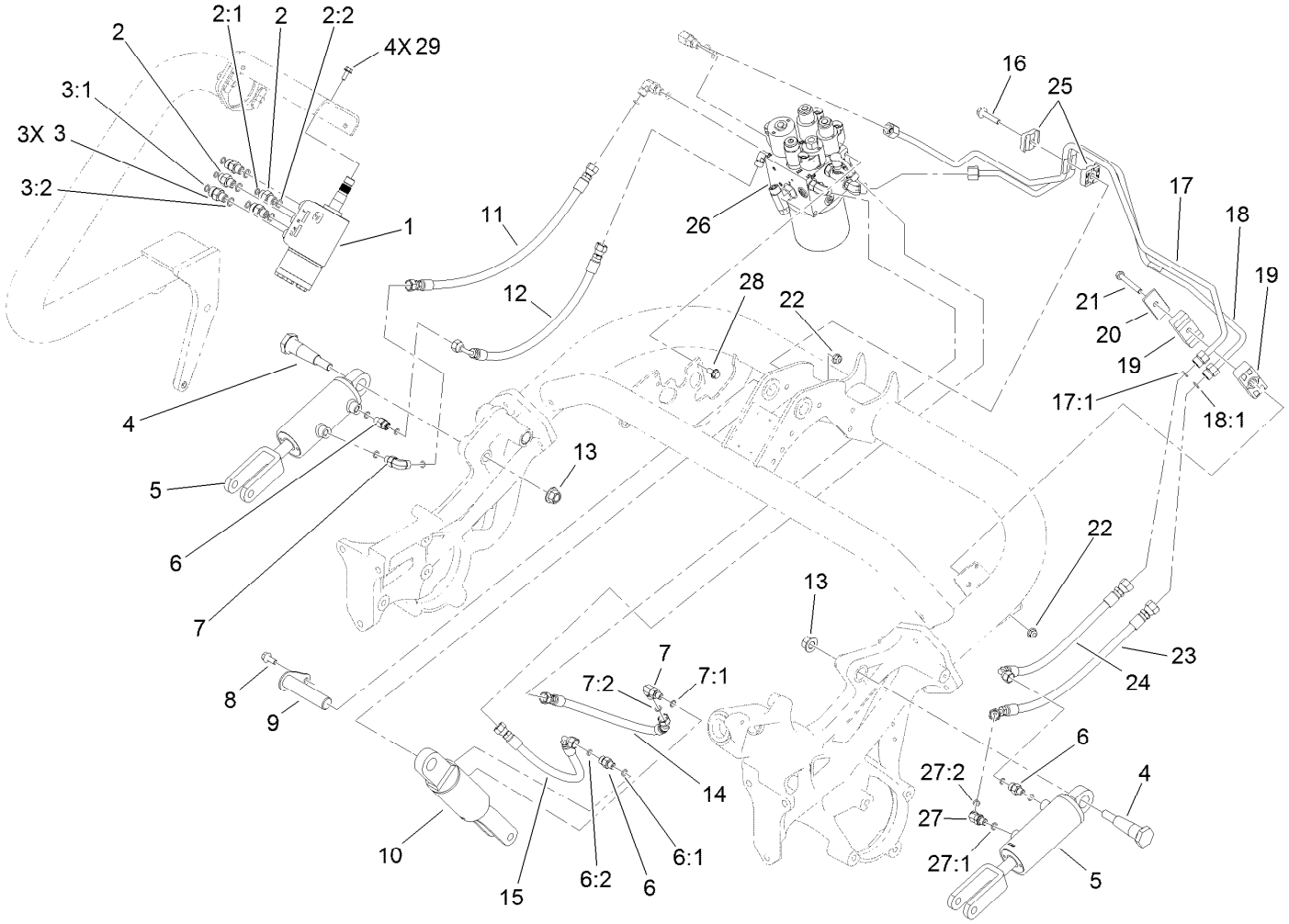


# Lift Circuit Assembly (continued)

| Ref. | Part Number | Qty. | Description |
|---|---|---|---|
| 26 | | 1 | Hydraulic Lift Manifold ASM ● |
| 27 | 340-103 | 1 | Fitting-HYD, 45 DEG |
| 27:1 | 237-78 | 1 | O-Ring |
| 27:2 | 237-21 | 1 | O-Ring |
| 28 | 3234-7 | 2 | Screw-HHF |
| 29 | 33103-016 | 4 | Screw-HHF |

● Not serviced separately

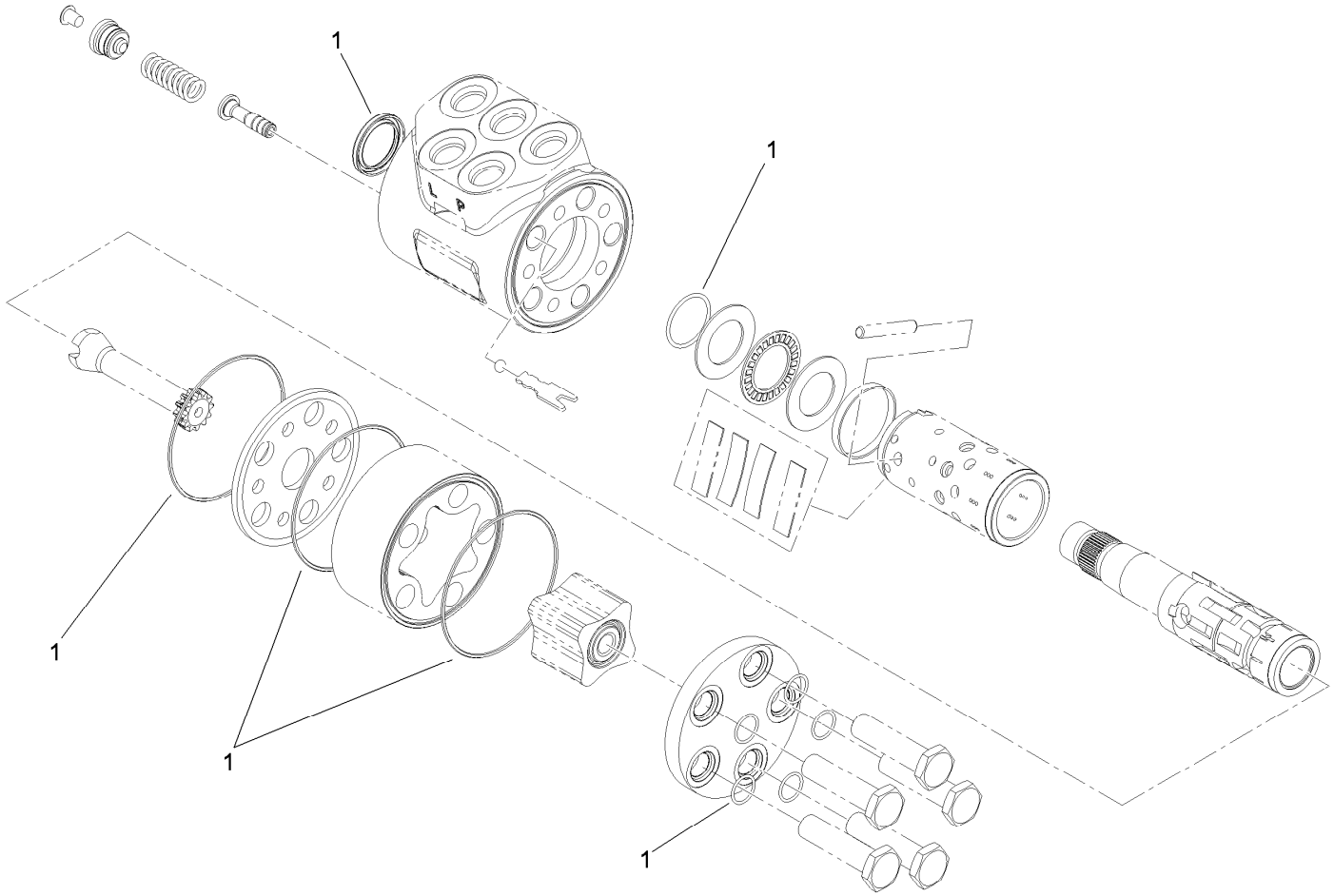


# Steering Valve Assembly No. 114-4672

| *Ref.* | *Part Number* | *Qty.* | *Description* |
|---|---|---|---|
| 1 | 106-6716 | 1 | Seal Kit |

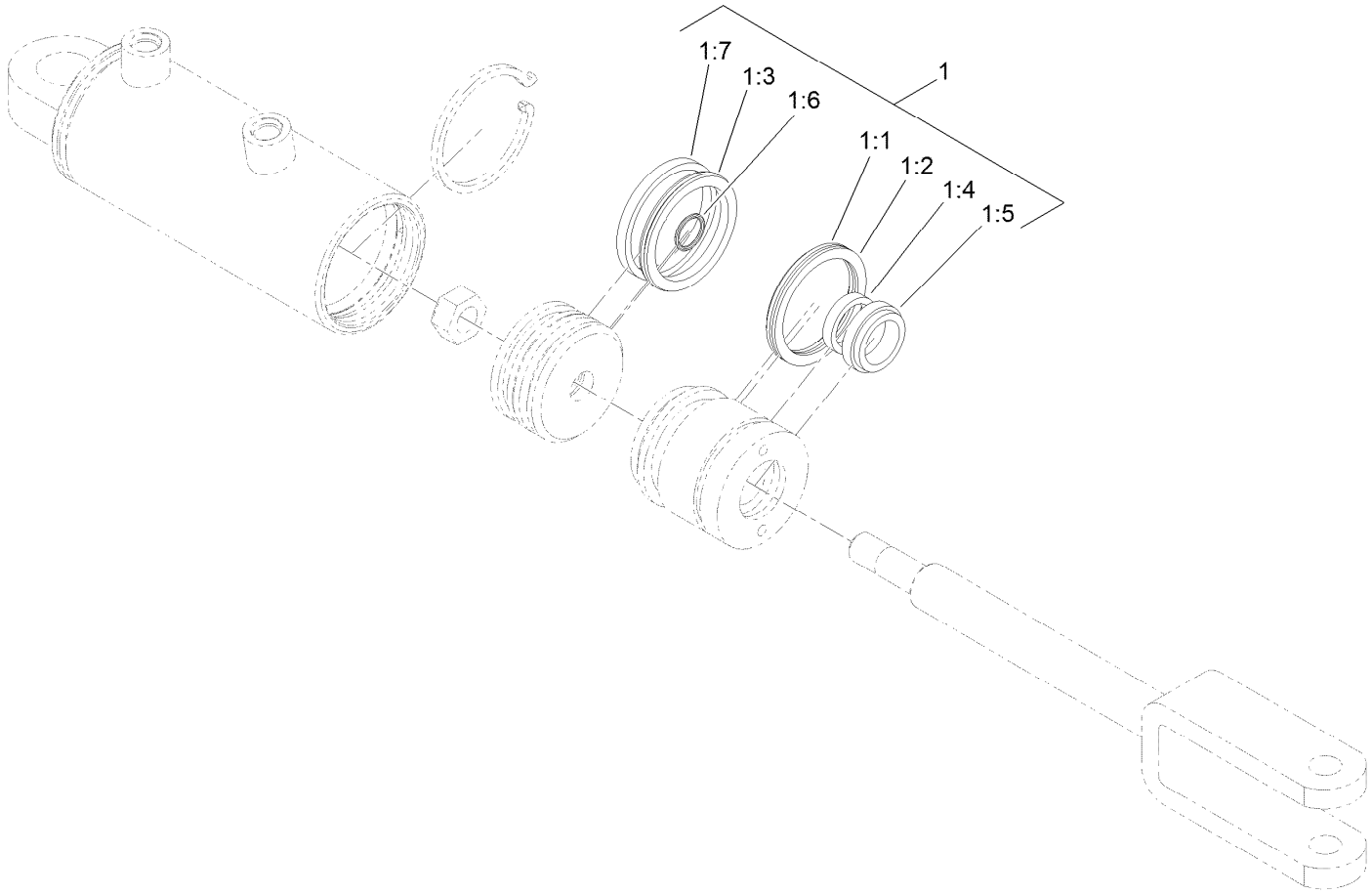


# Hydraulic Cylinder Assembly No. 119-8129

| *Ref.* | *Part Number* | *Qty.* | *Description* |
|---|---|---|---|
| 1 | 115-3410 | 1 | Seal Kit |
| 1:1 | | 1 | O-Ring ● |
| 1:2 | | 1 | Backup ● |
| 1:3 | | 1 | Bp Seal ● |
| 1:4 | | 1 | Bs Seal ● |
| 1:5 | | 1 | Seal-Dust ● |
| 1:6 | | 1 | O-Ring ● |
| 1:7 | | 1 | Ring-Wear ● |

● Not serviced separately

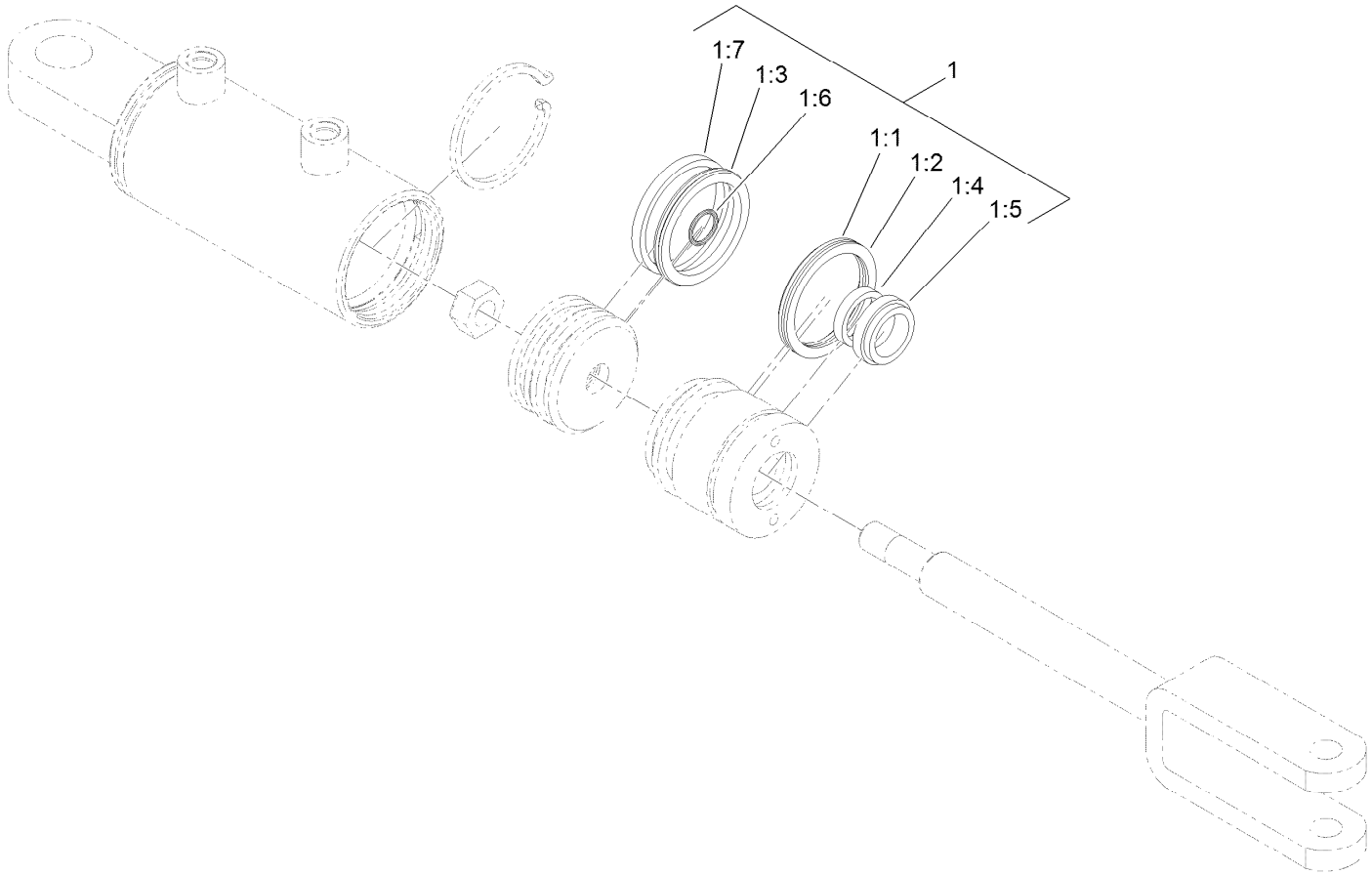


# Hydraulic Cylinder Assembly No. 119-8128

| *Ref.* | *Part Number* | *Qty.* | *Description* |
|---|---|---|---|
| 1 | 115-3410 | 1 | Seal Kit |
| 1:1 | | 1 | O-Ring ● |
| 1:2 | | 1 | Backup ● |
| 1:3 | | 1 | Bp Seal ● |
| 1:4 | | 1 | Bs Seal ● |
| 1:5 | | 1 | Seal-Dust ● |
| 1:6 | | 1 | O-Ring ● |
| 1:7 | | 1 | Ring-Wear ● |

● Not serviced separately

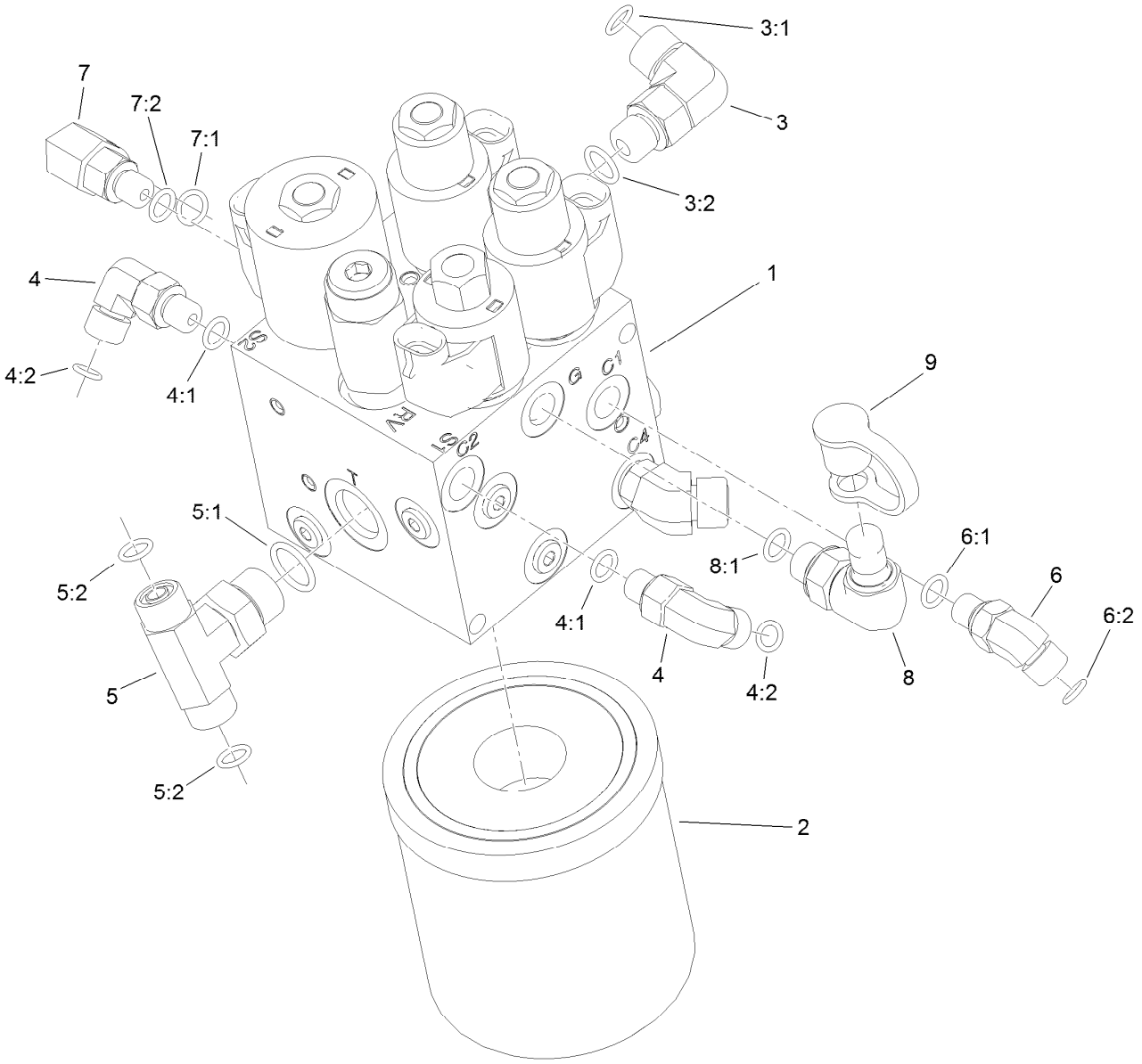


# Hydraulic Lift Manifold Assembly

| Ref. | Part Number | Qty. | Description |
|---|---|---|---|
| 1 | 117-9856 | 1 | Manifold-Lift, HYD |
| 2 | 108-5194 | 1 | Filter-Oil, HYD |
| 3 | 340-77 | 1 | Fitting-Elbow-90 |
| 3:1 | 237-22 | 1 | O-Ring |
| 3:2 | 237-42 | 1 | O-Ring |
| 4 | 340-132 | 2 | Fitting-90 DEG |
| 4:1 | 237-78 | 1 | O-Ring |
| 4:2 | 237-21 | 1 | O-Ring |
| 5 | 92-4799 | 1 | Fitting-Tee, HYD |
| 5:1 | 237-79 | 1 | O-Ring |

| Ref. | Part Number | Qty. | Description |
|---|---|---|---|
| 5:2 | 237-22 | 2 | O-Ring |
| 6 | 340-103 | 1 | Fitting-HYD, 45 DEG |
| 6:1 | 237-78 | 1 | O-Ring |
| 6:2 | 237-21 | 1 | O-Ring |
| 7 | 340-97 | 1 | Fitting-Elbow 90 |
| 7:1 | 237-22 | 1 | O-Ring |
| 7:2 | 237-78 | 1 | O-Ring |
| 8 | 115-9147 | 1 | Fitting-Elbow, 90 DEG |
| 8:1 | 237-78 | 1 | O-Ring |
| 9 | 354-79 | 1 | Cap-Dust |

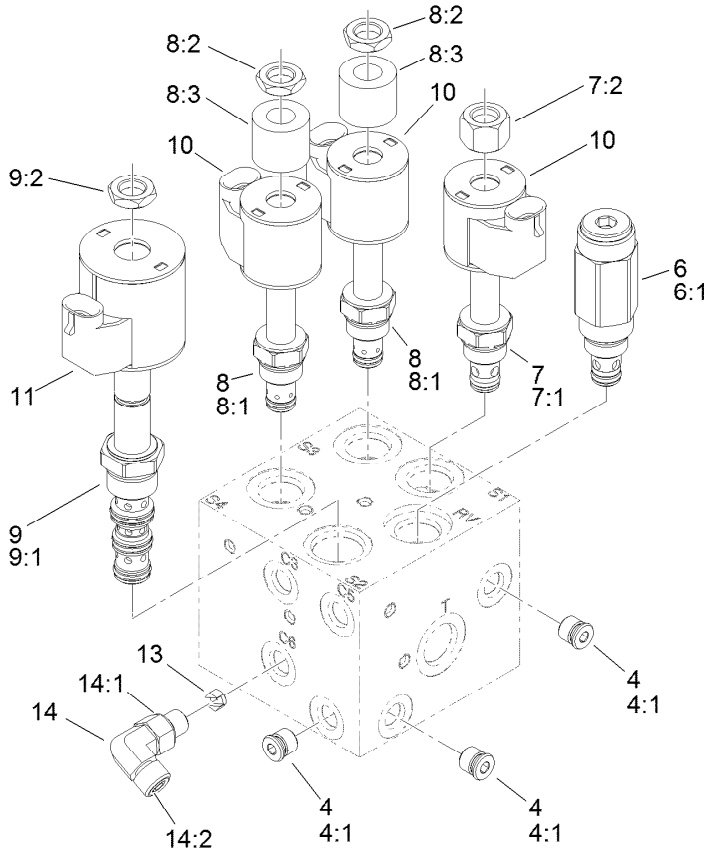


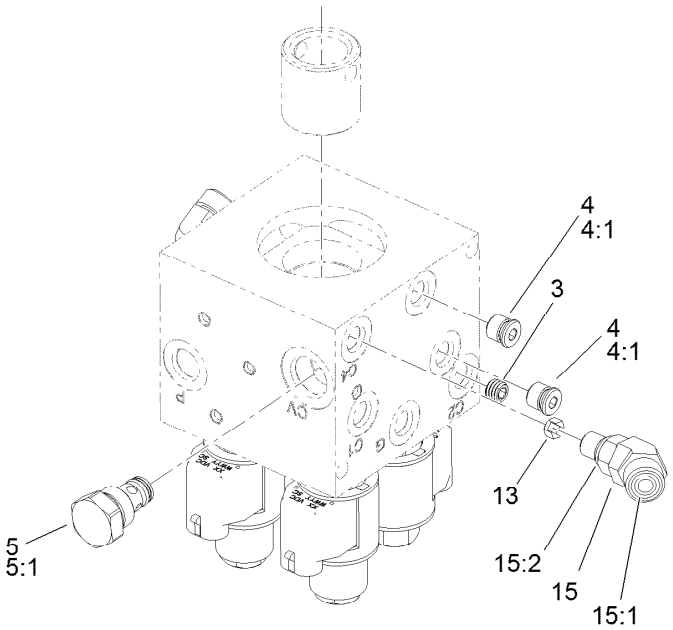


# Hydraulic Lift Manifold Assembly No. 117-9856

| Ref. | Part Number | Qty. | Description |
|---|---|---|---|
| 3 | 119-7144 | 1 | Orifice (.037 Inch) |
| 4 | 353-990 | 5 | Plug ASM |
| 4:1 | 237-78 | 1 | O-Ring |
| 5 | 107-7524 | 1 | Check Valve ASM |
| 5:1 | 105-9156 | 1 | Seal Kit |
| 6 | 112-9207 | 1 | Valve-Relief |
| 6:1 | 105-9156 | 1 | Seal Kit |
| 7 | 107-7517 | 1 | Valve-Solenoid |
| 7:1 | 105-9156 | 1 | Seal Kit |
| 7:2 | 107-7812 | 1 | Nut-Solenoid |
| 8 | 110-8898 | 2 | Valve-Solenoid |
| 8:1 | 107-7527 | 1 | Seal Kit |
| 8:2 | 110-2634 | 1 | Nut-Coil |

| Ref. | Part Number | Qty. | Description |
|---|---|---|---|
| 8:3 | 110-8909 | 1 | Spacer-Coil |
| 9 | 110-8906 | 1 | Valve-Solenoid |
| 9:1 | 110-8908 | 1 | Spool Valve Seal Kit |
| 9:2 | 110-2634 | 1 | Nut-Coil |
| 10 | 110-0497 | 3 | Coil-Solenoid |
| 11 | 110-6344 | 1 | Coil-12V, Dc |
| 13 | 110-8904 | 2 | Orifice-Control, Flow (0.028) |
| 14 | 340-132 | 1 | Fitting-90 DEG |
| 14:1 | 237-78 | 1 | O-Ring |
| 14:2 | 237-21 | 1 | O-Ring |
| 15 | 340-54 | 1 | Elbow-45 DEG |
| 15:1 | 237-22 | 1 | O-Ring |
| 15:2 | 237-78 | 1 | O-Ring |

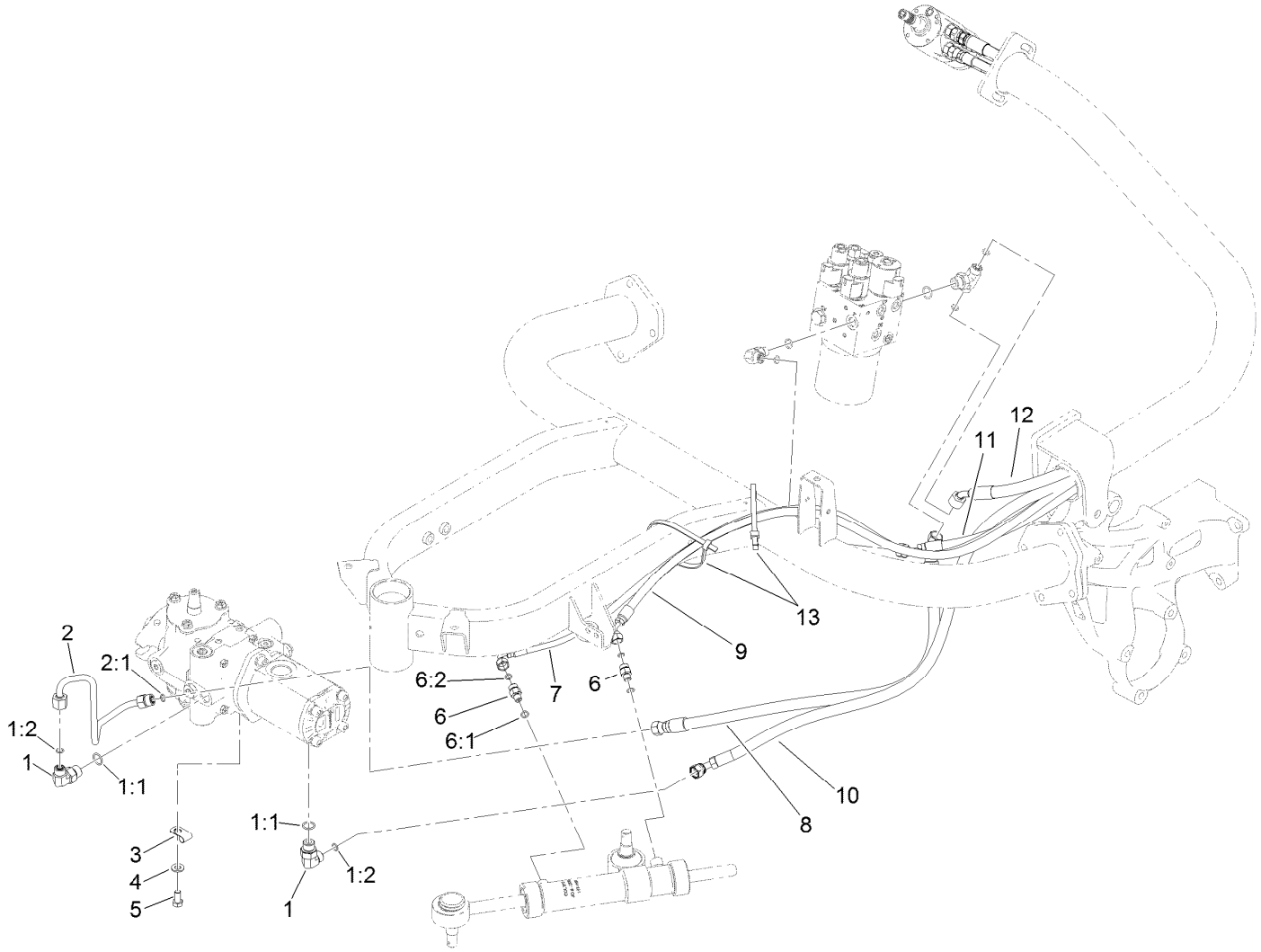


# Steering Circuit Assembly

| Ref. | Part Number | Qty. | Description |
|---|---|---|---|
| 1 | 340-18 | 2 | Fitting-HYD, 90 DEG |
| 1:1 | 237-79 | 1 | O-Ring |
| 1:2 | 237-22 | 1 | O-Ring |
| 2 | 121-6660 | 1 | Tube-HYD |
| 2:1 | 237-22 | 1 | O-Ring |
| 3 | 2412-113 | 1 | Clamp-R |
| 4 | 3256-24 | 1 | Washer-Flat |
| 5 | 323-4 | 1 | Screw-HH |
| 6 | 340-92 | 2 | Fitting-Straight |
| 6:1 | 237-78 | 1 | O-Ring |

| Ref. | Part Number | Qty. | Description |
|---|---|---|---|
| 6:2 | 237-21 | 1 | O-Ring |
| 7 | 119-8124 | 1 | HYD Hose ASM |
| 8 | 119-2062 | 1 | HYD Hose ASM |
| 9 | 119-8123 | 1 | HYD Hose ASM |
| 10 | 119-2070 | 1 | HYD Hose ASM |
| 11 | 117-3683 | 1 | HYD Hose ASM |
| 12 | 117-3684 | 1 | HYD Hose ASM (Steering Tank) |
| 13 | 3334-945 | 2 | Tie-Cable |

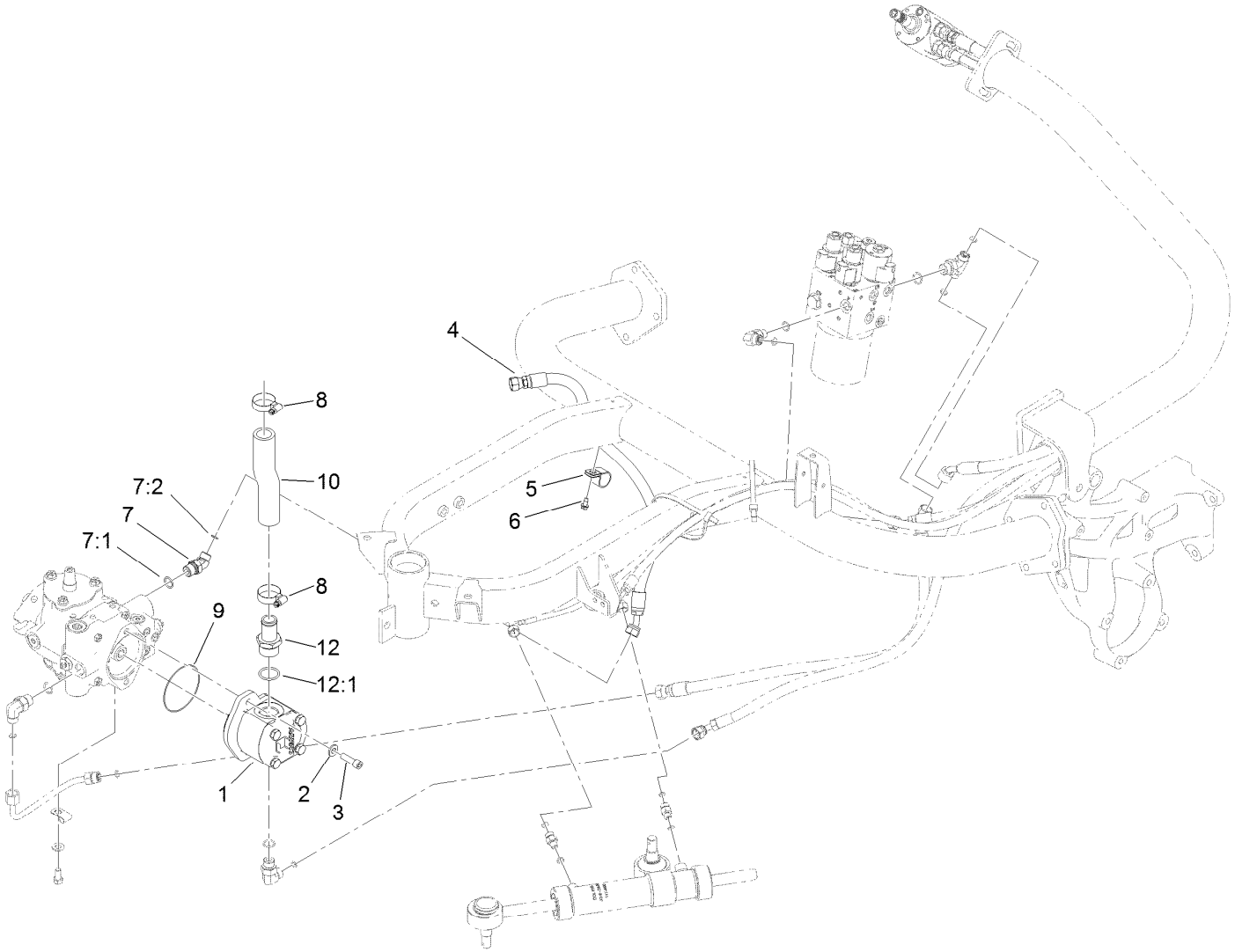


# Steering Circuit Assembly (2)

| *Ref.* | *Part Number* | *Qty.* | *Description* |
|---|---|---|---|
| 1 | 114-9958 | 1 | HYD Gear Pump ASM |
| 2 | 100-4852 | 2 | Washer-Hardened |
| 3 | 3274-1 | 2 | Screw-HSH |
| 4 | 119-8125 | 1 | HYD Hose ASM |
| 5 | 2412-39 | 2 | Clamp-R |
| 6 | 32104-17 | 1 | Screw-HWH |
| 7 | 340-138 | 1 | Fitting-HYD, 45 DEG |
| 7:1 | 237-79 | 1 | O-Ring |
| 7:2 | 237-22 | 1 | O-Ring |
| 8 | 1-633989 | 2 | Clamp-Hose |
| 9 | 353-949 | 1 | O-Ring |
| 10 | 119-2069 | 1 | Hose-Suction |
| 12 | 354-78 | 1 | Connector-Hose |
| 12:1 | 237-146 | 1 | O-Ring |

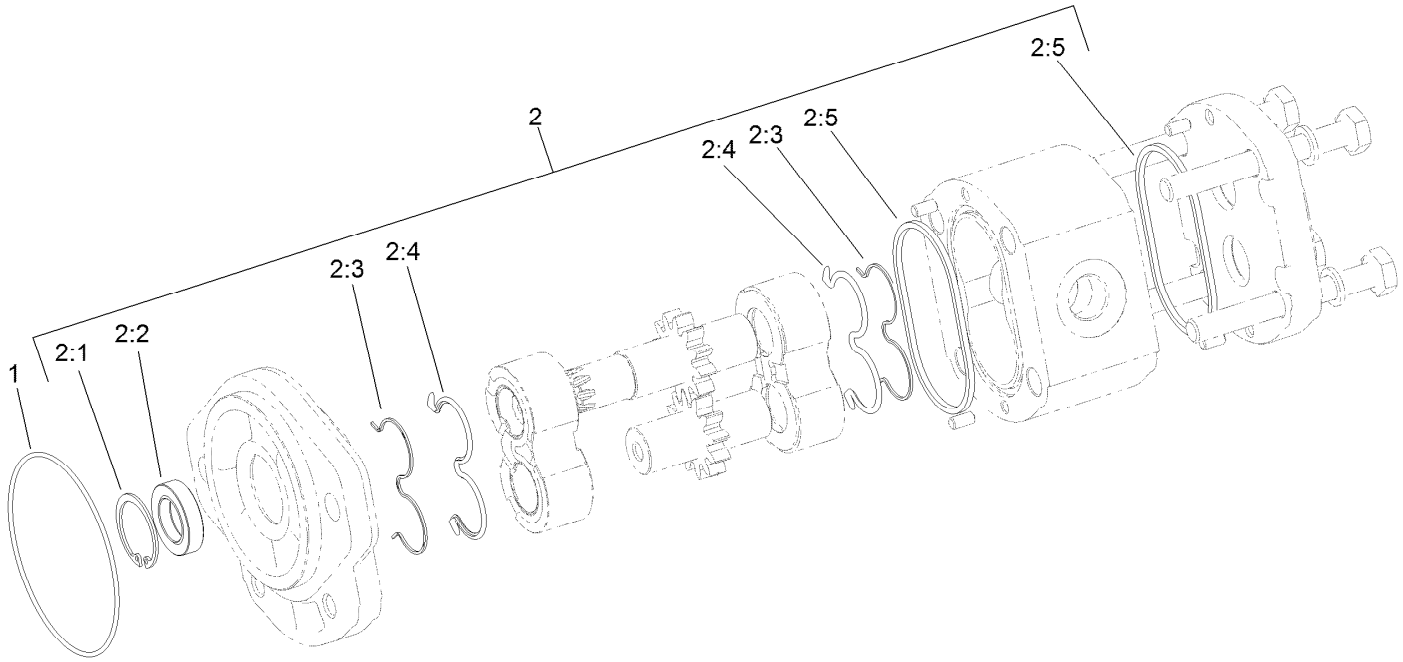


# Hydraulic Gear Pump Assembly No. 114-9958

| *Ref.* | *Part Number* | *Qty.* | *Description* |
|---|---|---|---|
| 1 | 60-3520 | 1 | O-Ring |
| 2 | 119-7135 | 1 | Kit-Seal |
| 2:1 | | 1 | Ring-Retaining ● |
| 2:2 | | 1 | Shaft Seal ● |
| 2:3 | | 2 | Anti-Extrusion Seal ● |
| 2:4 | | 2 | Seal ● |
| 2:5 | | 2 | Seal Square Section ● |

● Not serviced separately

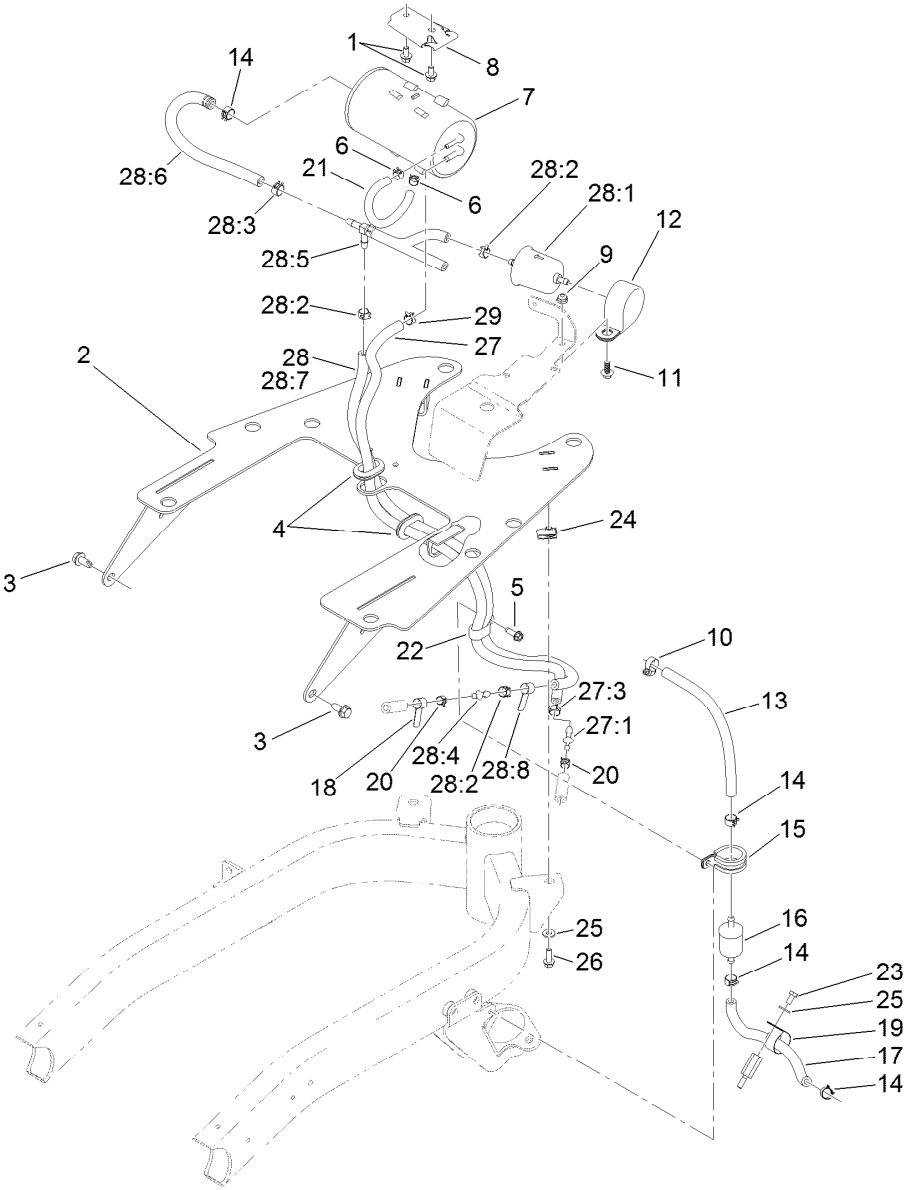


# Fuel Line and Carbon Canister Hose Routing Assembly

| Ref. | Part Number | Qty. | Description |
|---|---|---|---|
| 1 | 3234-13 | 2 | Screw-HHF |
| 2 | 121-5176-03 | 1 | Plate-Mount, Tank |
| 3 | 32104-32 | 2 | Screw-HWH |
| 4 | 240-5 | 2 | Grommet |
| 5 | 49-2040 | 1 | Screw-HWHTF |
| 6 | 2412-146 | 3 | Clamp-Hose |
| 7 | 115-2251 | 1 | Canister-Carbon |
| 8 | 114-0292 | 1 | Bracket-Canister, Carbon |
| 9 | 104-7201 | 2 | Nut-HF |
| 10 | 2412-108 | 1 | Clamp-Worm |
| 11 | 99-6810 | 1 | Screw-HHF |
| 12 | 100-1424 | 1 | Clamp-R |
| 13 | 109-0282 | 1 | Hose-Fuel |
| 14 | 92-2379 | 3 | Clamp-Hose |
| 15 | 120-2037 | 1 | R-Clamp |
| 16 | 94-2690 | 1 | Filter-Fuel |
| 17 | 109-0293 | 1 | Hose-Fuel |
| 18 | 121-6664 | 1 | Decal-Cleaner, Air |
| 19 | 2412-104 | 1 | Clamp-R |
| 20 | 2412-80 | 1 | Clamp-Hose |
| 21 | 119-8523 | 1 | Hose-Fuel |
| 22 | 119-8153 | 1 | Clamp-R, Double Tube |
| 23 | 33113-012 | 1 | Screw-HH |
| 24 | 107069 | 2 | Clip |
| 25 | 3256-22 | 3 | Washer-Flat |
| 26 | 115-5103 | 2 | Screw-HHF |
| 27 | 121-5181 | 1 | Purge Hose ASM |
| 27:1 | 121-2573 | 1 | Fitting-Straight |
| 27:3 | 2412-98 | 2 | Clamp-Hose |
| 28 | | 1 | Tee Hose ASM ● |
| 28:1 | 121-2583 | 1 | Filter-Fuel, Inline |
| 28:2 | 2412-98 | 3 | Clamp-Hose |
| 28:3 | 92-2379 | 2 | Clamp-Hose |

● Not serviced separately

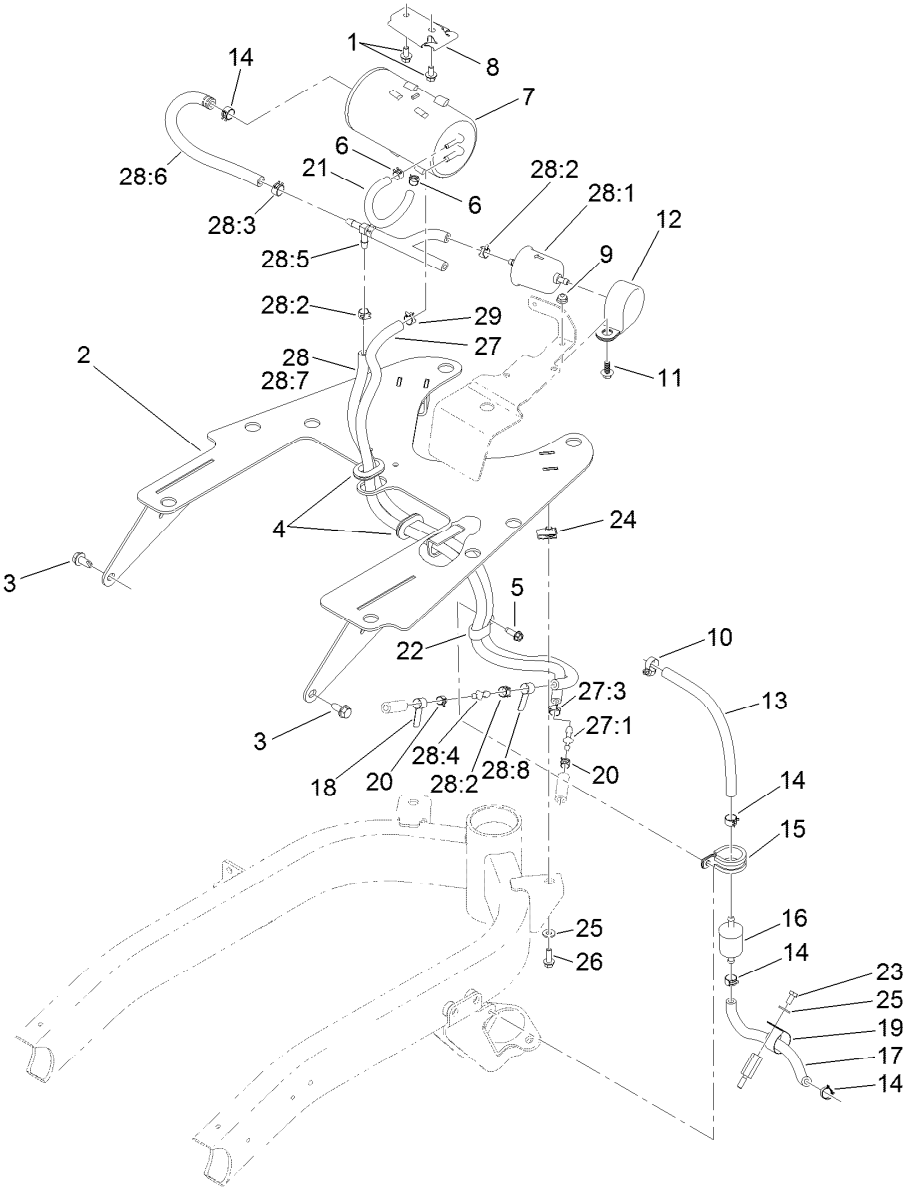


# Fuel Line and Carbon Canister Hose Routing Assembly (continued)

| Ref. | Part Number | Qty. | Description |
|---|---|---|---|
| 28:4 | 121-2573 | 1 | Fitting-Straight |
| 28:5 | 121-6663 | 1 | Check Valve Hose ASM |
| 28:6 | 110-4105 | 1 | Hose-Fuel |
| 28:7 | 109-3491 | 1 | Hose-Fuel |
| 28:8 | 121-6664 | 1 | Decal-Cleaner, Air |
| 29 | 2412-98 | 1 | Clamp-Hose |

● Not serviced separately

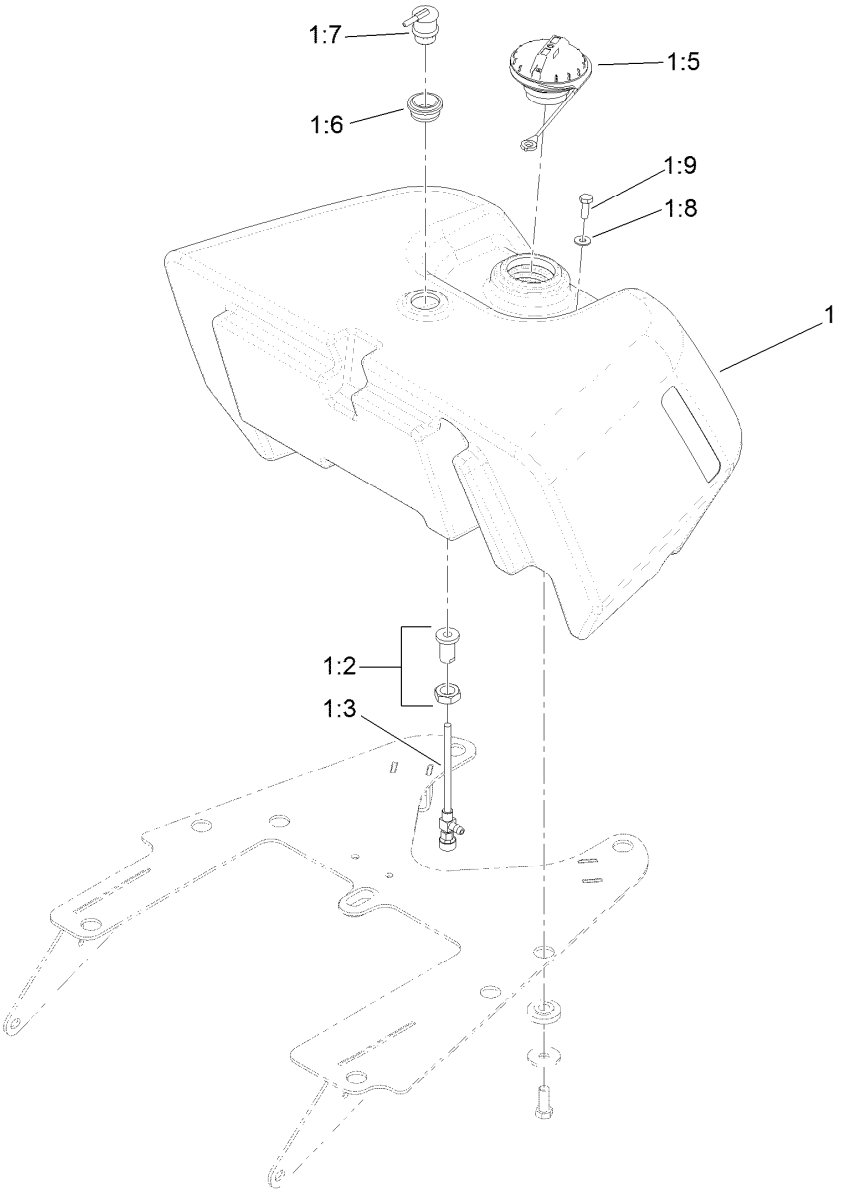


# Fuel Tank Assembly

| *Ref.* | *Part Number* | *Qty.* | *Description* |
|---|---|---|---|
| 1 | 121-5157 | 1 | Fuel Tank ASM |
| 1:2 | 114-4677 | 1 | Bulkhead ASM |
| 1:3 | 114-4679 | 1 | Fitting-Shut Off, Fuel |
| 1:5 | 117-1722 | 1 | Cap-Fuel |
| 1:6 | 114-0284 | 1 | Grommet |
| 1:7 | 119-3547 | 1 | Valve-Vent, Fuel |
| 1:8 | 3256-1 | 1 | Washer-Flat |
| 1:9 | 321-2 | 1 | Screw-HH |

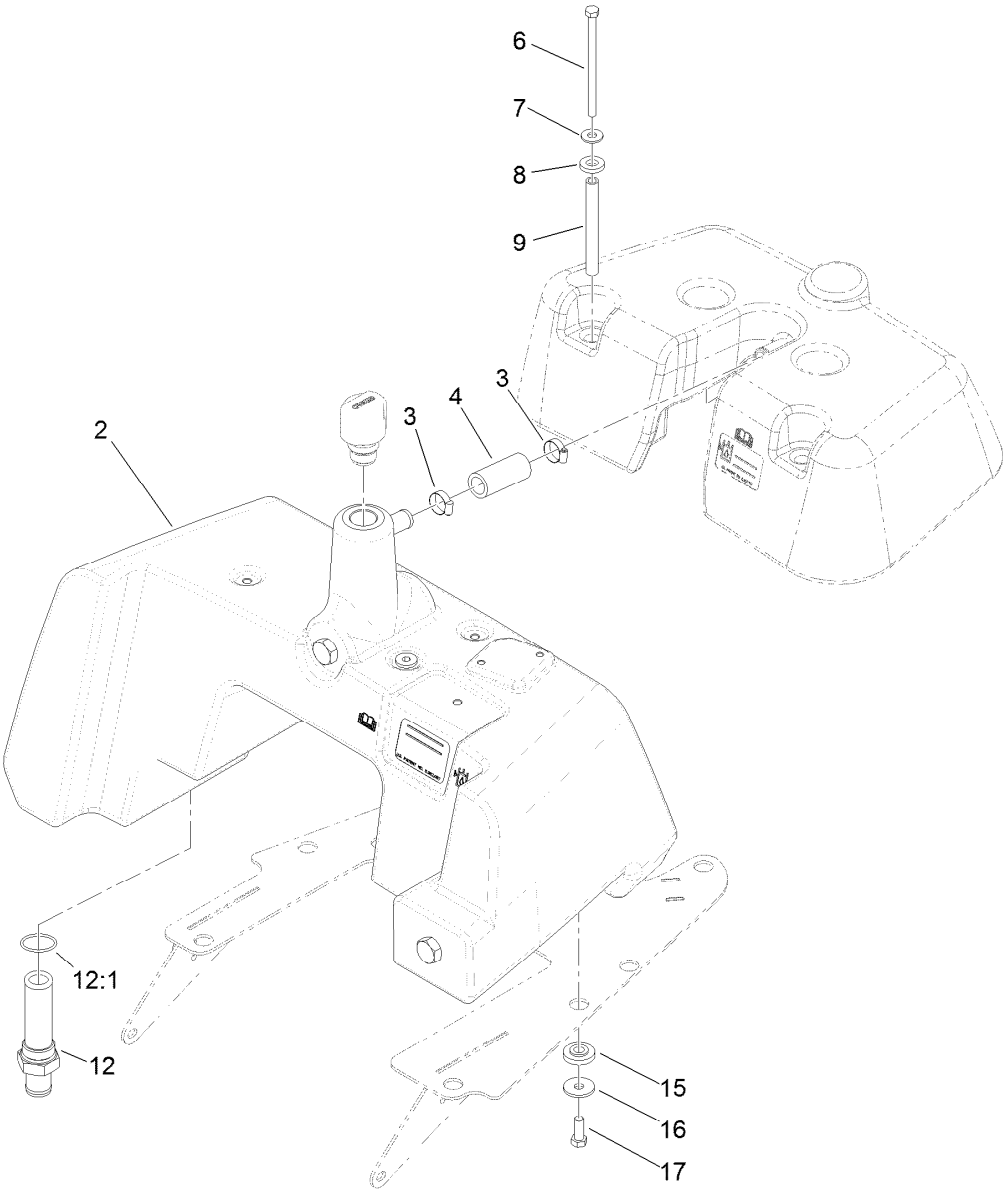


# Hydraulic Tank Assembly

| Ref. | Part Number | Qty. | Description |
|---|---|---|---|
| 2 | 115-9822 | 1 | Tank-Hydraulic |
| 3 | 2412-141 | 2 | Clamp-Drive, Worm |
| 4 | 110-3998 | 1 | Hose-Overflow |
| 6 | 322-29 | 4 | Screw-HH |
| 7 | 3256-71 | 4 | Washer-Flat |
| 8 | 83-1470 | 4 | Washer-Neoprene |
| 9 | 115-9825 | 4 | Spacer-Tube, Long |
| 12 | 112-0211 | 1 | Strainer Fitting ASM |
| 12:1 | 237-146 | 1 | O-Ring |
| 15 | 240-11 | 8 | Bushing-Flange |
| 16 | 63-8410 | 8 | Washer |
| 17 | 323-6 | 8 | Screw-HH |

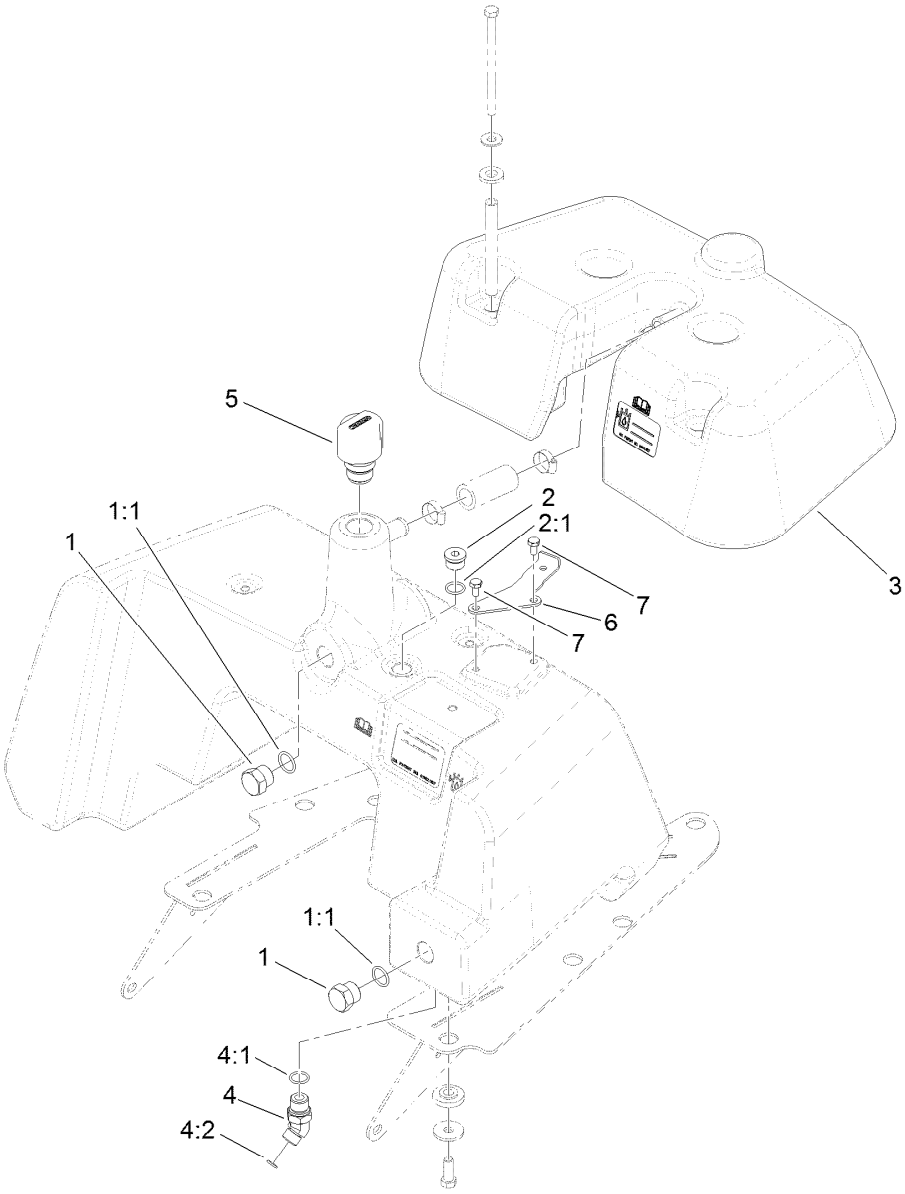


# Hydraulic Tank Cover Assembly

| *Ref.* | *Part Number* | *Qty.* | *Description* |
|---|---|---|---|
| 1 | 353-551 | 2 | Plug-HH |
| 1:1 | 237-80 | 1 | O-Ring |
| 2 | 353-988 | 1 | Plug-Hex |
| 2:1 | 237-79 | 1 | O-Ring |
| 3 | 120-2041 | 1 | Tank-Cover |
| 4 | 340-138 | 1 | Fitting-HYD, 45 DEG |
| 4:1 | 237-79 | 1 | O-Ring |
| 4:2 | 237-22 | 1 | O-Ring |
| 5 | 115-9793 | 1 | Breather |
| 6 | 121-5182 | 1 | Plate-Filter |
| 7 | 120-9688 | 2 | Screw-HH |

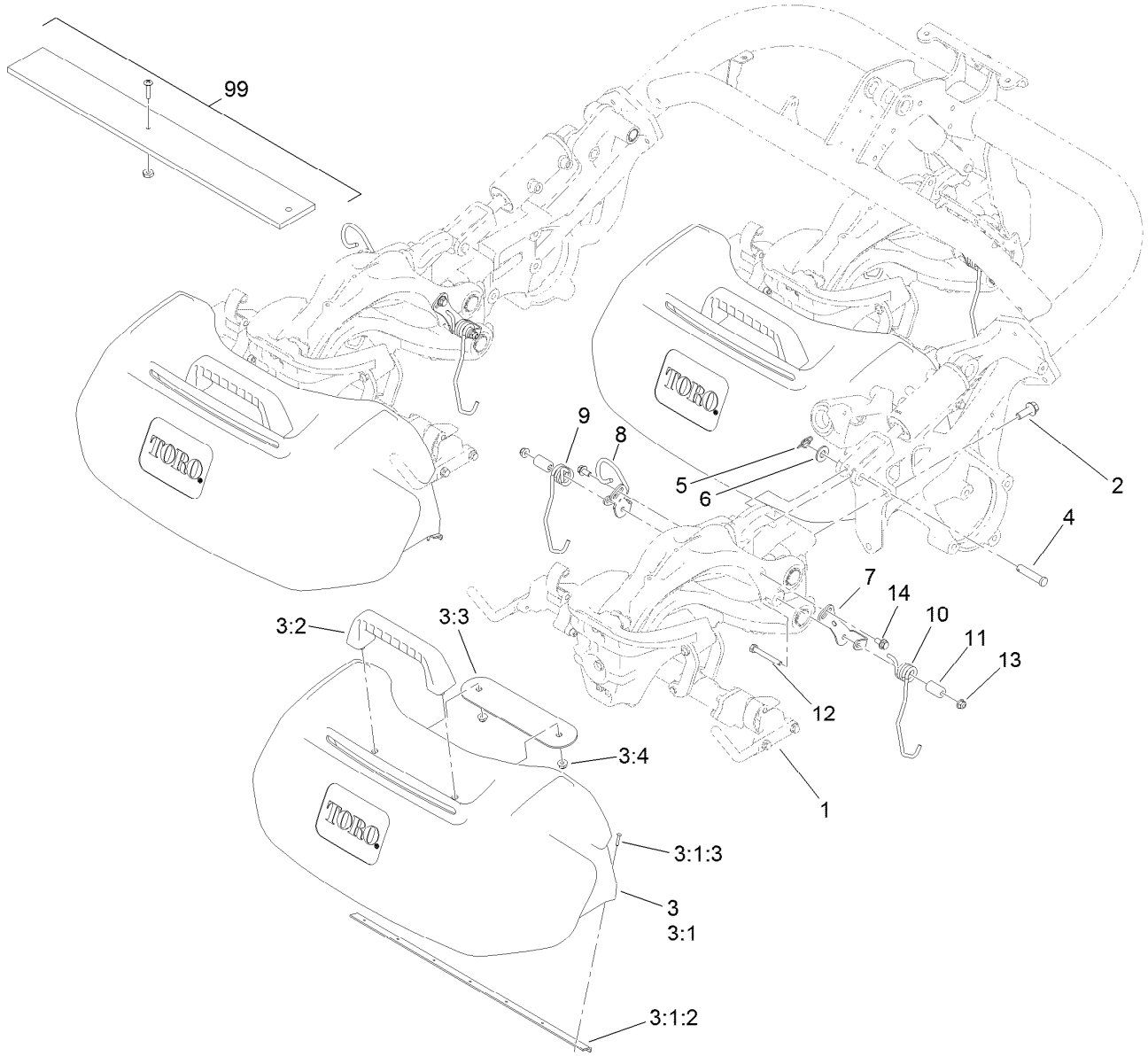


# Suspension and Basket Assembly

| Ref. | Part Number | Qty. | Description |
|---|---|---|---|
| 1 | | 3 | Suspension ASM ● |
| 2 | 117-9035 | 9 | Screw-HHF |
| 3 | 117-8096 | 3 | Basket ASM |
| 3:1 | 117-8094 | 1 | Grass Basket ASM |
| 3:1:2 | 115-5274 | 1 | Support-Basket |
| 3:1:3 | 3290-382 | 7 | Rivet-Pop |
| 3:2 | 117-8088 | 1 | Handle-Grab |
| 3:3 | 117-8092-03 | 1 | Plate-Mounting |
| 3:4 | 104-8300 | 2 | Nut-HF, NI |
| 4 | 92-2739 | 3 | Pin-Clevis |
| 5 | 112-1491 | 3 | Pin-Cotter |
| 6 | 29-8910 | 3 | Washer |

| Ref. | Part Number | Qty. | Description |
|---|---|---|---|
| 7 | 117-6822 | 3 | Retainer-Spring, LH |
| 8 | 120-4617 | 3 | Bracket ASM |
| 9 | 117-6826 | 3 | Spring-Stabilizer, RH |
| 10 | 117-6827 | 3 | Spring-Stabilizer, LH |
| 11 | 117-6825 | 6 | Spacer |
| 12 | 322-12 | 6 | Screw-HH |
| 13 | 104-8300 | 6 | Nut-HF, NI |
| 14 | 114-7728 | 6 | Screw-Threadlock |
| 99 | 32122-22 | 1 | Screw-PTH |
| 99 | 3219-14 | 1 | Nut-Hex |
| 99 | 65-8320 | 1 | Bar-Gauge |

● Not serviced separately

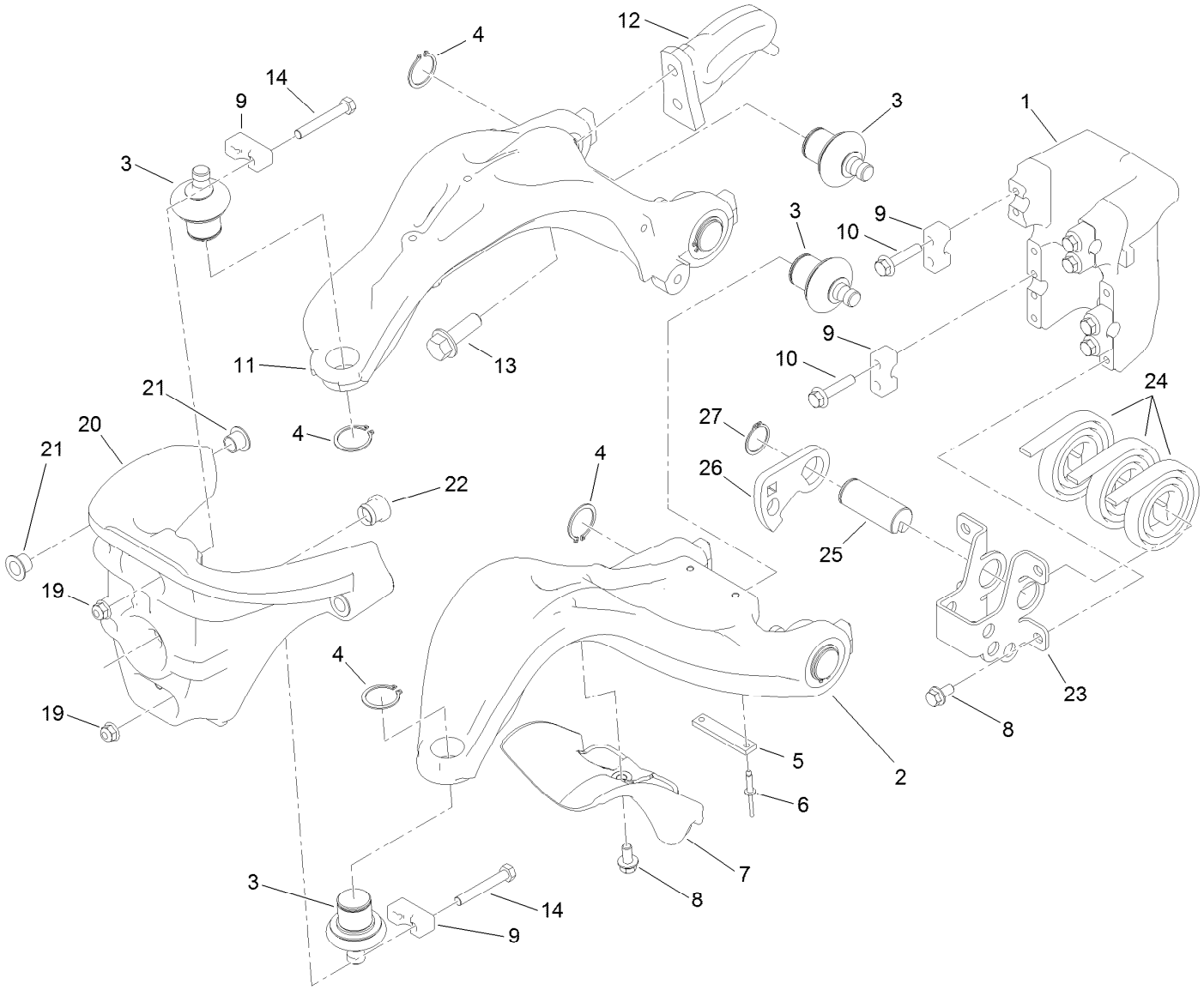


# Suspension A-Arm Assembly

| Ref. | Part Number | Qty. | Description |
|---|---|---|---|
| 1 | 117-9480 | 1 | Mount-Pivot, A-Arms |
| 2 | 117-6656 | 1 | A-Arm, Lower |
| 3 | 117-6658 | 6 | Balljoint |
| 4 | 120-3225 | 6 | Ring-Retaining, EXT |
| 5 | 117-6674 | 1 | Plate-Striker |
| 6 | 3269-28 | 2 | Rivet-Pop |
| 7 | 117-6755 | 1 | Stop-Steering |
| 8 | 114-7728 | 5 | Screw-Threadlock |
| 9 | 112-5647 | 6 | Clamp |
| 10 | 132-3837 | 8 | Screw-HHF |
| 11 | 117-6648 | 1 | A-Arm, Upper |
| 12 | 117-6650 | 1 | Plate-Lift |

| Ref. | Part Number | Qty. | Description |
|---|---|---|---|
| 13 | 100-6116 | 2 | Screw-HHF |
| 14 | 132-3838 | 4 | Screw-HH |
| 19 | 104-8300 | 4 | Nut-HF, NI |
| 20 | 120-3216 | 1 | Steering Head ASM |
| 21 | 93-2561 | 4 | Bushing-Flange |
| 22 | 117-6819 | 1 | Grommet |
| 23 | 117-6730 | 1 | Mount-Counterbalance |
| 24 | 114-9306 | 3 | Spring |
| 25 | 117-6608 | 1 | Pin |
| 26 | 117-6738 | 1 | Arm-Tensioner |
| 27 | 32151-29 | 1 | Ring-Retaining |

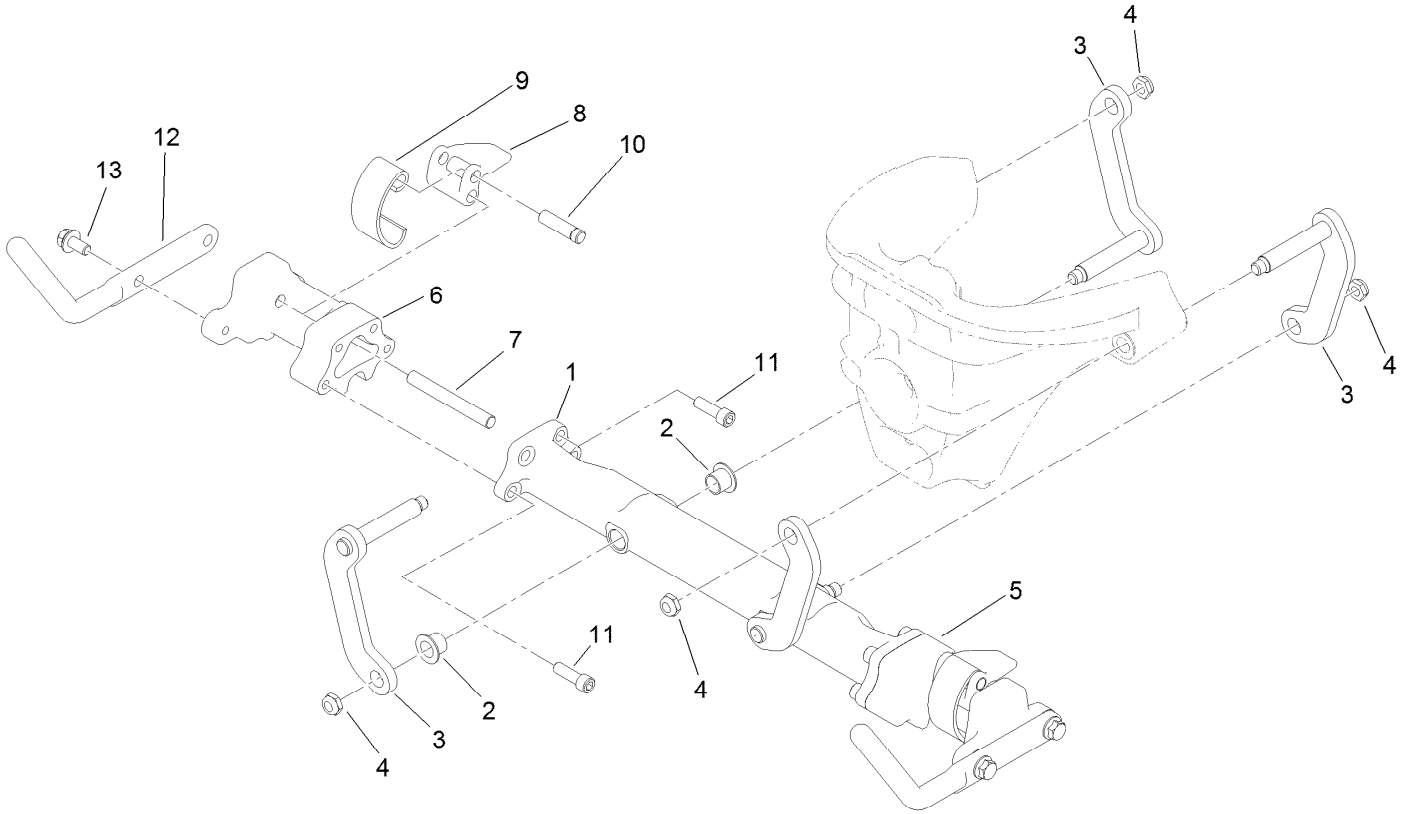


# Suspension Crossarm Assembly

| Ref. | Part Number | Qty. | Description |
|---|---|---|---|
| 1 | 120-3217 | 1 | Crossarm ASM |
| 2 | 93-2561 | 4 | Bushing-Flange |
| 3 | 117-6654 | 4 | Link ASM |
| 4 | 3296-59 | 4 | Nut-Lock, NI |
| 5 | 117-9482 | 1 | Mount-Cross Arm, LH |
| 6 | 117-9492 | 1 | Mount-Cross Arm, RH |
| 7 | 114-8051 | 2 | Pin-Pivot |
| 8 | 114-8047 | 2 | Lever |
| 9 | 114-8048 | 2 | Spring |
| 10 | 114-8049 | 2 | Pin-Pivot |
| 11 | 120-3227 | 8 | Screw-HSH |
| 12 | 117-8091-03 | 2 | Horn-Basket |
| 13 | 114-7728 | 4 | Screw-Threadlock |

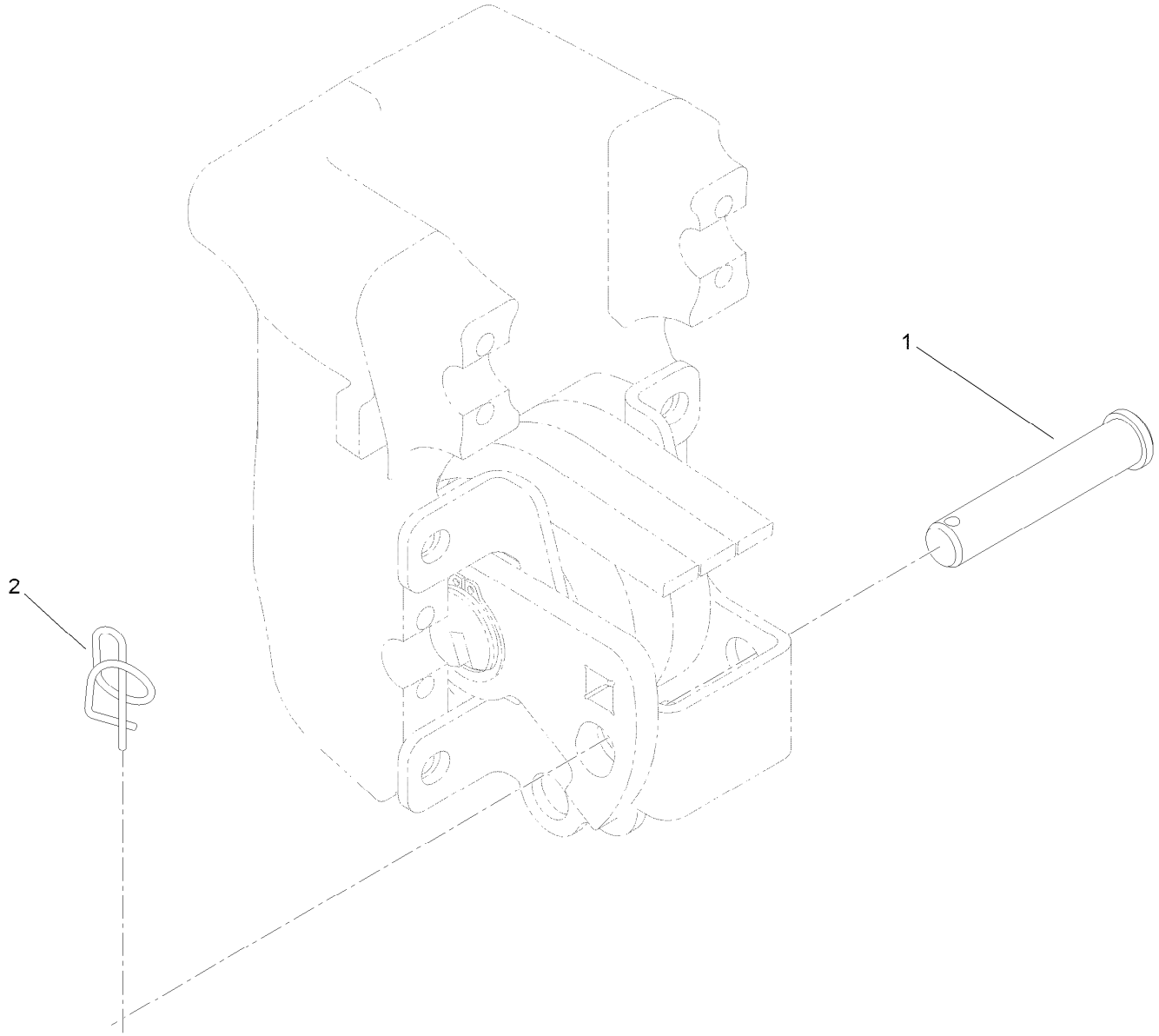


# Suspension Pin Position Assembly

| Ref. | Part Number | Qty. | Description |
|---|---|---|---|
| 1 | 100-6541 | 3 | Pin-Clevis |
| 2 | 112-1491 | 3 | Pin-Cotter |

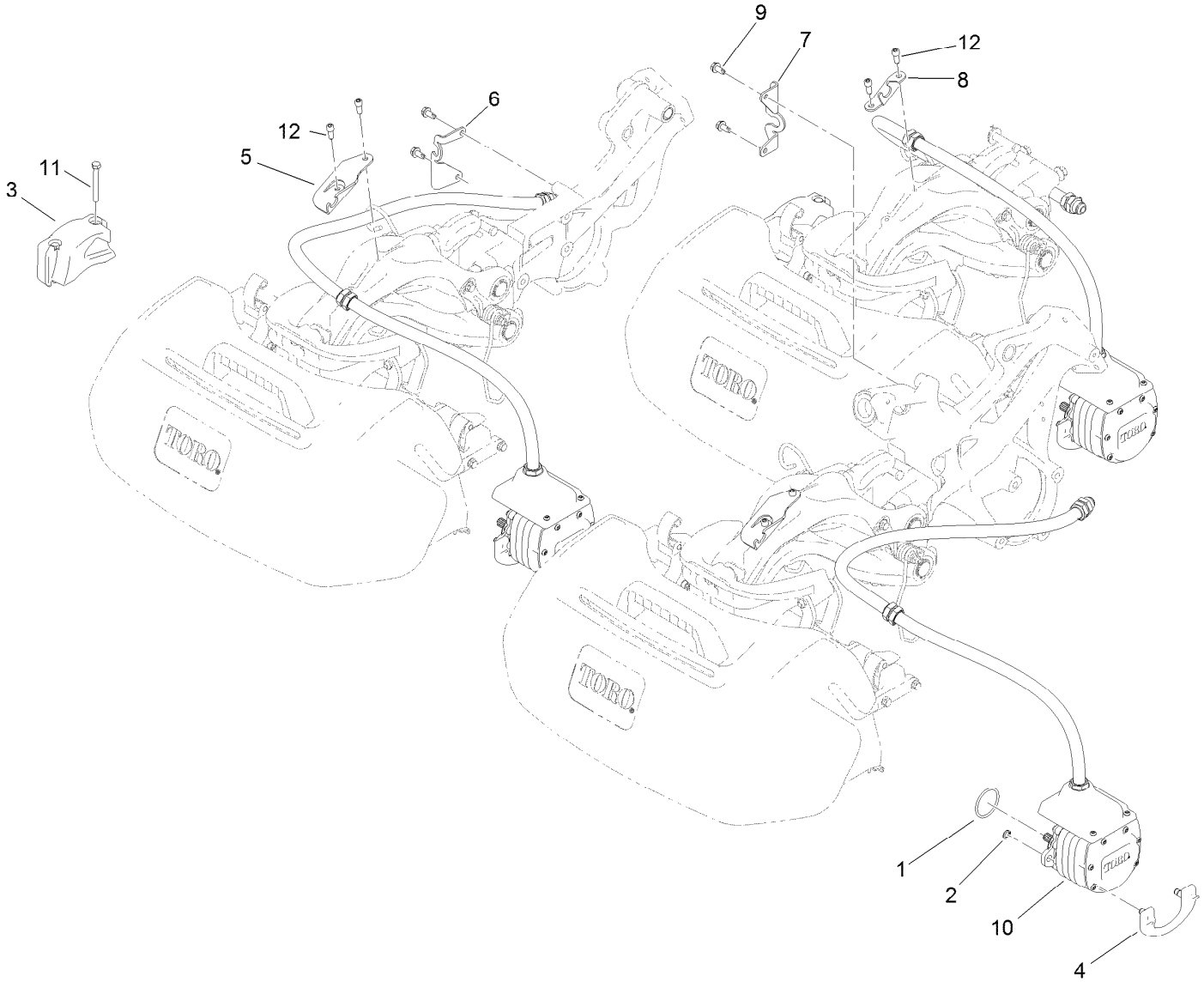


# Electric Reel Motor Assembly

| Ref. | Part Number | Qty. | Description |
|---|---|---|---|
| 1 | 115-3298 | 3 | O-Ring |
| 2 | 115-5206 | 6 | Ring-Retaining |
| 3 | 117-6774-03 | 3 | Weight-Electric |
| 4 | 115-5389 | 3 | Cam-Mount, Motor |
| 5 | 119-7487 | 2 | Bracket-Clamp, Hose |
| 6 | 120-4551 | 1 | Bracket-Hose |
| 7 | 120-4531 | 1 | Bracket-Hose |
| 8 | 119-7540 | 1 | Bracket-Hose, Rear |
| 9 | 32104-32 | 4 | Screw-HWH |
| 10 | 119-7575 | 3 | Electric Reel Motor ASM |
| 11 | 322-13 | 6 | Screw-HH |
| 12 | 100-2401 | 6 | Screw-HSH |

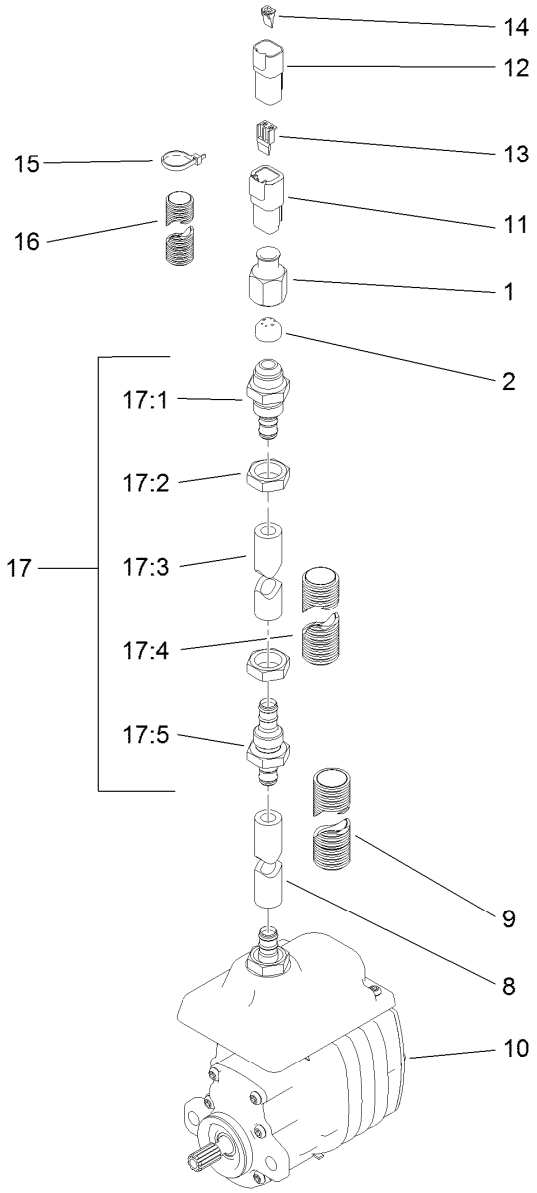


# Electric Reel Motor Assembly No. 119-7575

| Ref. | Part Number | Qty. | Description |
|---|---|---|---|
| 1 | 119-7481 | 1 | Nut-Ferrule |
| 2 | 119-7480 | 1 | Ferrule |
| 8 | 119-7476 | 1 | Hose |
| 9 | 119-7558 | 1 | Tubing-Convoluted, Slit |
| 10 | | 1 | Motor-Electric ● |
| 11 | 32160-245 | 1 | Connector |
| 12 | 32160-315 | 1 | Connector |
| 13 | 32180-083 | 1 | Wedge |
| 14 | 32180-084 | 1 | Wedge |

| Ref. | Part Number | Qty. | Description |
|---|---|---|---|
| 15 | 3290-378 | 4 | Tie-Cable |
| 16 | 120-3223 | 1 | Tubing-Convoluted, Slit |
| 17 | 120-4532 | 1 | Hose ASM |
| 17:1 | 119-7545 | 1 | Fitting-Bulkhead |
| 17:2 | 119-7457 | 2 | Nut |
| 17:3 | 119-7524 | 1 | Hose |
| 17:4 | 119-7559 | 1 | Tubing-Convoluted, Slit |
| 17:5 | 119-7544 | 1 | Fitting-Bulkhead |

● Not serviced separately

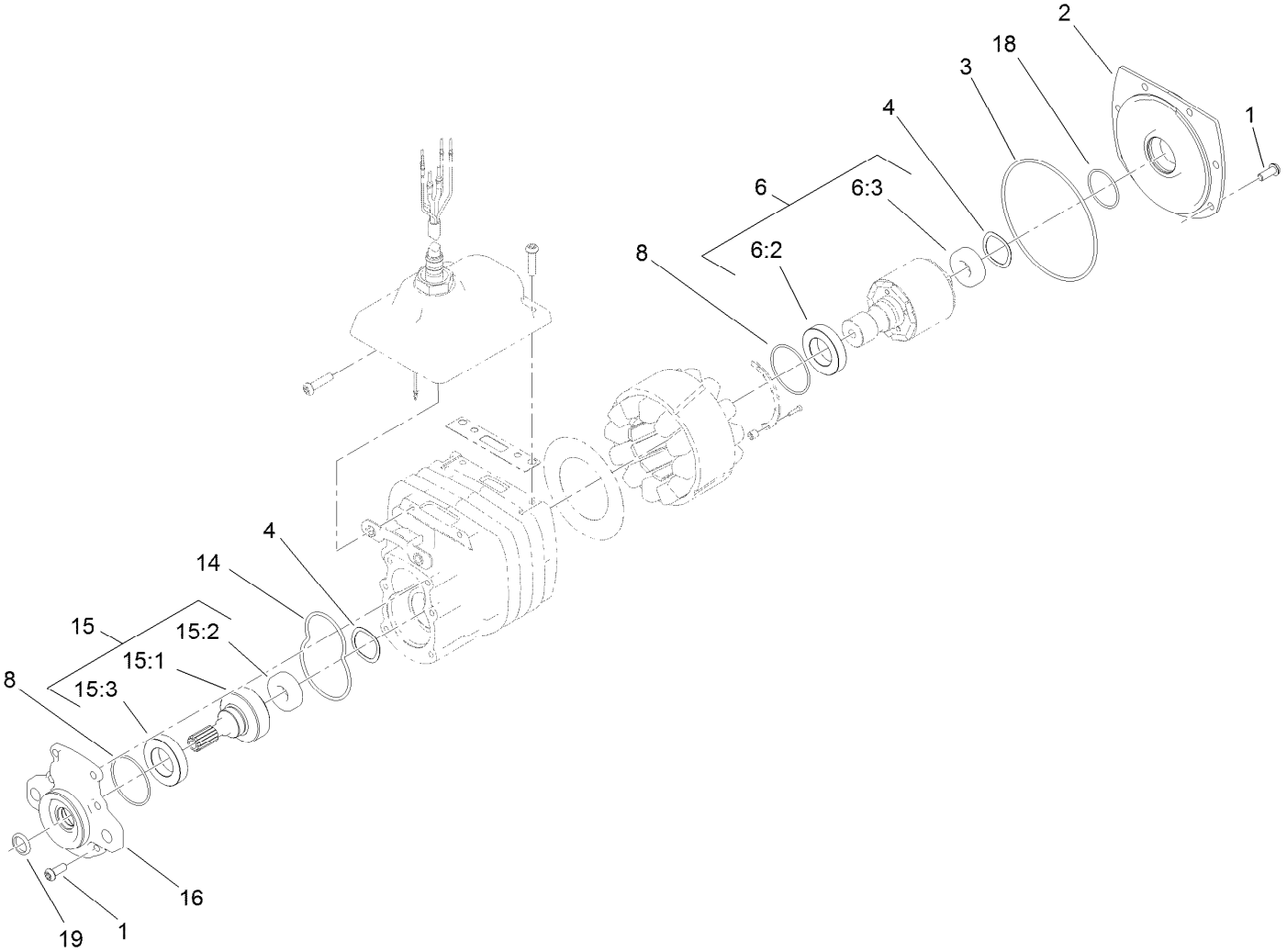


# Electric Motor Assembly

| Ref. | Part Number | Qty. | Description |
|---|---|---|---|
| 1 | 120-4559 | 12 | Screw-Bhcs |
| 2 | 115-4779 | 1 | Cover-Motor |
| 3 | 112-9609 | 1 | O-Ring |
| 4 | 112-5163 | 2 | Washer-Wave |
| 6 | 119-7450 | 1 | Rotor ASM |
| 6:2 | 112-5158 | 1 | Bearing-Ball |
| 6:3 | 120-4557 | 1 | Bearing |
| 8 | 112-9616 | 2 | O-Ring |

| Ref. | Part Number | Qty. | Description |
|---|---|---|---|
| 14 | 112-9611 | 1 | O-Ring |
| 15 | 115-4782 | 1 | Output Gear ASM |
| 15:1 | 112-5153 | 1 | Gear-Output |
| 15:2 | 120-4557 | 1 | Bearing |
| 15:3 | 112-5158 | 1 | Bearing-Ball |
| 16 | 115-4777 | 1 | Cover-Gearbox |
| 18 | 119-1156 | 1 | O-Ring |
| 19 | 119-7451 | 1 | Seal-Oil |

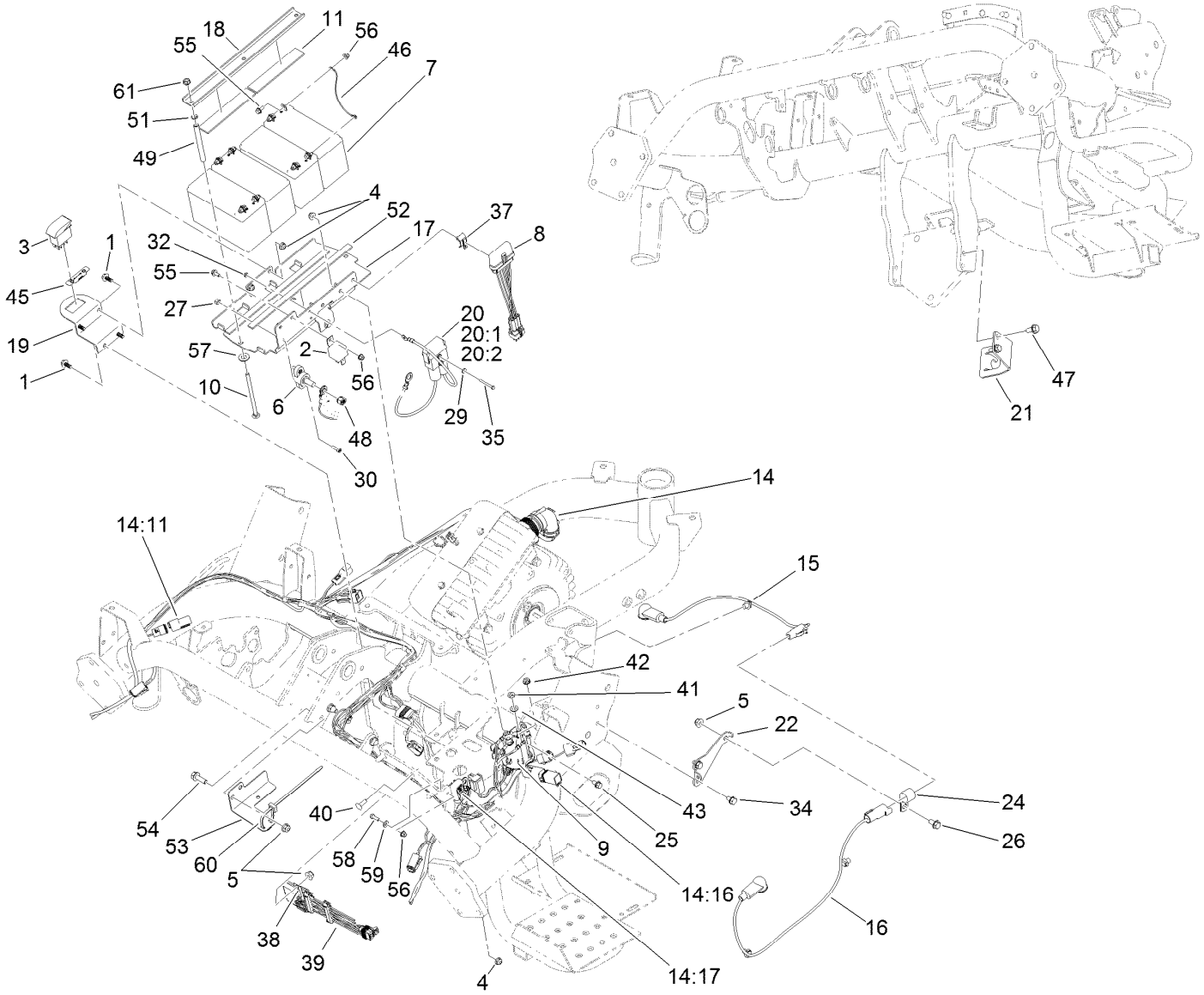


# Electric Mow Battery Assembly

| Ref. | Part Number | Qty. | Description |
|---|---|---|---|
| 1 | 99-6810 | 5 | Screw-HHF |
| 2 | 99-7435 | 1 | Relay-Power |
| 3 | 100-8490 | 1 | Switch-Rocker, On-None-On |
| 4 | 104-7201 | 5 | Nut-HF |
| 5 | 104-8300 | 3 | Nut-HF, NI |
| 6 | 110-8823 | 1 | Block-Junction |
| 7 | 112-9621 | 4 | Battery- Nonspillable |
| 8 | 112-9630 | 1 | Module-Reel, I.D. |
| 9 | 115-4765 | 1 | Contactor |
| 10 | 120-4585 | 3 | Screw-CARR |
| 11 | 115-9477 | 2 | Strip-Foam |
| 14 | 121-6565 | 1 | Wire Harness ASM |
| 14:11 | 32180-043 | 2 | Resistor-120 Ohm |
| 14:16 | 119-7781 | 1 | Diode-Sealed |
| 14:17 | 120-3958 | 1 | Fuse-Blade, 10A |
| 15 | 119-1783 | 1 | Harness-Wire, Battery Disconnect |
| 16 | 119-1784 | 1 | Harness-Wire, Battery Disconnect |
| 17 | 119-2103-01 | 1 | Plate-Battery |

| Ref. | Part Number | Qty. | Description |
|---|---|---|---|
| 18 | 119-2104-01 | 1 | Channel-Clamp, Battery |
| 19 | 121-6669-01 | 1 | Bracket-Backlap |
| 20 | 119-5773 | 1 | Harness-Wire |
| 20:1 | 120-3954 | 1 | Fuse-60 Amp |
| 20:2 | 32180-085 | 1 | Fuse-Cover |
| 21 | 119-7566-03 | 1 | Bracket-Hose, Rear |
| 22 | 119-8175 | 1 | Bracket-Disconnect |
| 24 | 2412-4 | 1 | Clamp-R |
| 25 | 3234-13 | 2 | Screw-HHF |
| 26 | 3234-7 | 1 | Screw-HHF |
| 27 | 3296-21 | 2 | Nut-Hex |
| 29 | 3256-12 | 2 | Washer-Flat |
| 30 | 3273-26 | 2 | Screw-HSH |
| 32 | 3296-9 | 2 | Nut-Hex |
| 34 | 32104-82 | 2 | Screw-HHF |
| 35 | 32105-21 | 2 | Screw-HH |
| 37 | 32180-011 | 1 | Clip-Connector |
| 38 | 32180-020 | 1 | Clip-Connector |
| 39 | 119-4330 | 1 | Isolated Can Module ASM |
| 40 | 1-807512 | 1 | Bolt-CARR |
| 41 | 3220-2 | 2 | Nut-Jam |

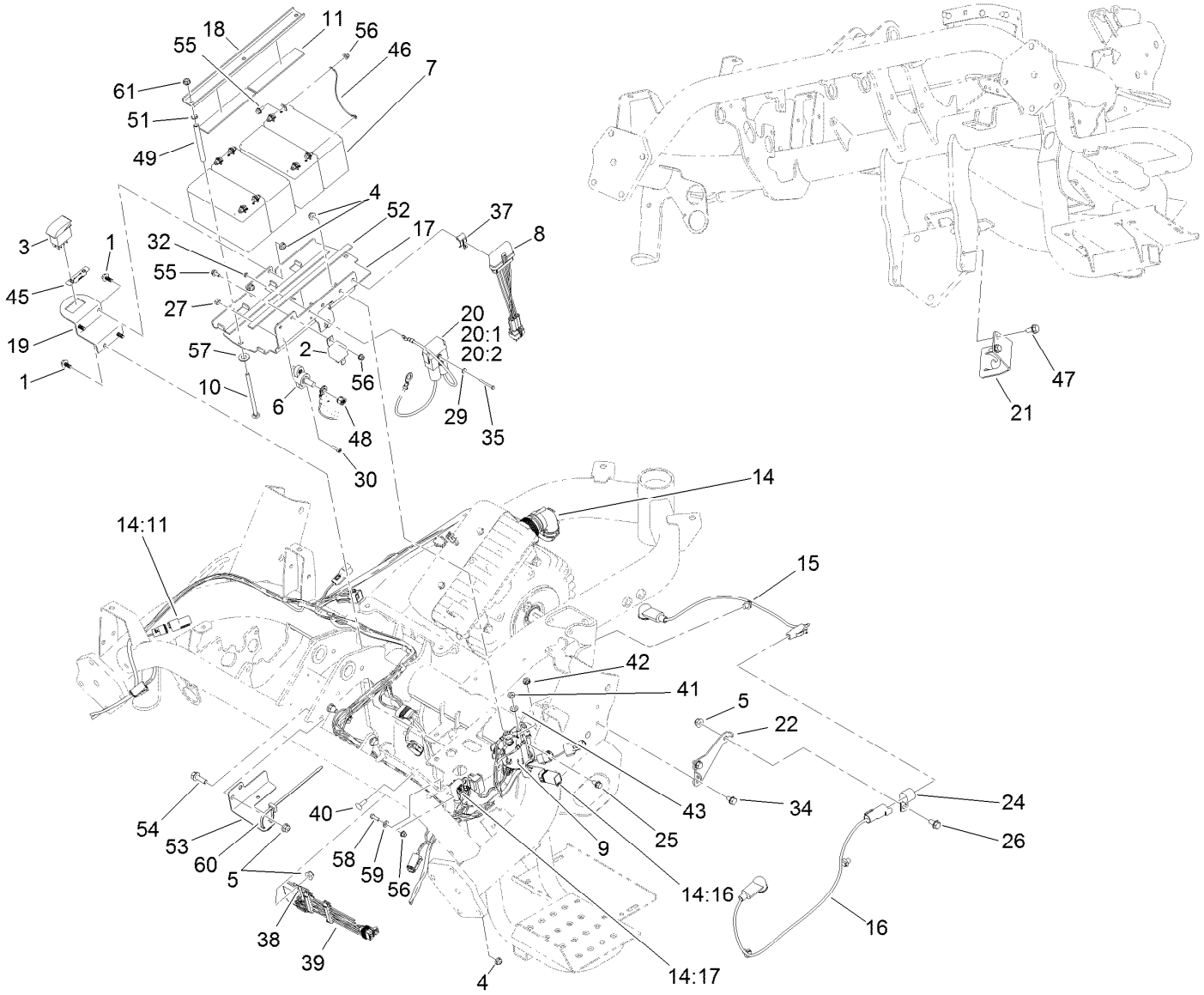


# Electric Mow Battery Assembly (continued)

| Ref. | Part Number | Qty. | Description |
|---|---|---|---|
| 42 | 32149-8 | 2 | Nut-Keps |
| 43 | 3253-4 | 2 | Washer-Lock |
| 45 | 121-6670 | 1 | Decal-Backlap |
| 46 | 119-1782 | 3 | Battery Jumper Wire Harness ASM |
| 47 | 32144-14 | 2 | Screw-HWHTF |
| 48 | 32149-10 | 1 | Nut-Keps |
| 49 | 120-4586 | 3 | Tube |
| 51 | 1-803037 | 3 | Nut-Retaining |
| 52 | 115-8827 | 2 | Foam-Strip |

| Ref. | Part Number | Qty. | Description |
|---|---|---|---|
| 53 | 120-4570 | 1 | Bracket-Harness |
| 54 | 3234-29 | 2 | Screw-HHF |
| 55 | 120-4579 | 9 | Screw-Hfh |
| 56 | 120-4580 | 10 | Nut-HF |
| 57 | 48-9220 | 3 | Washer-Plain |
| 58 | 60-6910 | 1 | Screw-HH |
| 59 | 3256-14 | 1 | Washer-Flat |
| 60 | 3290-378 | 1 | Tie-Cable |
| 61 | 32128-33 | 3 | Nut-HF |

# Attachments and Accessories

## For 04530 Greensmaster 3320 2-Wheel Drive Traction Unit

| Product Name | Model/Part |
|---|---|
| Turf Evaluator | 04399 |
| 8-Blade DPA Reel Mower | 04613 |
| 11-Blade DPA Reel Mower | 04614 |
| 14-Blade DPA Reel Mower | 04615 |
| Three-Wheel Drive Kit | 04714 |
| Hydraulic Oil Leak Detector Kit | 04715 |
| Light Kit | 04717 |
| Standard Seat Kit | 04718 |
| Premium Seat Kit | 04719 |
| Spark Arrestor Screen | 104-6540 |
| Premium All Season Hydraulic Fluid (55 Gallon Drum) | 108-1177 |
| Premium All Season Hydraulic Fluid (5 Gallon Pail) | 108-1178 |
| Premium Engine Oil, 10w30 (55 Gallon Drum) | 108-1179 |
| Premium Engine Oil, 10w30 (5 Gallon Pail) | 108-1180 |
| Bimini Folding Shade Assembly | 115-4510 |
| Bag Kit | 119-1715 |
| Premium Synthetic Bio-Degradable Hydraulic Fluid (5 Gallon Pail) | 119-2157 |
| Premium Synthetic Bio-Degradable Hydraulic Fluid (55 Gallon Drum) | 119-2158 |
| Premium Armrest Kit | 119-7105 |
| Weight Kit | 119-7129 |
| Three-Wheel Drive Weight Kit | 120-5750 |
| 400-hour Filter Maintenance Kit | 30042 |
| LH Armrest Asm | 92-7307 |
| Tire-TURFMATE | 99-4506 |

**Notes:**

**Notes:**

**Notes:**

TORO®

Count on it.