Form No. 3367-934 Rev C

TORO®

Count on it.

Parts Catalog

Workman® HD Utility Vehicle with Bed

Model No. 07369—Serial No. 311000001 and Up

Register at www.Toro.com.
Original Instructions (EN)

3367-934 C

Ordering Replacement Parts

To order replacement parts, please supply the part number, the quantity, and the description of each part desired.

Understanding Reference Numbers

Each identified part in an illustration has a reference number. The reference number for a part also appears in the parts list, along with other information about the part.

This catalog uses two special reference number formats, one to indicate parts in a service assembly and another to indicate the quantity of a given part in an illustration.

Service Assembly Reference Numbers

Parts in service assemblies have reference numbers in the form a:b. The a represents the reference number of the entire service assembly and the b represents a sequential number unique to each part within the service assembly.

For example, a wheel assembly might be identified by reference number 6, the tire by 6:1, the valve by 6:2, and the wheel by 6:3. When you order the assembly identified by reference number 6, you receive all parts identified by reference numbers 6:1,6:2, and 6:3. However, you may also order any part individually. Reference numbers of this type appear in illustration and in parts lists.

Reference Numbers Indicating Quantity

In an illustration, if a reference number indicates more than one part, the reference number has the form nX y. The n represents the quantity of the part, the X is the multiplication symbol, and the y represents the reference number.

For example, in an illustration, the reference number 2X 37 means that two of the parts identified by reference number 37 are indicated.

Contents

Hood and Bumper Assembly . . . 4
Dash Assembly . . . 5
Pedal Assembly . . . 7
Master Cylinder Assembly No. 104-6782 . . . 8
Hydraulic Brake Line Assembly . . . 9
Clutch Linkage Assembly . . . 10
Shroud and Seat Assembly . . . 11
Console Assembly . . . 13
Shift Assembly No. 106-7887 . . . 15
Steering Hydraulic Assembly . . . 16
Steering Valve Assembly No. 115-7926 . . . 17
Lift Valve and Hydraulics Assembly . . . 18
Control Valve Assembly No. 43-1950 . . . 20
Hydraulic Cylinder Assembly No. 106-7939 . . . 21
Front Wheel Assembly . . . 22
Hydraulic Cylinder Assembly No. 112-3217 . . . 23
Steering Linkage Assembly . . . 24
Front Suspension Assembly . . . 25
Front Control Arm Assembly . . . 26
Rear Frame Assembly . . . 27
Rear Axle Assembly . . . 28
Driveshaft Assembly No. 114-8367 . . . 29
Transaxle Assembly . . . 30
Case Assembly Transaxle Assembly No. 115-7783 . . . 31
Center Plate Assembly Transaxle Assembly No. 115-7783 . . . 32
Main Shaft Assembly Transaxle Assembly No. 115-7783 . . . 33
Reduction Shaft Assembly Transaxle Assembly No. 115-7783 . . . 34
Reverse Shaft Assembly Transaxle Assembly No. 115-7783 . . . 35
Main Shift Assembly Transaxle Assembly No. 115-7783 . . . 36
Hi-Lo Shift Assembly Transaxle Assembly No. 115-7783 . . . 37
Countershaft Assembly Transaxle Assembly No. 115-7783 . . . 38
Differential Gear Assembly Transaxle Assembly No. 115-7783 . . . 39
Differential Carrier Assembly Transaxle Assembly No. 115-7783 . . . 40
Differential Lock Assembly Transaxle Assembly No. 115-7783 . . . 41
Axle Shaft Assembly Transaxle Assembly No. 115-7783 . . . 42
Battery Assembly . . . 43
Tail Light and Fender Assembly . . . 44
Roll-Over Protection System Assembly . . . 45
Relay Assembly . . . 46
Fuel System Assembly . . . 47
Engine Assembly . . . 48
Muffler Assembly . . . 50
Engine Support Assembly . . . 51
Hydraulic Gear Pump Assembly No. 112-2983 . . . 52
Full Bed and Side Panel Assembly . . . 53
Attachments and Accessories . . . 54

© 2017—The Toro® Company
8111 Lyndale Avenue South
Bloomington, MN 55420

Contact us at www.Toro.com.
Printed in the USA.
All Rights Reserved

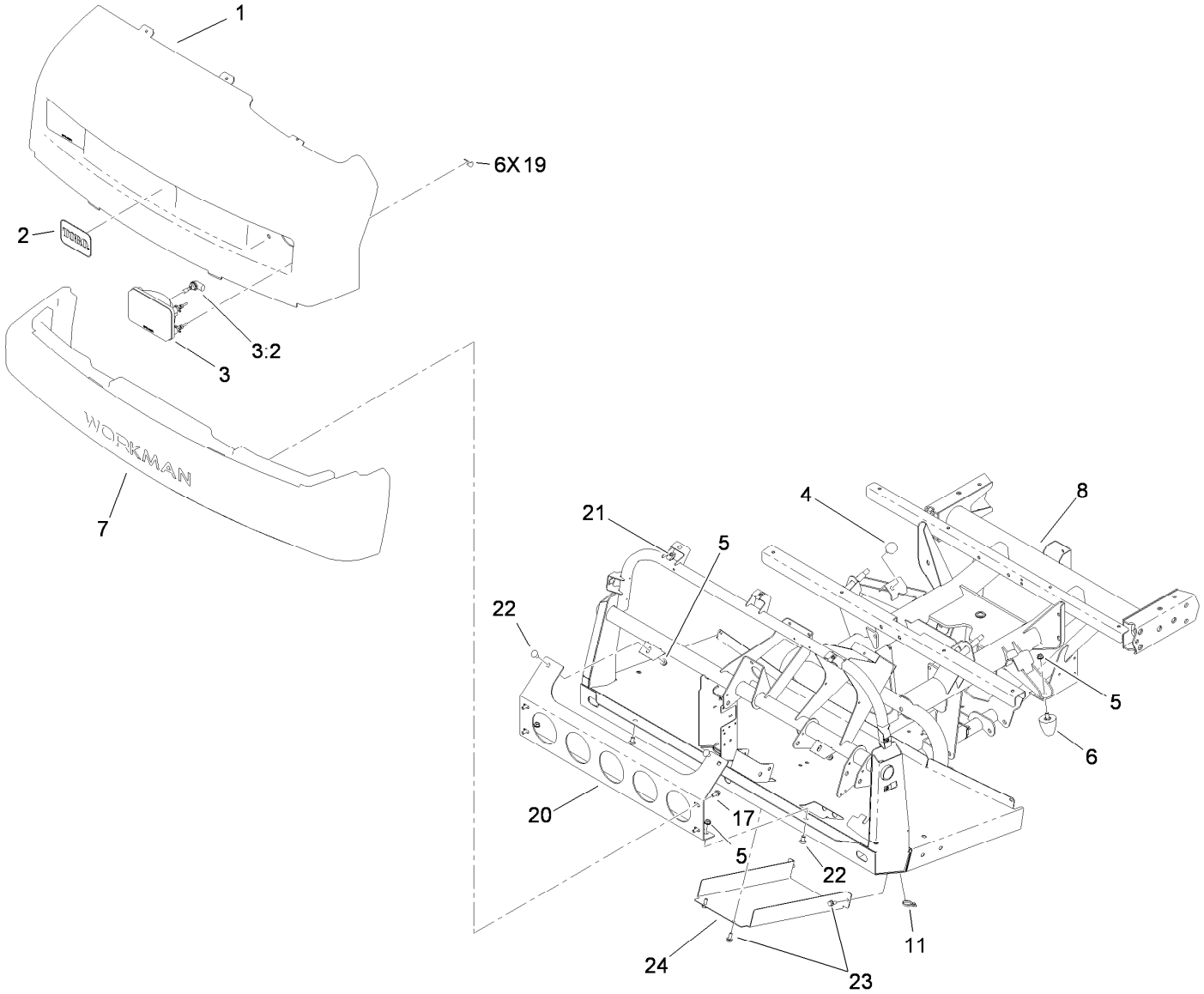

Hood and Bumper Assembly

Ref.	Part Number	Qty.	Description
1	112-3183	1	Hood
2	117-4950	1	Decal
3	114-8322	2	Headlight ASM
3:2	115-2395	1	Bulb-Light
4	87-2440	2	Bumper-Rubber
5	3290-357	6	Nut-HHF, Whiz
6	26-0071	2	Snubber-Rubber
7	112-3185	1	Bumper
8	119-0949-03	1	Frame-Front

Ref.	Part Number	Qty.	Description
11	3290-379	1	Tie-Cable
17	3234-5	4	Screw-HHF
19	114-8341	6	Clip
20	114-8272-03	1	Bracket-Bumper
21	94-2413	7	Nut-U
22	3231-21	4	Screw-CARR
23	32144-11	4	Screw-HWHTF
24	106-2427-03	1	Cover

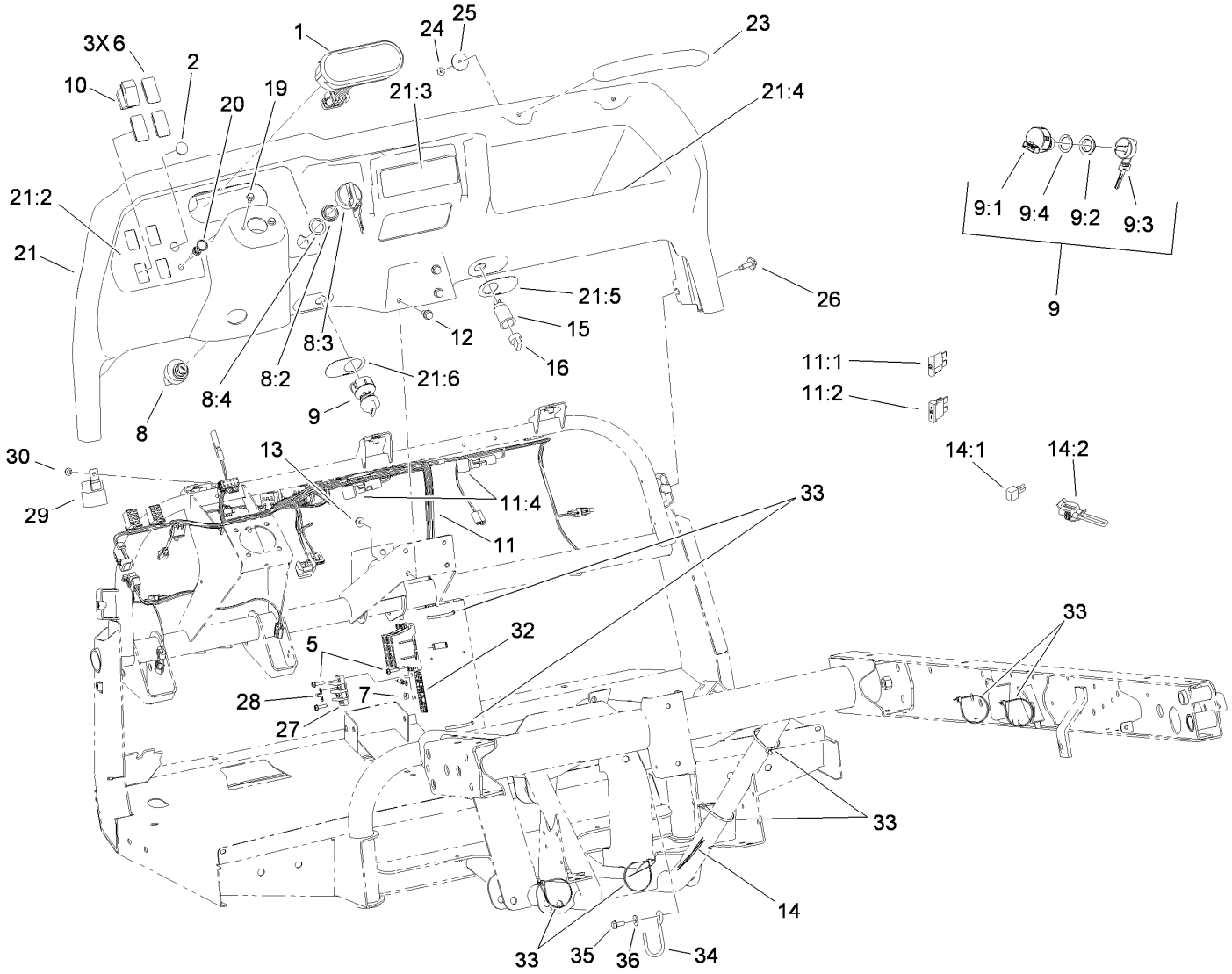

Dash Assembly

Ref.	Part Number	Qty.	Description
1	114-8300	1	Cluster-Instrument
2	94-5627	1	Plug
5	32105-13	6	Screw-HWH
6	99-7420	3	Plug-Hole
7	3290-148	6	Nut-HF
8	106-5269	1	Ignition Switch ASM
8:2	108-8660	1	Nut-Mounting
8:3	106-5270	1	Ignition Key Set
8:4	108-8659	1	Washer-Backup
9	110-2580	1	Switch-Key, Supervisor
9:1		1	Switch-Key ●
9:2	108-8660	1	Nut-Mounting
9:3	110-5221	1	Set-Key, Supervisor
9:4	108-8659	1	Washer-Backup
10	95-8999	1	Switch
11	117-4998	1	Harness-Wire, Front
11:1	218-578	5	Fuse-Blade, 10 Amp
11:2	109355	2	Fuse-Blade, 15 Amp

Ref.	Part Number	Qty.	Description
11:4	100-4918	2	Diode
12	3234-5	3	Screw-HHF
13	104-8300	3	Nut-HF, NI
14	114-8380	1	Harness-Wire, Rear
14:1	100-4918	1	Diode
14:2	119-7787	1	Harness-Wire, Vertical Lift Shunt
15	99-7411	1	Point-Power
16	99-7416	1	Cap
19	33103-012	2	Screw-HHF
20	106-7943	1	Cable-Control, Choke
21	115-7912	1	Dash ASM
21:2	115-2281	1	Decal-Dash
21:3	115-7746	1	Decal-Danger
21:4	115-2282	1	Decal-Warning, Dash
21:5	106-2353	1	Decal-Powerpoint
21:6	106-2355	1	Decal-Switch, Supervisor
23	117-4948	1	Handle-Grab

● Not serviced separately

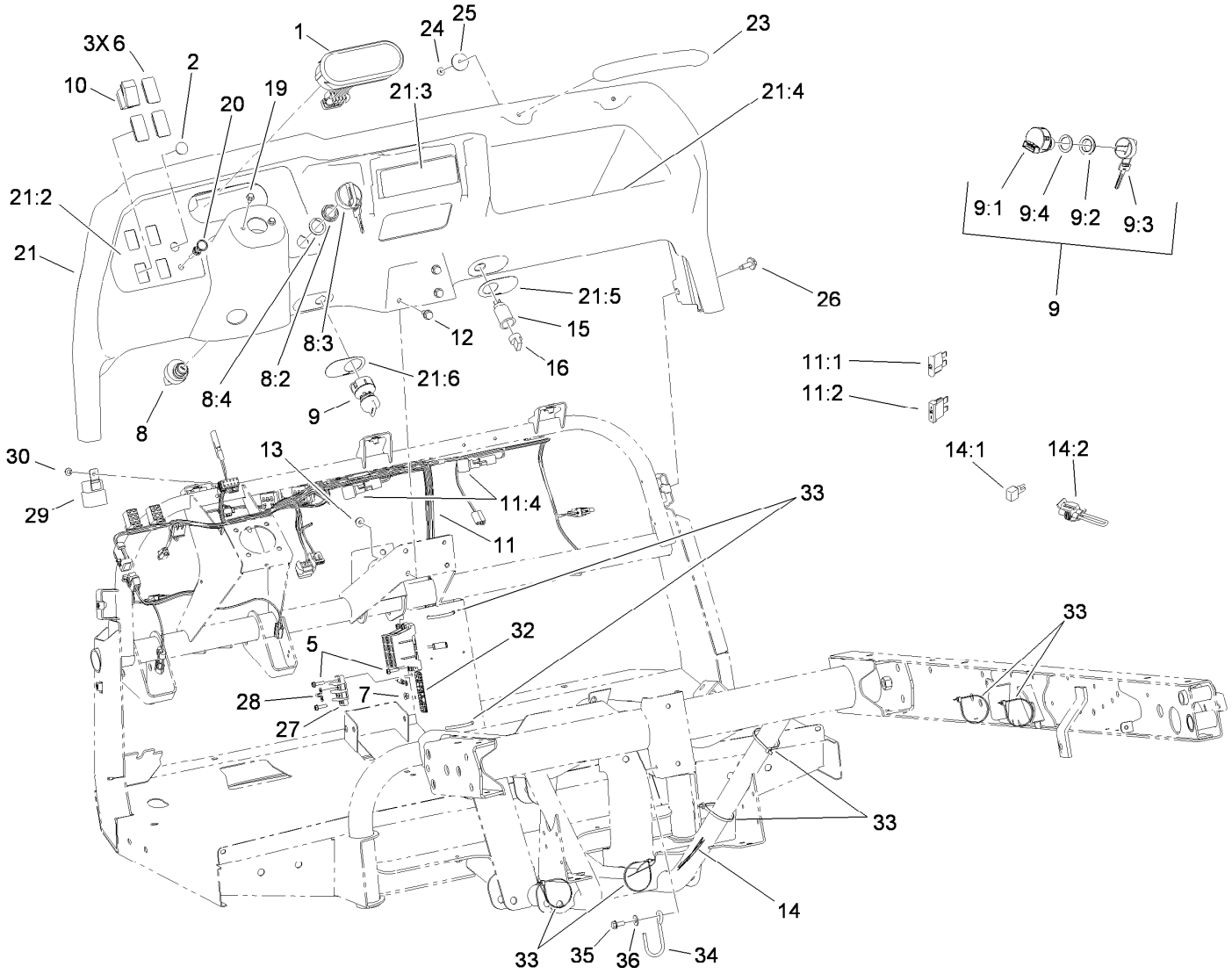

Dash Assembly (continued)

Ref.	Part Number	Qty.	Description
24	104-7201	2	Nut-HF
25	103995	2	Washer
26	114-8418	7	Screw-HWH, Sems
27	42862	1	Block-Terminal, Ground
28	42863	1	Strip-Jumper
29	99-7430	1	Relay

Ref.	Part Number	Qty.	Description
30	32144-10	1	Screw-HWH
32	115-7813	1	Decal-Fuse
33	3290-379	8	Tie-Cable
34	117-4860	1	Guide-Cable
35	32144-11	1	Screw-HWHTF
36	3256-71	1	Washer-Flat

● Not serviced separately

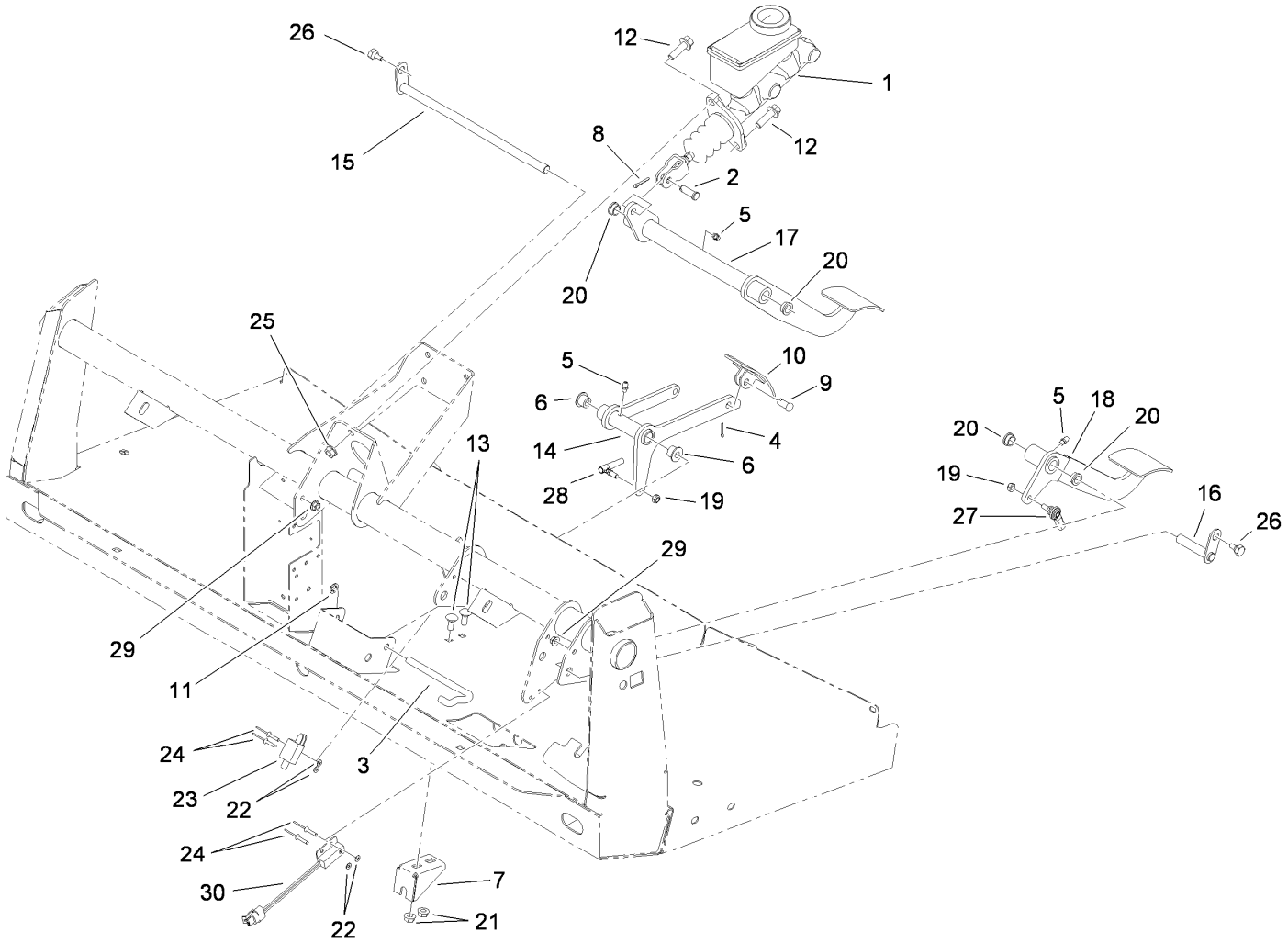

Pedal Assembly

Ref.	Part Number	Qty.	Description
1	104-6782	1	Master Cylinder ASM
2	283-2	1	Pin-Clevis
3	87-2880	1	Shaft-Pedal, Accelerator
4	3272-6	1	Pin-Cotter
5	302-5	3	Fitting-Grease
6	256-259	2	Bushing-Flange
7	106-2421	1	Bracket-Mount, Cable
8	3272-10	1	Pin-Cotter
9	283-85	1	Pin-Clevis
10	93-8969-03	1	Pedal
11	32151-56	1	Ring-Retaining, External
12	3234-11	2	Screw-HHF
13	3230-1	2	Bolt-CARR
14	106-2471-03	1	Arm-Pedal, Accelerator
15	106-2475	1	Shaft-Brake

Ref.	Part Number	Qty.	Description
16	115-2269	1	Pin-Pivot
17	115-2275-03	1	Pedal-Brake
18	115-2271-03	1	Pedal-Clutch
19	3296-13	2	Nut-Lock, NI
20	256-156	4	Bushing-Flange
21	32128-20	2	Nut-HF
22	3256-21	4	Washer-Flat
23	95-1653	1	Switch-Pole, Single
24	3269-25	4	Rivet-Pop
25	3290-357	2	Nut-HHF, Whiz
26	63-3410	2	Screw-Shoulder
27	110-2554	1	Rod End-Spherical
28	18-1720	1	Ball Joint
29	32128-33	2	Nut-HF
30	105-0023	1	Switch-Proximity

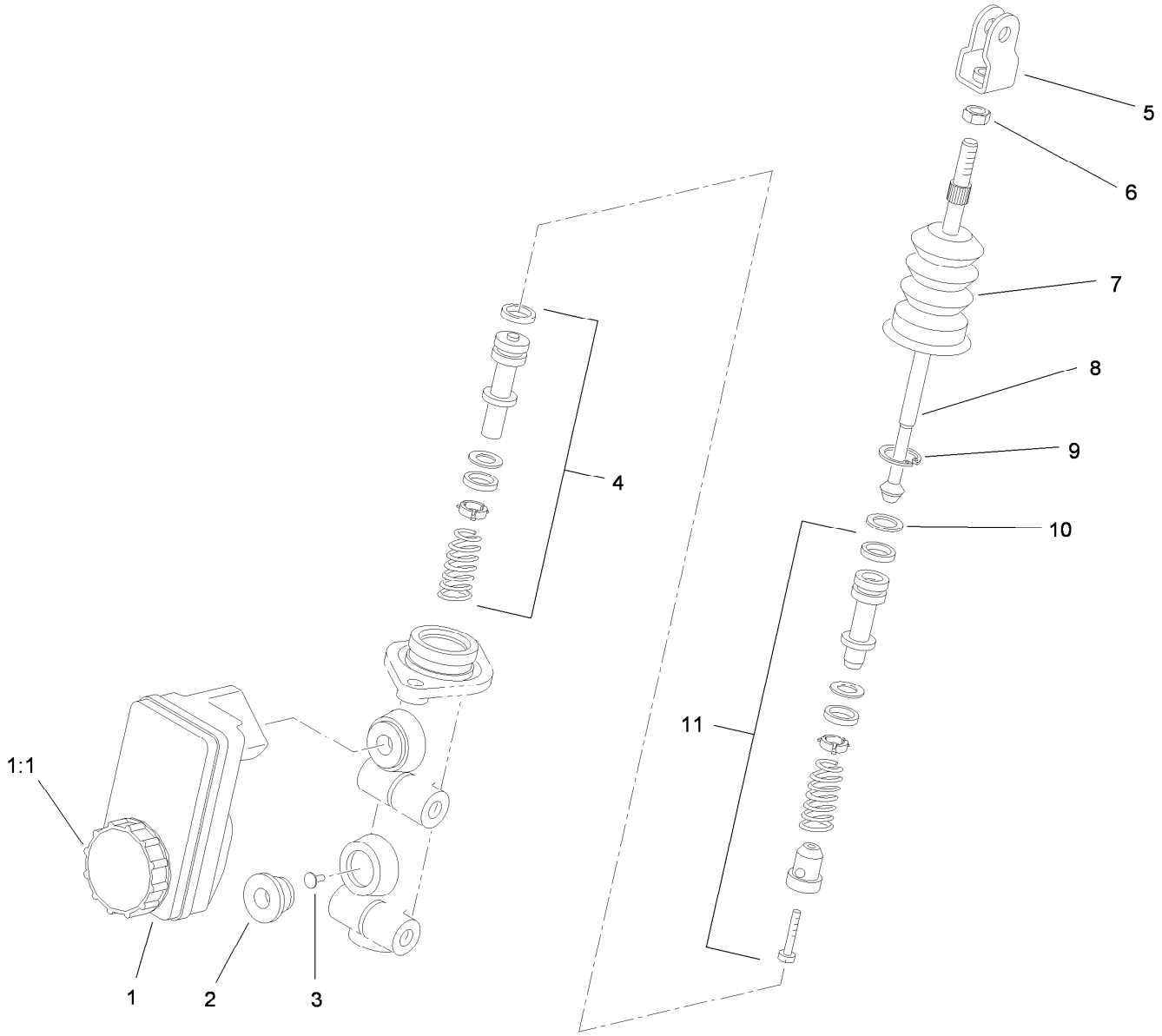

Master Cylinder Assembly No. 104-6782

Ref.	*Part Number*	*Qty.*	*Description*
1	104-6845	1	Reservoir ASM
1:1	92-4112	1	Cap ASM
2	93-8971	2	Seal-Port, Flange
3	92-4103	1	Pin-Stop
4	92-4102	1	Secondary Piston ASM
5	92-4110	1	Clevis
6	21-0360	1	Nut-Hex
7	94-5209	1	Cover-Dust
8	94-5210	1	Rod-Push
9	92-4109	1	Ring-Snap
10	92-4108	1	Retainer-Washer
11	92-4101	1	Primary Piston ASM

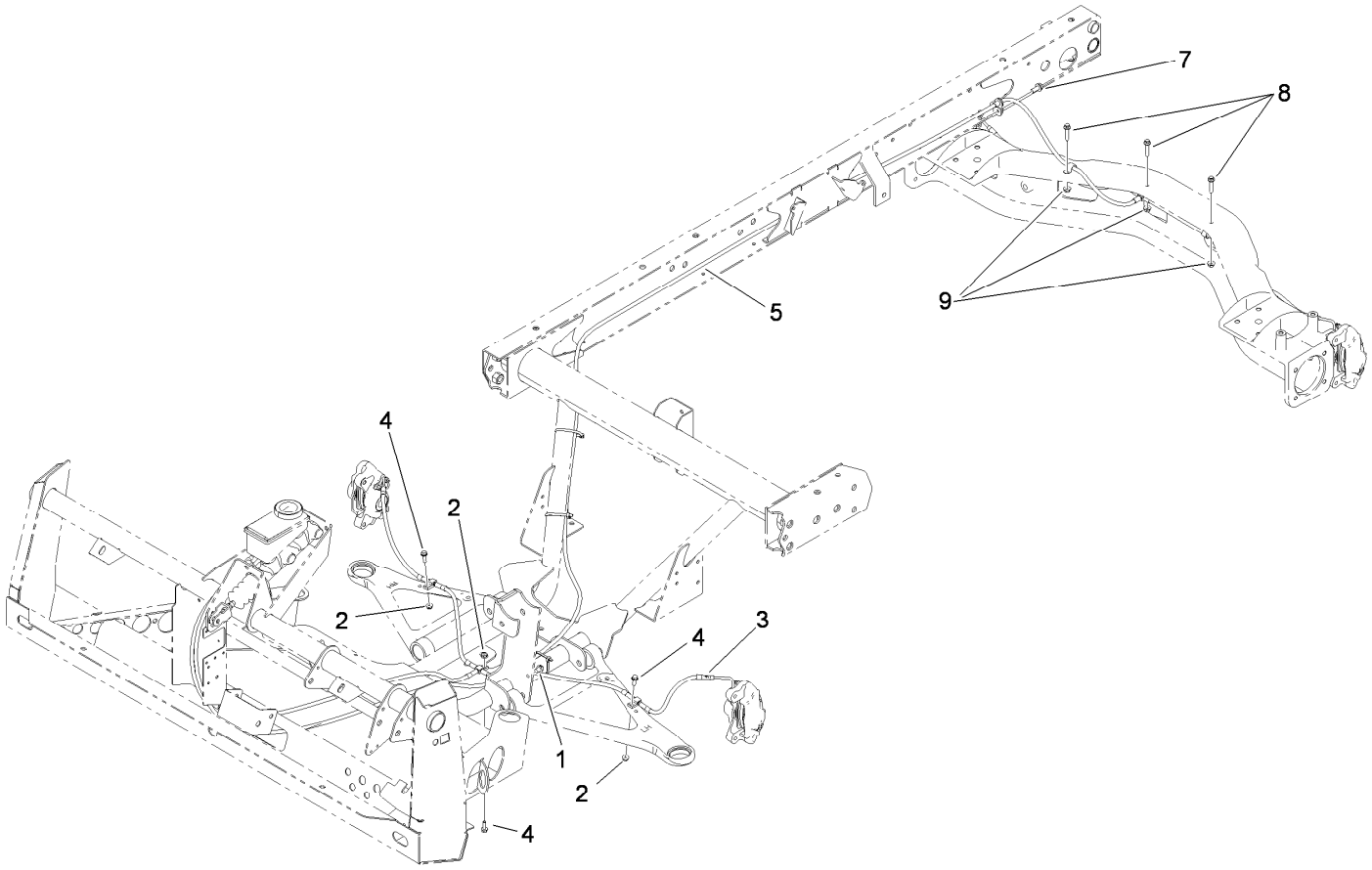

Hydraulic Brake Line Assembly

Ref.	*Part Number*	*Qty.*	*Description*
1	32180-030	2	Clip-Tie
2	104-7201	3	Nut-HF
3	115-2263	1	Line-Brake, Front
4	321-6	3	Screw-HH
5	115-2264	1	Line-Brake, Rear
7	32144-11	1	Screw-HWHTF
8	3234-21	3	Screw-HHF
9	32128-33	3	Nut-HF

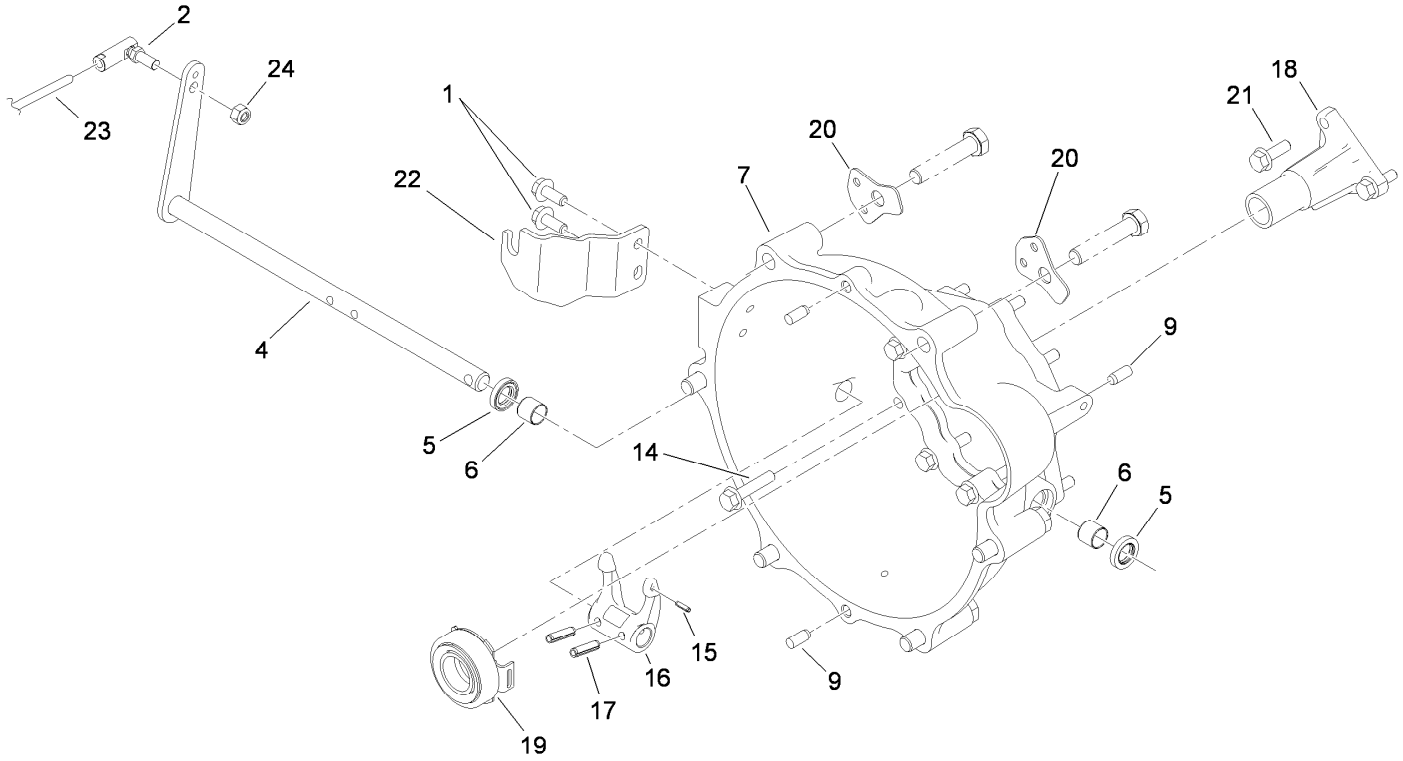

Clutch Linkage Assembly

Ref.	Part Number	Qty.	Description
1	98-7977	2	Screw-HHF
2	2411-33	1	Balljoint-RH (W/Grommet)
4	115-2311	1	Lever-Clutch
5	87-1920	2	Seal-Oil
6	87-3770	2	Bushing-Housing, Bell
7	104-9249	1	Housing-Bell
9	87-1910	4	Pin-Dowel
14	33104-040	9	Screw-HHF
15	32121-7	1	Pin-Roll, Slotted
16	87-5300	1	Fork-Clutch
17	32121-24	2	Pin-Spring
18	115-2259	1	Guide-Release
19	110-2538	1	Bearing-Release, Clutch
20	115-2247	2	Bracket-Harness
21	33104-025	3	Screw-HHF
22	115-2313	1	Bracket-Cable, Clutch
23	115-2284	1	Cable-Clutch
24	3296-4	1	Nut-Lock

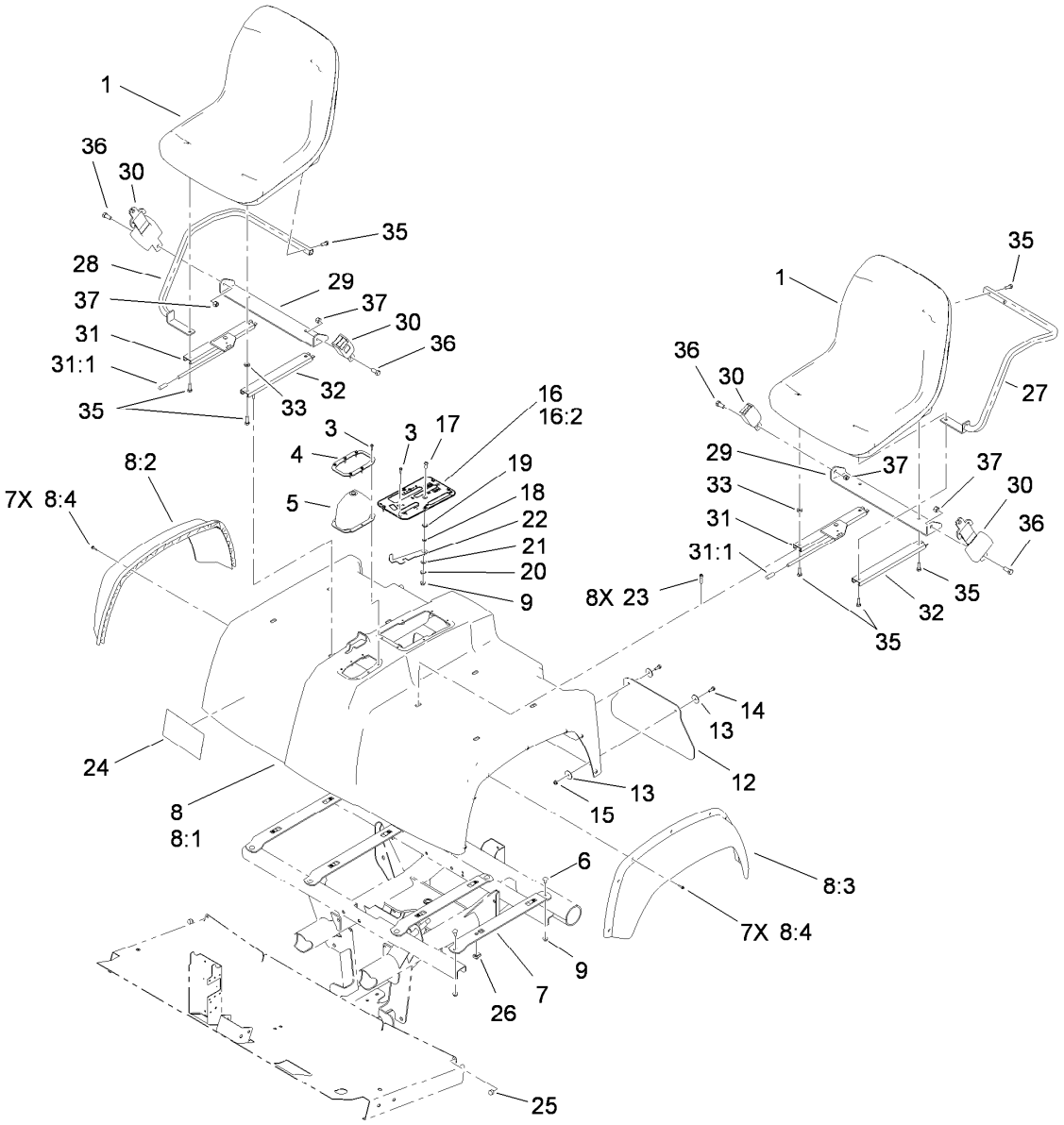

Shroud and Seat Assembly

Ref.	Part Number	Qty.	Description
1	112-2923	2	Seat ASM
3	98-1375	12	Screw-HWH
4	87-3760-03	1	Plate-Boot, Shift
5	87-8620	1	Boot-Shift
6	3230-1	8	Bolt-CARR
7	115-2435-03	4	Bracket-Seat
8		1	Seat Base ASM ●
8:1	114-8406	1	Base-Seat
8:2	114-8407	1	Fender-Front, RH
8:3	114-8408	1	Fender-Front, LH
8:4	117-5036	14	Screw-HWH
9	104-8300	9	Nut-HF, NI
12	106-2378	2	Mudflap
13	3256-55	8	Washer-Flat
14	3234-4	4	Screw-HHF
15	104-7201	4	Nut-HF
16	106-7886	1	Control Plate ASM
16:2	106-2377	1	Decal-Console

Ref.	Part Number	Qty.	Description
17	3274-55	1	Screw-HSBH
18	82-4240	1	Spacer-Bearing
19	94-8196	1	Washer-Nylon
20	3290-221	1	Washer-Spring
21	3256-23	1	Washer-Plain
22	106-7984	1	Lever-Detent
23	3274-22	8	Screw-HSH
24	115-7814	1	Decal-Reference, Quick
25	107-8042	2	Bumper-Rubber
26	115-7721	8	Nut-Clip, U
27	119-0731-03	1	Armrest-LH
28	119-0732-03	1	Armrest-RH
29	119-0727-03	2	Bracket-Belt, Seat
30	110-0413	2	Seatbelt-Retractable
31	119-0654	2	Adjuster-Seat, Locking
31:1	2410-49	1	Cap-Vinyl
32	119-0655	2	Adjuster-Seat, Non Locking
33	104-7658	2	Spacer

● Not serviced separately

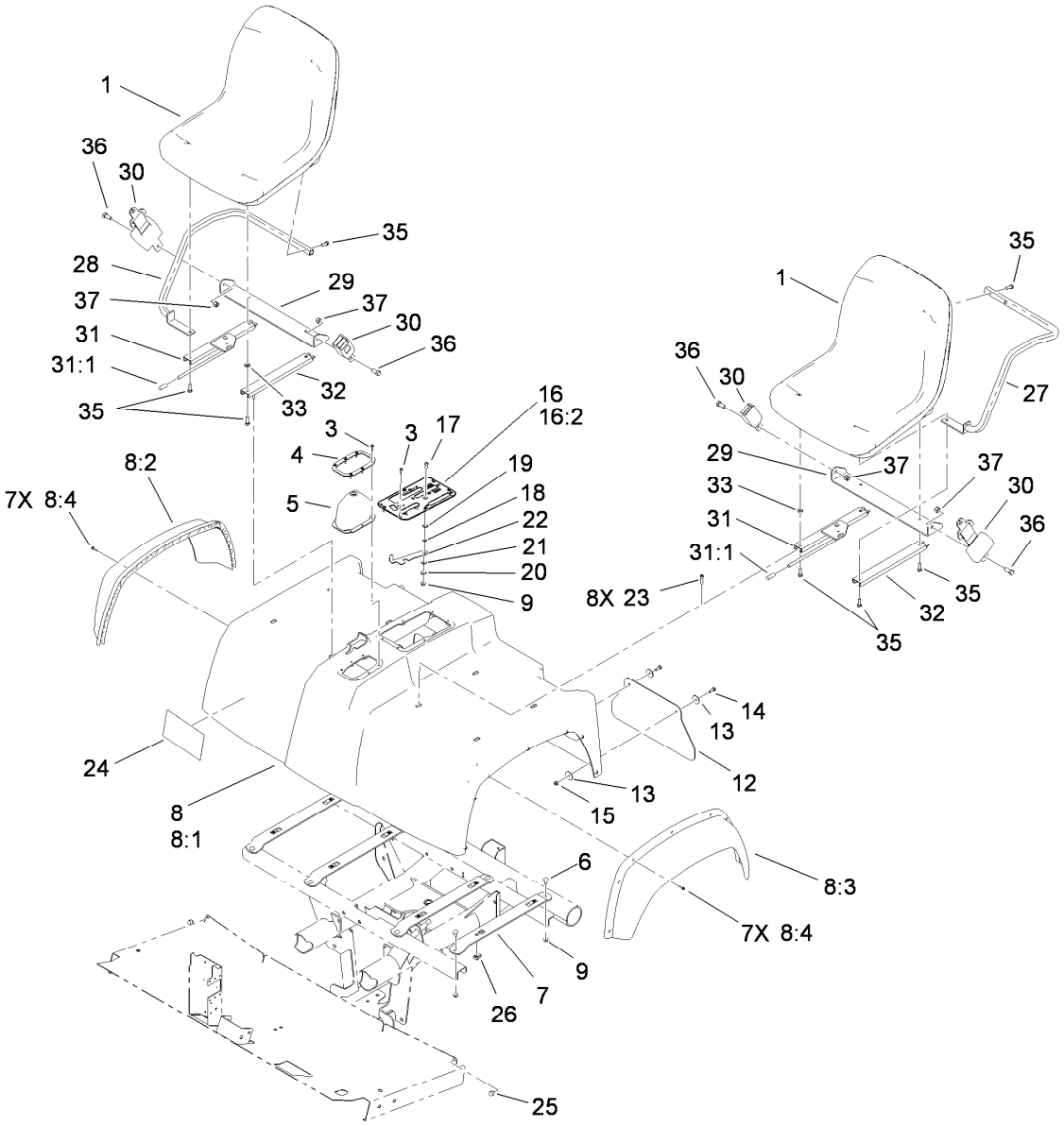

Shroud and Seat Assembly (continued)

Ref.	Part Number	Qty.	Description
35	33114-025	12	Screw-HH

Ref.	Part Number	Qty.	Description
36	3212-4	4	Screw-HH
37	3296-7	4	Nut-Lock

● Not serviced separately

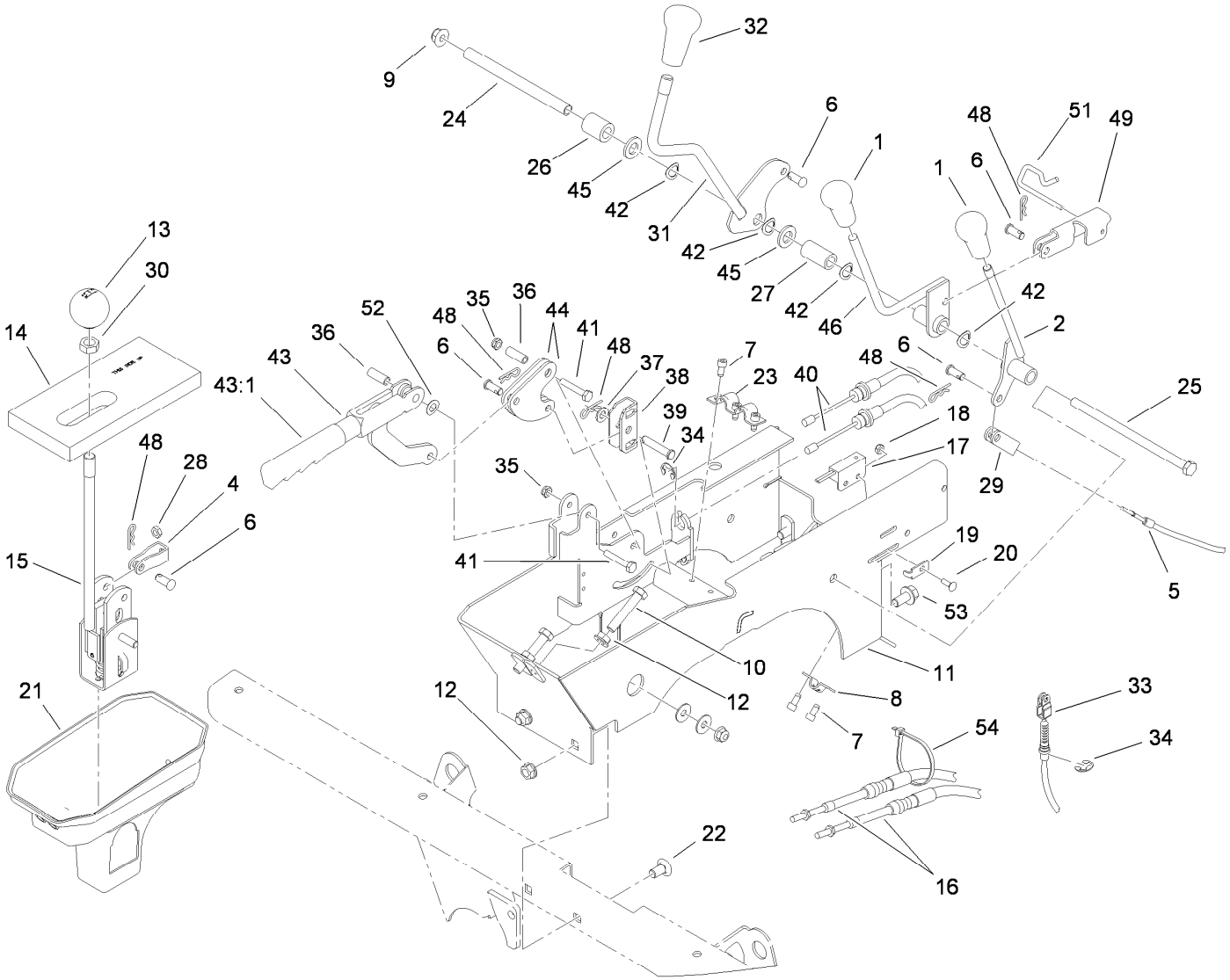

Console Assembly

Ref.	Part Number	Qty.	Description
1	106-7903	2	Knob-Control
2	106-7828	1	Lever
4	87-2310	2	Clevis-Cable
5	115-7812	1	Cable-Hi Low
6	283-62	6	Pin-Clevis
7	65-5220	5	Screw-HSH, Thread Forming
8	87-4340	1	Clamp-Cable
9	104-8301	1	Nut-HF, NI
10	323-10	2	Screw-HH
11	108-6914-03	1	Support-Lever
12	3290-357	4	Nut-HHF, Whiz
13	87-6720	1	Knob-Shift
14	87-6570	1	Seal-Boot, Lower
15	106-7887	1	Shift ASM
16	115-7811	2	Cable-Selector, Gear
17	100-1270	1	Switch-Proximity
18	3296-12	1	Nut-Lock, NI
19	100-4872	1	Plate-Switch, Neutral
20	3229-34	1	Screw-CARR
21	106-2376	1	Boot-Shift, Lower

Ref.	Part Number	Qty.	Description
22	3231-21	2	Screw-CARR
23	87-4960	1	Clamp-Cable
24	106-7833	1	Spacer
25	323-36	1	Screw-HH
26	66-6501	1	Spacer-Wheel
27	106-7835	1	Spacer
28	3220-1	2	Nut-Jam
29	87-7160	1	Clevis-Cable
30	3218-18	1	Nut-Jam
31	112-3008	1	Lever-Lock, Differential
32	106-7952	1	Knob
33	115-2287	1	Cable-Lock, Differential
34	32120-47	3	Ring-Retaining, External
35	3296-56	2	Nut-Lock, NI
36	114402	2	Spacer
37	3256-23	1	Washer-Plain
38	87-3480	1	Bracket-Equalizer, Cable
39	94-3829	1	Pin-Clevis
40	115-2283	2	Cable-Brake, Park
41	321-9	2	Screw-HH
42	3290-221	4	Washer-Spring

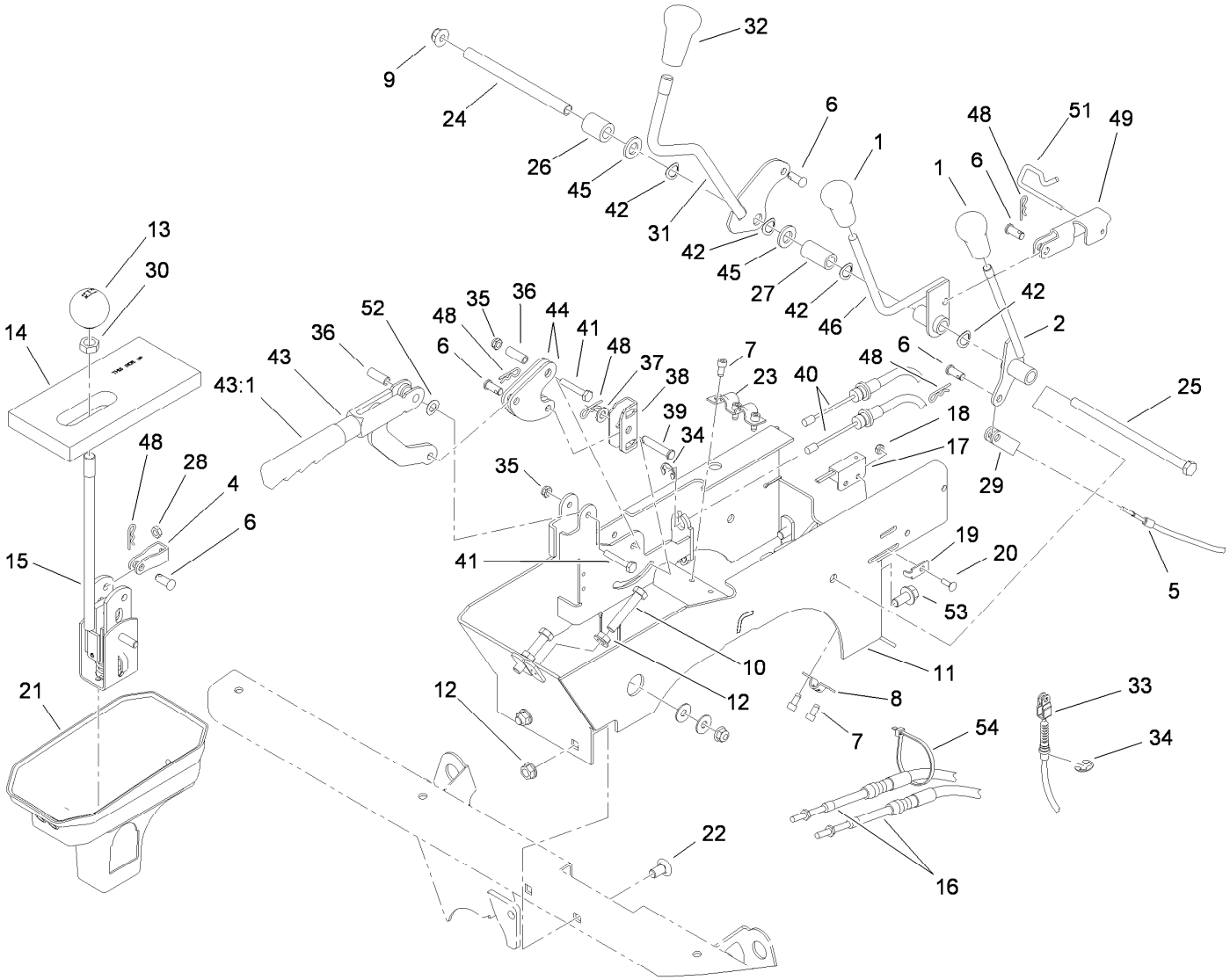

Console Assembly (continued)

Ref.	Part Number	Qty.	Description
43	104-6842	1	Lever-Brake, Park
43:1	106-7972	1	Grip-Handle
44	106-7814	2	Bellcrank
45	33096-00	2	Washer-Flat
46	106-7960	1	Lever-HYD
48	3290-307	7	Pin-Cotter

Ref.	Part Number	Qty.	Description
49	115-2250	1	Link
51	115-2350	1	Pin-Retainer
52	3290-477	1	Washer-Curved
53	3234-12	2	Screw-HHF
54	3290-379	3	Tie-Cable

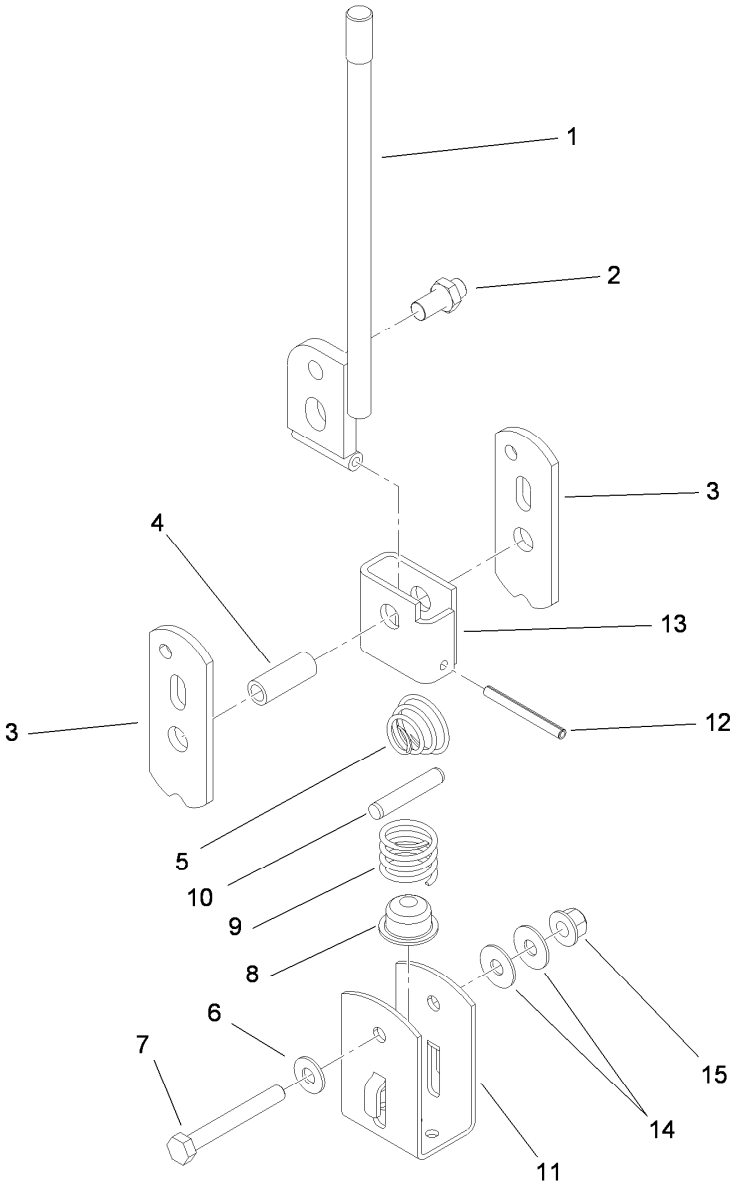

Shift Assembly No. 106-7887

Ref.	Part Number	Qty.	Description
1	87-2040	1	Lever-Shift
2	87-3650	1	Pin-Shift
3	87-3540	2	Link-Shift
4	87-2520	1	Tube-Pivot
5	87-2900	1	Spring-Compression
6	87-8640	1	Washer-Flat
7	322-12	1	Screw-HH
8	87-3530	1	Button-Shifter
9	87-3660	1	Spring-Compression
10	3290-507	1	Pin-Dowel
11	87-3520	1	Clevis
12	32121-48	1	Pin-Spring
13	87-6040	1	Bracket-Shifter
14	3290-456	2	Washer-Belleville
15	104-8300	1	Nut-HF, NI

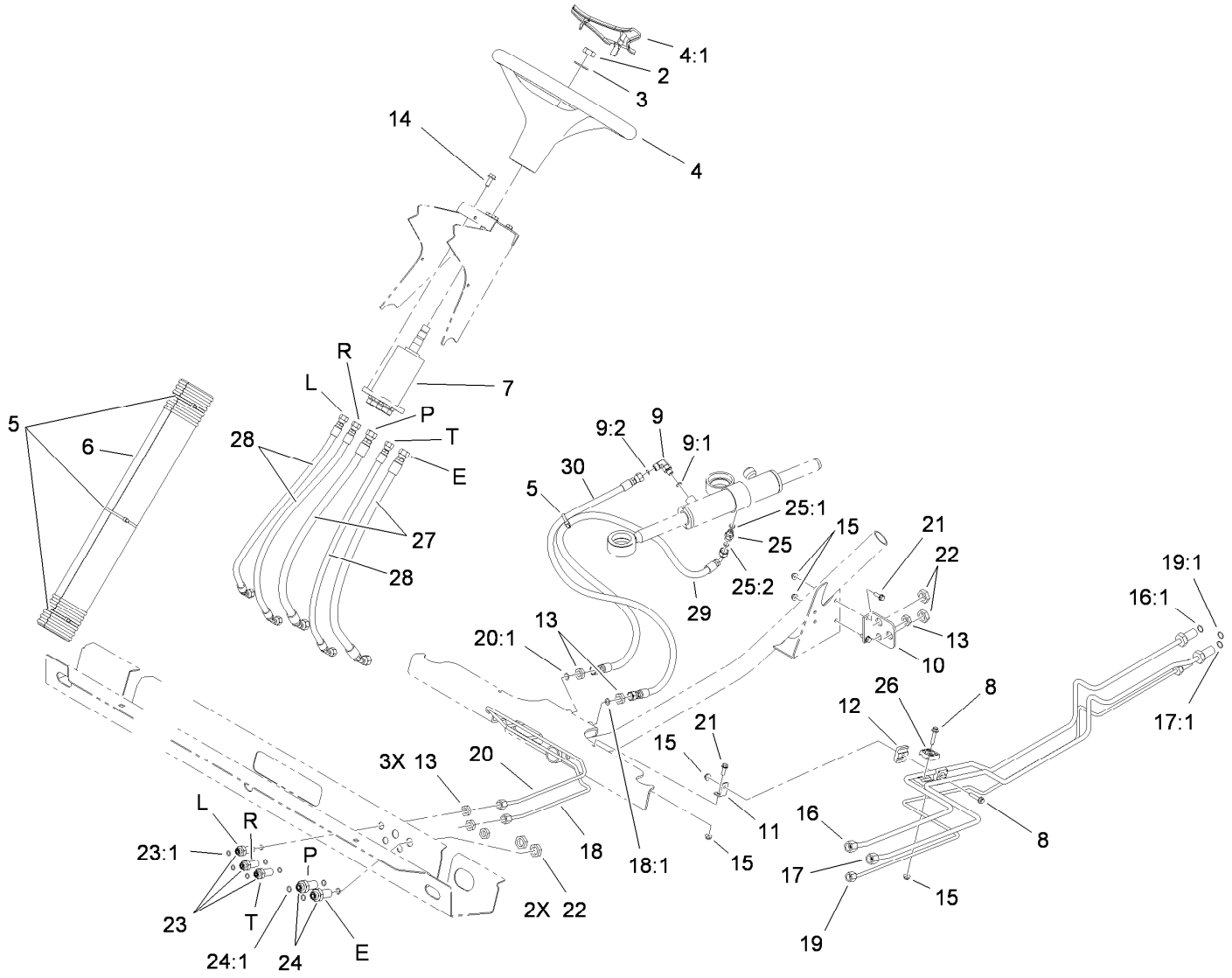

Steering Hydraulic Assembly

Ref.	Part Number	Qty.	Description
2	3296-33	1	Nut-Lock, NI
3	3256-27	1	Washer-Flat
4	98-1471	1	Wheel-Steering
4:1	98-1468	1	Cover-Wheel, Steering
5	3290-379	4	Tie-Cable
6	106-6713	1	Cover-Lines, Steering
7	115-7926	1	Pump-Steering
8	3234-21	2	Screw-HHF
9	340-132	1	Fitting-90 DEG
9:1	237-78	1	O-Ring
9:2	237-21	1	O-Ring
10	106-7801-03	1	Bracket-Line, Steering
11	106-7807	1	Bracket-Line, Steering
12	106-7839	2	Clamp-Tube
13	3219-10	6	Nut-Hex
14	98-7977	4	Screw-HHF
15	104-7201	5	Nut-HF
16	115-7701	1	Tube-HYD
16:1	237-22	1	O-Ring
17	115-7702	1	Tube-HYD
17:1	237-22	1	O-Ring

Ref.	Part Number	Qty.	Description
18	106-7804	1	Tube-HYD
18:1	237-21	1	O-Ring
19	115-7703	1	Tube-HYD
19:1	237-21	1	O-Ring
20	106-7806	1	Tube-HYD
20:1	237-21	1	O-Ring
21	3234-4	3	Screw-HHF
22	340-70	4	Nut-Lock
23	94-1444	3	Union-Bulkhead
23:1	237-21	2	O-Ring
24	340-71	2	Fitting-Straight, Bulkhead
24:1	237-22	2	O-Ring
25	340-92	1	Fitting-Straight
25:1	237-78	1	O-Ring
25:2	237-21	1	O-Ring
26	56-7973	2	Clamp-Tube
27	106-7975	2	Hose-HYD
28	106-7974	3	Hose-HYD
29	117-4861	1	Hose-HYD
30	108-6505	1	Hose ASM

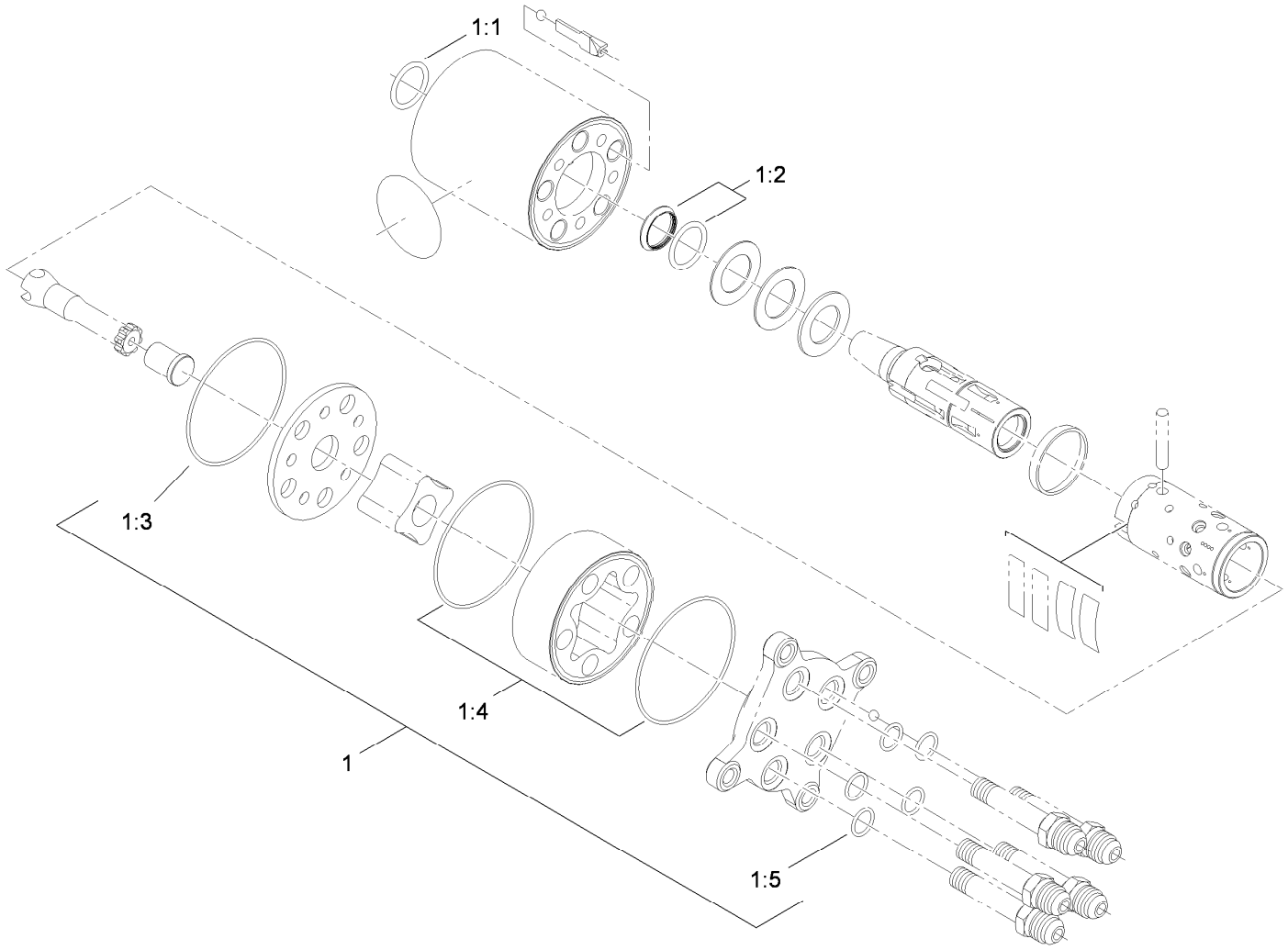

Steering Valve Assembly No. 115-7926

Ref.	*Part Number*	*Qty.*	*Description*
1	106-6716	1	Seal Kit
1:1		1	Ring-Seal, Dust ●
1:2		1	Seal-Shaft ●
1:3		1	Ring-Retaining ●
1:4		2	Ring-Retaining ●
1:5		5	Ring-Retaining ●

● Not serviced separately

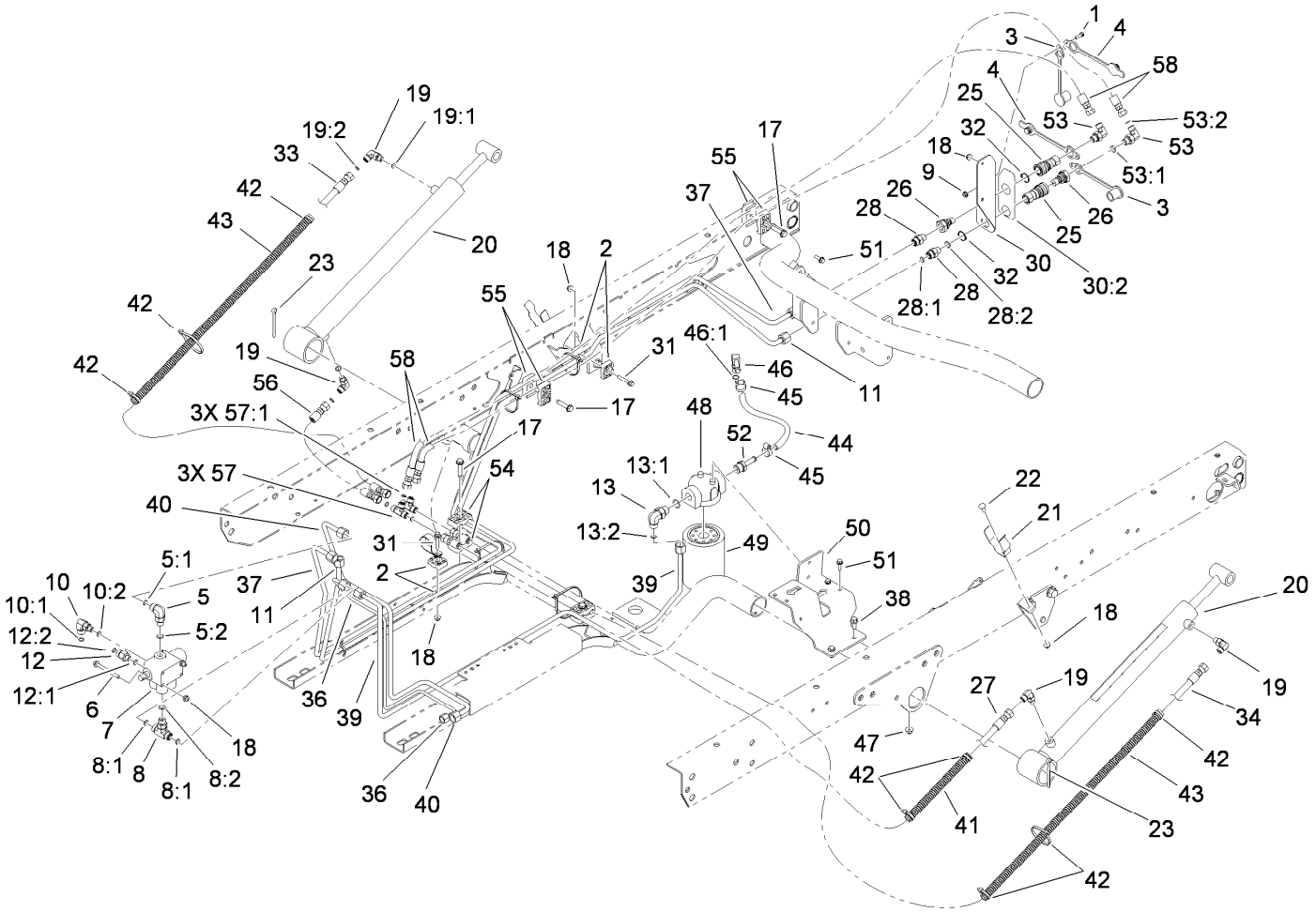

Lift Valve and Hydraulics Assembly

Ref.	Part Number	Qty.	Description
1	32105-13	1	Screw-HWH
2	56-7973	4	Clamp-Tube
3	106-7881	2	Cap-Dust, HYD
4	106-7882	2	Plug-Dust, HYD
5	340-77	1	Fitting-Elbow-90
5:1	237-22	1	O-Ring
5:2	237-42	1	O-Ring
6	114-8410	2	Screw-HHF
7	43-1950	1	HYD Control Valve ASM
8	340-94	1	Adapter
8:1	237-22	2	O-Ring
8:2	237-42	1	O-Ring
9	3290-148	1	Nut-HF
10	340-97	1	Fitting-Elbow 90
10:1	237-22	1	O-Ring
10:2	237-78	1	O-Ring
11	115-2218	1	Tube-HYD
12	340-88	1	Fitting-Str
12:1	237-22	1	O-Ring
12:2	237-78	1	O-Ring
13	340-18	1	Fitting-HYD, 90 DEG

Ref.	Part Number	Qty.	Description
13:1	237-79	1	O-Ring
13:2	237-22	1	O-Ring
17	32144-57	4	Screw
18	104-7201	8	Nut-HF
19	340-132	4	Fitting-90 DEG
19:1	237-78	1	O-Ring
19:2	237-21	1	O-Ring
20	106-7939	2	HYD Cylinder ASM
21	108-3109	2	Retainer-Cylinder
22	3229-1	2	Bolt-CARR
23	3272-37	2	Pin-Cotter
25	106-7968	2	Coupler-Quick, Female
26	106-7969	2	Coupler-Quick, Male
27	115-7711	1	HYD Hose ASM
28	340-2	2	Fitting-Straight
28:1	237-22	1	O-Ring
28:2	237-42	1	O-Ring
30	115-7715	1	Coupler Bracket ASM
30:2	115-7723	1	Decal-Disconnect, Quick
31	94-5781	2	Screw-HHF
32	32151-83	2	Ring-Snap

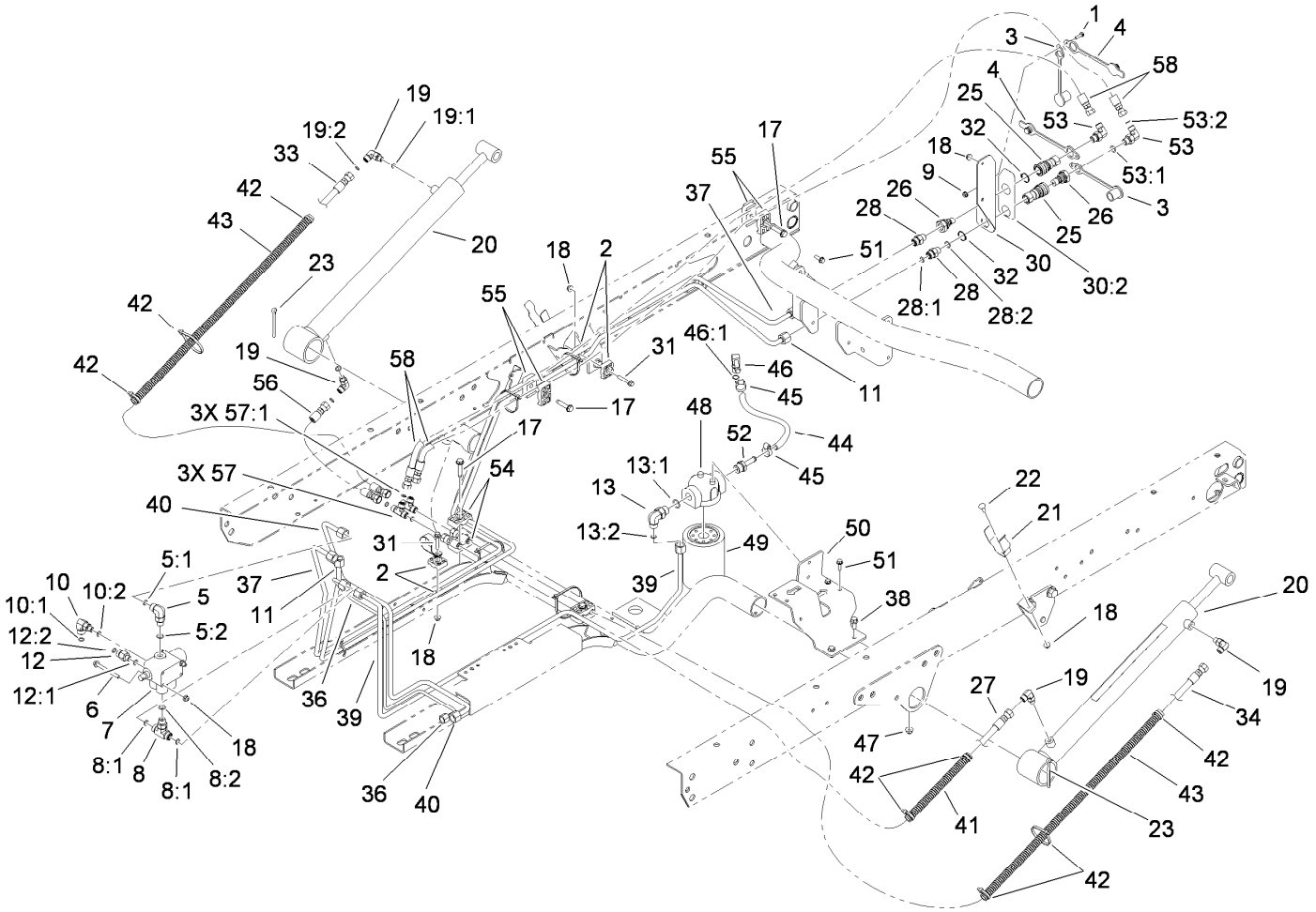

Lift Valve and Hydraulics Assembly (continued)

Ref.	Part Number	Qty.	Description
33	108-6508	1	Hose-HYD
34	104-3716	1	HYD Hose ASM
36	115-2216	1	Tube-HYD
37	115-2217	1	Tube-HYD
38	3234-5	2	Screw-HHF
39	115-2224	1	Tube-HYD
40	115-2223	1	Tube-HYD
41	24-7922	1	Conduit-Convoluted, Split
42	3290-379	8	Tie-Cable
43	24-7923	2	Conduit-Convoluted, Split
44	115-2228	1	HYD Hose ASM
45	2412-36	2	Clamp-Hose
46	100-4887	1	Fitting-Barbed
46:1	237-42	1	O-Ring
47	104-8300	2	Nut-HF, NI

Ref.	Part Number	Qty.	Description
48	87-8780	1	Head-Filter
49	54-0110	1	Filter-Oil, Transmission
50	115-2168-03	1	Bracket-Filter
51	3234-4	4	Screw-HHF
52	115-2231	1	Fitting-Straight
53	340-82	2	Fitting-Elbow 90
53:1	237-42	1	O-Ring
53:2	237-21	1	O-Ring
54	56-7971	2	Clamp-Tube
55	56-7976	6	Clamp-Tube
56	110-0931	1	Hose-HYD
57	340-21	2	Fitting
57:1	237-21	3	O-Ring
58	106-3680	2	Hose-HYD

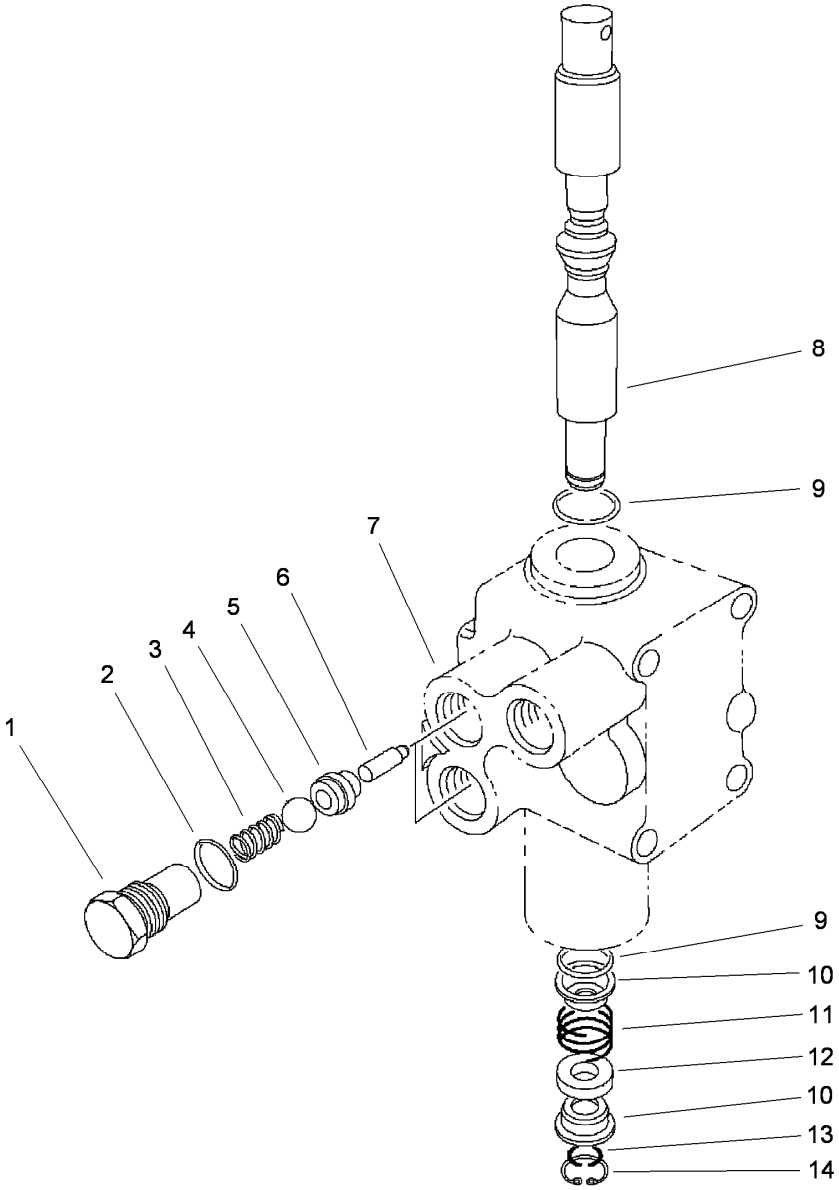

Control Valve Assembly No. 43-1950

Ref.	Part Number	Qty.	Description
1	22-8330	2	Plug
2	237-42	2	O-Ring
3	22-8340	2	Spring
4	22-8350	2	Ball
5	22-8370	2	Seat-Valve
6	22-8360	2	Pin
7		1	Body ●
8	22-8420	1	Spool
9	22-8500	2	O-Ring
10	22-8380	2	Retainer
11	22-8410	1	Spring
12	23-3030	1	Spacer
13	22-8480	1	Ring-Snap
14	22-8490	1	Ring-Snap

● Not serviced separately

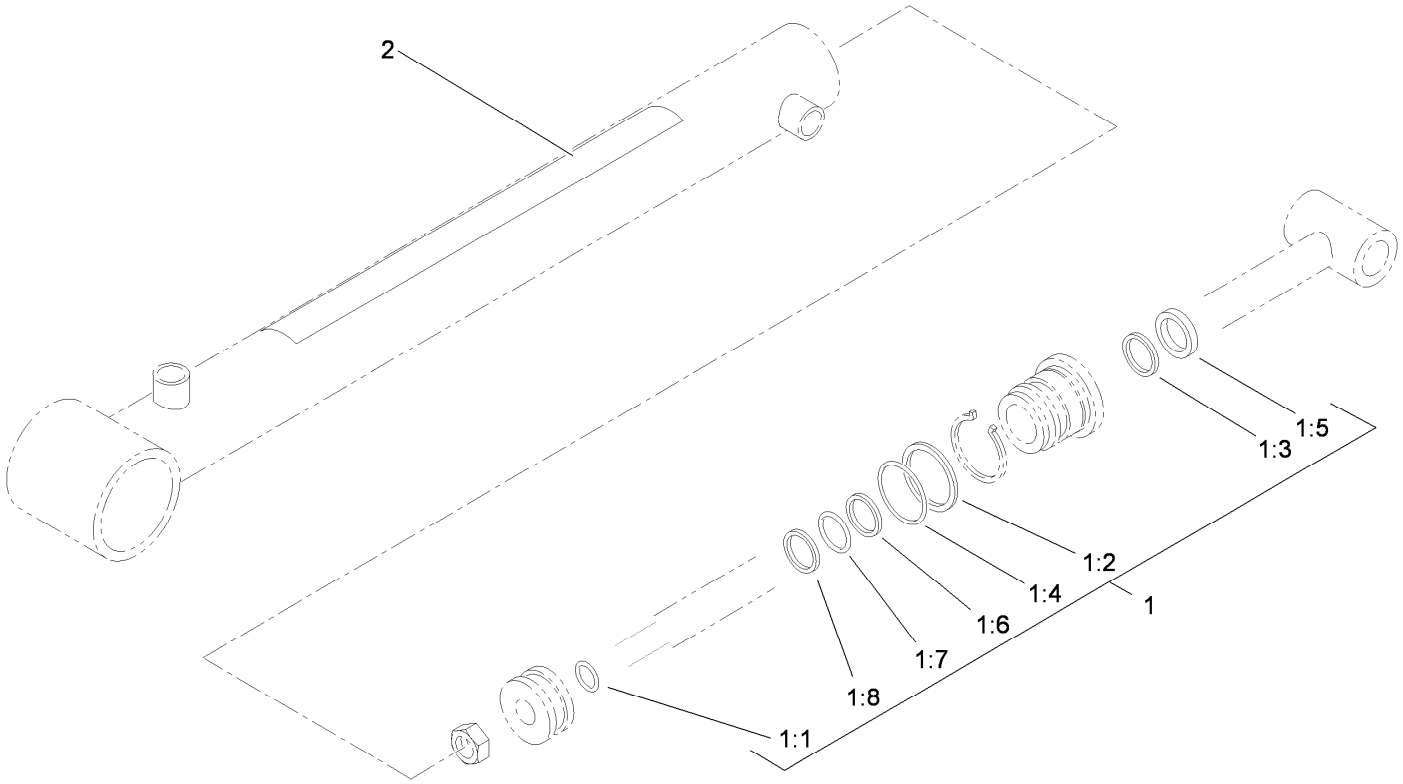

Hydraulic Cylinder Assembly No. 106-7939

Ref.	*Part Number*	*Qty.*	*Description*
1	106-7941	1	Seal Kit
1:1		1	Ring-Retaining ●
1:2		1	Ring-Retaining ●
1:3		1	Seal ●
1:4		1	Back-Up ●
1:5		1	Wiper ●
1:6		1	Seal ●
1:7		1	Ring-Retaining ●
1:8		1	Ring-Wear ●
2	93-9852	1	Decal-Warning

● Not serviced separately

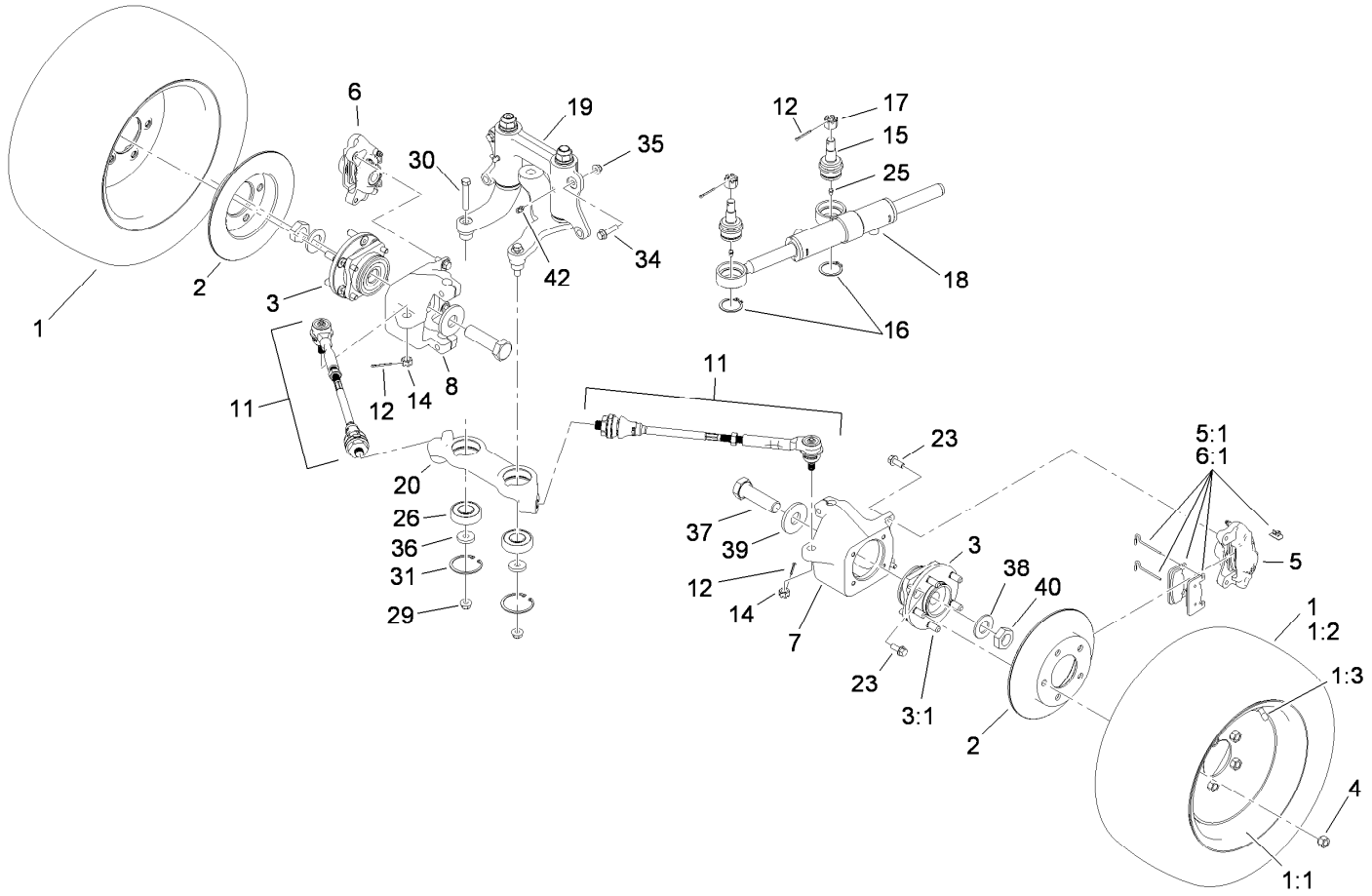

Front Wheel Assembly

Ref.	Part Number	Qty.	Description
1		2	Tire And Wheel ASM ●
1:1	115-2245	1	Wheel
1:2	114-8273	1	Tire
1:3	232-27	1	Stem-Valve
2	114-8351	2	Rotor-Brake
3	112-3214	2	Wheel Hub ASM
3:1	114-8299	5	Stud-Wheel
4	242-50	10	Nut-Lug
5	114-8359	1	Caliper-LH
5:1	115-7846	1	Brake Pad Kit (T108)
6	114-8360	1	Caliper-RH
6:1	115-7846	1	Brake Pad Kit (T108)
7	119-9513	1	Knuckle-LH
8	119-9514	1	Knuckle-RH
11	114-8356	2	Tie Rod ASM
12	3272-12	4	Pin-Cotter
14	32136-3	2	Nut-SHH
15	106-6774	2	Joint-Ball
16	32151-104	2	Ring-Retaining, External

Ref.	Part Number	Qty.	Description
17	32136-14	2	Nut-Hst
18	112-3217	1	HYD Cylinder ASM
19		1	Steering Linkage ASM ●
20	114-8296	1	Link-Center
23	3234-11	12	Screw-HHF
25	302-5	2	Fitting-Grease
26	119-9548	2	Bearing-Ball
29	114-8417	2	Nut-HF, NI
30	324-10	2	Screw-HH
31	32120-22	2	Ring-Snap, Internal
34	114-4681	2	Screw-HHF
35	104-8301	2	Nut-HF, NI
36	112843	2	Washer
37	115-2173	2	Screw-HH
38	3256-62	2	Washer-Flat
39	104-0719	2	Washer-Hardened
40	3296-49	2	Nut-Lock, NI
42	302-60	2	Fitting-Grease

● Not serviced separately

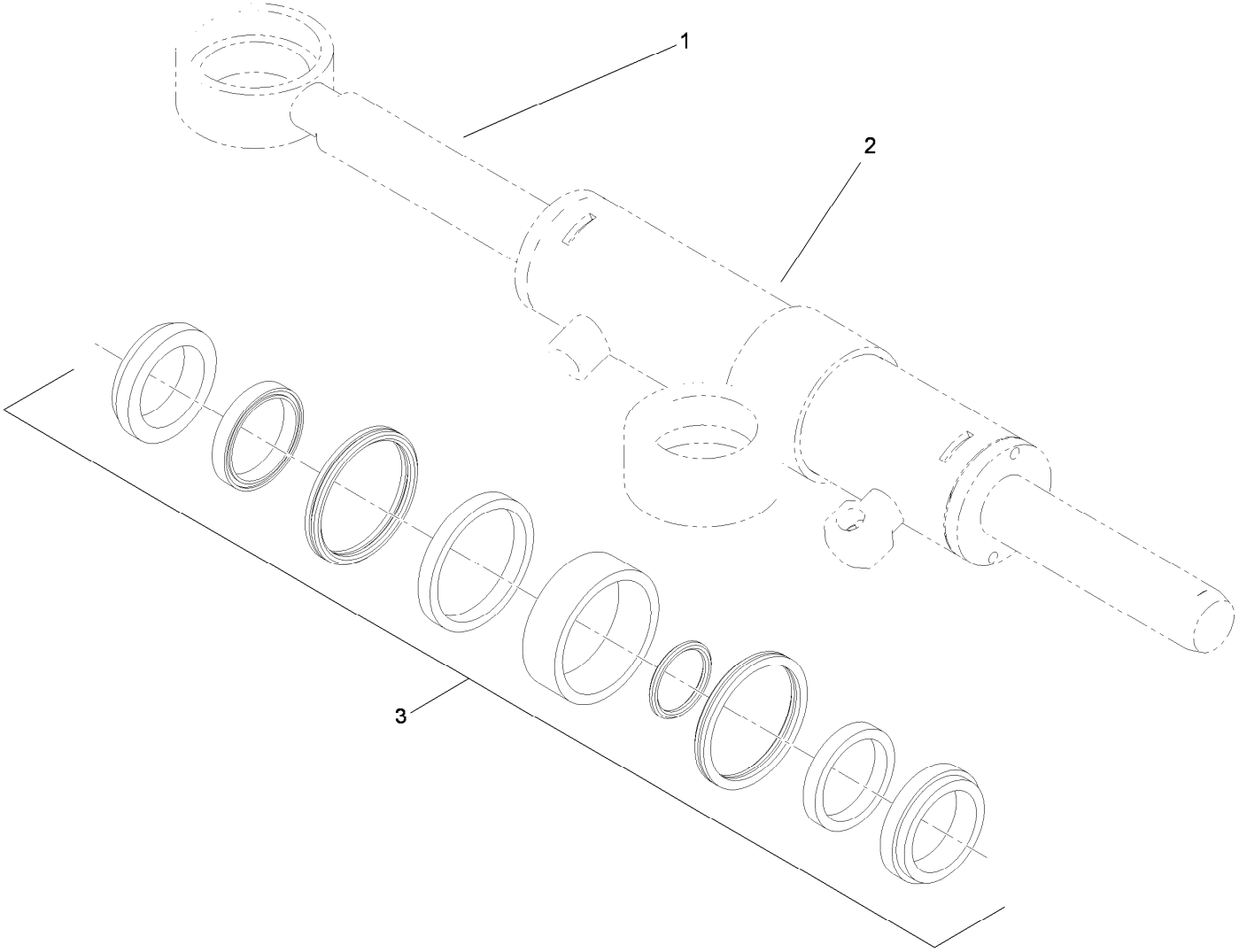

Hydraulic Cylinder Assembly No. 112-3217

Ref.	Part Number	Qty.	Description
1		1	Rod-Cylinder ●
2		1	Body-Cylinder ●
3	115-2160	1	Cylinder Repair Kit

● Not serviced separately

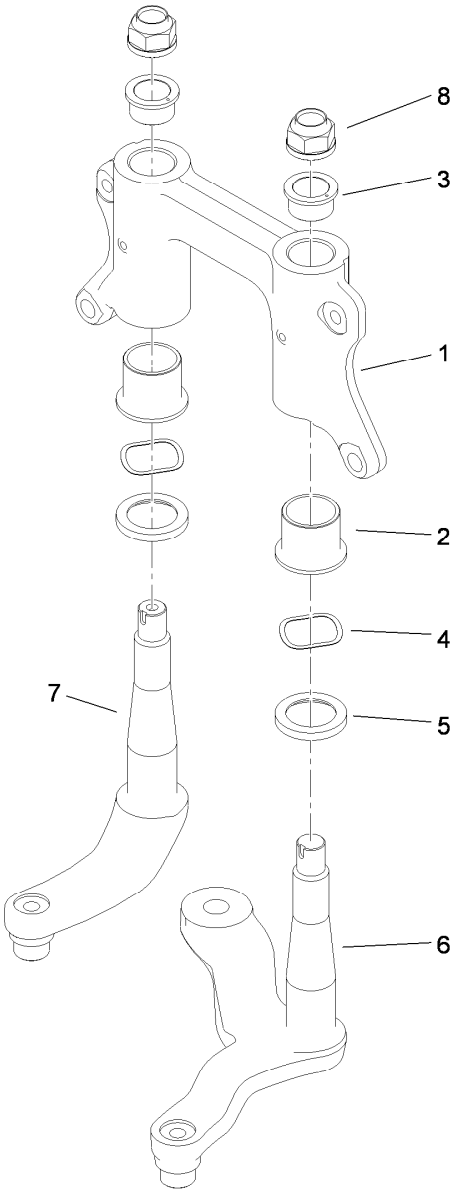

Steering Linkage Assembly

Ref.	*Part Number*	*Qty.*	*Description*
1	114-8389	1	Mount-Pivot
2	69-6470	2	Bushing-Castor
3	112-1626	2	Bushing-Flange
4	93-4632	2	Washer-Wavey
5	86-6560	2	Washer-Thrust
6	114-8256	1	Arm-Pitman
7	114-8298	1	Arm-Idler
8	115-2164	2	Nut-Spindle

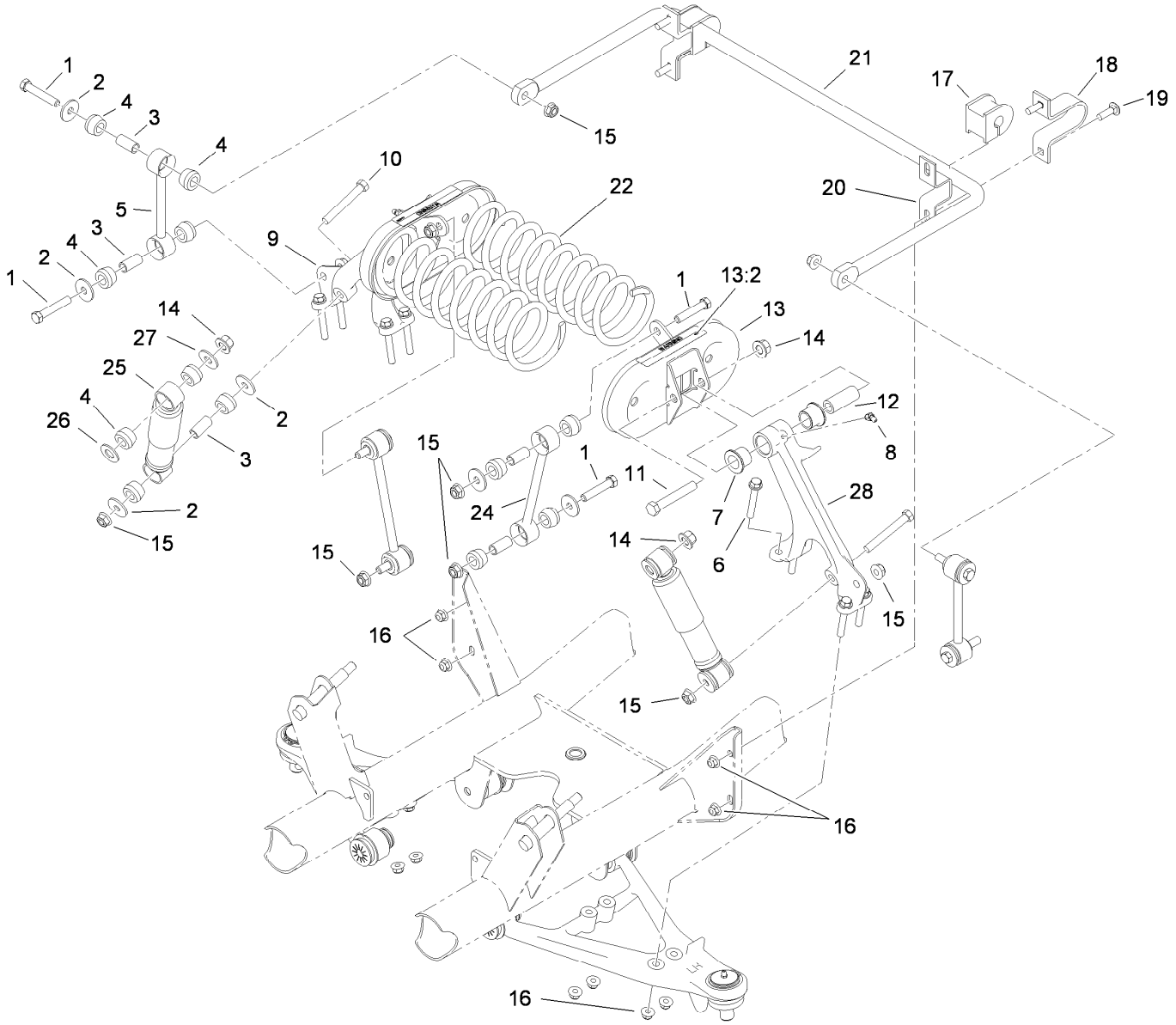

Front Suspension Assembly

Ref.	Part Number	Qty.	Description
1	324-10	8	Screw-HH
2	87-5330	12	Washer
3	87-3600	10	Spacer-Absorber, Shock
4	87-3920	24	Bushing
5	87-3860-03	2	Link-Sway Bar, Anti
6	3234-39	8	Screw-HHF
7	33-3090	4	Bushing
8	302-11	2	Fitting-Lube, 45 DEG
9	87-0150	1	Tower-Control Arm, RH
10	324-13	2	Screw-HH
11	325-13	2	Screw-HH
12	87-2500	2	Sleeve-Spring, Pivot
13	105-7958	2	Spring Cradle ASM
13:2	93-9879	1	Decal-Warning

Ref.	Part Number	Qty.	Description
14	99-5107	4	Nut-Lock
15	114-8417	10	Nut-HF, NI
16	104-8301	12	Nut-HF, NI
17	87-3910	2	Bushing-Rubber
18	87-4010-03	2	Clamp-Bar, Sway
19	3231-25	4	Bolt-CARR
20	87-3890-03	2	Bracket-Bar, Sway
21	87-3850-03	1	Bar-Sway, Anti
22	105-4183-01	2	Spring-Compression
24	106-2302-03	2	Link-Stabilizer
25	87-3110	2	Absorber-Shock
26	3256-27	2	Washer-Flat
27	3256-6	2	Washer-Flat
28	87-0160	1	Tower-Control Arm, LH

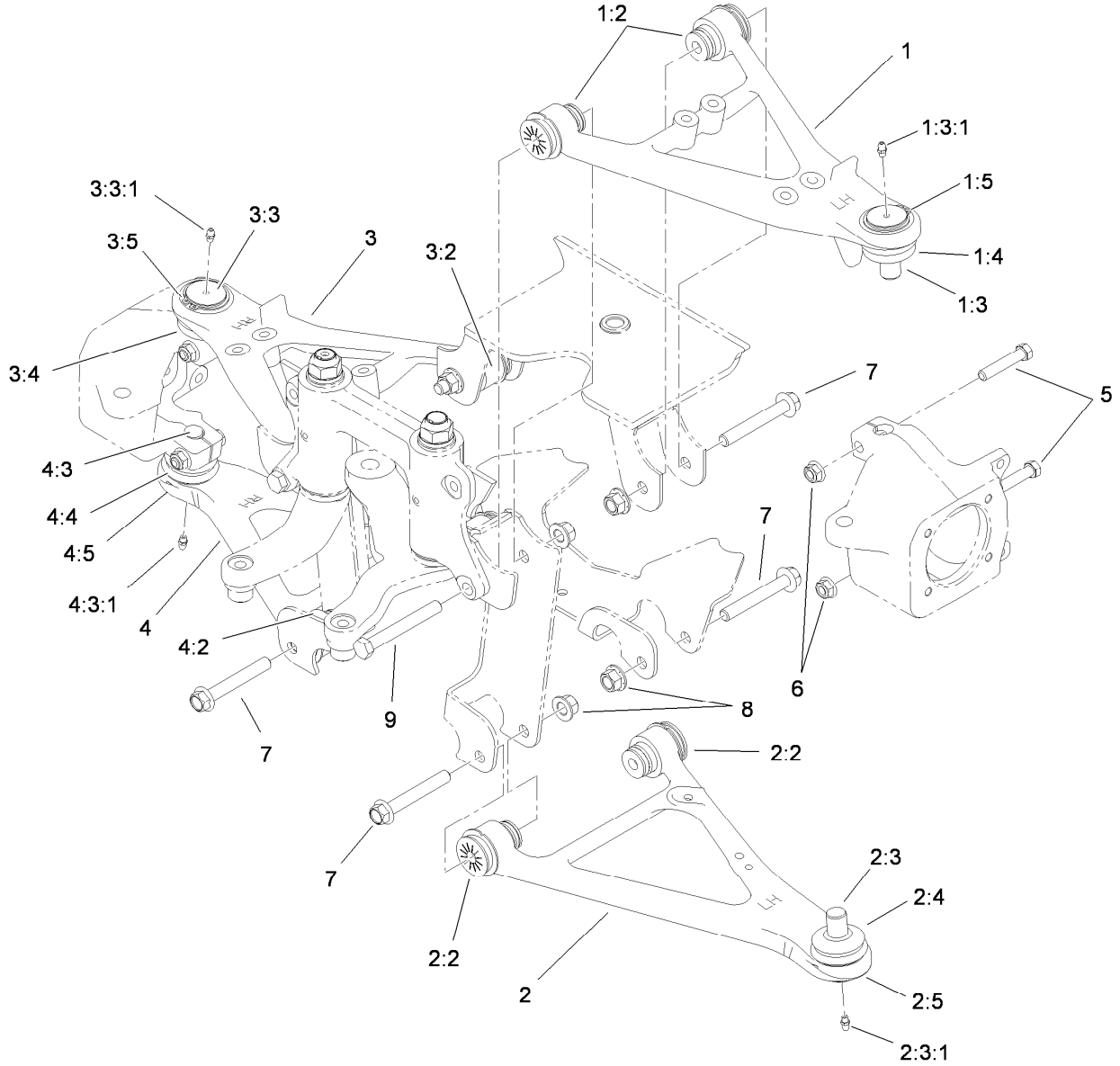

Front Control Arm Assembly

Ref.	Part Number	Qty.	Description
1	115-2404	1	Upper LH Control Arm ASM
1:2	87-1450	2	Bushing-Flange
1:3	115-2165	1	Ball Joint
1:3:1	302-5	1	Fitting-Grease
1:4	87-2420	1	Seal-Joint, Ball
1:5	32151-104	1	Ring-Retaining, External
2	115-2405	1	Lower LH Control Arm ASM
2:2	87-1450	2	Bushing-Flange
2:3	115-2165	1	Ball Joint
2:3:1	302-5	1	Fitting-Grease
2:4	87-2420	1	Seal-Joint, Ball
2:5	32151-104	1	Ring-Retaining, External
3	115-2406	1	Upper RH Control Arm ASM
3:2	87-1450	2	Bushing-Flange
3:3	115-2165	1	Ball Joint

Ref.	Part Number	Qty.	Description
3:3:1	302-5	1	Fitting-Grease
3:4	87-2420	1	Seal-Joint, Ball
3:5	32151-104	1	Ring-Retaining, External
4	115-2407	1	Lower RH Control Arm ASM
4:2	87-1450	2	Bushing-Flange
4:3	115-2165	1	Ball Joint
4:3:1	302-5	1	Fitting-Grease
4:4	87-2420	1	Seal-Joint, Ball
4:5	32151-104	1	Ring-Retaining, External
5	324-10	4	Screw-HH
6	114-8417	4	Nut-HF, NI
7	114-8419	6	Screw-HHF
8	99-5107	8	Nut-Lock
9	325-17	2	Screw-HH

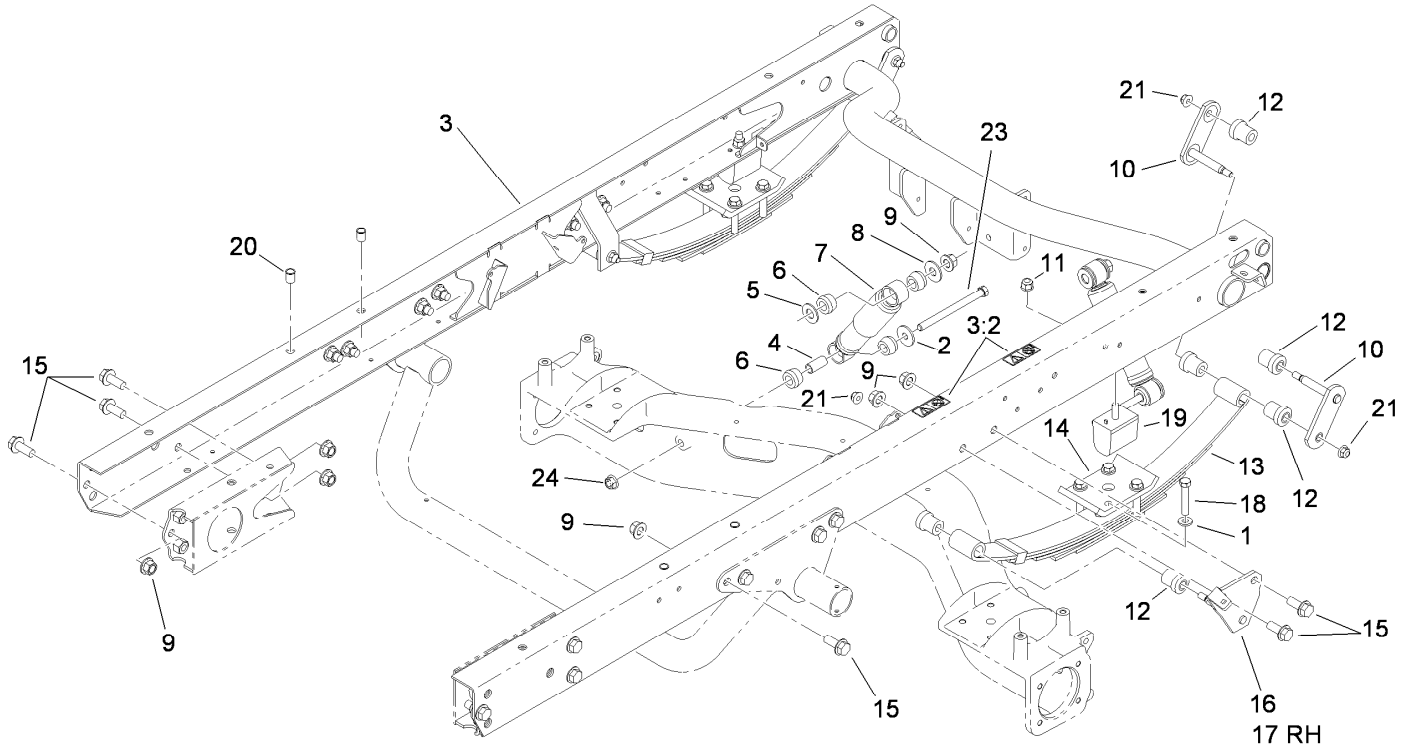

Rear Frame Assembly

Ref.	Part Number	Qty.	Description
1	87-7480	8	Washer
2	87-5330	2	Washer
3	115-7911	1	Rear Frame ASM
3:2	115-2047	2	Decal-Surface, Hot
4	87-3600	2	Spacer-Absorber, Shock
5	3256-27	2	Washer-Flat
6	87-3920	8	Bushing
7	87-3110	2	Absorber-Shock
8	3256-6	2	Washer-Flat
9	99-5107	20	Nut-Lock
10	87-3980	4	Shackle ASM
11	103-9511	2	Nut-Lock, NI

Ref.	Part Number	Qty.	Description
12	87-4760	12	Bushing-Rubber
13	87-1490	2	Spring-Leaf, Rear
14	87-7470-03	2	Plate-Spring, Clamp
15	3234-38	18	Screw-HHF
16	87-3960	1	Mount-Spring, LH
17	87-3940	1	Mount-Spring, RH
18	115-2398	8	Bolt-HH
19	87-3470	2	Bumper
20	32148-9	4	Insert-Nut
21	104-8301	6	Nut-HF, NI
23	114-8424	2	Screw-HH
24	114-8417	2	Nut-HF, NI

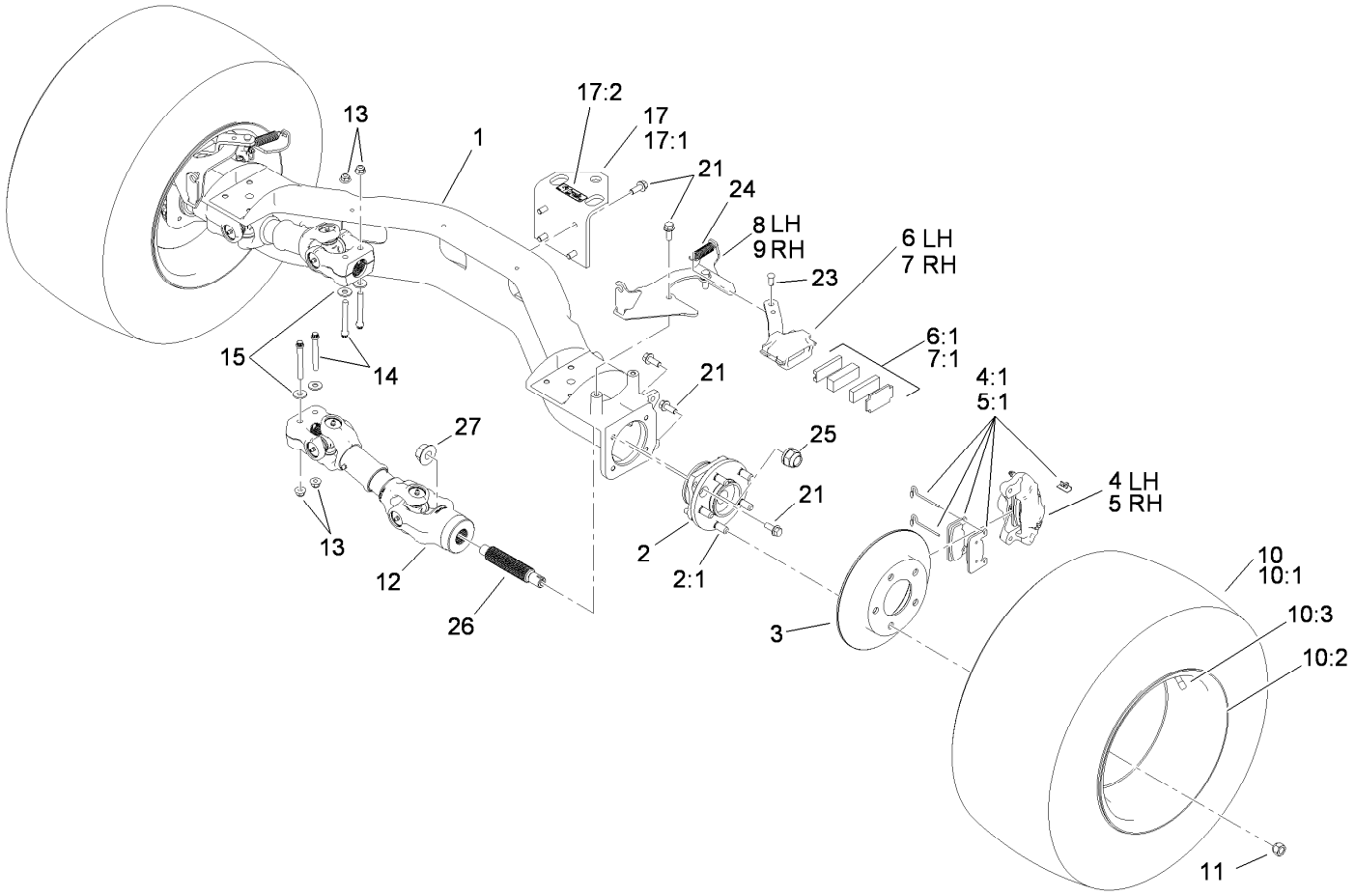

Rear Axle Assembly

Ref.	Part Number	Qty.	Description
1	119-9515	1	Axle-Rear
2	112-3214	2	Wheel Hub ASM
2:1	114-8299	5	Stud-Wheel
3	114-8351	2	Rotor-Brake
4	114-8359	1	Caliper-LH
4:1	115-7846	1	Brake Pad Kit (T108)
5	114-8360	1	Caliper-RH
5:1	115-7846	1	Brake Pad Kit (T108)
6	114-8365	1	Caliper-Mechanical, LH
6:1	115-7847	1	Parking Brake Pad Kit
7	114-8366	1	Caliper-Mechanical, RH
7:1	115-7847	1	Parking Brake Pad Kit
8	115-2362-03	1	Bracket-Caliper, LH
9	115-2359-03	1	Bracket-Caliper, RH
10		2	Tire And Wheel ASM ●
10:1	106-7868	1	Tire

Ref.	Part Number	Qty.	Description
10:2	114-8259	1	Wheel
10:3	232-27	1	Stem-Valve
11	242-50	10	Nut-Lug
12	114-8367	2	Driveshaft ASM
13	104-8301	4	Nut-HF, NI
14	98-2939	4	Screw-Cap
15	80-6990	4	Washer-Hardened
17	115-7742	1	Hitch ASM
17:1	92-5951-03	1	Angle-Hitch
17:2	115-7740	1	Decal-Load, Towing
21	3234-11	20	Screw-HHF
23	283-85	2	Pin-Clevis
24	104-6415	2	Spring-Return, Pedal
25	115-2164	2	Nut-Spindle
26	115-7771	2	Shaft, Splined
27	104-0753	2	Nut-Flange

● Not serviced separately

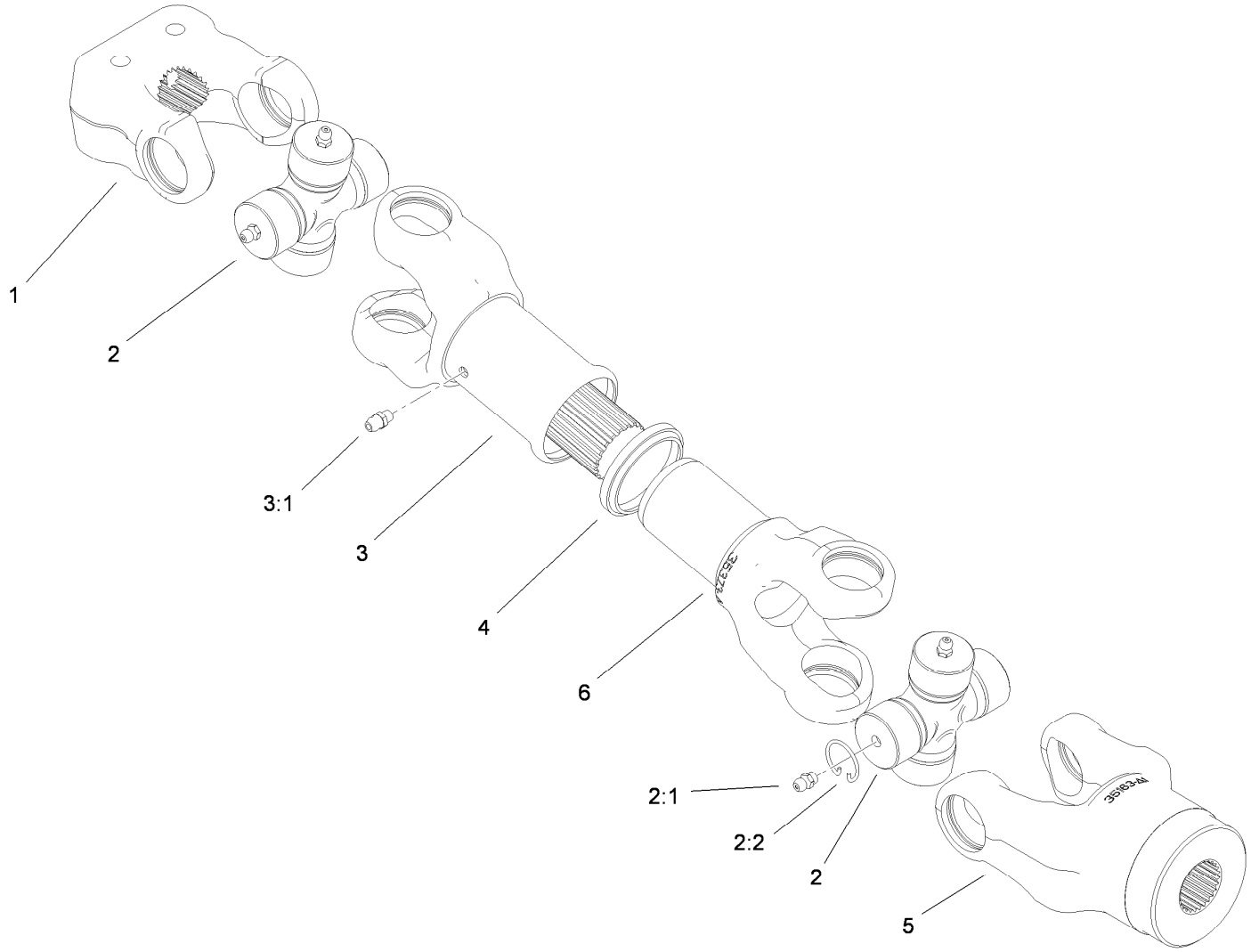

Driveshaft Assembly No. 114-8367

Ref.	Part Number	Qty.	Description
1	98-2940	1	Yoke
2	92-4187	2	Cross And Bearing Kit
2:1	302-58	4	Fitting-Straight
2:2	92-4188	4	Ring-Snap
3	92-4179	1	Yoke-Tube, Shaft And Seal
3:1	302-5	1	Fitting-Grease
4	92-4180	1	Seal
5	115-2351	1	Yoke
6	92-4182	1	Yoke-Telescoping

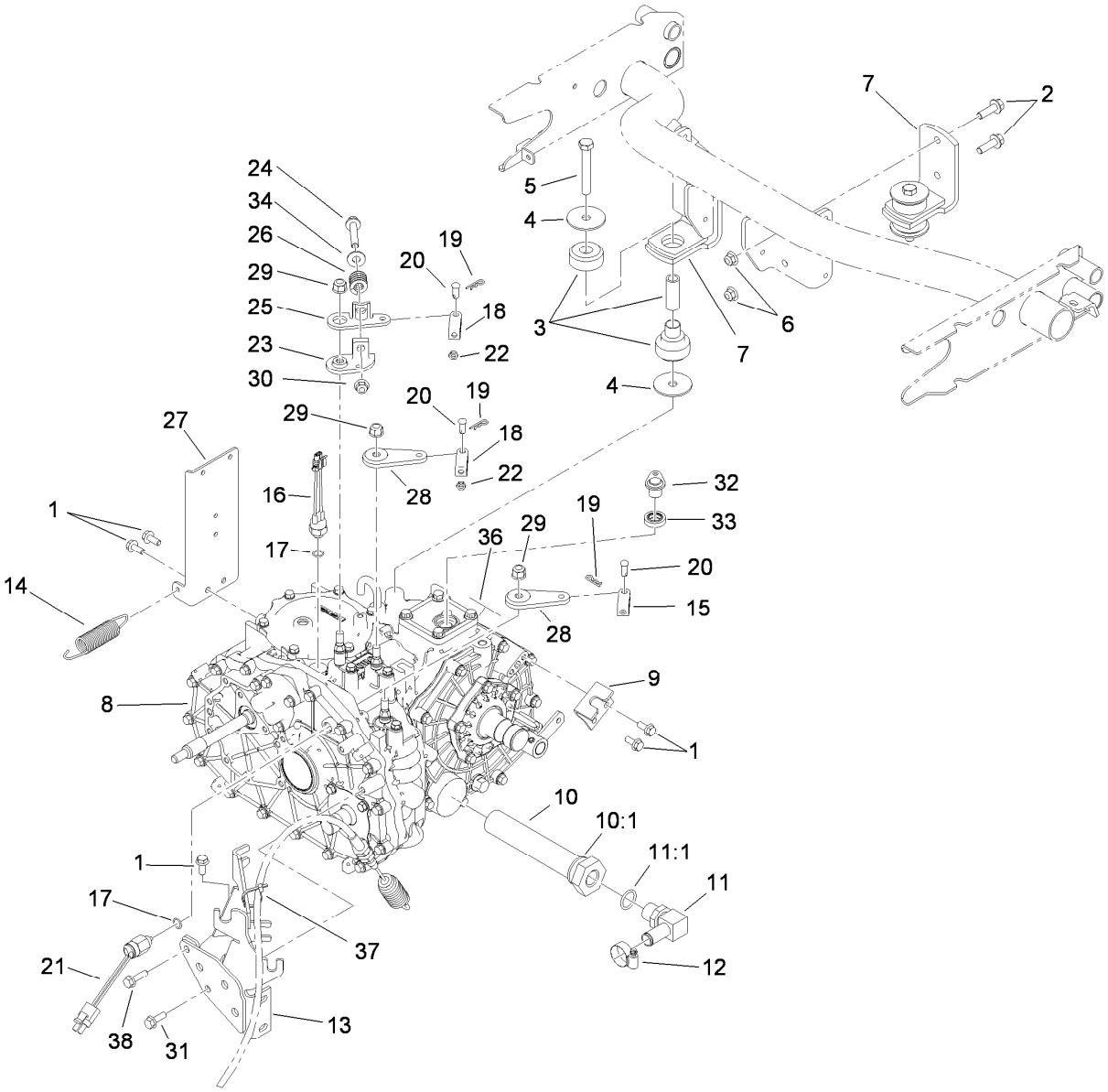

Transaxle Assembly

Ref.	Part Number	Qty.	Description
1	98-7977	5	Screw-HHF
2	3234-24	4	Screw-HHF
3	106-7865	2	Mount-Engine
4	87-5100	4	Washer-Snubbing
5	33116-080	2	Screw-HH
6	104-8301	4	Nut-HF, NI
7	87-5800-03	2	Mount-Transaxle
8	115-7783	1	2 Wheel Drive Transaxle ASM
9	87-4470	1	Bracket-Lock, Differential
10	87-3990	1	Strainer-Transaxle
10:1	237-123	1	O-Ring
11	353-987	1	Fitting-HYD, 90 DEG (Barbed)
11:1	237-81	1	O-Ring
12	2412-129	1	Clamp-Hose
13	105-4207-03	1	Mount-Cable
14	68-9950	1	Spring-Traction
15	87-7160	1	Clevis-Cable
16	72-4310	1	Switch-Ball
17	237-30	2	O-Ring

Ref.	Part Number	Qty.	Description
18	87-2310	2	Clevis-Cable
19	3290-307	3	Pin-Cotter
20	283-62	3	Pin-Clevis
21	87-6710	1	Switch-Transmission
22	3220-1	2	Nut-Jam
23	87-7970	1	Arm-Shift
24	66-9302	1	Screw-HHF, Whiz
25	87-8250	1	Plate-Arm, Shift
26	87-6910	1	Spring-Compression
27	115-2240-03	1	Bracket-Fuel
28	87-7960	2	Lever-Shift
29	103-9511	3	Nut-Lock, NI
30	3290-357	1	Nut-HHF, Whiz
31	33104-025	1	Screw-HHF
32	115-7774	1	Plug ASM
33	92-3735	1	Seal-Oil, Sensor
34	3256-4	1	Washer-Flat
36	115-7741	1	Decal-Oil, Transmission
37	3290-379	1	Tie-Cable
38	33104-030	1	Screw-HHF

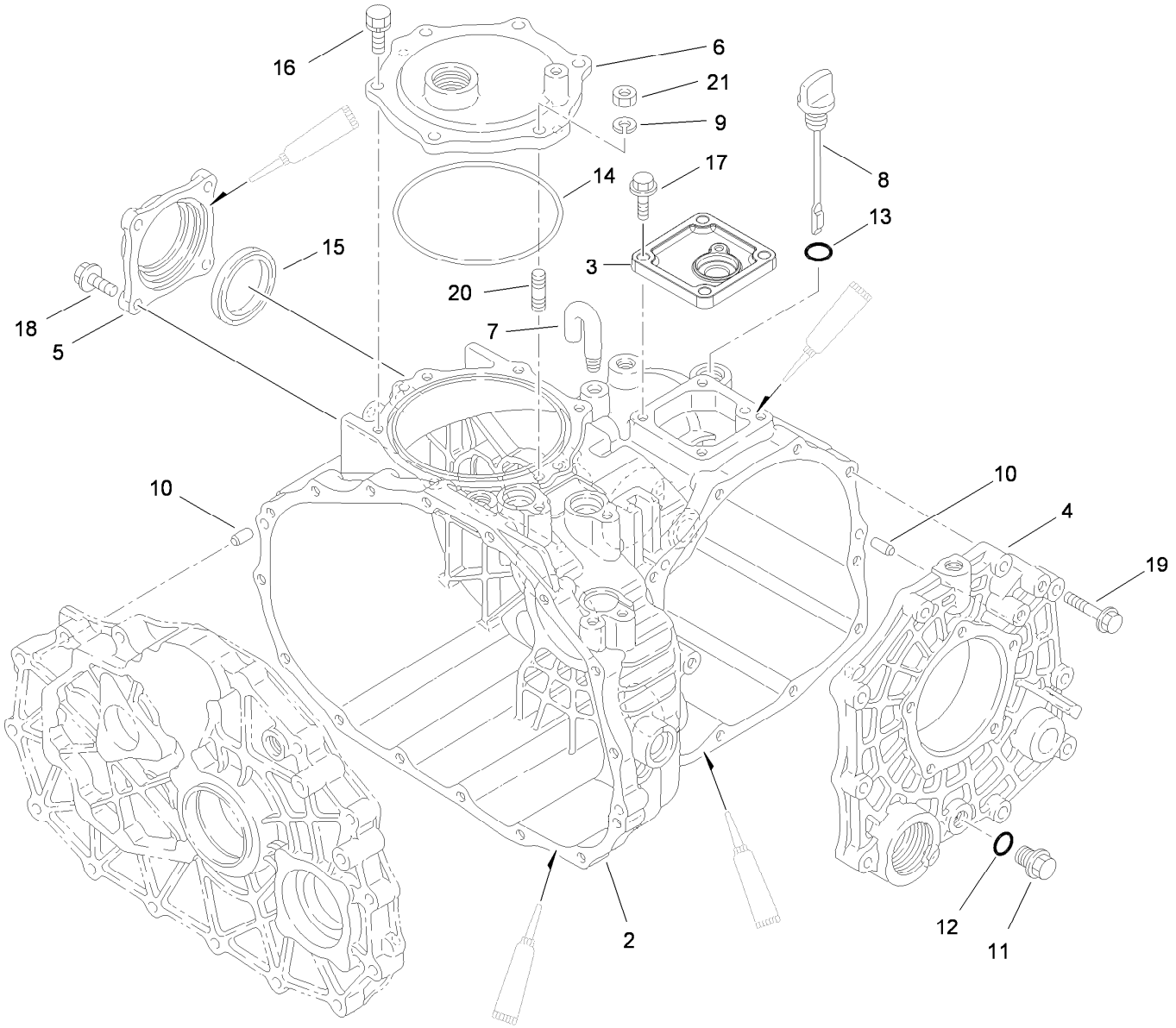

Case Assembly
Transaxle Assembly No. 115-7783

Ref.	Part Number	Qty.	Description
2	92-0651	1	Case-Transmission
3	92-0810	1	Cover-Upper, Sensor
4	92-0653	1	Cover-Side
5	92-0655	1	Cover-Seal, Axle
6	92-0656	1	Cover-Upper, PTO
7	92-0743	1	Breather-Air
8	92-0662	1	Cap-Oil
9	92-0762	1	Washer-Spring
10	92-0765	4	Pin-Parallel
11	92-0773	1	Plug-Drain

Ref.	Part Number	Qty.	Description
12	92-0787	1	O-Ring
13	92-0788	1	O-Ring
14	92-0790	1	O-Ring
15	92-0793	1	Seal-Oil
16	92-0796	5	Bolt
17	33104-025	4	Screw-HHF
18	33104-025	4	Screw-HHF
19	33104-040	10	Screw-HHF
20	92-0805	1	Bolt 8X20
21	68-9400	1	Nut-Flange

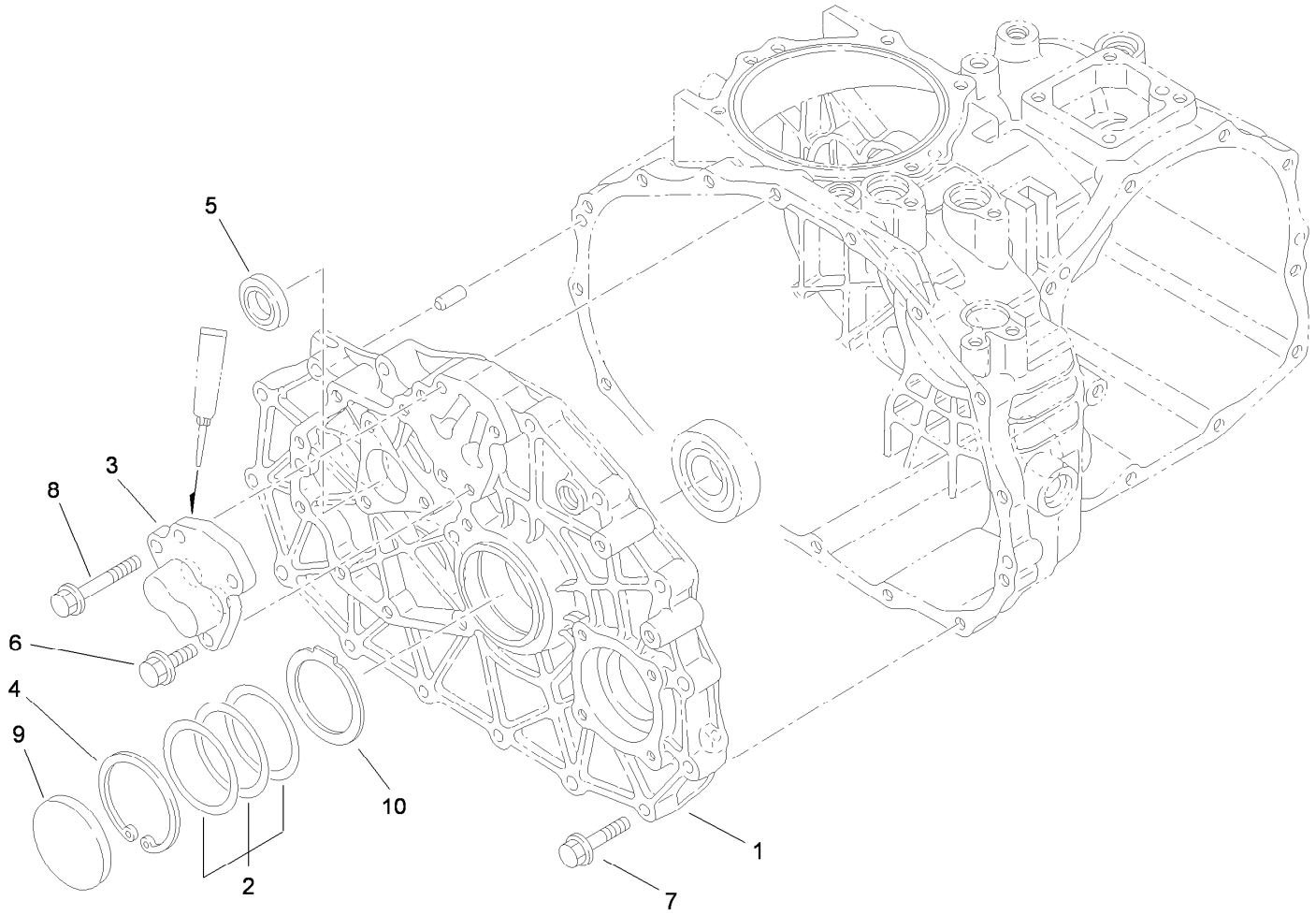

Center Plate Assembly
Transaxle Assembly No. 115-7783

Ref.	*Part Number*	*Qty.*	*Description*
1	100-4461	1	Plate-Center
2	100-4460	1	Shim-Set
3	92-0706	1	Shaft-Fork
4	92-0759	1	Ring-Snap
5	92-0791	1	Seal-Oil
6	33104-025	3	Screw-HHF
7	33104-040	15	Screw-HHF
8	33104-050	1	Screw-HHF
9	92-0807	1	Cap-Sealing
10	100-4465	1	Shim (W/Tab)

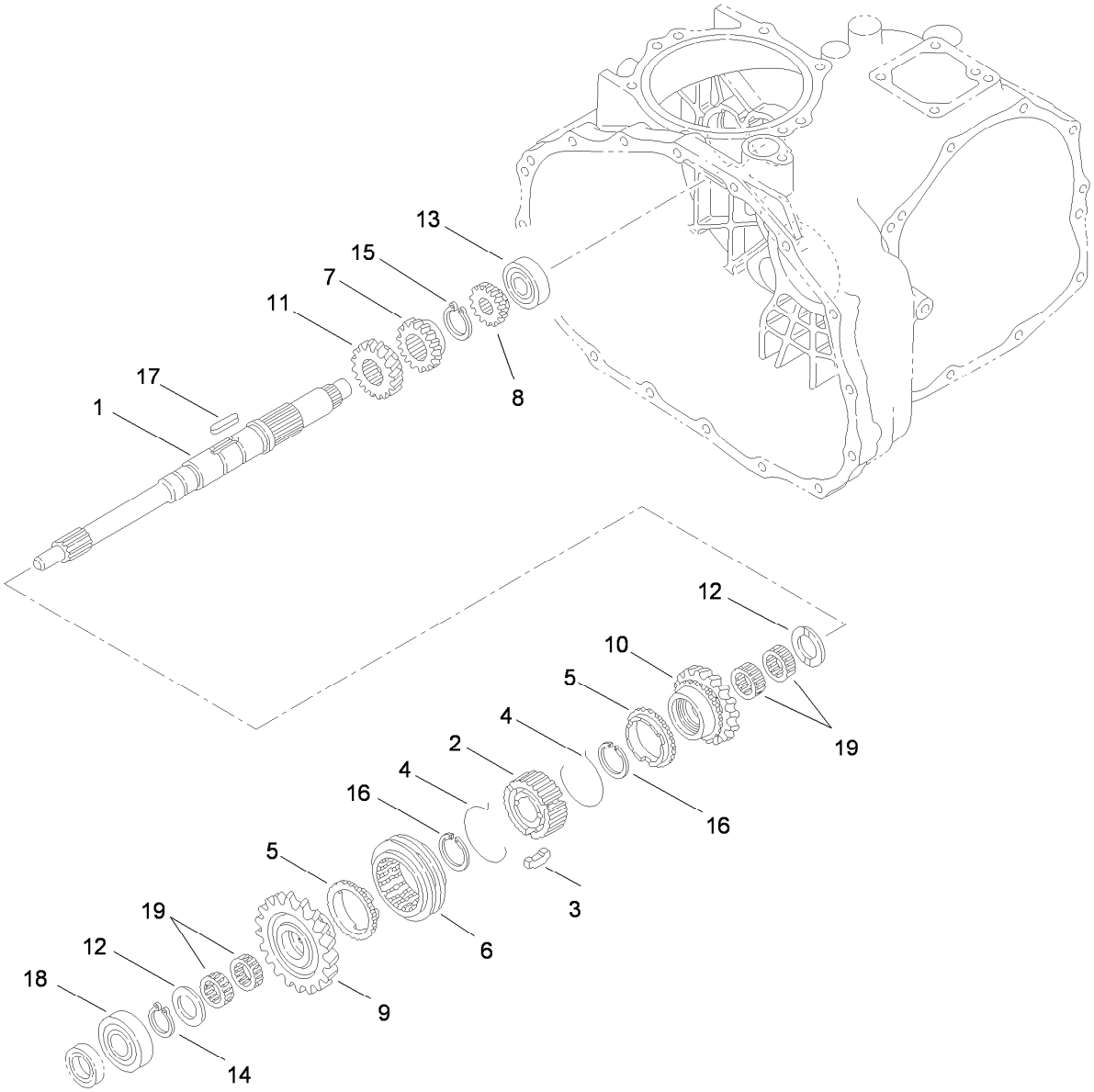

Main Shaft Assembly
Transaxle Assembly No. 115-7783

Ref.	Part Number	Qty.	Description
1	92-0663	1	Shaft-Main
2	92-0664	1	Hub-Synchro
3	92-0665	3	Key-Synchro
4	92-0666	2	Spring-Synchro
5	92-0667	2	Ring-Synchro
6	92-0668	1	Shifter-Synchro
7	92-0672	1	Gear-Main, 18 Tooth
8	92-0673	1	Gear-Main, 14 Tooth
9	110-2521	1	Gear-Main, 27 Tooth
10	110-2522	1	Gear- Main, 24 Tooth

Ref.	Part Number	Qty.	Description
11	92-0687	1	Gear-Main, 16 Tooth
12	92-0740	2	Washer-Thrust
13	92-0650	1	Bearing
14	92-0753	1	Ring-Snap
15	92-0754	1	Ring-Snap
16	92-0763	2	Ring-Snap
17	92-0772	1	Key
18	251-8	1	Bearing-Ball
19	92-0781	4	Bearing-Needle

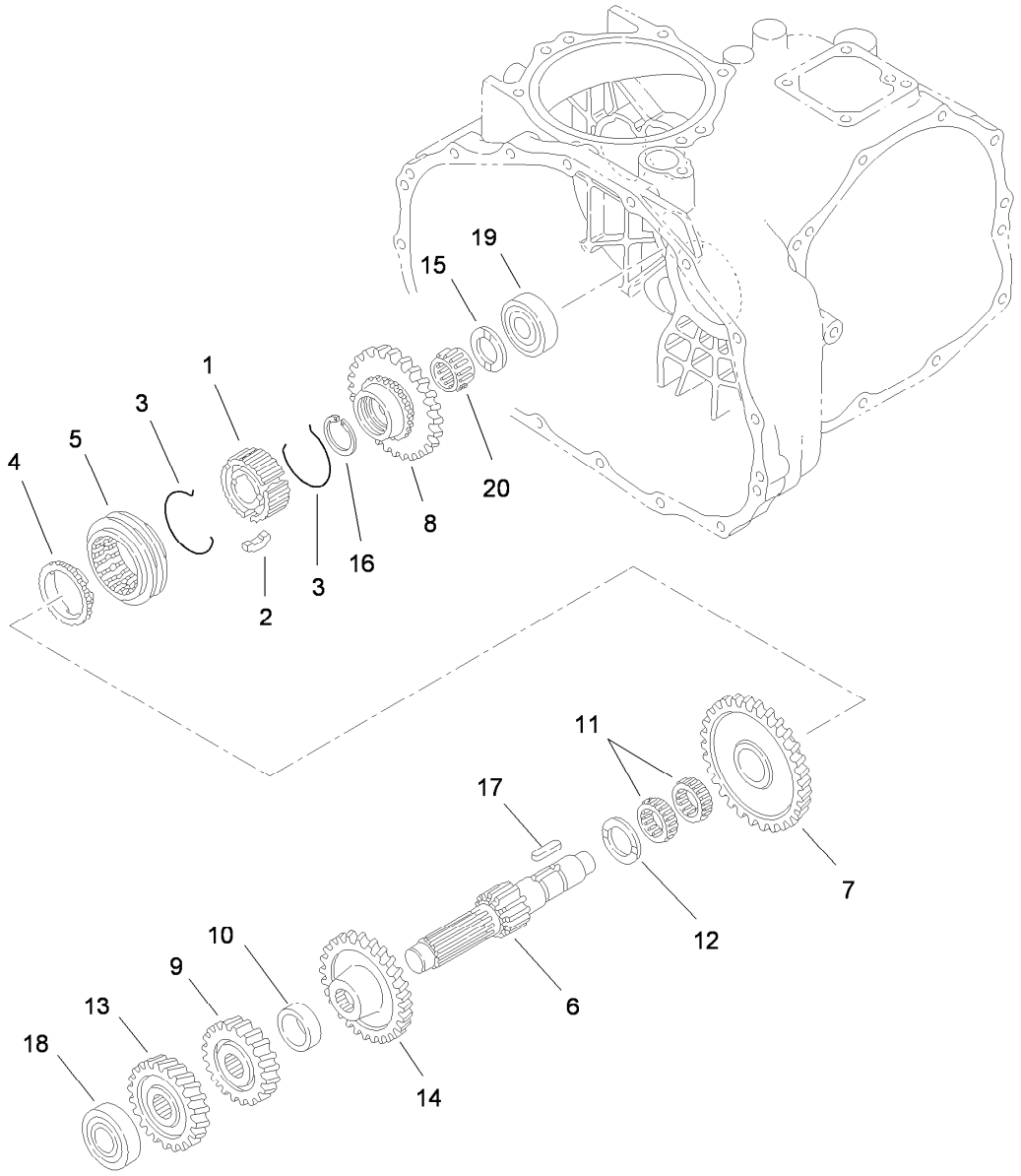

Reduction Shaft Assembly
Transaxle Assembly No. 115-7783

Ref.	Part Number	Qty.	Description
1	92-0664	1	Hub-Synchro
2	92-0665	3	Key-Synchro
3	92-0666	2	Spring-Synchro
4	92-0667	1	Ring-Synchro
5	92-0668	1	Shifter-Synchro
6	92-0674	1	Shaft-Reduction
7	110-2524	1	Gear- Reduction, 49 Tooth
8	92-0819	1	Gear-Reduction, 40 Tooth
9	92-0769	1	Pin-Roll
10	92-0680	1	Collar

Ref.	Part Number	Qty.	Description
11	92-0681	2	Bearing-Needle
12	92-0682	1	Washer-Thrust
13	92-0822	1	Gear-Reduction, 28 Tooth
14	92-0823	1	Gear-Reduction, 43 Tooth
15	92-0740	1	Washer-Thrust
16	92-0673	1	Gear-Main, 14 Tooth
17	92-0772	1	Key
18	105-7985	1	Bearing
19	92-0778	1	Bearing
20	92-0782	1	Bearing-Needle

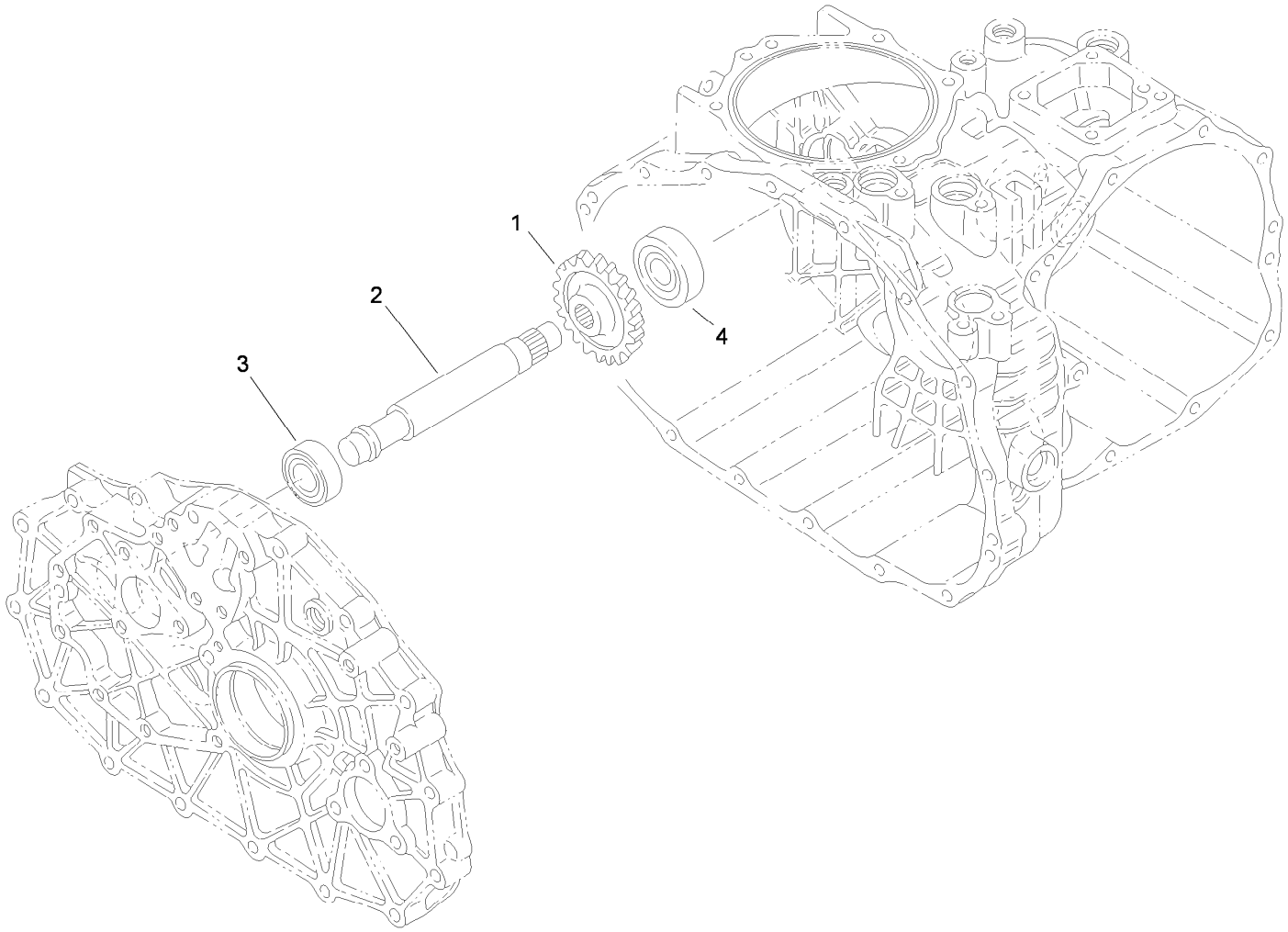

Reverse Shaft Assembly
Transaxle Assembly No. 115-7783

Ref.	*Part Number*	*Qty.*	*Description*
1	92-0684	1	Gear-Reverse, 33 Tooth
2	92-0824	1	Shaft-Idler, Reverse
3	251-346	1	Bearing-Ball
4	92-0778	1	Bearing

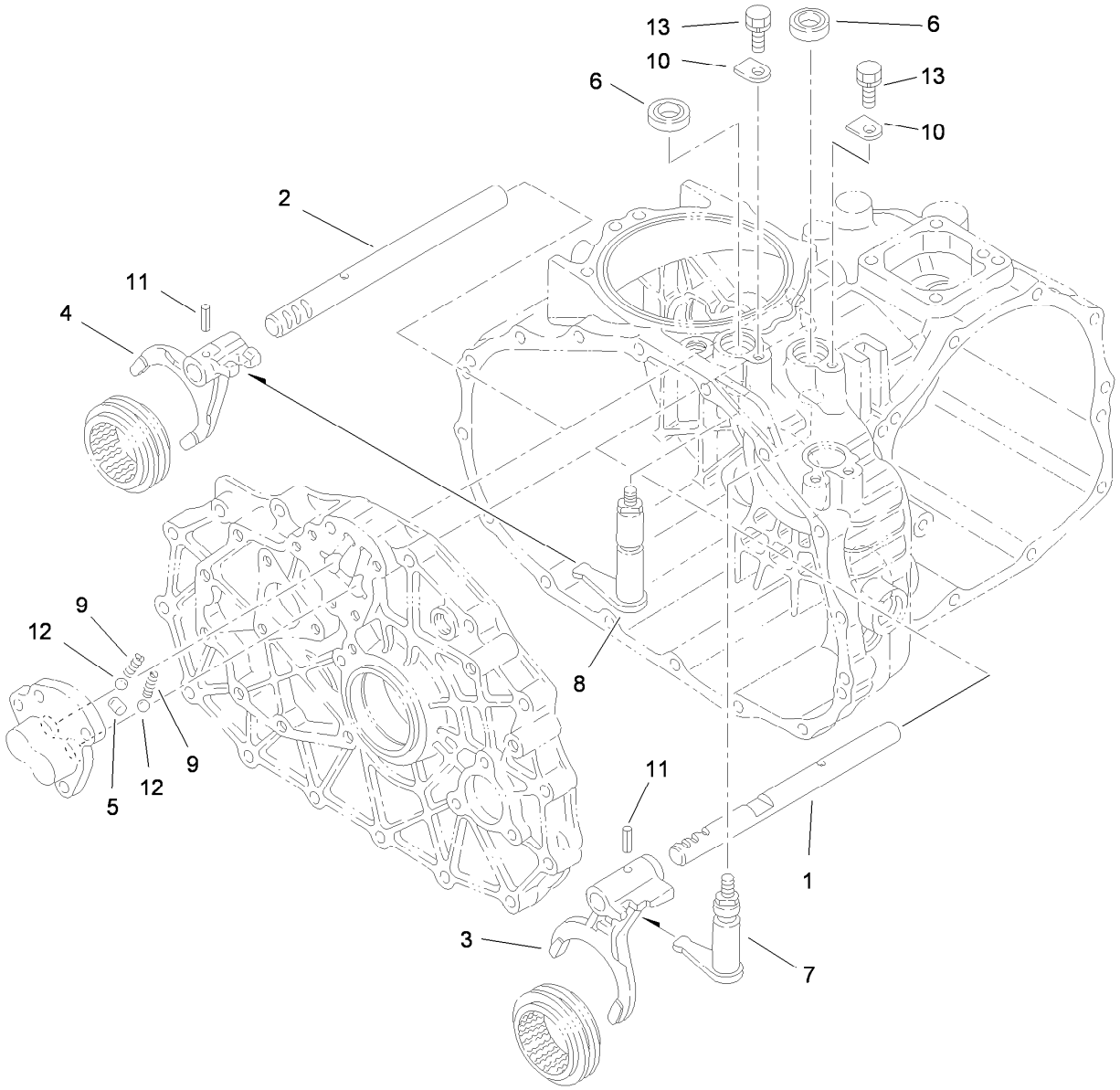

Main Shift Assembly
Transaxle Assembly No. 115-7783

Ref.	*Part Number*	*Qty.*	*Description*
1	92-0698	1	Shaft-Fork
2	92-0699	1	Shaft-Fork
3	92-0700	1	Fork-Shift
4	92-0701	1	Fork-Shift
5	92-0705	1	Lock-Spindle
6	92-0729	2	Seal-Oil
7	92-0816	1	Arm-Shift
8	92-0817	1	Arm-Shift
9	92-0731	2	Spring
10	92-0732	2	Plate-Keeper
11	92-0769	2	Pin-Roll
12	92-0785	2	Ball-Steel
13	33104-016	2	Screw-HHF

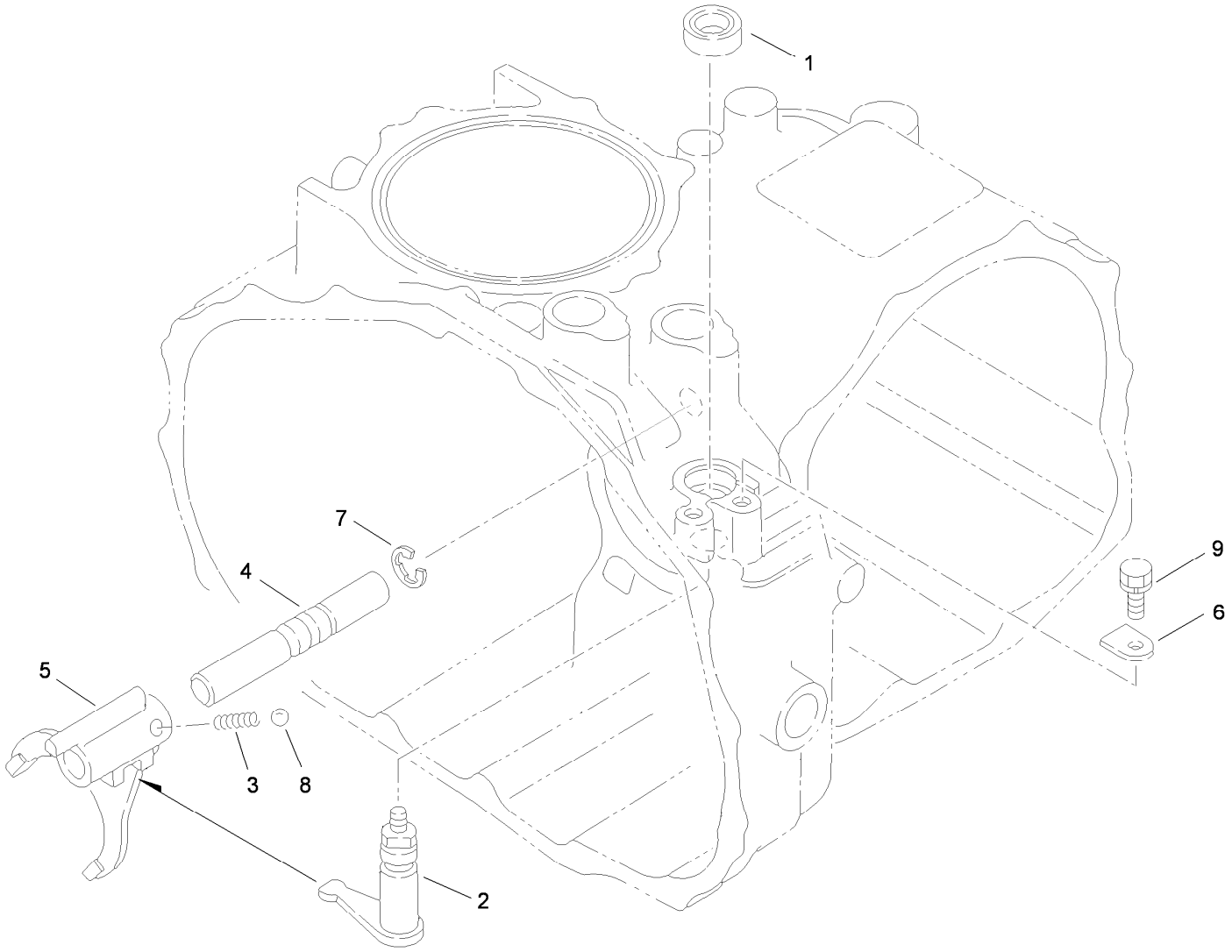

Hi-Lo Shift Assembly
Transaxle Assembly No. 115-7783

Ref.	*Part Number*	*Qty.*	*Description*
1	92-0729	1	Seal-Oil
2	92-0818	1	Arm-Shift
3	92-0731	1	Spring
4	92-0708	1	Shaft-Fork
5	92-0709	1	Fork-Shift
6	92-0732	1	Plate-Keeper
7	92-0761	1	Ring-E
8	92-0785	1	Ball-Steel
9	33104-016	1	Screw-HHF

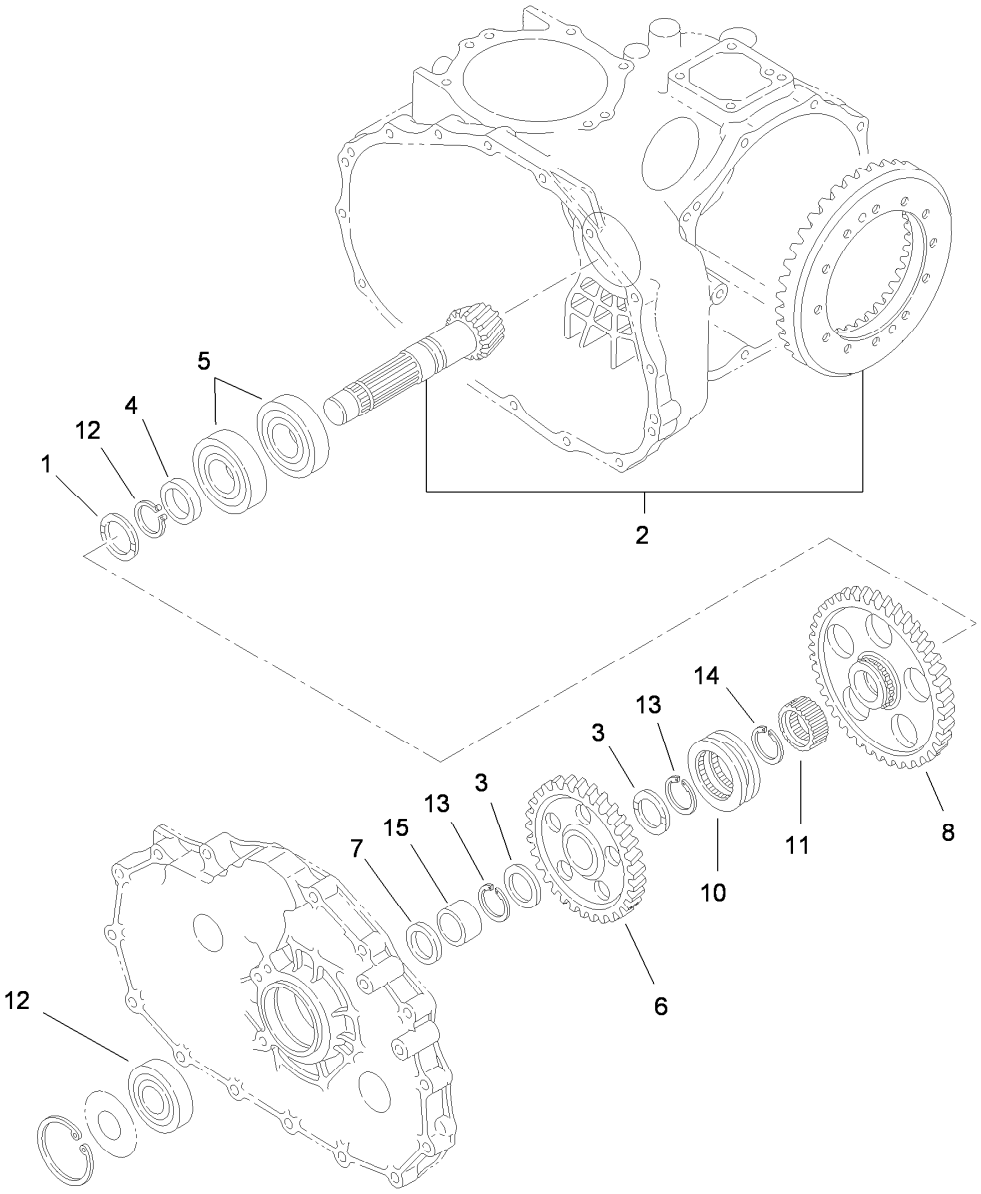

Countershaft Assembly
Transaxle Assembly No. 115-7783

Ref.	*Part Number*	*Qty.*	*Description*
1	92-0741	1	Washer-Thrust
2	105-7983	1	Countershaft And Ring Gear ASM
3	92-0711	2	Washer-Thrust
4	92-0713	1	Collar
5	92-0714	2	Bearing
6	92-0715	1	Gear-Countershaft
7	92-0716	1	Collar
8	92-0717	1	Gear-Countershaft
10	92-0718	1	Shifter
11	105-7986	1	Collar-Spline
12	92-0712	1	Bearing-Ball
13	105-7987	2	Ring-Snap
14	92-0755	1	Ring-Snap
15	92-0783	1	Race-Inner

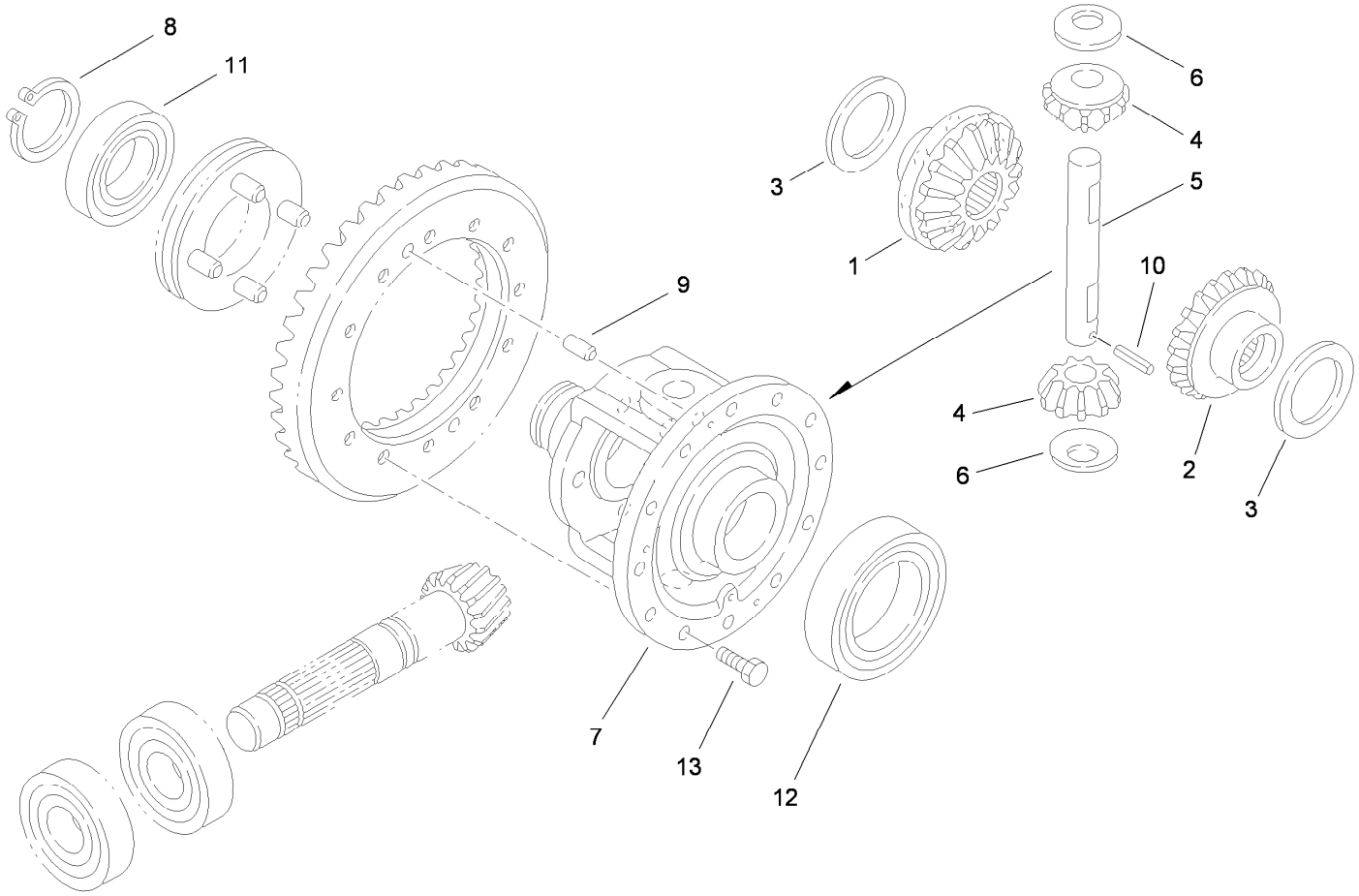

Differential Gear Assembly
Transaxle Assembly No. 115-7783

Ref.	*Part Number*	*Qty.*	*Description*
1	92-0745	1	Gear-Side, LH
2	92-0746	1	Gear-Side, RH
3	92-0747	2	Side-Gear, Left Inner
4	92-0748	2	Pinion-Differential
5	92-0749	1	Shaft-Pinion
6	92-0750	2	Washer
7	92-0720	1	Case-Differential
8	92-0756	1	Ring-Snap
9	92-0765	2	Pin-Parallel
10	92-0768	1	Pin-Roll, Spring
11	92-0775	1	Bearing
12	92-0776	1	Bearing
13	92-0803	12	Bolt

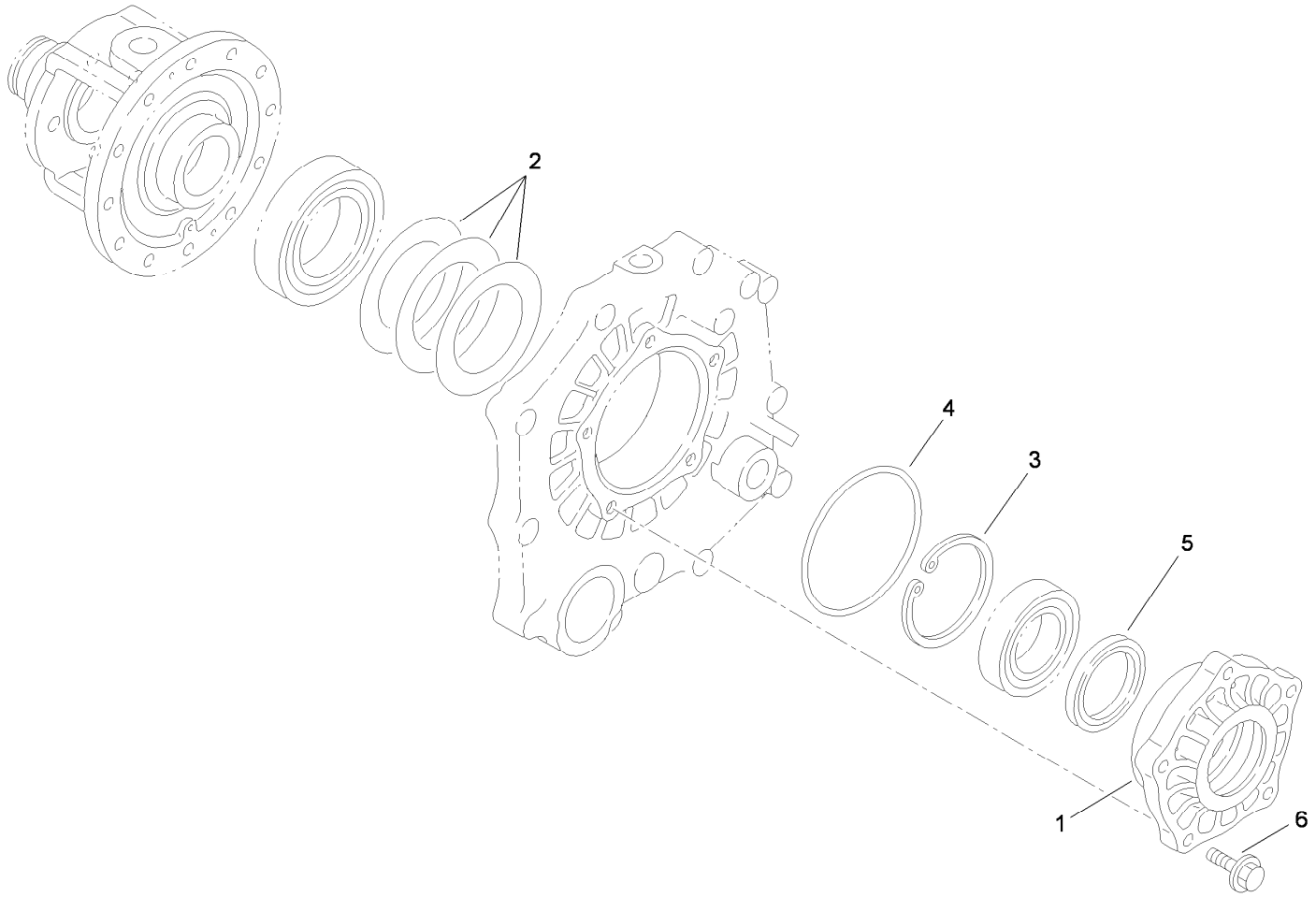

Differential Carrier Assembly
Transaxle Assembly No. 115-7783

Ref.	*Part Number*	*Qty.*	*Description*
1	92-0654	1	Carrier-Differential
2	92-0809	1	Set-Shim
3	92-0760	1	Ring-Snap
4	92-0789	1	O-Ring
5	92-0793	1	Seal-Oil
6	33104-030	5	Screw-HHF

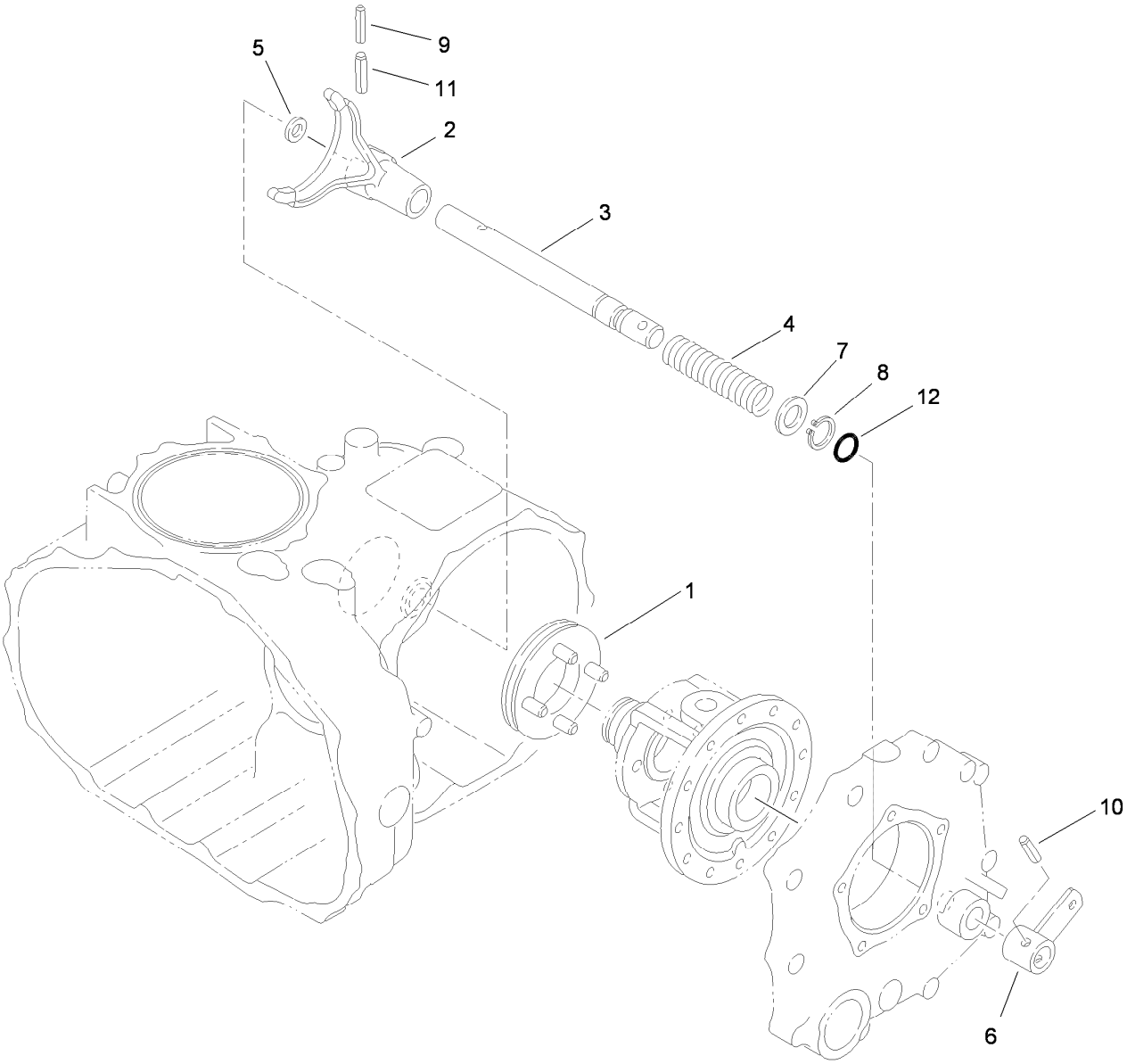

Differential Lock Assembly
Transaxle Assembly No. 115-7783

Ref.	*Part Number*	*Qty.*	*Description*
1	92-0730	1	Slider-Differential, Lock
2	92-0721	1	Fork-Lock, Differential
3	92-0722	1	Shaft-Fork, Lock Differential
4	92-0723	1	Spring-Lock, Differential
5	92-0744	1	Washer
6	92-0724	1	Arm-Lock, Differential
7	92-0733	1	Washer
8	92-0753	1	Ring-Snap
9	92-0768	1	Pin-Roll, Spring
10	92-0770	1	Pin-Roll, Spring
11	92-0771	1	Pin-Roll, Spring
12	92-0787	1	O-Ring

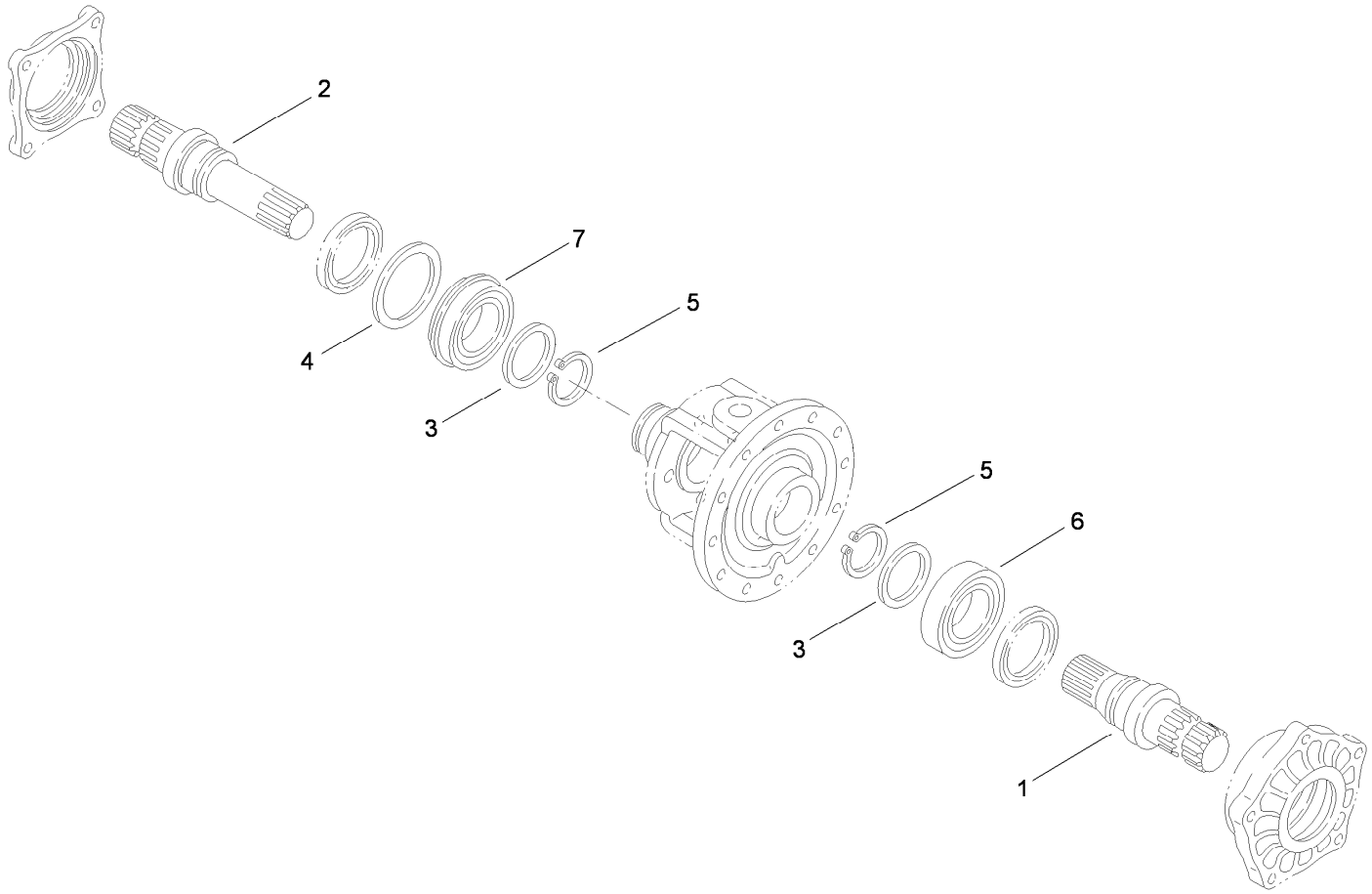

Axle Shaft Assembly
Transaxle Assembly No. 115-7783

Ref.	*Part Number*	*Qty.*	*Description*
1	92-0725	1	Shaft-Axle, Left
2	92-0726	1	Shaft-Axle, Right
3	92-0727	2	Washer
4	92-0728	1	Washer
5	92-0756	2	Ring-Snap
6	92-0775	1	Bearing
7	92-0780	1	Bearing

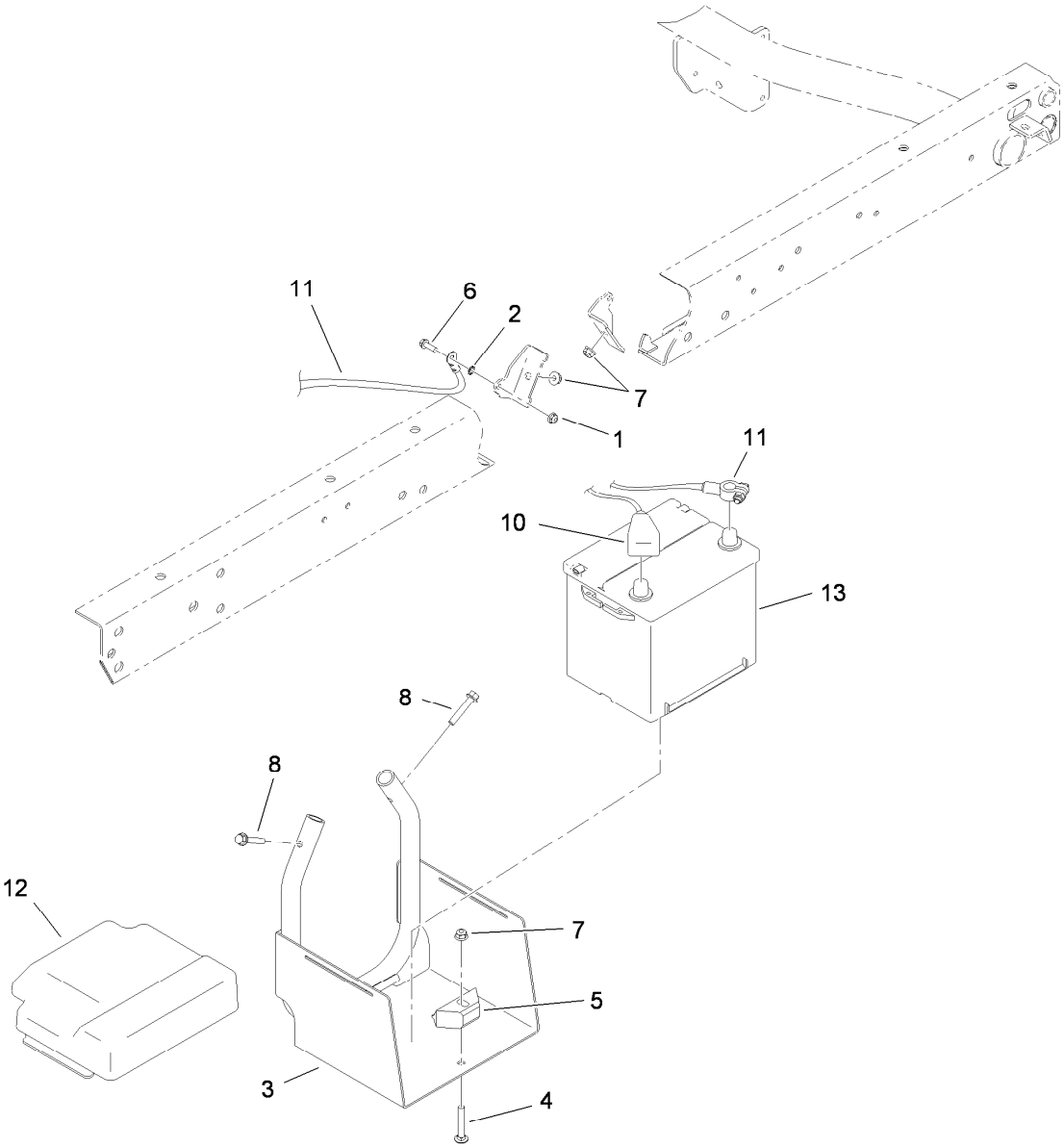

Battery Assembly

Ref.	Part Number	Qty.	Description
1	104-7201	1	Nut-HF
2	3255-8	1	Washer-Lock
3	115-2237-03	1	Tray-Battery
4	3230-6	1	Screw-CARR
5	66-2490	1	Retainer-Battery
6	32105-15	1	Screw-HWH
7	104-8300	3	Nut-HF, NI
8	94-5780	2	Screw-HWH
10	87-8000	1	Cable-Battery, Positive
11	115-8122	1	Cable-Battery, Negative
12	115-2448	1	Cover-Battery
13	106-5187	1	Battery-Dry

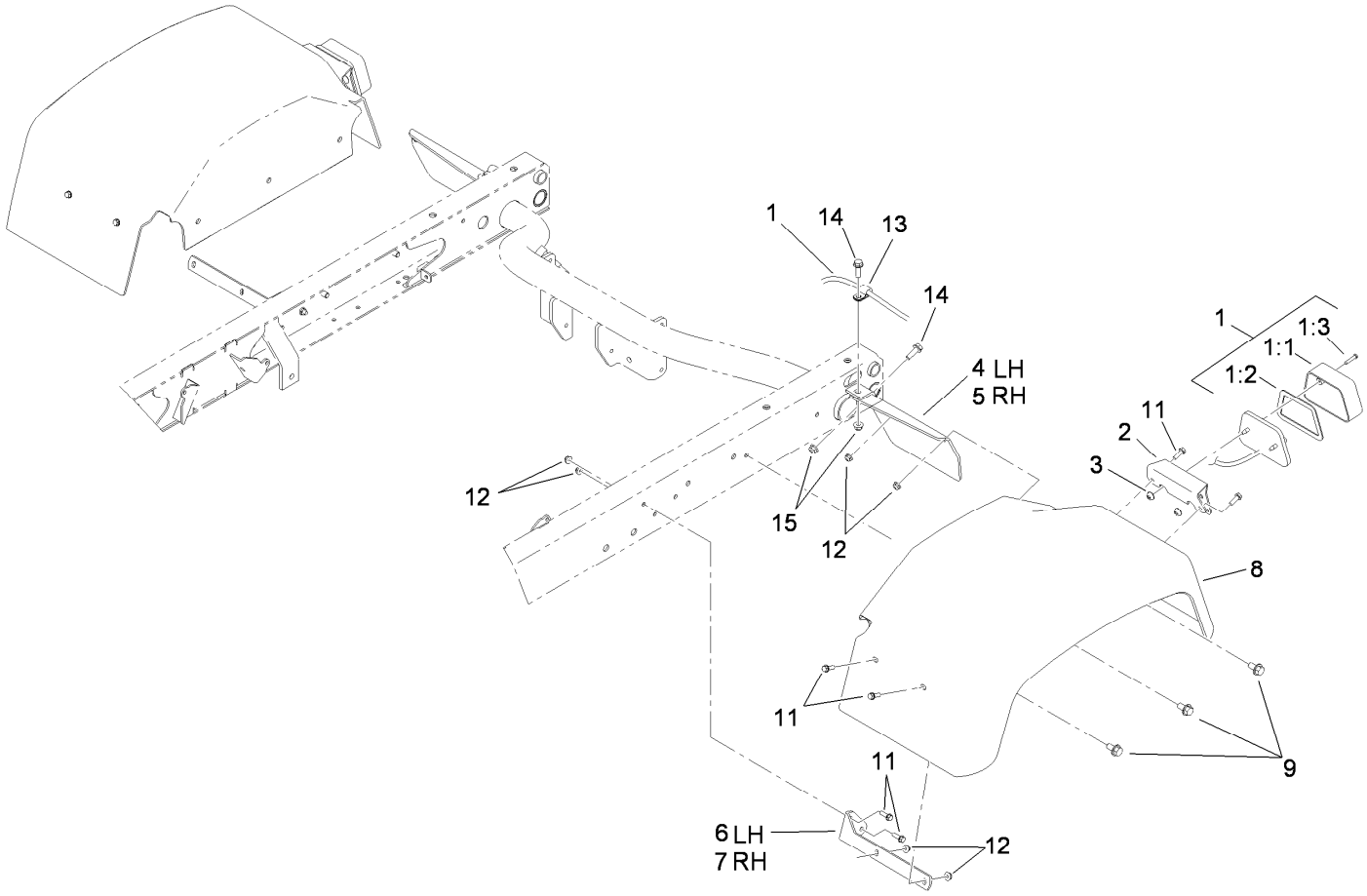

Tail Light and Fender Assembly

Ref.	Part Number	Qty.	Description
1	115-7745	2	Light-Tail, Brake
1:1	87-6300	1	Lens-Light, Tail
1:2	87-6310	1	Gasket-Light, Tail
1:3	32144-93	2	Screw-PPHTF
2	115-2289-03	2	Bracket-Light, Tail
3	3290-506	4	Palnut
4	93-8943-03	1	Bracket-Fender, Rear (LH)
5	93-8944-03	1	Bracket-Fender, Rear (RH)
6	93-8941-03	1	Bracket-Fender, Front (LH)
7	93-8942-03	1	Bracket-Fender, Front (RH)
8	87-6660	2	Fender-Rear
9	110-9380	6	Screw-HWH
11	32105-15	12	Screw-HWH
12	104-7201	12	Nut-HF
13	2412-93	2	Clamp-R
14	3234-17	4	Screw-HHF
15	104-8300	4	Nut-HF, NI

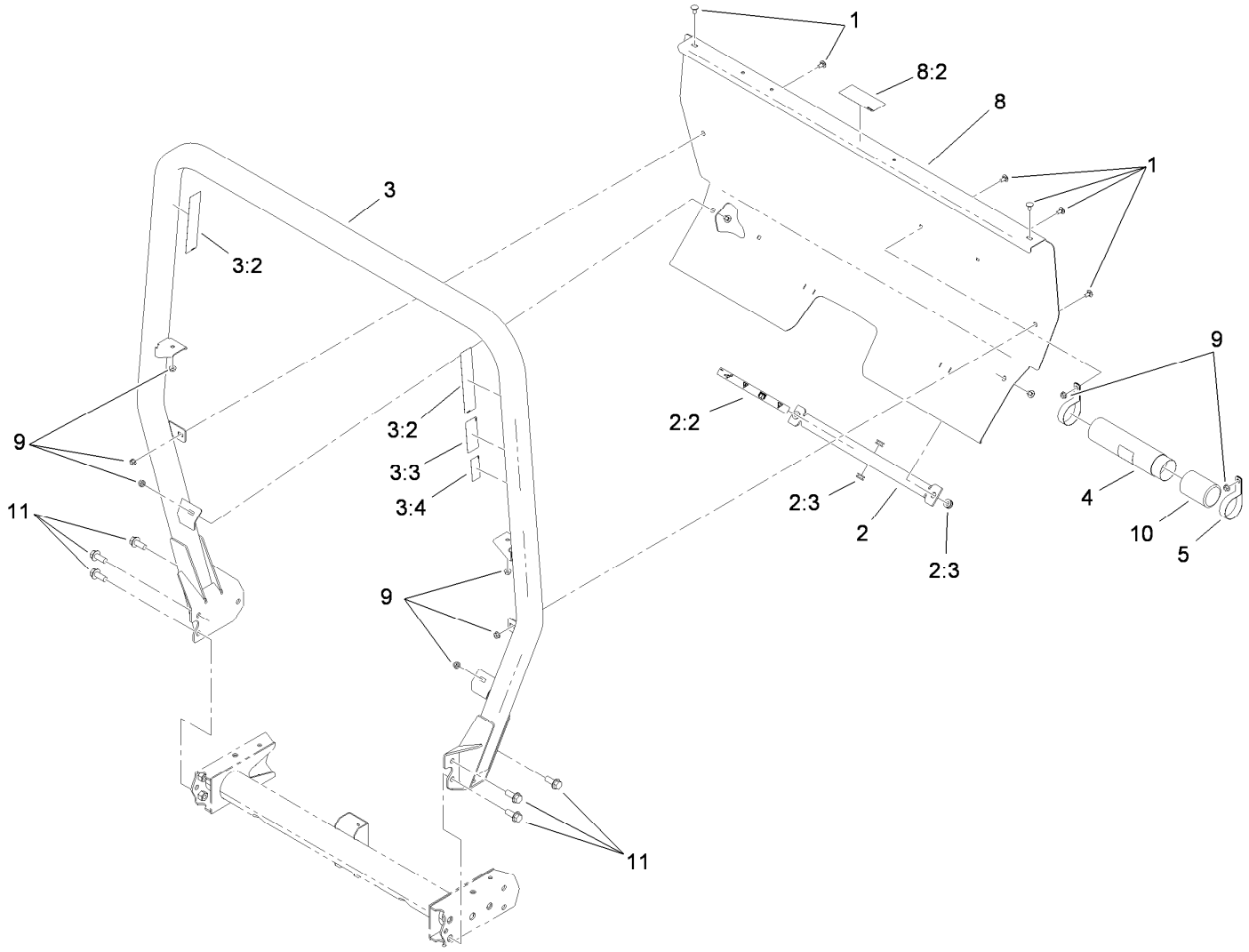

Roll-Over Protection System Assembly

Ref.	*Part Number*	*Qty.*	*Description*
1	3230-18	8	Screw-CARR
2	105-7960	1	Bed Support ASM
2:2	93-9852	1	Decal-Warning
2:3	92-5972	4	Grommet-Rubber
3	115-7910	1	ROPS ASM
3:2	106-7767	2	Decal-ROPS
3:3	93-9850	1	Decal-ROPS, CE
3:4	117-4969	1	Decal-ROPS, ISO
4	104-7050	1	Tube-Manual
5	2412-133	2	Clamp-R
8	115-2213	1	ROPS Cover ASM
8:2	105-4215	1	Decal-Caution
9	32128-20	8	Nut-HF
10	104-7048	1	Cap-Housing
11	3234-38	6	Screw-HHF

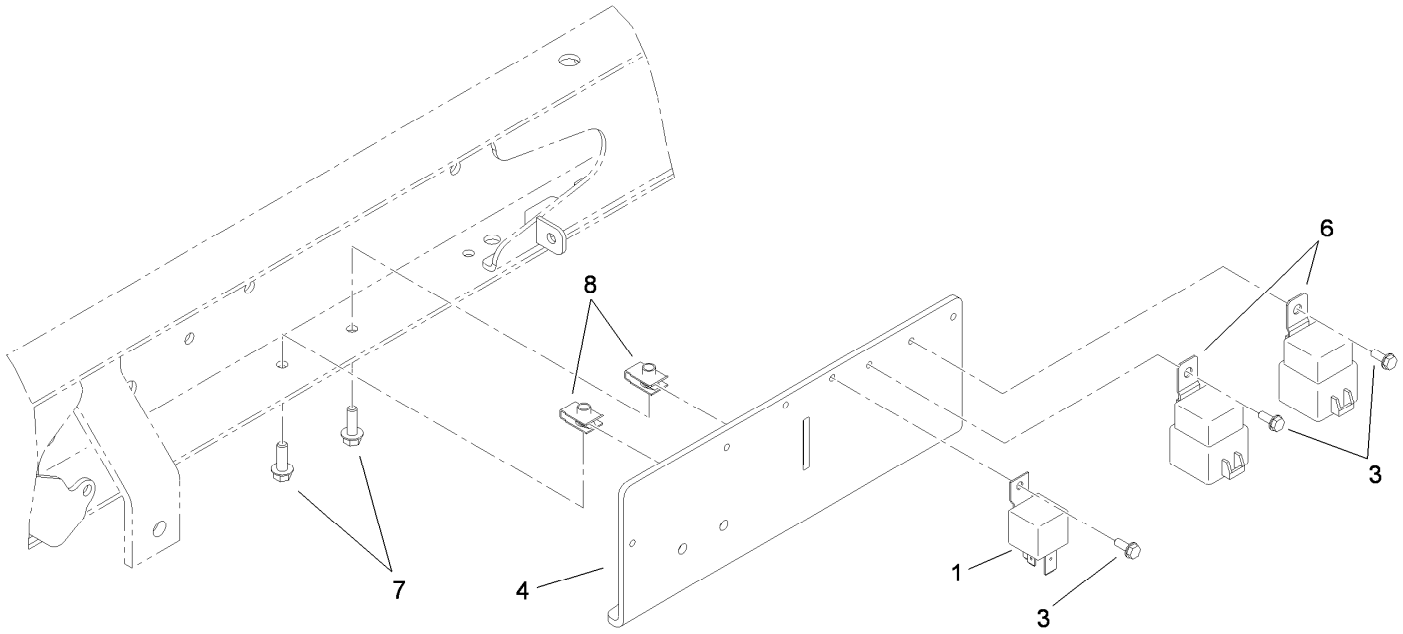

Relay Assembly

Ref.	*Part Number*	*Qty.*	*Description*
1	99-7435	1	Relay-Power
3	32144-112	3	Screw-HWH
4	115-2225	1	Bracket-Relay
6	99-7430	2	Relay
7	3234-4	2	Screw-HHF
8	107069	2	Clip

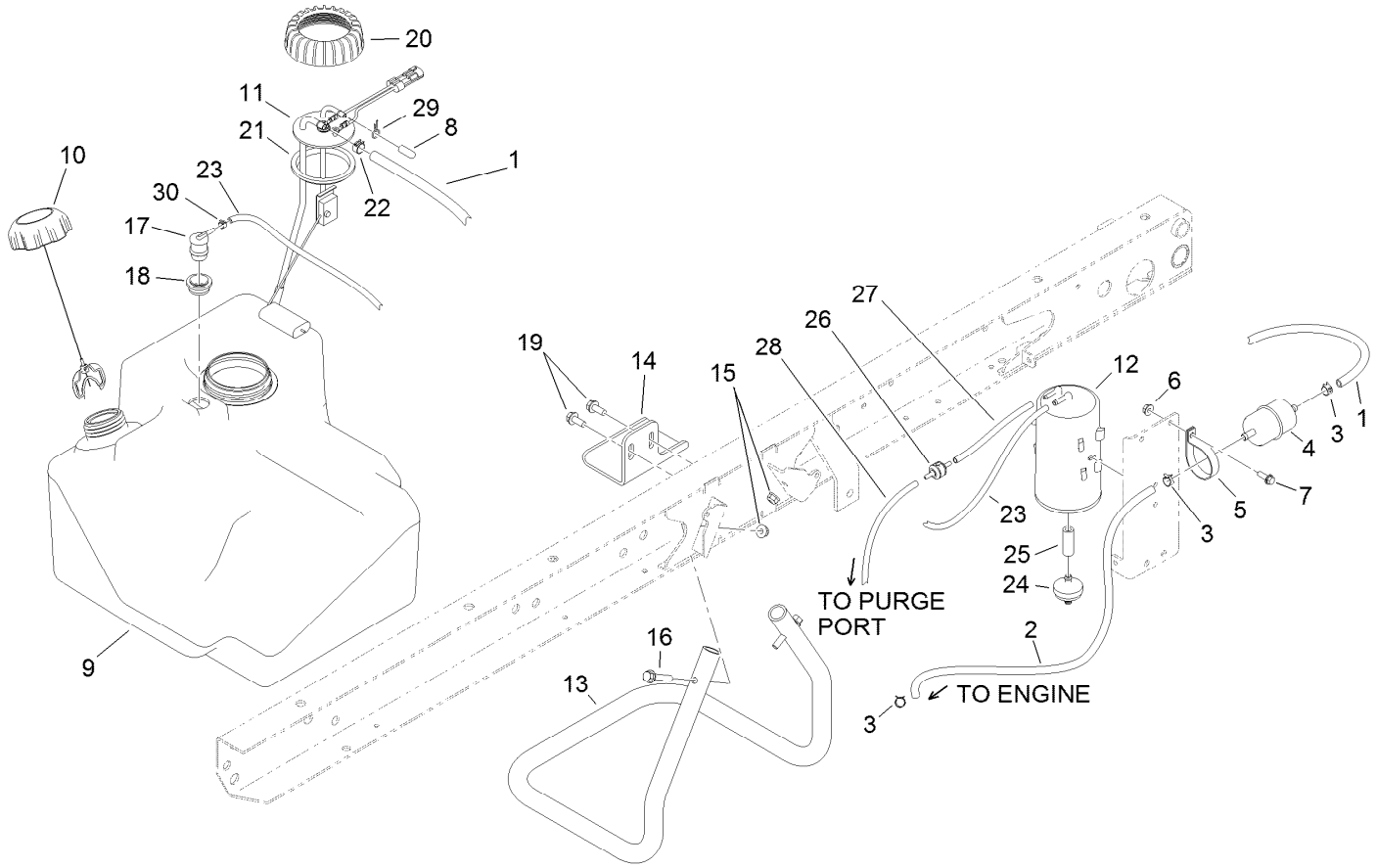

Fuel System Assembly

Ref.	Part Number	Qty.	Description
1	110-3372	1	Hose-Fuel
2	109-0281	1	Hose-Fuel
3	2412-98	3	Clamp-Hose
4	108-3854	1	Filter-Fuel
5	2412-148	1	Clamp-R
6	32128-33	1	Nut-HF
7	3234-4	1	Screw-HHF
8	115-2403	1	Cap
9	119-0735	1	Tank-Fuel
10	115-7788	1	Cap-Fuel
11	114-8348	1	Sender-Fuel
12	115-2251	1	Canister-Carbon
13	115-7767-03	1	Tube-Support
14	114-8404	1	Plate-Retainer
15	104-8300	2	Nut-HF, NI

Ref.	Part Number	Qty.	Description
16	94-5780	2	Screw-HWH
17	114-0285	1	Valve-Rollover
18	114-0284	1	Grommet
19	32144-11	2	Screw-HWHTF
20	115-2162	1	Cap-Pump, Fuel
21	115-2163	1	Gasket-Pump, Fuel
22	92-2379	1	Clamp-Hose
23	110-3254	1	Hose-Fuel
24	115-7854	1	Filter-Fuel, Inline
25	106-5317	1	Hose-Fuel
26	115-7868	1	Valve-Check, Vacuum
27	115-7871	1	Hose-Fuel
28	115-7872	1	Hose-Fuel
29	2412-79	1	Clamp-Hose
30	2412-146	1	Clamp-Hose

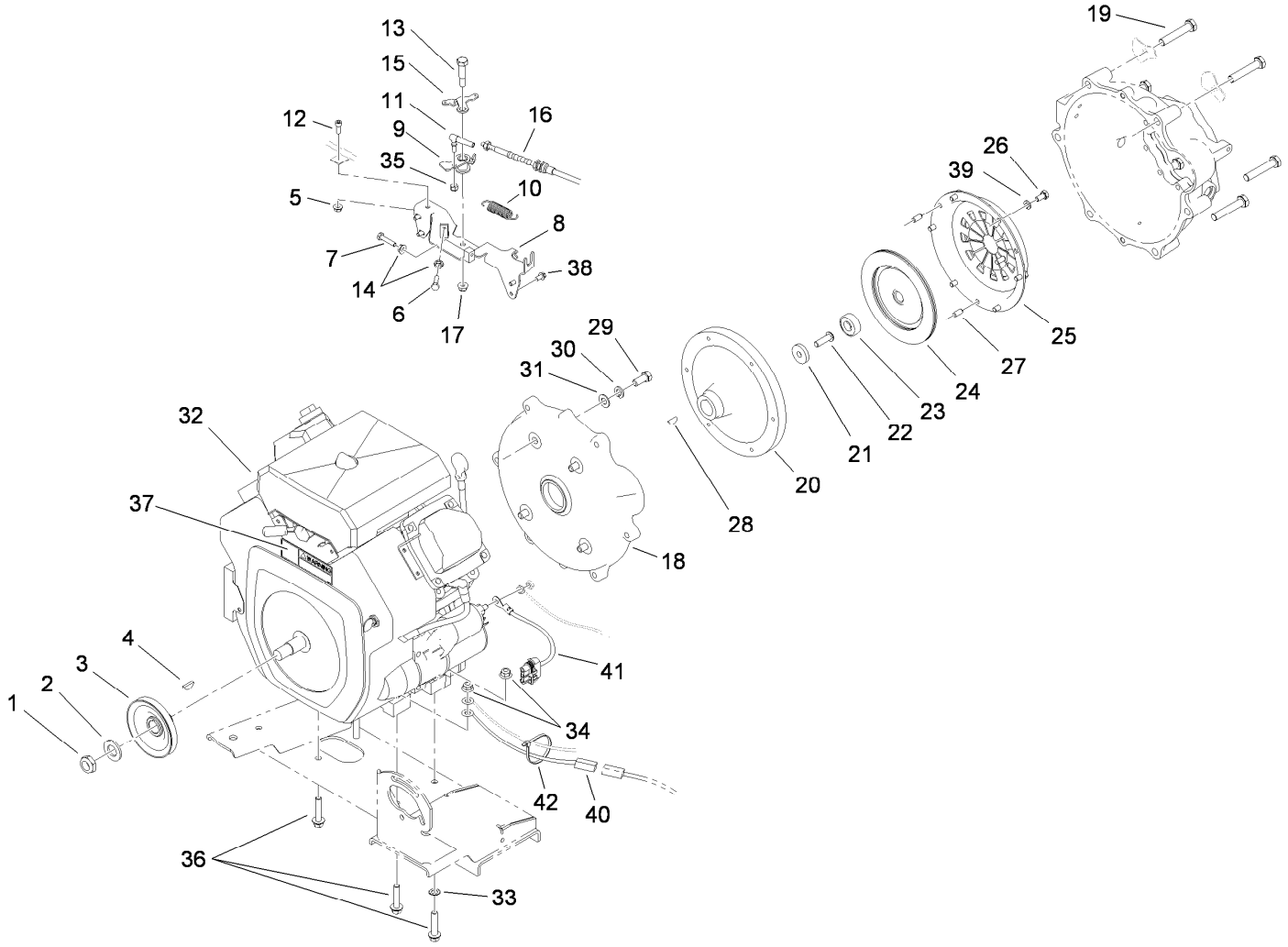

Engine Assembly

Ref.	Part Number	Qty.	Description
1	3296-15	1	Nut-Lock, NI
2	3256-28	1	Washer-Flat
3	87-7710	1	Pulley ASM
4	3257-7	1	Key-Woodruff
5	32128-33	1	Nut-HF
6	329-6	1	Screw-HH
7	329-7	1	Screw-HH
8	87-7780-03	1	Bracket-Throttle
9	87-7800	1	Lever-Throttle
10	67-1450	1	Spring-Idler
11	18-1720	1	Ball Joint
12	3274-15	1	Screw-HSH
13	7-0030	1	Screw-Shoulder, HH
14	3220-1	2	Nut-Jam
15	87-7790	1	Lever-Choke
16	115-2286	1	Cable-Accelerator
17	104-8300	1	Nut-HF, NI
18	107-7991	1	Adapter-Clutch

Ref.	Part Number	Qty.	Description
19	107-7983	6	Screw-HH
20	87-6480	1	Flywheel
21	87-6080	1	Washer
22	3274-63	1	Screw-HSBH
23	87-6460	1	Bearing-Ball (W/Seal)
24	104-9219	1	Disc-Clutch
25	104-9231	1	Plate-Pressure, Clutch
26	33114-016	6	Screw-HH
27	42-7160	3	Pin
28	3257-5	1	Key-Woodruff
29	324-4	4	Screw-HH
30	3253-6	4	Washer-Lock
31	3256-25	4	Washer-Flat
32	115-7819	1	Engine-Kohler, Ch680-3025
32:1	108-3847	1	Filter-Oil ●
33	3255-9	1	Washer-Lock
34	104-8301	4	Nut-HF, NI
35	3296-3	1	Nut-Lock

● Not illustrated

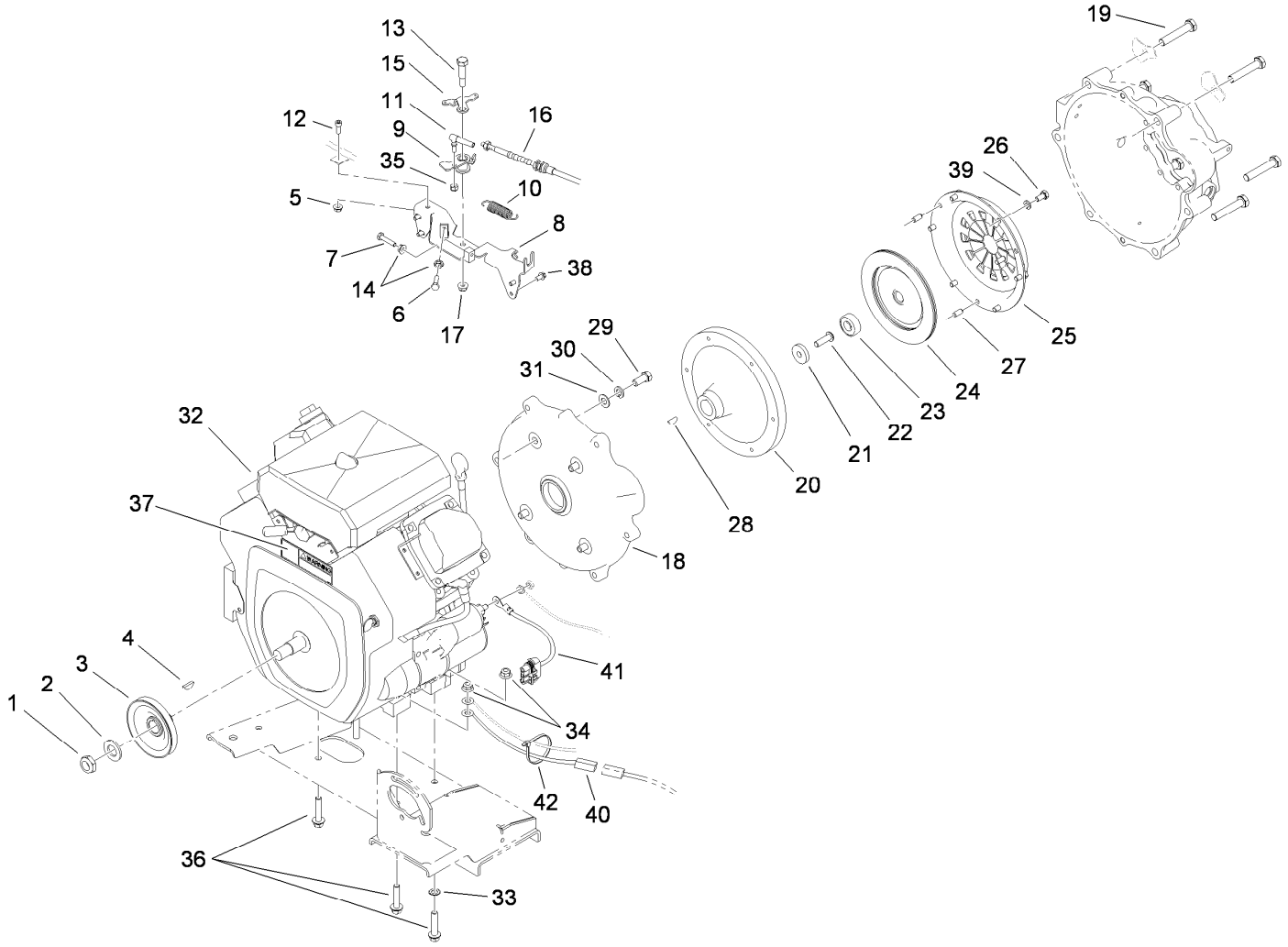

Engine Assembly (continued)

Ref.	Part Number	Qty.	Description
36	3234-19	4	Screw-HHF
37	80-8040	1	Decal-Warning
38	32144-4	4	Screw-HWH
39	3253-4	6	Washer-Lock

Ref.	Part Number	Qty.	Description
40	117-5612	1	Harness-Wire, Ground
41	99-3441	1	Harness-Wire, Fusible Link
42	3290-379	1	Tie-Cable

● Not illustrated

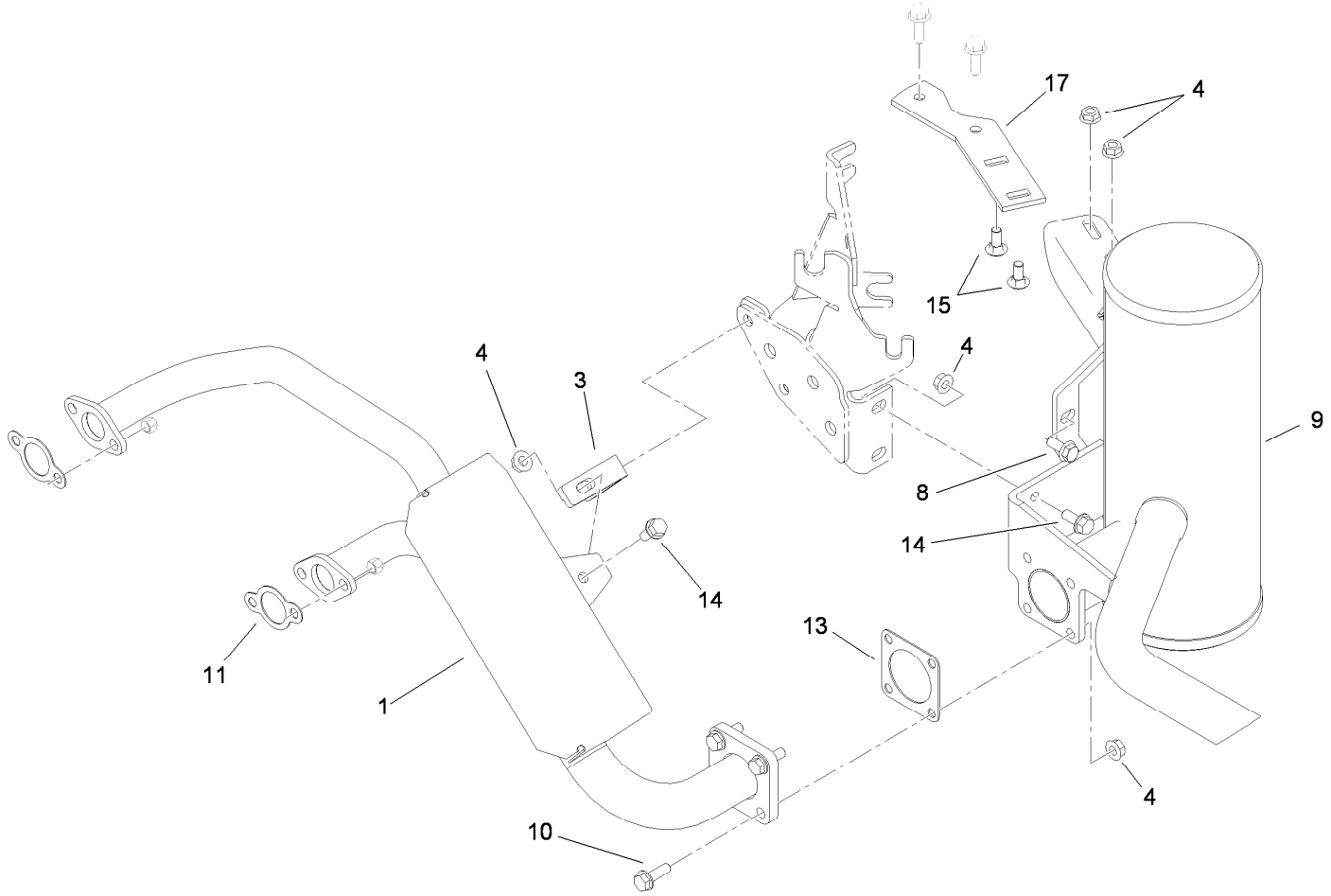

Muffler Assembly

Ref.	*Part Number*	*Qty.*	*Description*
1	106-7855	1	Manifold-Cooled, Air
3	106-7880-03	1	Mount-Angle
4	32128-20	9	Nut-HF
8	98-7977	1	Screw-HHF
9	115-7725	1	Muffler
10	3234-17	4	Screw-HHF
11	93-0350	2	Gasket-Exhaust
13	105-4209	1	Gasket-Muffler
14	3234-5	3	Screw-HHF
15	3230-1	2	Bolt-CARR
17	105-9472	1	Plate-Mount, Muffler

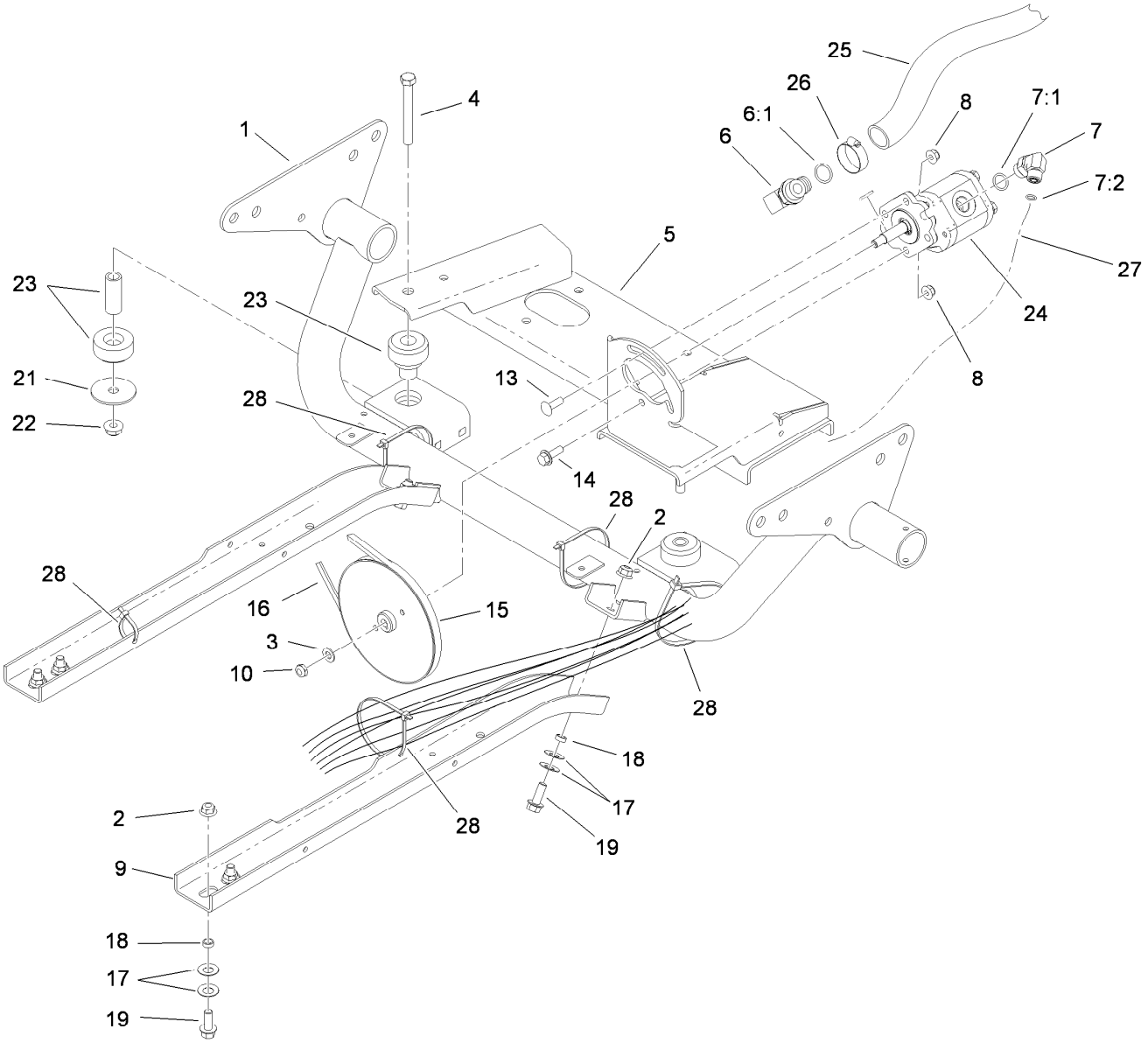

Engine Support Assembly

Ref.	Part Number	Qty.	Description
1	115-2257-03	1	Engine Support ASM
2	104-8301	6	Nut-HF, NI
3	3256-45	1	Washer-Flat
4	324-13	2	Screw-HH
5	115-2352-03	1	Engine Mount ASM
6	87-8170	1	Fitting
6:1	237-80	1	O-Ring
7	340-18	1	Fitting-HYD, 90 DEG
7:1	237-79	1	O-Ring
7:2	237-22	1	O-Ring
8	104-8300	2	Nut-HF, NI
9	87-4730-03	2	Guard-Belly
10	3296-5	1	Nut-Hex
13	3230-22	1	Screw-CARR

Ref.	Part Number	Qty.	Description
14	3234-29	1	Screw-HHF
15	87-7740	1	Pulley
16	87-8370	1	V-Belt
17	3290-413	12	Washer-Belleville
18	76-9100	6	Spacer
19	3234-11	6	Screw-HHF
21	87-5100	2	Washer-Snubbing
22	114-8417	2	Nut-HF, NI
23	106-7865	2	Mount-Engine
24	112-2983	1	Pump-Gear, Hydraulic
25	87-8030	1	Hose-Suction
26	2412-129	1	Clamp-Hose
27	95-0965	1	Hose ASM
28	3290-379	5	Tie-Cable

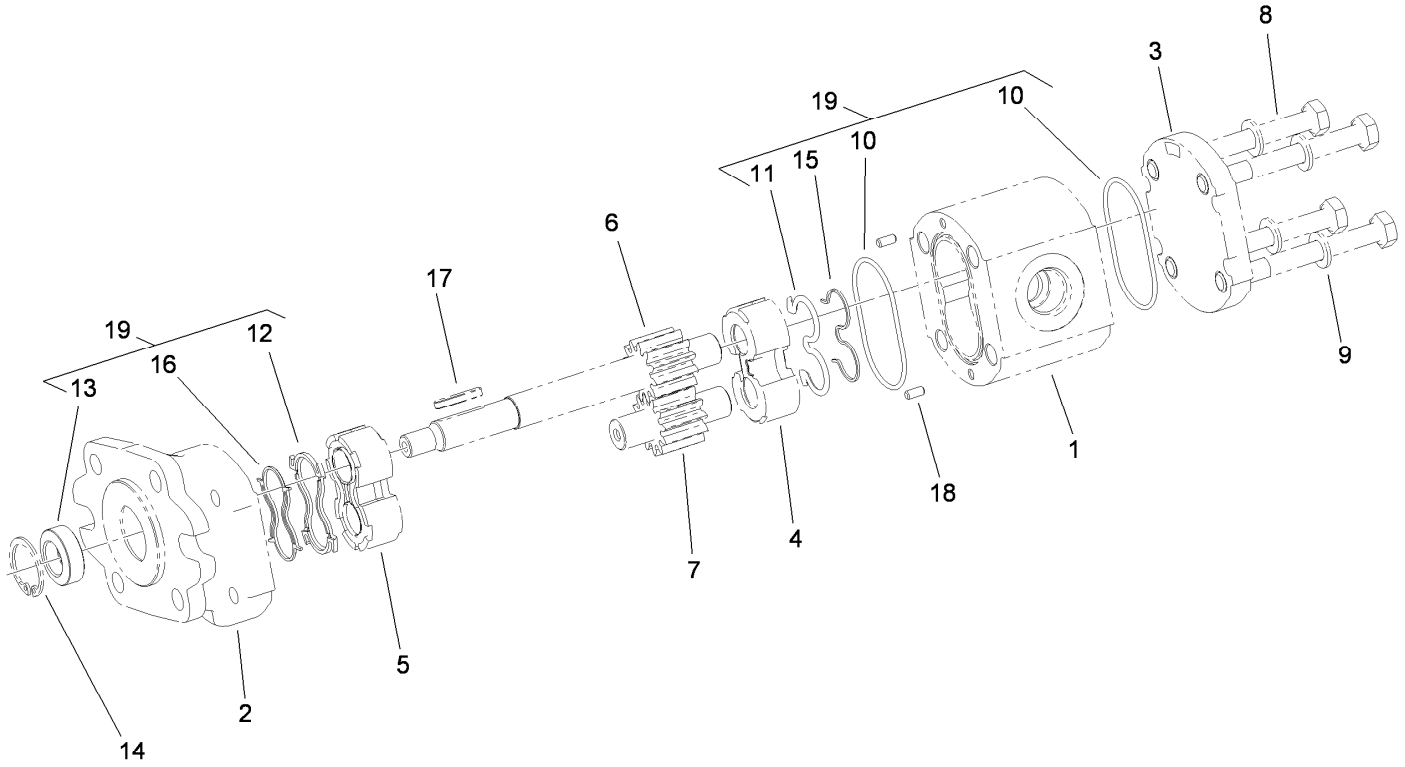

Hydraulic Gear Pump Assembly No. 112-2983

Ref.	Part Number	Qty.	Description
1		1	Body ●
2		1	Cover-Front ●
3		1	Cover-Rear ●
4		1	Plate-Thrust ●
5		1	Plate-Thrust, Upper ●
6		1	Shaft-Drive ●
7		1	Gear-Driven ●
8		4	Screw-HH ●
9		4	Washer ●
10		2	O-Ring Seal ●

Ref.	Part Number	Qty.	Description
11		1	Seal ●
12		1	Seal-Upper ●
13		1	Seal-Shaft ●
14		1	Ring-Clip ●
15		1	Seal-Extrusion, Anti ●
16		1	Seal-Extrusion, Anti ●
17	115-7856	1	Key-Square
18		1	Pin-Dowel ●
19	112-0199	1	Seal Kit

● Not serviced separately

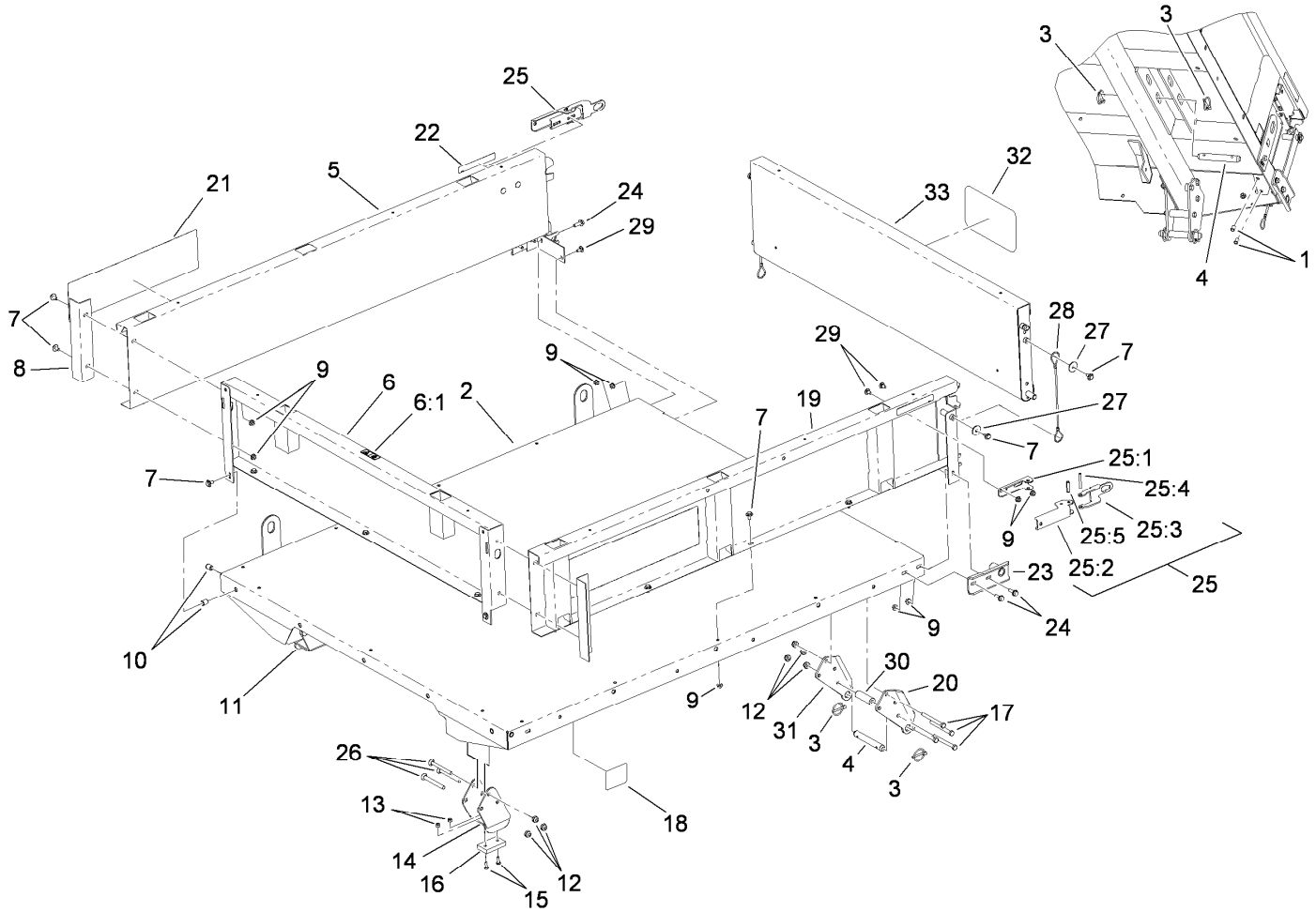

Full Bed and Side Panel Assembly

Ref.	Part Number	Qty.	Description
1	32148-6	4	Insert-Nut
2	93-9724-03	1	Flatbed-Full
3	92-1298	8	Pin-Lynch
4	92-1233	4	Pin-Clevis
5	92-1255-03	1	Panel-Side, RH
6	92-5982	1	Front Panel ASM
6:1	115-7739	1	Decal-No Riders
7	3234-7	21	Screw-HHF
8	92-1320-03	2	Angle-Side
9	32128-20	27	Nut-HF
10	32148-7	4	Nut-Insert
11	106-2423-03	1	Bracket-Spacer, RH
12	3296-44	14	Nut-Lock, NI
13	3296-42	4	Nut-Lock, NI
14	106-2422-03	1	Bracket-Spacer, LH
15	3250-45	4	Screw-SPH
16	93-9719	2	Block-Wear
17	323-42	8	Screw-HH
18	93-9899	2	Decal-Warning
19	92-1248-03	1	Panel-Side, LH

Ref.	Part Number	Qty.	Description
20	93-9720-03	2	Bracket-Pivot, Long (LH)
21	115-7913	2	Decal
22	93-9868	2	Decal-Caution
23	92-1265-03	2	Bracket-Pivot
24	3234-29	6	Screw-HHF
25	99-1123	2	Latch ASM
25:1	92-1271	1	Pivot-Latch
25:2	99-1113	1	Handle-Latch
25:3	99-1112	1	Plate-Retainer
25:4	32121-78	1	Pin-Roll
25:5	32121-25	1	Pin-Roll
26	3231-24	6	Screw-CARR
27	3256-57	4	Washer-Flat
28	93-9595	2	Lanyard
29	3230-18	6	Screw-CARR
30	93-9575	2	Tube-Pivot, Flatbed
31	93-9721-03	2	Bracket-Pivot, Long (RH)
32	105-4222	1	Decal
33	92-1259-03	1	Tailgate-Rear

Attachments and Accessories

For 07369 Workman HD Utility Vehicle with Bed

Product Name	Model/Part
Full Area Flatbed	07301
Full Area Flatbed Side Kit	07302
Fold Down Side Kit	07303
Left-Hand Light Kit	07315
Right-Hand Light Kit	07317
2/3 Area Flatbed	07321
2/3 Area Flatbed Side Kit	07322
Bed Liner	07331
Cab	07339
1/3 Area Flatbed	07341
1/3 Area Stake Side Kit	07342
1/3 Area Platform Lift	07344
Canopy	07372
Windshield	07373
Heater Cab	07374
Cab Door Kit	07375
Solid Window Cab Door Kit	07376
Hitch Frame Kit	07377
4 Post Roll-Over Protection System	07378
Rear PTO Kit	07419
Hand Throttle Kit	07420
Spiker	08856
Finish Grader	08867
Backup Alarm Kit	107-8037
Premium Engine Oil, 10w30 (55 Gallon Drum)	108-1179
Premium Engine Oil, 10w30 (5 Gallon Pail)	108-1180
Premium ATF (Drum)	108-1185
Premium ATF (Pail)	108-1186
Premium All Purpose Grease (Tube)	108-1190
Remote Hydraulics Manifold Kit	110-2626
Tire-Rear, 24x13-12	110-5132
Spark Arrestor Kit	112-1688
Wheel-12in x 8.0in	114-8260
Tachometer And Speedometer Kit	115-7786
Side Mirror Kit	115-7849
Roll-Over Protection System Signal Kit	117-4825
Worklight Kit	117-4827
Remote Hydraulic Float Kit	117-4828
Cab Mirror Kit	117-4830
Receiver Hitch Kit	117-4831
Trailer Signal Kit	117-4836
Trailer Brake Kit	117-4837
Canopy for Four-Post Roll-Over Protection System Kit	119-9457
Single Nozzle Kit	41024
Hose Reel Kit	41097
Spray Gun Kit 9 (inc. 25ft Of 1/2in Hose)	41133

Attachments and Accessories (continued)

Pro Foam Concentrate (4 x 1 Gallon) 41157
Sonic Boom Kit 41217
Workman 200 Spray System 41235
Foam Marker Kit 41236
Power Holster Hitch Kit 44209
Topdresser 1800 44225
Fifth Wheel Hitch Kit 44230
Cushman GA 60 Aerator Adapter Kit 44232
Core Harvester Adapter Kit 44242
Automatic Tailgate Release Kit 92-1220
Fuse Block 92-2641
PTO Over Running Clutch Kit 92-2655
Topdresser 1800 Lift Kit 92-4452
Mid-Mount Kit for Platform Lift 93-3741
1/3 Area Cover Kit 93-9225
Rear 1/3 Area Mounting Kit 93-9249
Tire-Rear, 23x8.50-12 98-2993
Tire-Rear, Industrial 99-1091

TORO®

Count on it.