Form No. 3363-982 Rev C

TORO®

Count on it.

Parts Catalog

# Workman® HD Utility Vehicle with Bed

**Model No. 07369—Serial No. 310000001 and Up**

Register at www.Toro.com.
Original Instructions (EN)

*3363-982* C

# Ordering Replacement Parts

To order replacement parts, please supply the part number, the quantity, and the description of each part desired.

### Understanding Reference Numbers

Each identified part in an illustration has a reference number. The reference number for a part also appears in the parts list, along with other information about the part.

This catalog uses two special reference number formats, one to indicate parts in a service assembly and another to indicate the quantity of a given part in an illustration.

### Service Assembly Reference Numbers

Parts in service assemblies have reference numbers in the form a:b. The a represents the reference number of the entire service assembly and the b represents a sequential number unique to each part within the service assembly.

For example, a wheel assembly might be identified by reference number 6, the tire by 6:1, the valve by 6:2, and the wheel by 6:3. When you order the assembly identified by reference number 6, you receive all parts identified by reference numbers 6:1,6:2, and 6:3. However, you may also order any part individually. Reference numbers of this type appear in illustration and in parts lists.

### Reference Numbers Indicating Quantity

In an illustration, if a reference number indicates more than one part, the reference number has the form nX y. The n represents the quantity of the part, the X is the multiplication symbol, and the y represents the reference number.

For example, in an illustration, the reference number 2X 37 means that two of the parts identified by reference number 37 are indicated.

# Contents

Hood and Bumper Assembly . . . 5
Dash Assembly . . . 6
Pedal Assembly . . . 7
Master Cylinder Assembly No. 104-6782 . . . 8
Hydraulic Brake Line Assembly . . . 9
Clutch Linkage Assembly . . . 10
Shroud and Seat Assembly . . . 11
Console Assembly . . . 13
Shift Assembly No. 106-7887 . . . 14
Steering Hydraulic Assembly . . . 15
Steering Valve Assembly No. 115-7926 . . . 16
Lift Valve and Hydraulics Assembly . . . 17
Control Valve Assembly No. 43-1950 . . . 19
Hydraulic Cylinder Assembly No. 106-7939 . . . 20
Front Wheel Assembly . . . 21
Hydraulic Cylinder Assembly No. 112-3217 . . . 22
Steering Linkage Assembly . . . 23
Front Suspension Assembly . . . 24
Front Control Arm Assembly . . . 25
Rear Frame Assembly . . . 26
Rear Axle Assembly . . . 27
Driveshaft Assembly No. 114-8367 . . . 28
Transaxle Assembly . . . 29
Case Assembly Transaxle Assembly No. 115-7783 . . . 30
Center Plate Assembly Transaxle Assembly No. 115-7783 . . . 31
Main Shaft Assembly Transaxle Assembly No. 115-7783 . . . 32
Reduction Shaft Assembly Transaxle Assembly No. 115-7783 . . . 33
Reverse Shaft Assembly Transaxle Assembly No. 115-7783 . . . 34
Main Shift Assembly Transaxle Assembly No. 115-7783 . . . 35
Hi-Lo Shift Assembly Transaxle Assembly No. 115-7783 . . . 36
Countershaft Assembly Transaxle Assembly No. 115-7783 . . . 37
Differential Gear Assembly Transaxle Assembly No. 115-7783 . . . 38
Differential Carrier Assembly Transaxle Assembly No. 115-7783 . . . 39
Differential Lock Assembly Transaxle Assembly No. 115-7783 . . . 40
Axle Shaft Assembly Transaxle Assembly No. 115-7783 . . . 41
Battery Assembly . . . 42
Tail Light and Fender Assembly . . . 43
Roll-Over Protection System Assembly . . . 44
Relay Assembly . . . 45
Fuel System Assembly . . . 46
Engine Assembly . . . 47
Muffler Assembly . . . 49
Engine Support Assembly . . . 50
Hydraulic Gear Pump Assembly No. 112-2983 . . . 51
Full Bed and Side Panel Assembly . . . 52
Crankshaft Assembly Kohler CH680-3025A . . . 53
Crankcase Assembly Kohler CH680-3025A . . . 54
Oil Pan and Lubrication Assembly Kohler CH680-3025A . . . 55
Head, Valve and Breather Assembly Kohler CH680-3025A . . . 56
Ignition and Electrical Assembly Kohler CH680-3025A . . . 58
Blower Housing Assembly Kohler CH680-3025A . . . 60
Starter Assembly Kohler CH680-3025A . . . 61
Fuel System Assembly Kohler CH680-3025A . . . 62
Engine Control Assembly Kohler CH680-3025A . . . 63

**© 2017—The Toro® Company**
**8111 Lyndale Avenue South**
**Bloomington, MN 55420**



**Contact us at www.Toro.com.**
**Printed in the USA.**
**All Rights Reserved**

# Contents (continued)

Air Intake and Filtration Assembly Kohler CH680-3025A . . . . . 64
Exhaust Assembly Kohler CH680-3025A . . . . . 65
Decals Kohler CH680-3025A . . . . . 66
Attachments and Accessories . . . . . 67

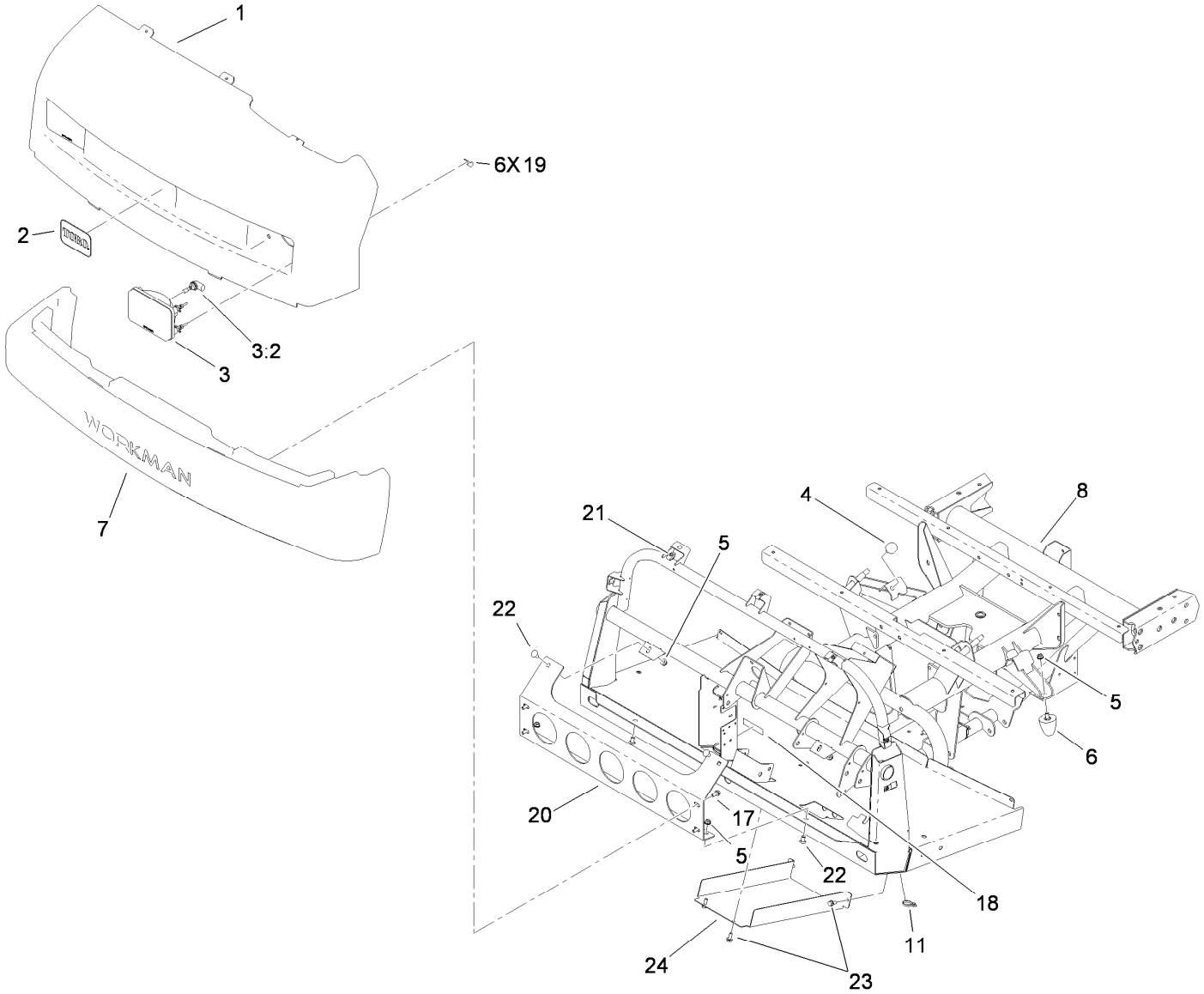


# Hood and Bumper Assembly

| Ref. | Part Number | Qty. | Description |
|---|---|---|---|
| 1 | 112-3183 | 1 | Hood |
| 2 | 117-4950 | 1 | Decal |
| 3 | 114-8322 | 2 | Headlight ASM |
| 3:2 | 115-2395 | 1 | Bulb-Light |
| 4 | 87-2440 | 2 | Bumper-Rubber |
| 5 | 3290-357 | 6 | Nut-HHF, Whiz |
| 6 | 26-0071 | 2 | Snubber-Rubber |
| 7 | 112-3185 | 1 | Bumper |
| 8 | 114-8270-03 | 1 | Operator Frame ASM |

| Ref. | Part Number | Qty. | Description |
|---|---|---|---|
| 11 | 3290-379 | 1 | Tie-Cable |
| 17 | 3234-5 | 4 | Screw-HHF |
| 18 | 117-2718 | 1 | Decal-Arrester, Spark |
| 19 | 114-8341 | 6 | Clip |
| 20 | 114-8272-03 | 1 | Bracket-Bumper |
| 21 | 94-2413 | 7 | Nut-U |
| 22 | 3231-21 | 4 | Screw-CARR |
| 23 | 32144-11 | 4 | Screw-HWHTF |
| 24 | 106-2427-03 | 1 | Cover |

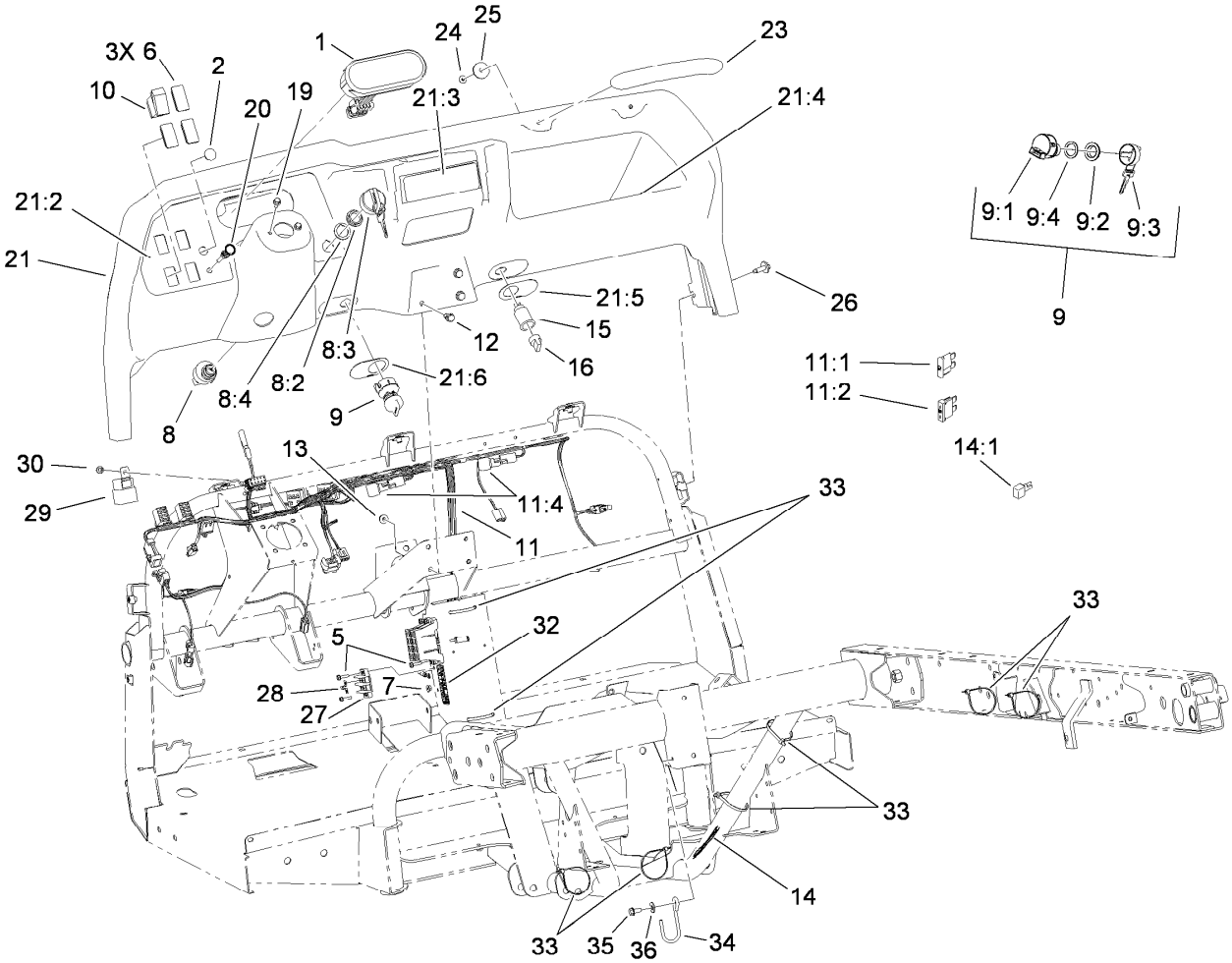


# Dash Assembly

| Ref. | Part Number | Qty. | Description |
|---|---|---|---|
| 1 | 114-8300 | 1 | Cluster-Instrument |
| 2 | 94-5627 | 1 | Plug |
| 5 | 32105-13 | 6 | Screw-HWH |
| 6 | 99-7420 | 3 | Plug-Hole |
| 7 | 3290-148 | 6 | Nut-HF |
| 8 | 106-5269 | 1 | Ignition Switch ASM |
| 8:2 | 108-8660 | 1 | Nut-Mounting |
| 8:3 | 106-5270 | 1 | Ignition Key Set |
| 8:4 | 108-8659 | 1 | Washer-Backup |
| 9 | 110-2580 | 1 | Switch-Key, Supervisor |
| 9:1 | | 1 | Switch-Key ● |
| 9:2 | 108-8660 | 1 | Nut-Mounting |
| 9:3 | 110-5221 | 1 | Set-Key, Supervisor |
| 9:4 | 108-8659 | 1 | Washer-Backup |
| 10 | 95-8999 | 1 | Switch |
| 11 | 117-4998 | 1 | Harness-Wire, Front |
| 11:1 | 218-578 | 5 | Fuse-Blade, 10 Amp |
| 11:2 | 109355 | 2 | Fuse-Blade, 15 Amp |
| 11:4 | 100-4918 | 2 | Diode |
| 12 | 3234-5 | 3 | Screw-HHF |
| 13 | 104-8300 | 3 | Nut-HF, NI |
| 14 | 114-8380 | 1 | Harness-Wire, Rear |
| 14:1 | 100-4918 | 1 | Diode |

| Ref. | Part Number | Qty. | Description |
|---|---|---|---|
| 15 | 99-7411 | 1 | Point-Power |
| 16 | 99-7416 | 1 | Cap |
| 19 | 33103-012 | 2 | Screw-HHF |
| 20 | 106-7943 | 1 | Cable-Control, Choke |
| 21 | 115-7912 | 1 | Dash ASM |
| 21:2 | 115-2281 | 1 | Decal-Dash |
| 21:3 | 115-7746 | 1 | Decal-Danger |
| 21:4 | 115-2282 | 1 | Decal-Warning, Dash |
| 21:5 | 106-2353 | 1 | Decal-Powerpoint |
| 21:6 | 106-2355 | 1 | Decal-Switch, Supervisor |
| 23 | 117-4948 | 1 | Handle-Grab |
| 24 | 104-7201 | 2 | Nut-HF |
| 25 | 103995 | 2 | Washer |
| 26 | 114-8418 | 7 | Screw-HWH, Sems |
| 27 | 42862 | 1 | Block-Terminal, Ground |
| 28 | 42863 | 1 | Strip-Jumper |
| 29 | 99-7430 | 1 | Relay |
| 30 | 32144-10 | 1 | Screw-HWH |
| 32 | 115-7813 | 1 | Decal-Fuse |
| 33 | 3290-379 | 8 | Tie-Cable |
| 34 | 117-4860 | 1 | Guide-Cable |
| 35 | 32144-11 | 1 | Screw-HWHTF |
| 36 | 3256-71 | 1 | Washer-Flat |

● Not serviced separately

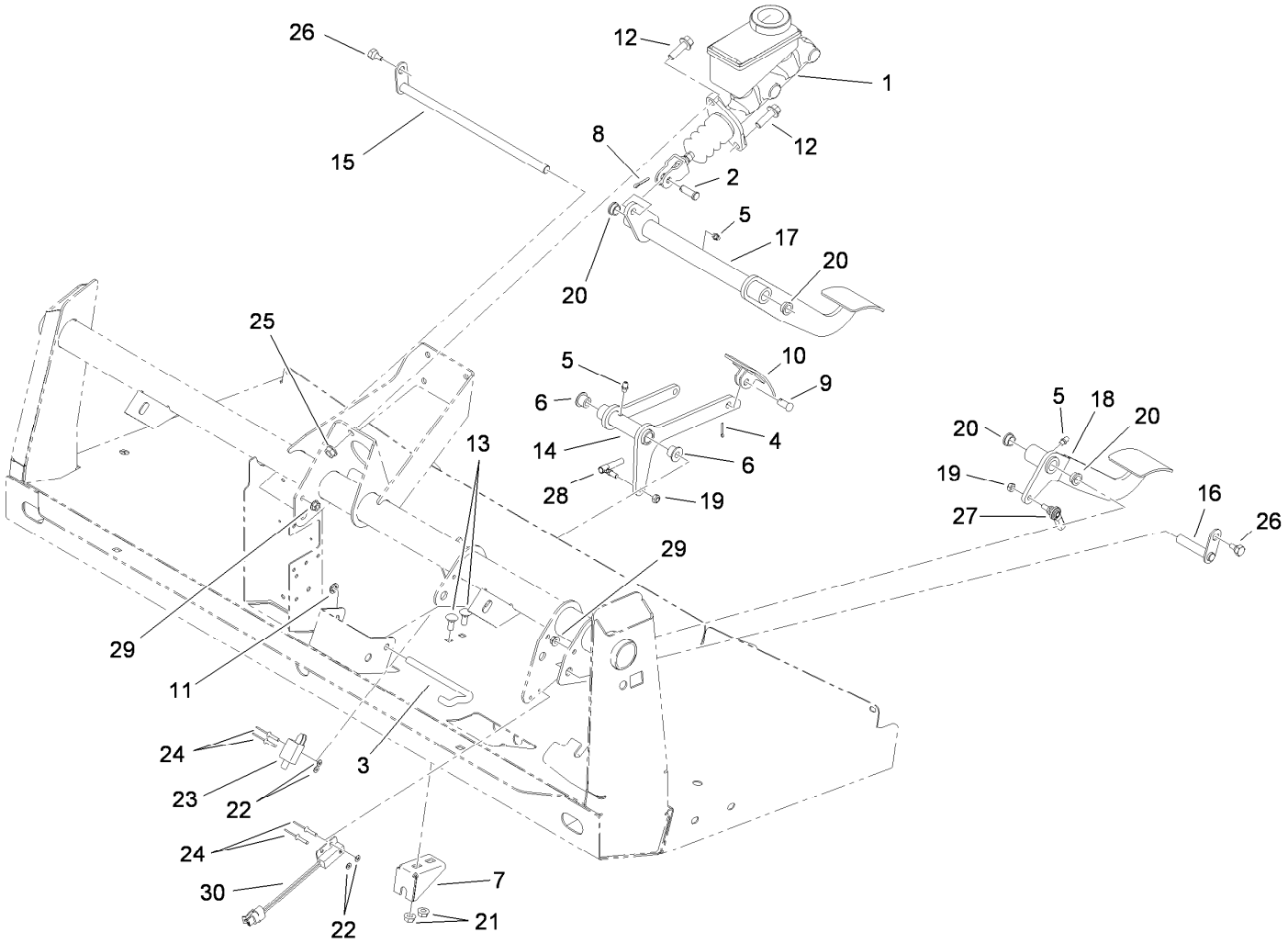


# Pedal Assembly

| Ref. | Part Number | Qty. | Description |
|---|---|---|---|
| 1 | 104-6782 | 1 | Master Cylinder ASM |
| 2 | 283-2 | 1 | Pin-Clevis |
| 3 | 87-2880 | 1 | Shaft-Pedal, Accelerator |
| 4 | 3272-6 | 1 | Pin-Cotter |
| 5 | 302-5 | 3 | Fitting-Grease |
| 6 | 256-259 | 2 | Bushing-Flange |
| 7 | 106-2421 | 1 | Bracket-Mount, Cable |
| 8 | 3272-10 | 1 | Pin-Cotter |
| 9 | 283-85 | 1 | Pin-Clevis |
| 10 | 93-8969-03 | 1 | Pedal |
| 11 | 32151-56 | 1 | Ring-Retaining, External |
| 12 | 3234-11 | 2 | Screw-HHF |
| 13 | 3230-1 | 2 | Bolt-CARR |
| 14 | 106-2471-03 | 1 | Arm-Pedal, Accelerator |
| 15 | 106-2475 | 1 | Shaft-Brake |

| Ref. | Part Number | Qty. | Description |
|---|---|---|---|
| 16 | 115-2269 | 1 | Pin-Pivot |
| 17 | 115-2275-03 | 1 | Pedal-Brake |
| 18 | 115-2271-03 | 1 | Pedal-Clutch |
| 19 | 3296-13 | 2 | Nut-Lock, NI |
| 20 | 256-156 | 4 | Bushing-Flange |
| 21 | 32128-20 | 2 | Nut-HF |
| 22 | 3256-21 | 4 | Washer-Flat |
| 23 | 95-1653 | 1 | Switch-Pole, Single |
| 24 | 3269-25 | 4 | Rivet-Pop |
| 25 | 3290-357 | 2 | Nut-HHF, Whiz |
| 26 | 63-3410 | 2 | Screw-Shoulder |
| 27 | 110-2554 | 1 | Rod End-Spherical |
| 28 | 18-1720 | 1 | Ball Joint |
| 29 | 32128-33 | 2 | Nut-HF |
| 30 | 105-0023 | 1 | Switch-Proximity |

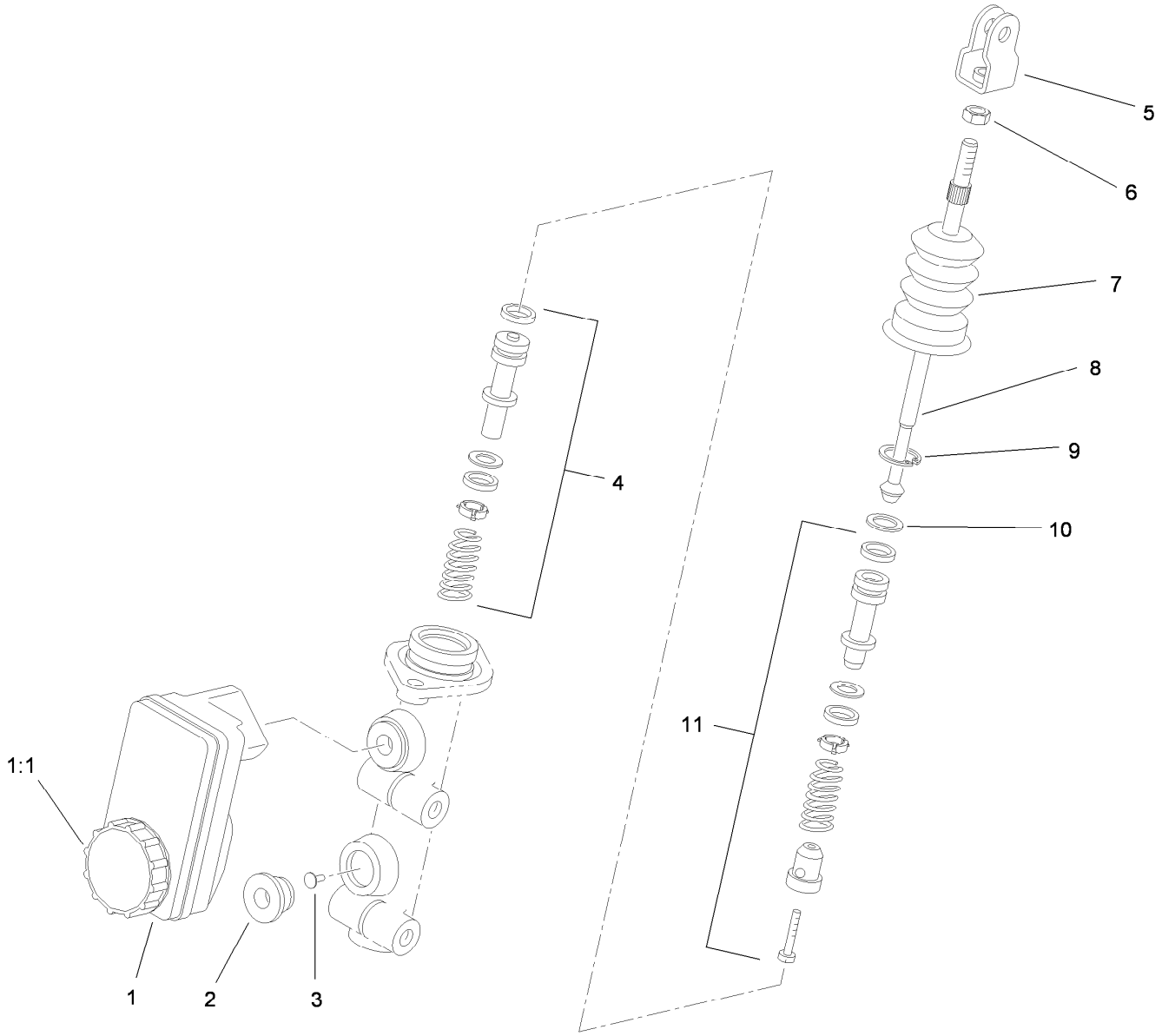


# Master Cylinder Assembly No. 104-6782

| *Ref.* | *Part Number* | *Qty.* | *Description* |
|---|---|---|---|
| 1 | 104-6845 | 1 | Reservoir ASM |
| 1:1 | 92-4112 | 1 | Cap ASM |
| 2 | 93-8971 | 2 | Seal-Port, Flange |
| 3 | 92-4103 | 1 | Pin-Stop |
| 4 | 92-4102 | 1 | Secondary Piston ASM |
| 5 | 92-4110 | 1 | Clevis |
| 6 | 21-0360 | 1 | Nut-Hex |
| 7 | 94-5209 | 1 | Cover-Dust |
| 8 | 94-5210 | 1 | Rod-Push |
| 9 | 92-4109 | 1 | Ring-Snap |
| 10 | 92-4108 | 1 | Retainer-Washer |
| 11 | 92-4101 | 1 | Primary Piston ASM |

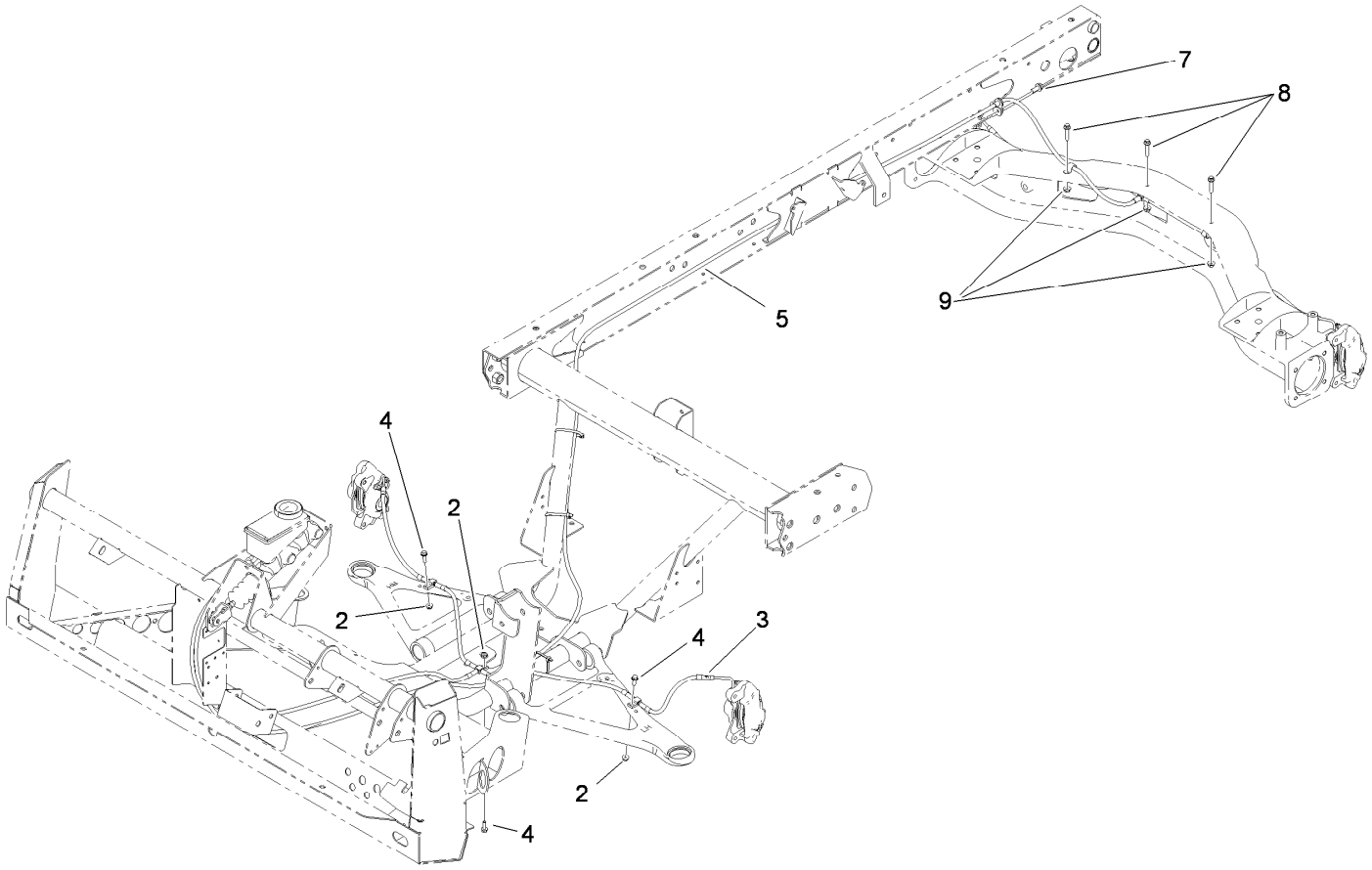


# Hydraulic Brake Line Assembly

| *Ref.* | *Part Number* | *Qty.* | *Description* |
|---|---|---|---|
| 2 | 104-7201 | 3 | Nut-HF |
| 3 | 115-2263 | 1 | Line-Brake, Front |
| 4 | 321-6 | 3 | Screw-HH |
| 5 | 115-2264 | 1 | Line-Brake, Rear |
| 7 | 32144-11 | 1 | Screw-HWHTF |
| 8 | 3234-21 | 3 | Screw-HHF |
| 9 | 32128-33 | 3 | Nut-HF |

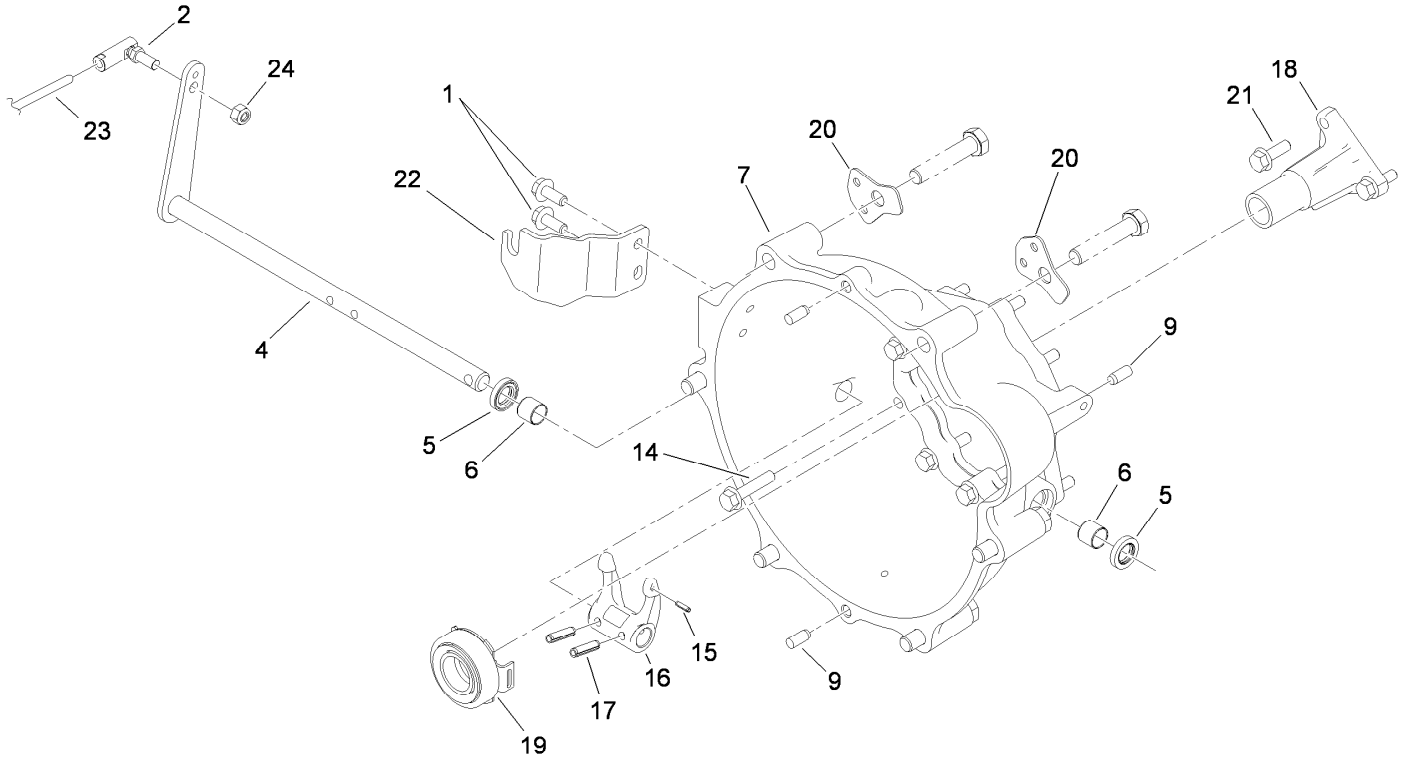


# Clutch Linkage Assembly

| Ref. | Part Number | Qty. | Description |
|---|---|---|---|
| 1 | 98-7977 | 2 | Screw-HHF |
| 2 | 2411-33 | 1 | Balljoint-RH (W/Grommet) |
| 4 | 115-2311 | 1 | Lever-Clutch |
| 5 | 87-1920 | 2 | Seal-Oil |
| 6 | 87-3770 | 2 | Bushing-Housing, Bell |
| 7 | 104-9249 | 1 | Housing-Bell |
| 9 | 87-1910 | 4 | Pin-Dowel |
| 14 | 33104-040 | 9 | Screw-HHF |
| 15 | 32121-7 | 1 | Pin-Roll, Slotted |
| 16 | 87-5300 | 1 | Fork-Clutch |
| 17 | 32121-24 | 2 | Pin-Spring |
| 18 | 115-2259 | 1 | Guide-Release |
| 19 | 110-2538 | 1 | Bearing-Release, Clutch |
| 20 | 115-2247 | 2 | Bracket-Harness |
| 21 | 33104-025 | 3 | Screw-HHF |
| 22 | 115-2313 | 1 | Bracket-Cable, Clutch |
| 23 | 115-2284 | 1 | Cable-Clutch |
| 24 | 3296-4 | 1 | Nut-Lock |

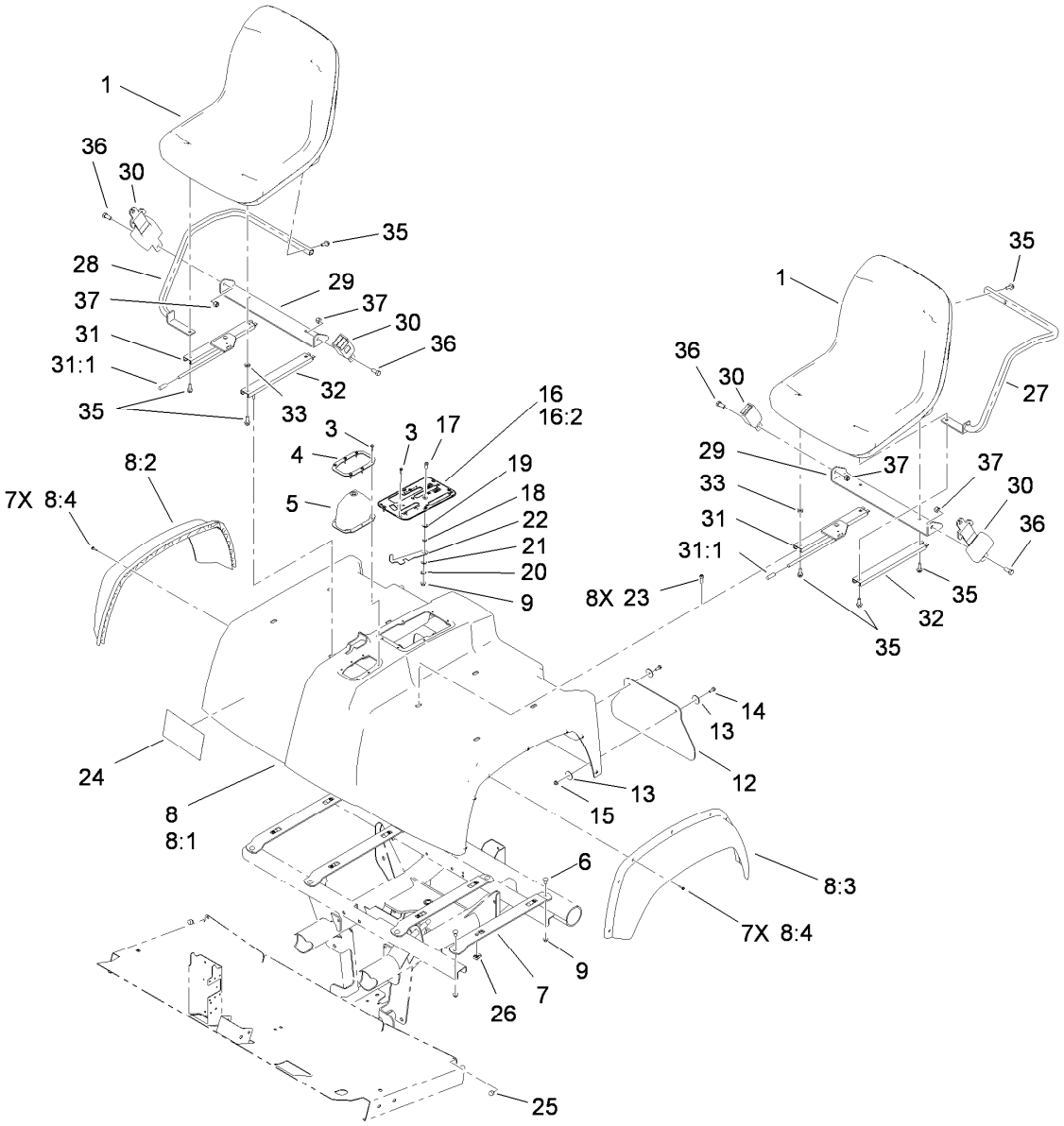


# Shroud and Seat Assembly

| Ref. | Part Number | Qty. | Description |
|---|---|---|---|
| 1 | 112-2923 | 2 | Seat ASM |
| 3 | 98-1375 | 12 | Screw-HWH |
| 4 | 87-3760-03 | 1 | Plate-Boot, Shift |
| 5 | 87-8620 | 1 | Boot-Shift |
| 6 | 3230-1 | 8 | Bolt-CARR |
| 7 | 115-2435-03 | 4 | Bracket-Seat |
| 8 | | 1 | Seat Base ASM ● |
| 8:1 | 114-8406 | 1 | Base-Seat |
| 8:2 | 114-8407 | 1 | Fender-Front, RH |
| 8:3 | 114-8408 | 1 | Fender-Front, LH |
| 8:4 | 117-5036 | 14 | Screw-HWH |
| 9 | 104-8300 | 9 | Nut-HF, NI |
| 12 | 106-2378 | 2 | Mudflap |
| 13 | 3256-55 | 8 | Washer-Flat |
| 14 | 3234-4 | 4 | Screw-HHF |
| 15 | 104-7201 | 4 | Nut-HF |
| 16 | 106-7886 | 1 | Control Plate ASM |
| 16:2 | 106-2377 | 1 | Decal-Console |

| Ref. | Part Number | Qty. | Description |
|---|---|---|---|
| 17 | 3274-55 | 1 | Screw-HSBH |
| 18 | 82-4240 | 1 | Spacer-Bearing |
| 19 | 94-8196 | 1 | Washer-Nylon |
| 20 | 3290-221 | 1 | Washer-Spring |
| 21 | 3256-23 | 1 | Washer-Plain |
| 22 | 106-7984 | 1 | Lever-Detent |
| 23 | 3274-22 | 8 | Screw-HSH |
| 24 | 115-7814 | 1 | Decal-Reference, Quick |
| 25 | 107-8042 | 2 | Bumper-Rubber |
| 26 | 115-7721 | 8 | Nut-Clip, U |
| 27 | 119-0731-03 | 1 | Armrest-LH |
| 28 | 119-0732-03 | 1 | Armrest-RH |
| 29 | 119-0727-03 | 2 | Bracket-Belt, Seat |
| 30 | 110-0413 | 2 | Seatbelt-Retractable |
| 31 | 119-0654 | 2 | Adjuster-Seat, Locking |
| 31:1 | 2410-49 | 1 | Cap-Vinyl |
| 32 | 119-0655 | 2 | Adjuster-Seat, Non Locking |
| 33 | 104-7658 | 2 | Spacer |

● Not serviced separately

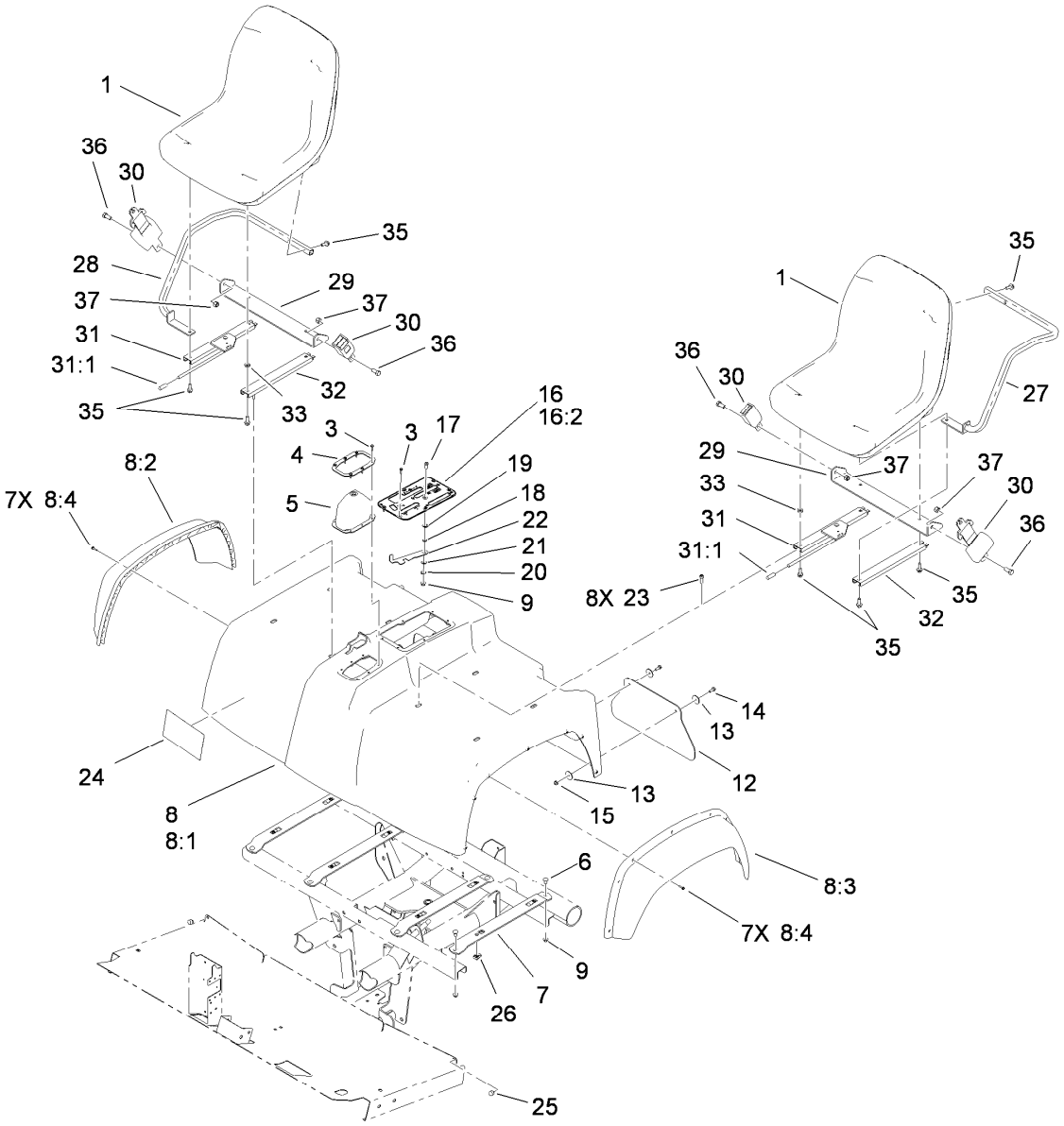


# Shroud and Seat Assembly (continued)

| Ref. | Part Number | Qty. | Description |
|---|---|---|---|
| 35 | 3234-29 | 12 | Screw-HHF |

| Ref. | Part Number | Qty. | Description |
|---|---|---|---|
| 36 | 3212-4 | 4 | Screw-HH |
| 37 | 3296-7 | 4 | Nut-Lock |

● Not serviced separately

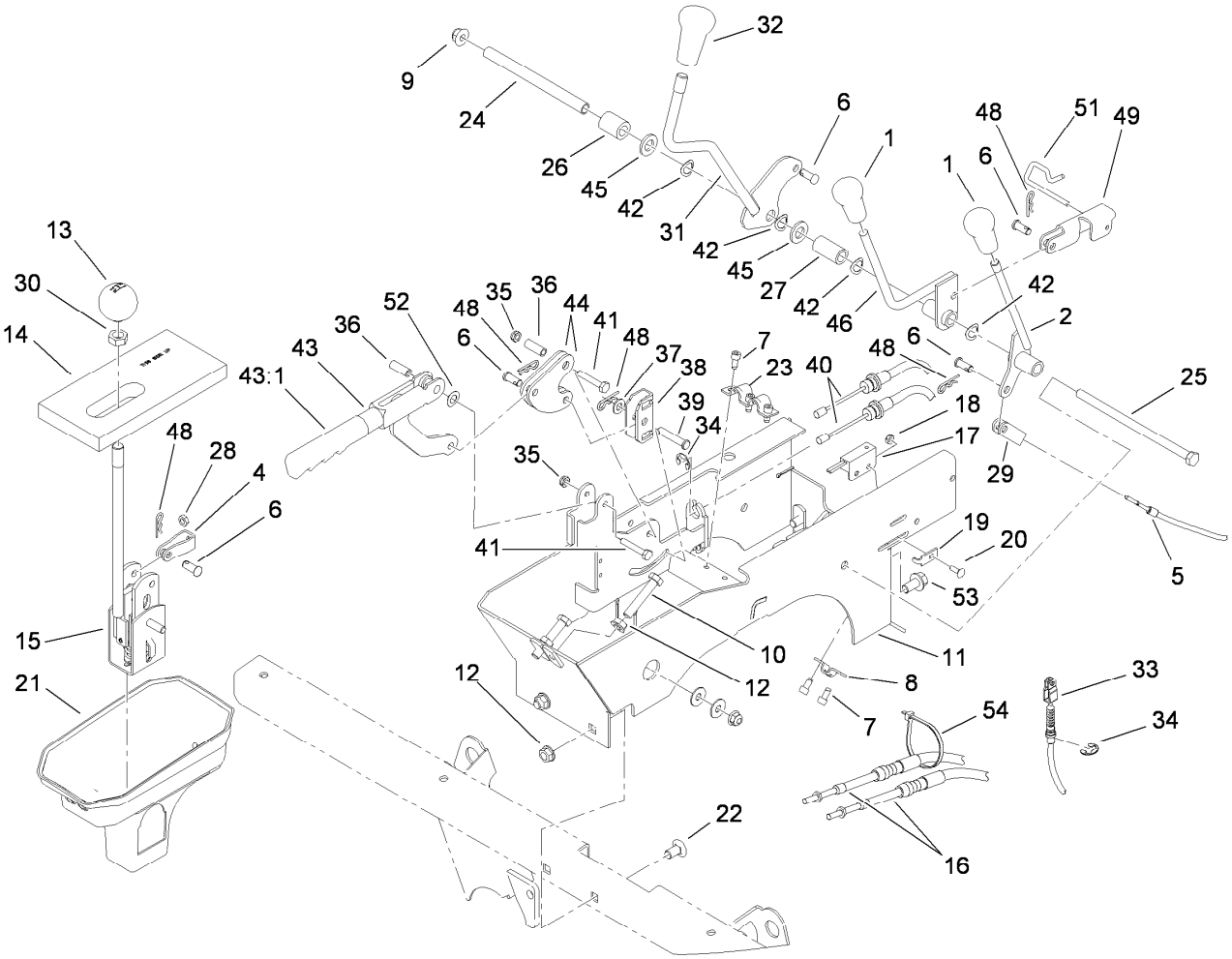


# Console Assembly

| Ref. | Part Number | Qty. | Description |
|---|---|---|---|
| 1 | 106-7903 | 2 | Knob-Control |
| 2 | 106-7828 | 1 | Lever |
| 4 | 87-2310 | 2 | Clevis-Cable |
| 5 | 115-7812 | 1 | Cable-Hi Low |
| 6 | 283-62 | 6 | Pin-Clevis |
| 7 | 65-5220 | 5 | Screw-HSH, Thread Forming |
| 8 | 87-4340 | 1 | Clamp-Cable |
| 9 | 104-8301 | 1 | Nut-HF, NI |
| 10 | 323-10 | 2 | Screw-HH |
| 11 | 108-6914-03 | 1 | Support-Lever |
| 12 | 3290-357 | 4 | Nut-HHF, Whiz |
| 13 | 87-6720 | 1 | Knob-Shift |
| 14 | 87-6570 | 1 | Seal-Boot, Lower |
| 15 | 106-7887 | 1 | Shift ASM |
| 16 | 115-7811 | 2 | Cable-Selector, Gear |
| 17 | 100-1270 | 1 | Switch-Proximity |
| 18 | 3296-12 | 1 | Nut-Lock, NI |
| 19 | 100-4872 | 1 | Plate-Switch, Neutral |
| 20 | 3229-34 | 1 | Screw-CARR |
| 21 | 106-2376 | 1 | Boot-Shift, Lower |
| 22 | 3231-21 | 2 | Screw-CARR |
| 23 | 87-4960 | 1 | Clamp-Cable |
| 24 | 106-7833 | 1 | Spacer |
| 25 | 323-36 | 1 | Screw-HH |
| 26 | 66-6501 | 1 | Spacer-Wheel |
| 27 | 106-7835 | 1 | Spacer |
| 28 | 3220-1 | 2 | Nut-Jam |
| 29 | 87-7160 | 1 | Clevis-Cable |
| 30 | 3218-18 | 1 | Nut-Jam |
| 31 | 112-3008 | 1 | Lever-Lock, Differential |
| 32 | 106-7952 | 1 | Knob |
| 33 | 115-2287 | 1 | Cable-Lock, Differential |
| 34 | 32120-47 | 3 | Ring-Retaining, External |
| 35 | 3296-56 | 2 | Nut-Lock, NI |
| 36 | 114402 | 2 | Spacer |
| 37 | 3256-23 | 1 | Washer-Plain |
| 38 | 87-3480 | 1 | Bracket-Equalizer, Cable |
| 39 | 94-3829 | 1 | Pin-Clevis |
| 40 | 115-2283 | 2 | Cable-Brake, Park |
| 41 | 321-9 | 2 | Screw-HH |
| 42 | 3290-221 | 4 | Washer-Spring |
| 43 | 104-6842 | 1 | Lever-Brake, Park |
| 43:1 | 106-7972 | 1 | Grip-Handle |
| 44 | 106-7814 | 2 | Bellcrank |
| 45 | 33096-00 | 2 | Washer-Flat |
| 46 | 106-7960 | 1 | Lever-HYD |
| 48 | 3290-307 | 7 | Pin-Cotter |
| 49 | 115-2250 | 1 | Link |
| 51 | 115-2350 | 1 | Pin-Retainer |
| 52 | 3290-477 | 1 | Washer-Curved |
| 53 | 3234-12 | 2 | Screw-HHF |
| 54 | 3290-379 | 3 | Tie-Cable |

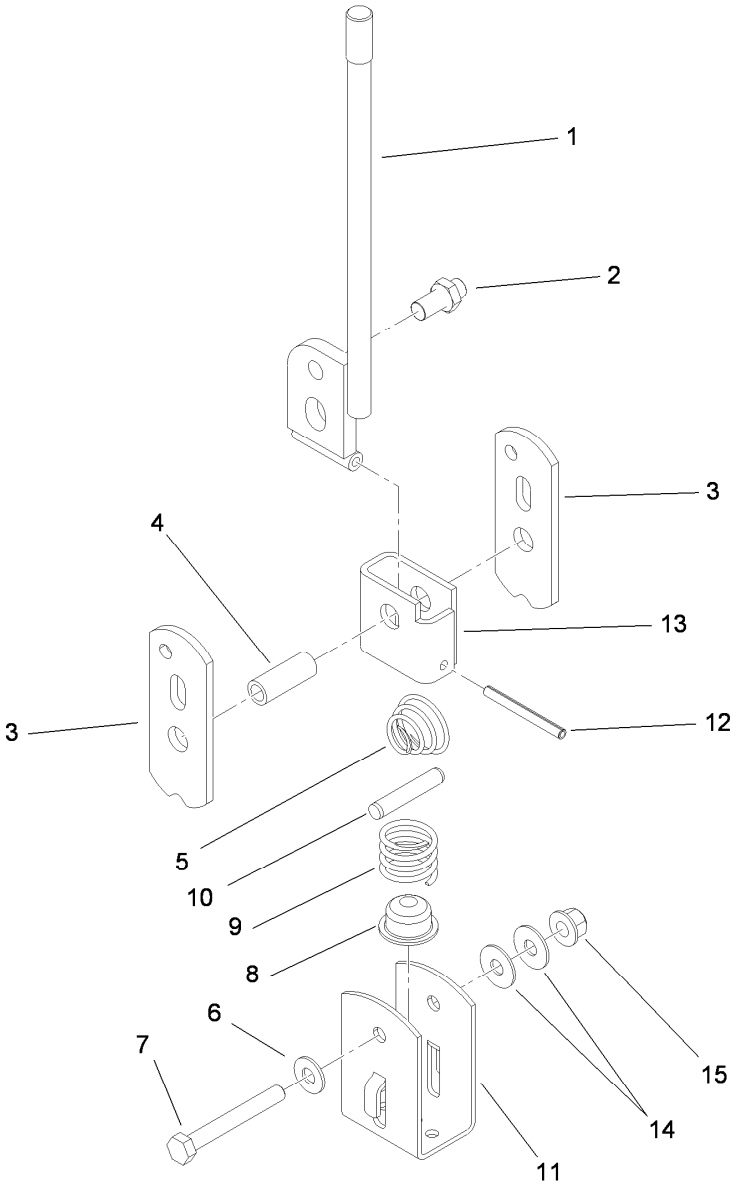


# Shift Assembly No. 106-7887

| Ref. | Part Number | Qty. | Description |
|---|---|---|---|
| 1 | 87-2040 | 1 | Lever-Shift |
| 2 | 87-3650 | 1 | Pin-Shift |
| 3 | 87-3540 | 2 | Link-Shift |
| 4 | 87-2520 | 1 | Tube-Pivot |
| 5 | 87-2900 | 1 | Spring-Compression |
| 6 | 87-8640 | 1 | Washer-Flat |
| 7 | 322-12 | 1 | Screw-HH |
| 8 | 87-3530 | 1 | Button-Shifter |
| 9 | 87-3660 | 1 | Spring-Compression |
| 10 | 3290-507 | 1 | Pin-Dowel |
| 11 | 87-3520 | 1 | Clevis |
| 12 | 32121-48 | 1 | Pin-Spring |
| 13 | 87-6040 | 1 | Bracket-Shifter |
| 14 | 3290-456 | 2 | Washer-Belleville |
| 15 | 104-8300 | 1 | Nut-HF, NI |

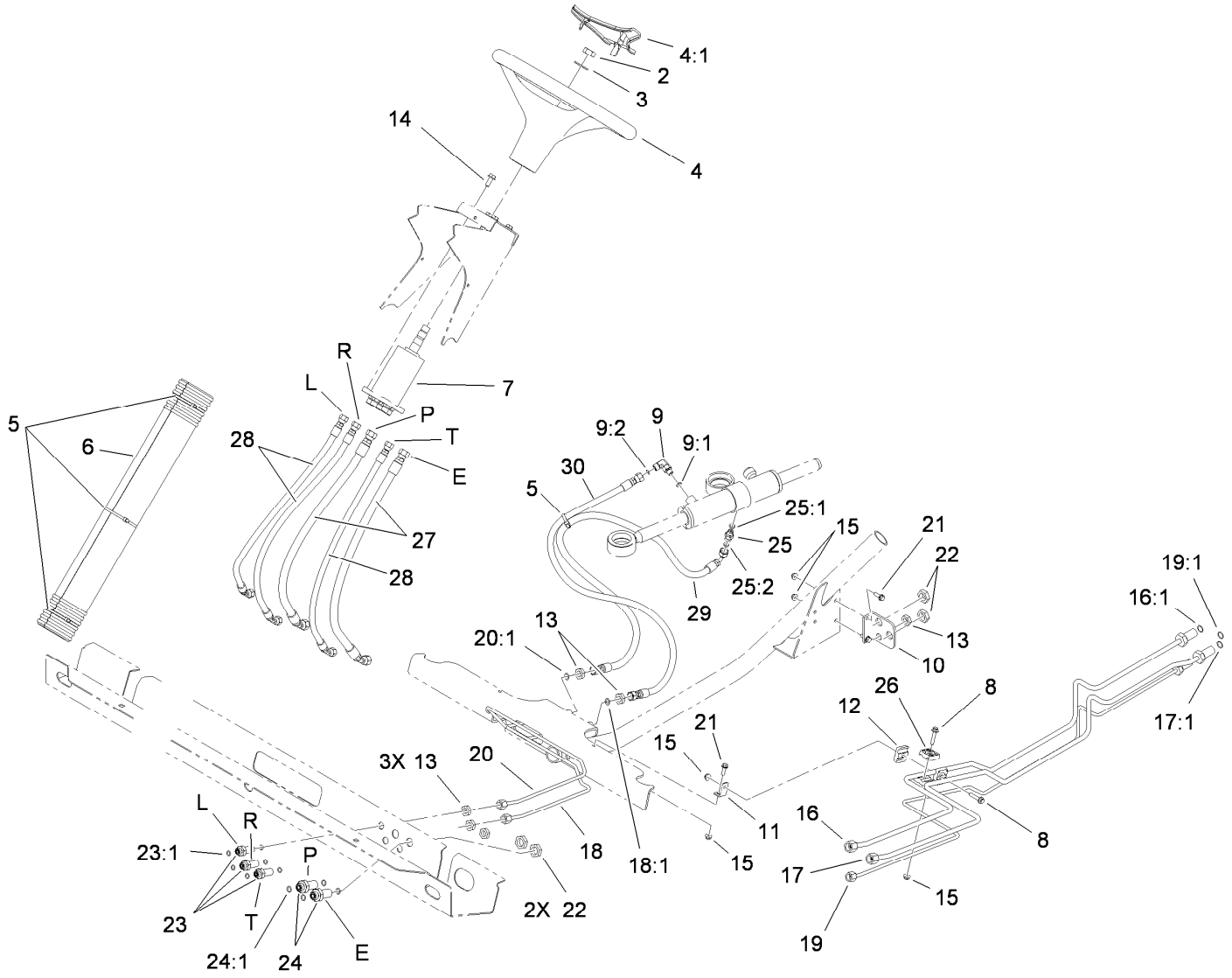


# Steering Hydraulic Assembly

| Ref. | Part Number | Qty. | Description |
|---|---|---|---|
| 2 | 3296-33 | 1 | Nut-Lock, NI |
| 3 | 3256-27 | 1 | Washer-Flat |
| 4 | 98-1471 | 1 | Wheel-Steering |
| 4:1 | 98-1468 | 1 | Cover-Wheel, Steering |
| 5 | 3290-379 | 4 | Tie-Cable |
| 6 | 106-6713 | 1 | Cover-Lines, Steering |
| 7 | 115-7926 | 1 | Pump-Steering |
| 8 | 3234-21 | 2 | Screw-HHF |
| 9 | 340-132 | 1 | Fitting-90 DEG |
| 9:1 | 237-78 | 1 | O-Ring |
| 9:2 | 237-21 | 1 | O-Ring |
| 10 | 106-7801-03 | 1 | Bracket-Line, Steering |
| 11 | 106-7807 | 1 | Bracket-Line, Steering |
| 12 | 106-7839 | 2 | Clamp-Tube |
| 13 | 340-78 | 6 | Nut-Lock |
| 14 | 98-7977 | 4 | Screw-HHF |
| 15 | 104-7201 | 5 | Nut-HF |
| 16 | 115-7701 | 1 | Tube-HYD |
| 16:1 | 237-22 | 1 | O-Ring |
| 17 | 115-7702 | 1 | Tube-HYD |
| 17:1 | 237-22 | 1 | O-Ring |

| Ref. | Part Number | Qty. | Description |
|---|---|---|---|
| 18 | 106-7804 | 1 | Tube-HYD |
| 18:1 | 237-21 | 1 | O-Ring |
| 19 | 115-7703 | 1 | Tube-HYD |
| 19:1 | 237-21 | 1 | O-Ring |
| 20 | 106-7806 | 1 | Tube-HYD |
| 20:1 | 237-21 | 1 | O-Ring |
| 21 | 3234-4 | 3 | Screw-HHF |
| 22 | 340-70 | 4 | Nut-Lock |
| 23 | 94-1444 | 3 | Union-Bulkhead |
| 23:1 | 237-21 | 2 | O-Ring |
| 24 | 340-71 | 2 | Fitting-Straight, Bulkhead |
| 24:1 | 237-22 | 2 | O-Ring |
| 25 | 340-92 | 1 | Fitting-Straight |
| 25:1 | 237-78 | 1 | O-Ring |
| 25:2 | 237-21 | 1 | O-Ring |
| 26 | 56-7973 | 2 | Clamp-Tube |
| 27 | 106-7975 | 2 | Hose-HYD |
| 28 | 106-7974 | 3 | Hose-HYD |
| 29 | 117-4861 | 1 | Hose-HYD |
| 30 | 108-6505 | 1 | Hose ASM |

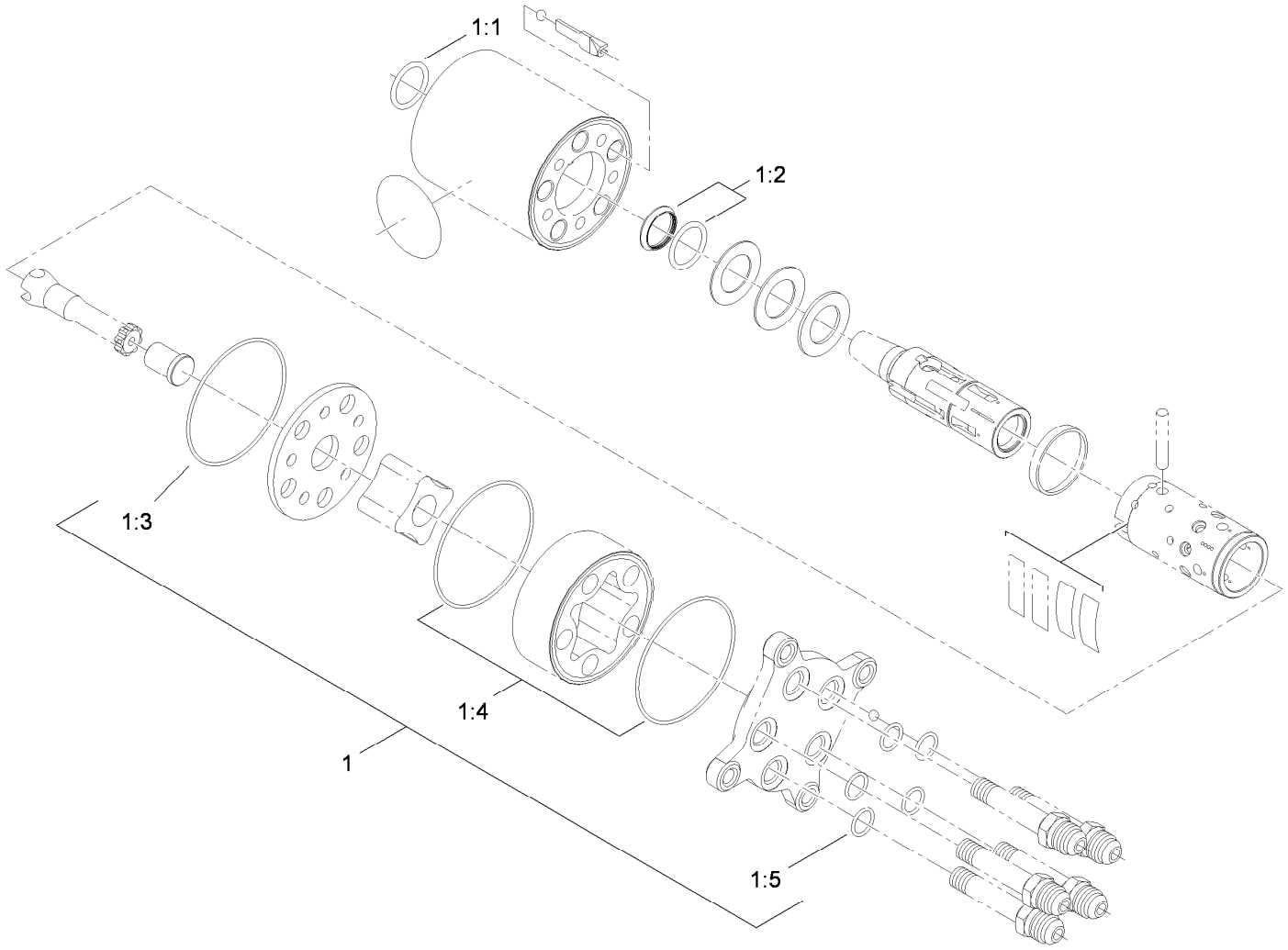


# Steering Valve Assembly No. 115-7926

| *Ref.* | *Part Number* | *Qty.* | *Description* |
|---|---|---|---|
| 1 | 106-6716 | 1 | Seal Kit |
| 1:1 | | 1 | Ring-Seal, Dust ● |
| 1:2 | | 1 | Seal-Shaft ● |
| 1:3 | | 1 | Ring-Retaining ● |
| 1:4 | | 2 | Ring-Retaining ● |
| 1:5 | | 5 | Ring-Retaining ● |

● Not serviced separately

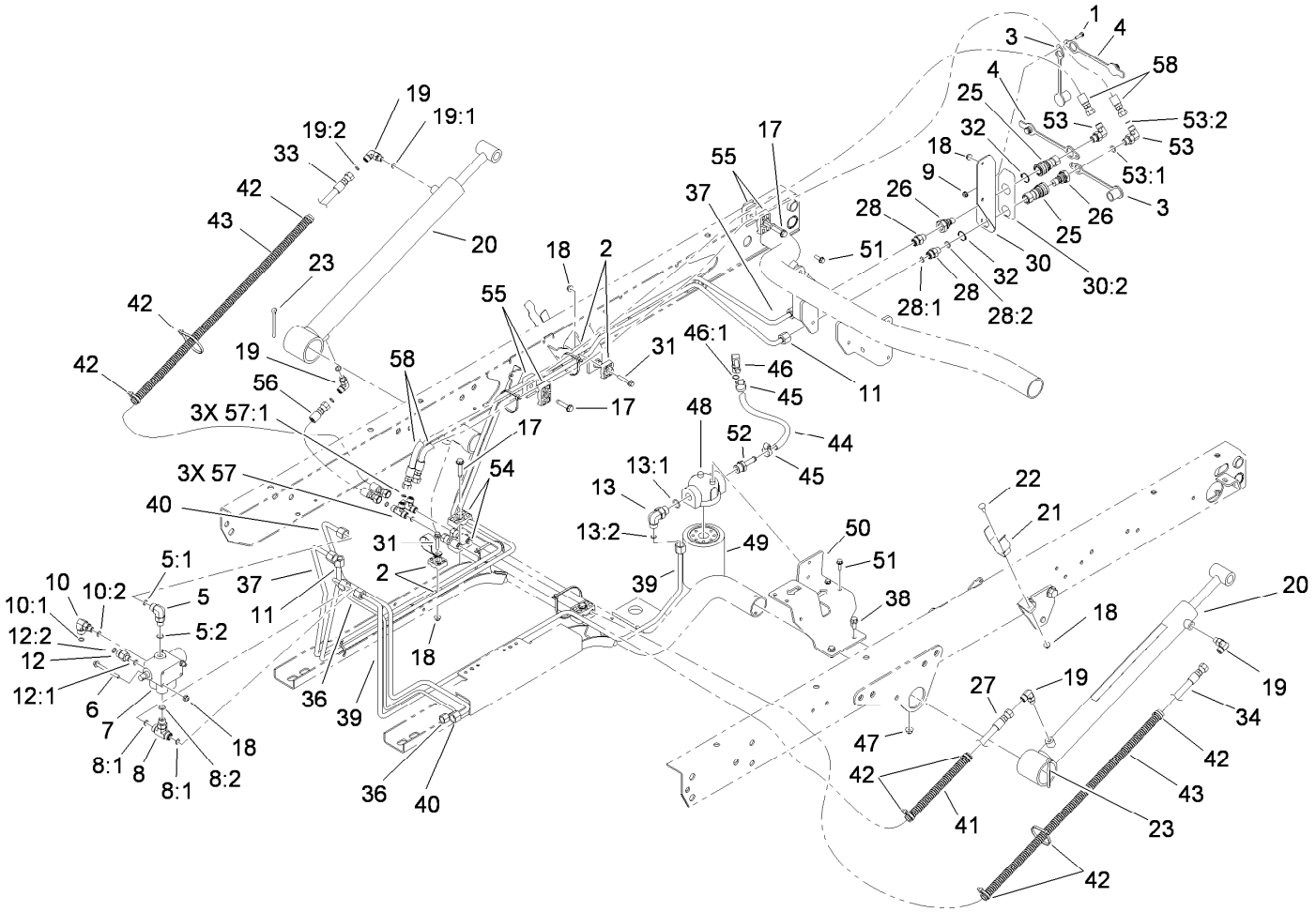


# Lift Valve and Hydraulics Assembly

| Ref. | Part Number | Qty. | Description |
|---|---|---|---|
| 1 | 32105-13 | 1 | Screw-HWH |
| 2 | 56-7973 | 4 | Clamp-Tube |
| 3 | 106-7881 | 2 | Cap-Dust, HYD |
| 4 | 106-7882 | 2 | Plug-Dust, HYD |
| 5 | 340-77 | 1 | Fitting-Elbow-90 |
| 5:1 | 237-22 | 1 | O-Ring |
| 5:2 | 237-42 | 1 | O-Ring |
| 6 | 114-8410 | 2 | Screw-HHF |
| 7 | 43-1950 | 1 | HYD Control Valve ASM |
| 8 | 340-94 | 1 | Adapter |
| 8:1 | 237-22 | 2 | O-Ring |
| 8:2 | 237-42 | 1 | O-Ring |
| 9 | 3290-148 | 1 | Nut-HF |
| 10 | 340-97 | 1 | Fitting-Elbow 90 |
| 10:1 | 237-22 | 1 | O-Ring |
| 10:2 | 237-78 | 1 | O-Ring |
| 11 | 115-2218 | 1 | Tube-HYD |
| 12 | 340-88 | 1 | Fitting-Str |
| 12:1 | 237-22 | 1 | O-Ring |
| 12:2 | 237-78 | 1 | O-Ring |
| 13 | 340-18 | 1 | Fitting-HYD, 90 DEG |

| Ref. | Part Number | Qty. | Description |
|---|---|---|---|
| 13:1 | 237-79 | 1 | O-Ring |
| 13:2 | 237-22 | 1 | O-Ring |
| 17 | 32144-57 | 4 | Screw |
| 18 | 104-7201 | 8 | Nut-HF |
| 19 | 340-132 | 4 | Fitting-90 DEG |
| 19:1 | 237-78 | 1 | O-Ring |
| 19:2 | 237-21 | 1 | O-Ring |
| 20 | 106-7939 | 2 | HYD Cylinder ASM |
| 21 | 108-3109 | 2 | Retainer-Cylinder |
| 22 | 3229-1 | 2 | Bolt-CARR |
| 23 | 3272-37 | 2 | Pin-Cotter |
| 25 | 106-7968 | 2 | Coupler-Quick, Female |
| 26 | 106-7969 | 2 | Coupler-Quick, Male |
| 27 | 115-7711 | 1 | HYD Hose ASM |
| 28 | 340-2 | 2 | Fitting-Straight |
| 28:1 | 237-22 | 1 | O-Ring |
| 28:2 | 237-42 | 1 | O-Ring |
| 30 | 115-7715 | 1 | Coupler Bracket ASM |
| 30:2 | 115-7723 | 1 | Decal-Disconnect, Quick |
| 31 | 94-5781 | 2 | Screw-HHF |
| 32 | 32151-83 | 2 | Ring-Snap |

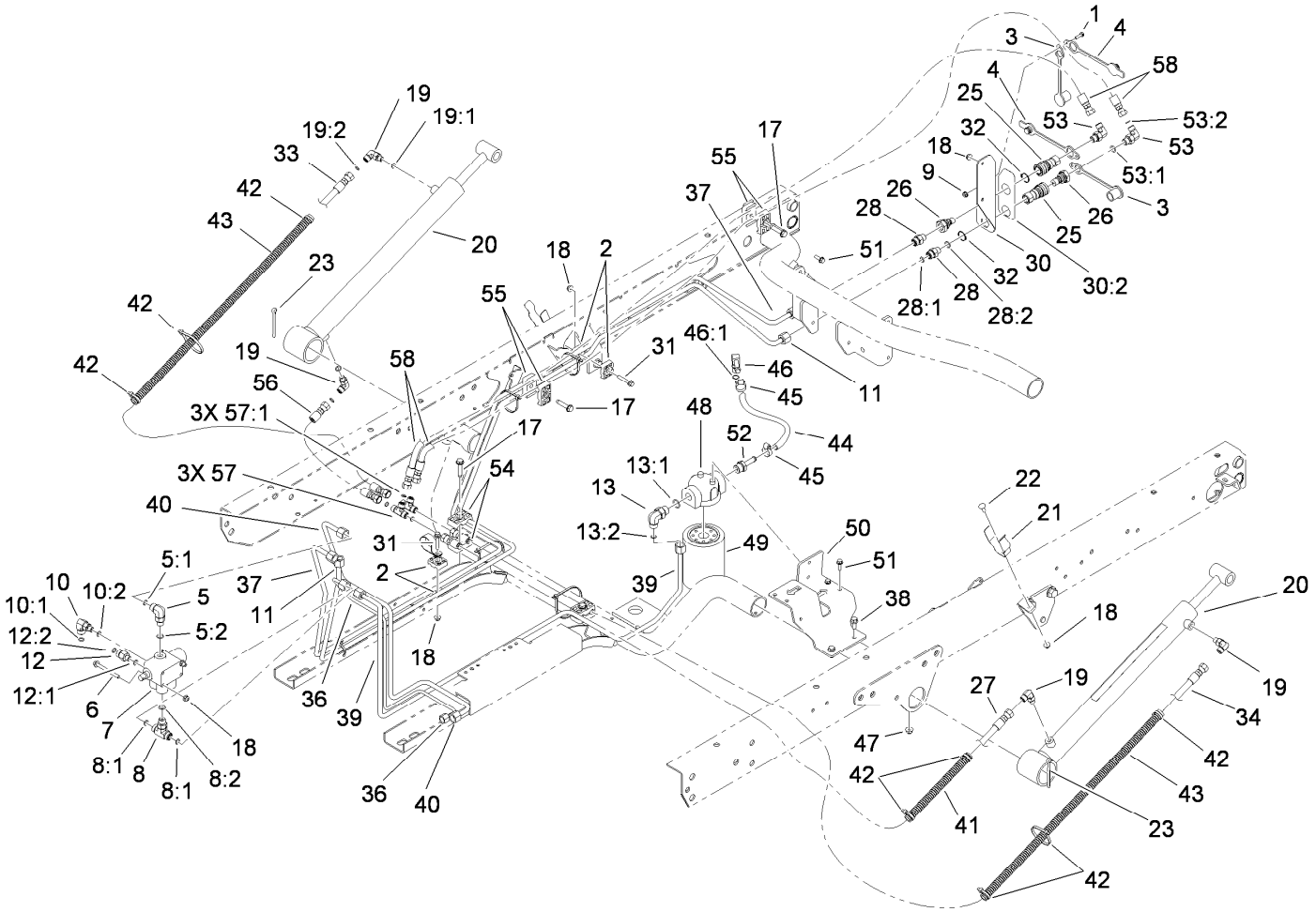


# Lift Valve and Hydraulics Assembly (continued)

| Ref. | Part Number | Qty. | Description |
|---|---|---|---|
| 33 | 108-6508 | 1 | Hose-HYD |
| 34 | 104-3716 | 1 | HYD Hose ASM |
| 36 | 115-2216 | 1 | Tube-HYD |
| 37 | 115-2217 | 1 | Tube-HYD |
| 38 | 3234-5 | 2 | Screw-HHF |
| 39 | 115-2224 | 1 | Tube-HYD |
| 40 | 115-2223 | 1 | Tube-HYD |
| 41 | 24-7922 | 1 | Conduit-Convoluted, Split |
| 42 | 3290-379 | 8 | Tie-Cable |
| 43 | 24-7923 | 2 | Conduit-Convoluted, Split |
| 44 | 115-2228 | 1 | HYD Hose ASM |
| 45 | 2412-36 | 2 | Clamp-Hose |
| 46 | 100-4887 | 1 | Fitting-Barbed |
| 46:1 | 237-42 | 1 | O-Ring |
| 47 | 104-8300 | 2 | Nut-HF, NI |

| Ref. | Part Number | Qty. | Description |
|---|---|---|---|
| 48 | 87-8780 | 1 | Head-Filter |
| 49 | 54-0110 | 1 | Filter-Oil, Transmission |
| 50 | 115-2168-03 | 1 | Bracket-Filter |
| 51 | 3234-4 | 4 | Screw-HHF |
| 52 | 115-2231 | 1 | Fitting-Straight |
| 53 | 340-82 | 2 | Fitting-Elbow 90 |
| 53:1 | 237-42 | 1 | O-Ring |
| 53:2 | 237-21 | 1 | O-Ring |
| 54 | 56-7971 | 2 | Clamp-Tube |
| 55 | 56-7976 | 6 | Clamp-Tube |
| 56 | 110-0931 | 1 | Hose-HYD |
| 57 | 340-21 | 2 | Fitting |
| 57:1 | 237-21 | 3 | O-Ring |
| 58 | 106-3680 | 2 | Hose-HYD |

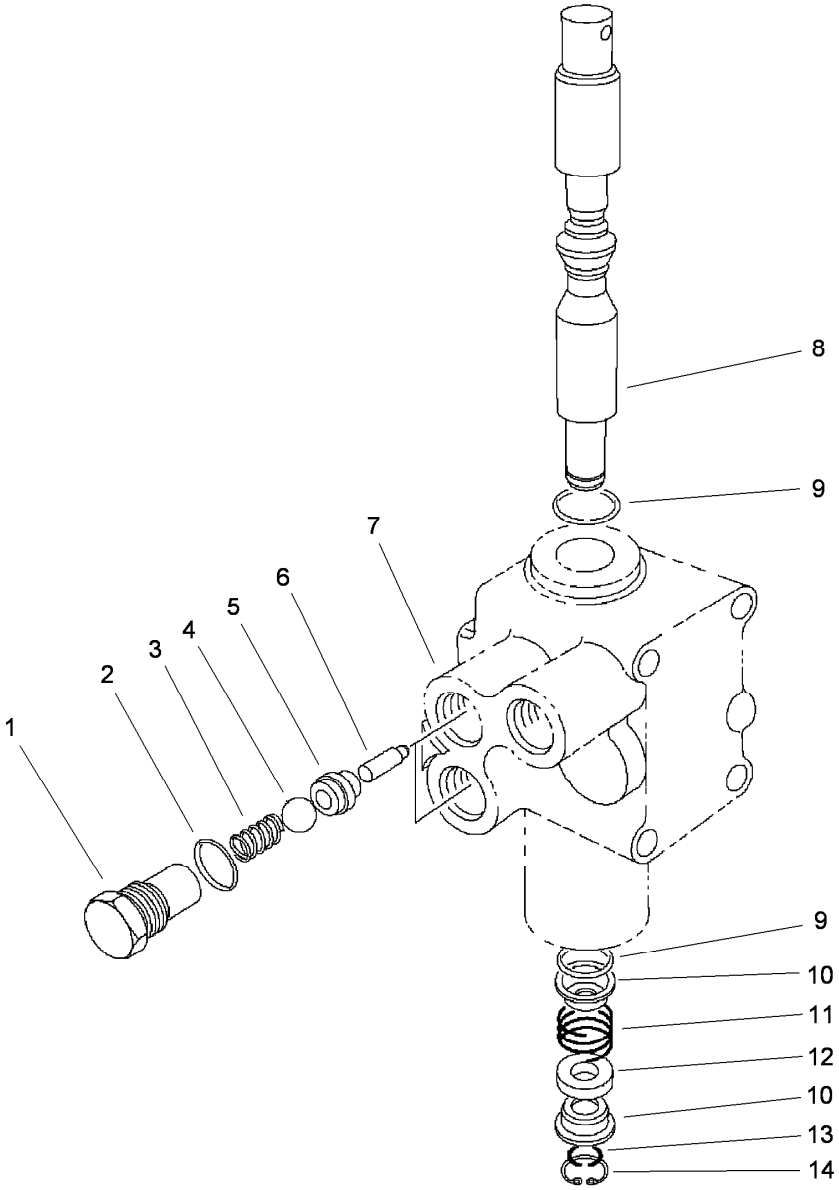


# Control Valve Assembly No. 43-1950

| Ref. | Part Number | Qty. | Description |
|---|---|---|---|
| 1 | 22-8330 | 2 | Plug |
| 2 | 237-42 | 2 | O-Ring |
| 3 | 22-8340 | 2 | Spring |
| 4 | 22-8350 | 2 | Ball |
| 5 | 22-8370 | 2 | Seat-Valve |
| 6 | 22-8360 | 2 | Pin |
| 7 | | 1 | Body ● |
| 8 | 22-8420 | 1 | Spool |
| 9 | 22-8500 | 2 | O-Ring |
| 10 | 22-8380 | 2 | Retainer |
| 11 | 22-8410 | 1 | Spring |
| 12 | 23-3030 | 1 | Spacer |
| 13 | 22-8480 | 1 | Ring-Snap |
| 14 | 22-8490 | 1 | Ring-Snap |

● Not serviced separately

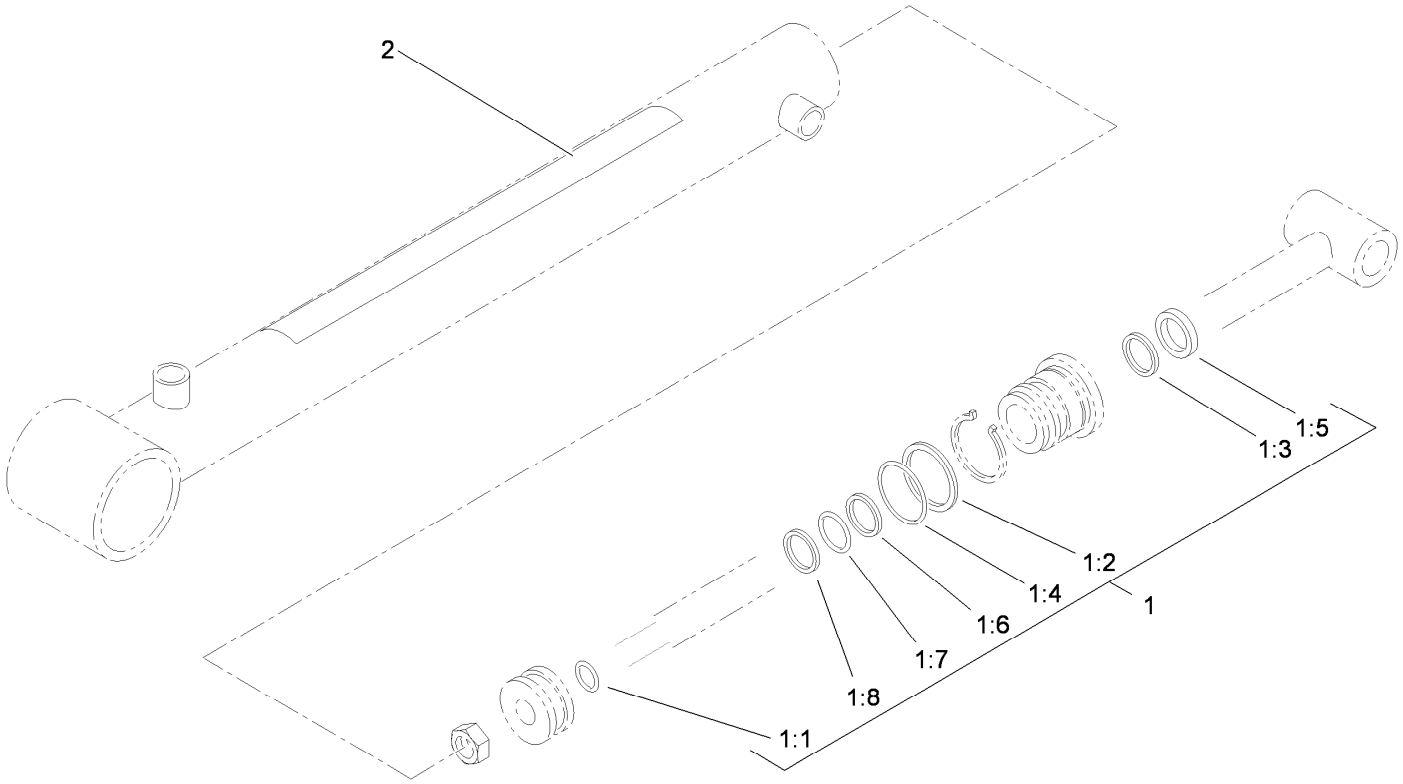


# Hydraulic Cylinder Assembly No. 106-7939

| *Ref.* | *Part Number* | *Qty.* | *Description* |
|---|---|---|---|
| 1 | 106-7941 | 1 | Seal Kit |
| 1:1 | | 1 | Ring-Retaining ● |
| 1:2 | | 1 | Ring-Retaining ● |
| 1:3 | | 1 | Seal ● |
| 1:4 | | 1 | Back-Up ● |
| 1:5 | | 1 | Wiper ● |
| 1:6 | | 1 | Seal ● |
| 1:7 | | 1 | Ring-Retaining ● |
| 1:8 | | 1 | Ring-Wear ● |
| 2 | 93-9852 | 1 | Decal-Warning |

● Not serviced separately

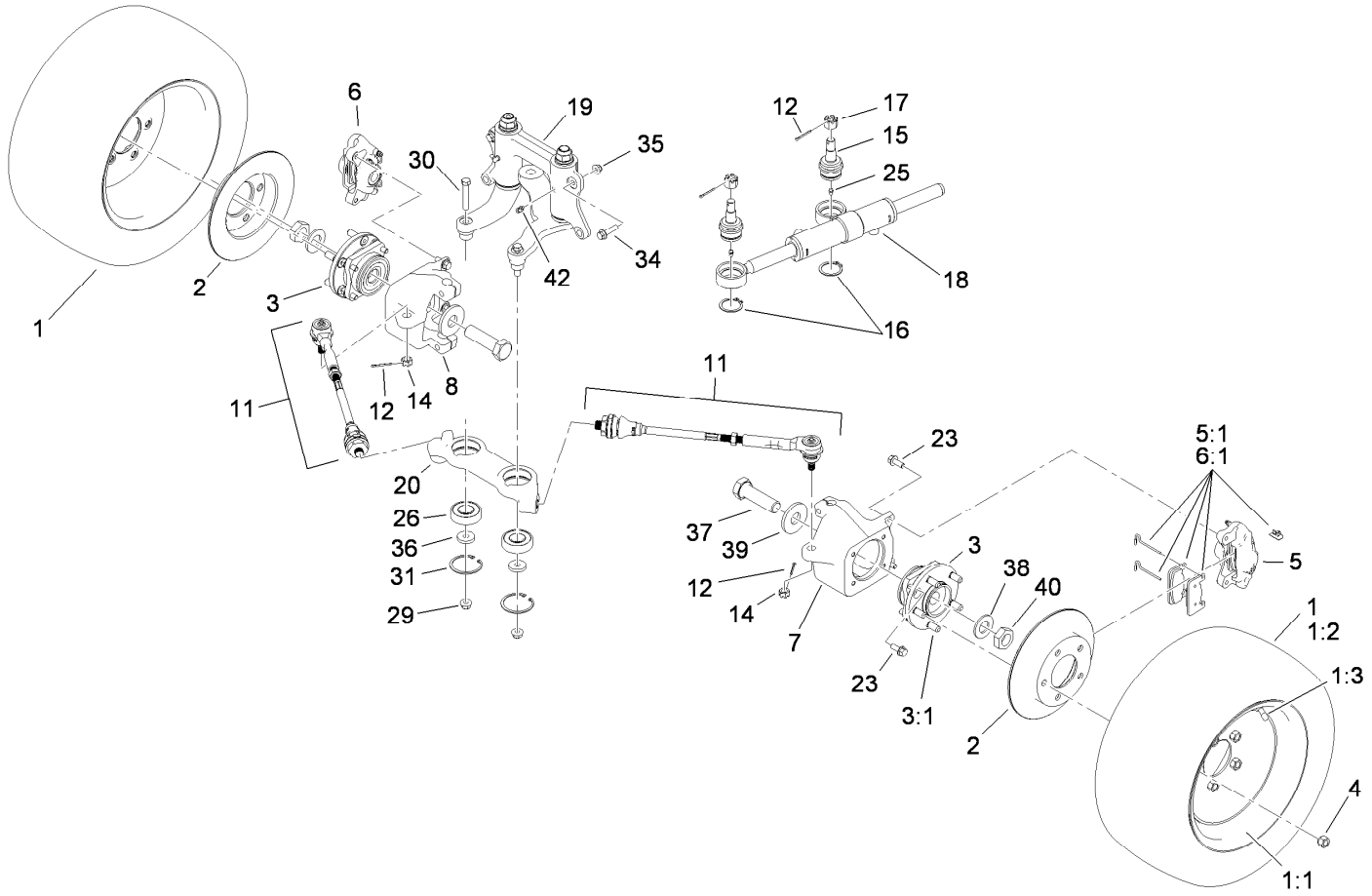


# Front Wheel Assembly

| Ref. | Part Number | Qty. | Description |
|---|---|---|---|
| 1 | | 2 | Tire And Wheel ASM ● |
| 1:1 | 115-2245 | 1 | Wheel |
| 1:2 | 114-8273 | 1 | Tire |
| 1:3 | 232-27 | 1 | Stem-Valve |
| 2 | 114-8351 | 2 | Rotor-Brake |
| 3 | 112-3214 | 2 | Wheel Hub ASM |
| 3:1 | 114-8299 | 5 | Stud-Wheel |
| 4 | 242-50 | 10 | Nut-Lug |
| 5 | 114-8359 | 1 | Caliper-LH |
| 5:1 | 115-7846 | 1 | Brake Pad Kit (T108) |
| 6 | 114-8360 | 1 | Caliper-RH |
| 6:1 | 115-7846 | 1 | Brake Pad Kit (T108) |
| 7 | 114-8292 | 1 | Knuckle-LH |
| 8 | 114-8294 | 1 | Knuckle-RH |
| 11 | 114-8356 | 2 | Tie Rod ASM |
| 12 | 3272-12 | 4 | Pin-Cotter |
| 14 | 32136-3 | 2 | Nut-SHH |
| 15 | 106-6774 | 2 | Joint-Ball |
| 16 | 32151-104 | 2 | Ring-Retaining, External |
| 17 | 32136-14 | 2 | Nut-Hst |
| 18 | 112-3217 | 1 | HYD Cylinder ASM |
| 19 | | 1 | Steering Linkage ASM ● |
| 20 | 114-8296 | 1 | Link-Center |
| 23 | 3234-11 | 12 | Screw-HHF |
| 25 | 302-5 | 2 | Fitting-Grease |
| 26 | 115-2161 | 2 | Bearing-Ball |
| 29 | 114-8417 | 2 | Nut-HF, NI |
| 30 | 324-10 | 2 | Screw-HH |
| 31 | 32120-22 | 2 | Ring-Snap, Internal |
| 34 | 114-4681 | 2 | Screw-HHF |
| 35 | 104-8301 | 2 | Nut-HF, NI |
| 36 | 112843 | 2 | Washer |
| 37 | 115-2173 | 2 | Screw-HH |
| 38 | 3256-62 | 2 | Washer-Flat |
| 39 | 104-0719 | 2 | Washer-Hardened |
| 40 | 3296-49 | 2 | Nut-Lock, NI |
| 42 | 302-60 | 2 | Fitting-Grease |

● Not serviced separately

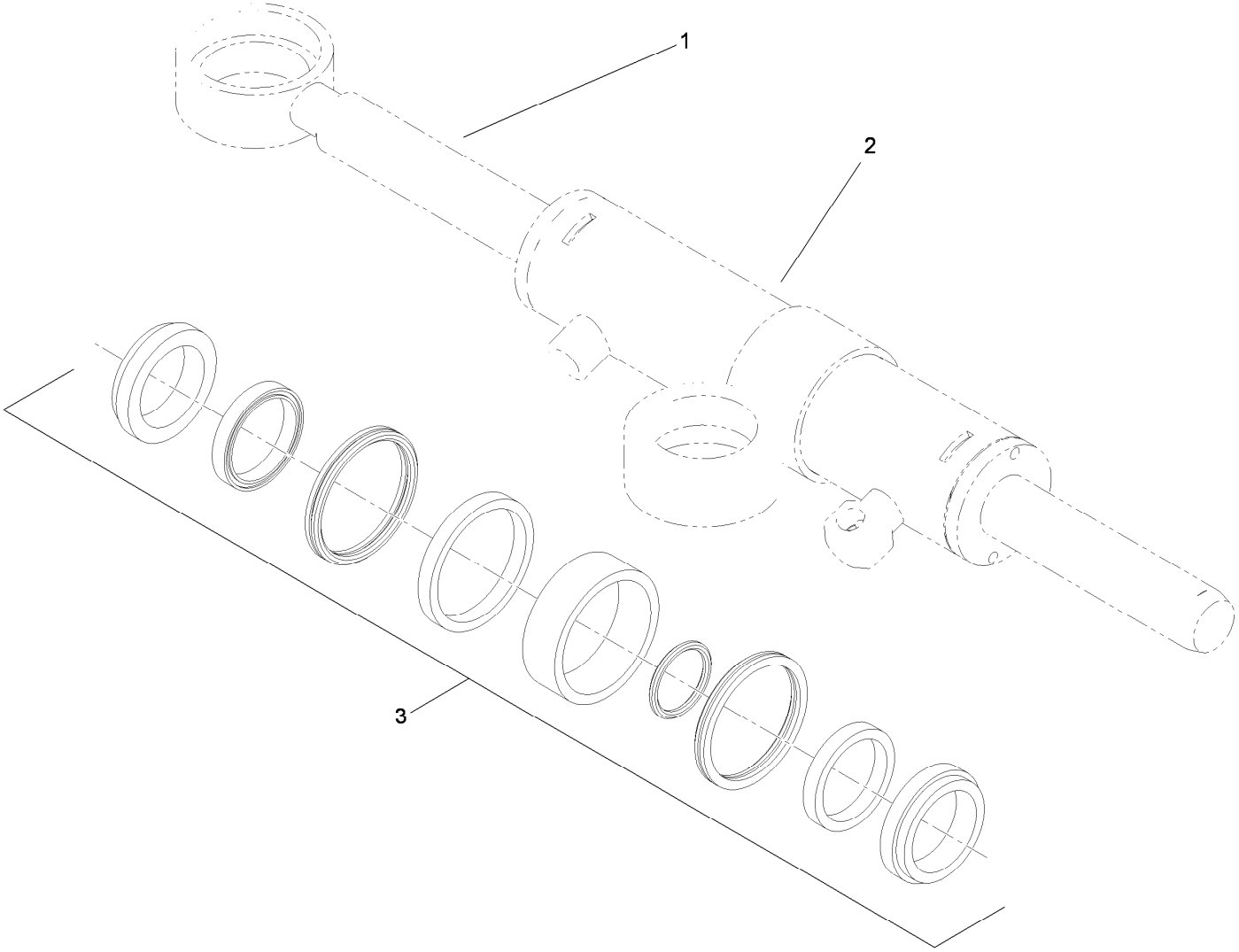


# Hydraulic Cylinder Assembly No. 112-3217

| Ref. | Part Number | Qty. | Description |
|---|---|---|---|
| 1 | | 1 | Rod-Cylinder ● |
| 2 | | 1 | Body-Cylinder ● |
| 3 | 115-2160 | 1 | Cylinder Repair Kit |

● Not serviced separately

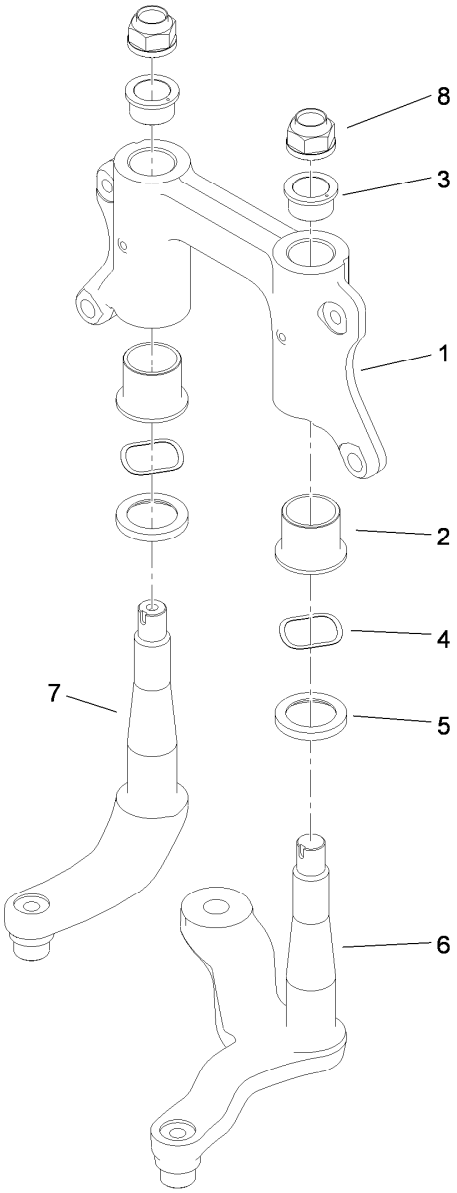


# Steering Linkage Assembly

| *Ref.* | *Part Number* | *Qty.* | *Description* |
|---|---|---|---|
| 1 | 114-8389 | 1 | Mount-Pivot |
| 2 | 69-6470 | 2 | Bushing-Castor |
| 3 | 112-1626 | 2 | Bushing-Flange |
| 4 | 93-4632 | 2 | Washer-Wavey |
| 5 | 86-6560 | 2 | Washer-Thrust |
| 6 | 114-8256 | 1 | Arm-Pitman |
| 7 | 114-8298 | 1 | Arm-Idler |
| 8 | 115-2164 | 2 | Nut-Spindle |

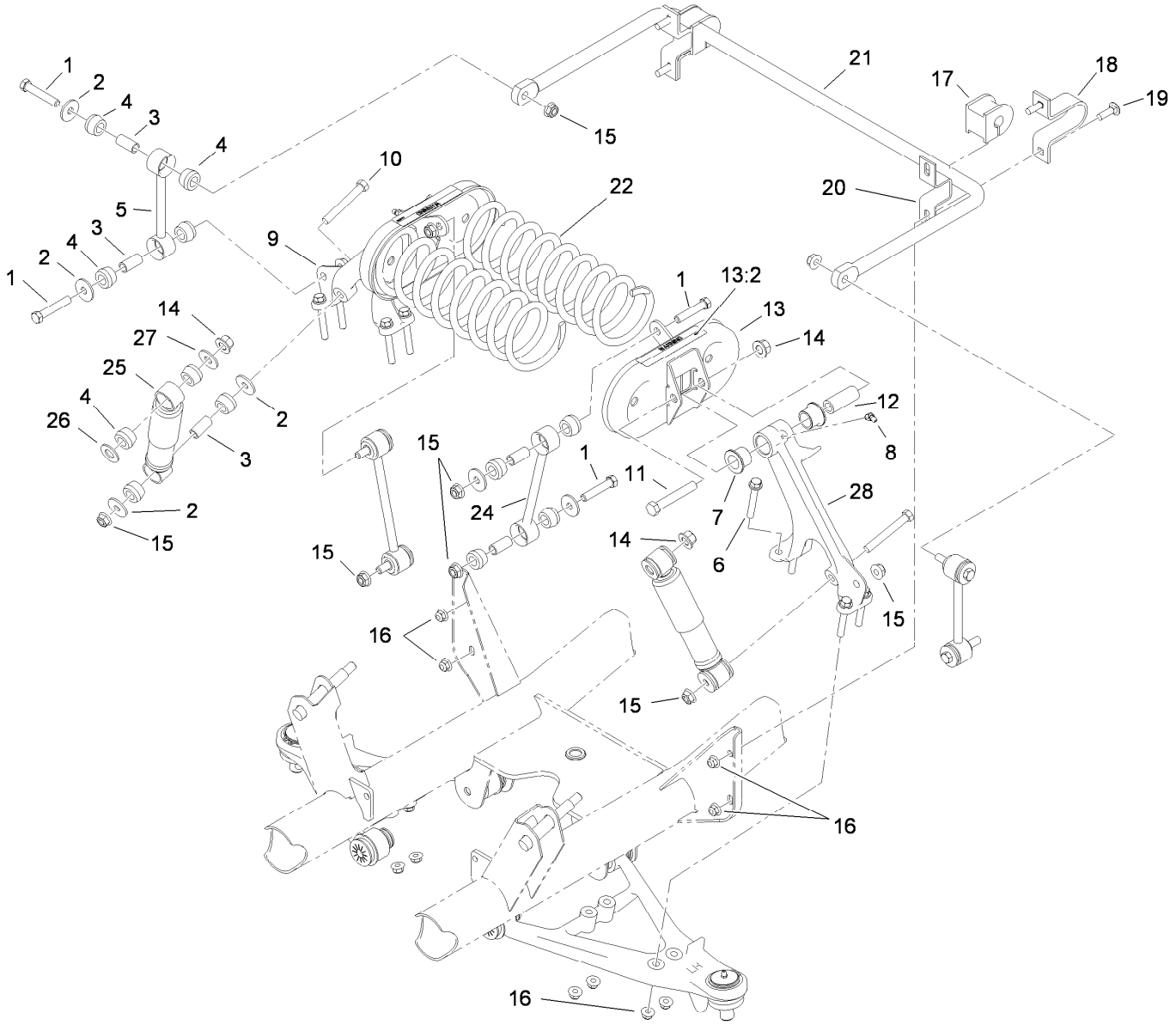


# Front Suspension Assembly

| Ref. | Part Number | Qty. | Description |
|---|---|---|---|
| 1 | 324-10 | 8 | Screw-HH |
| 2 | 87-5330 | 12 | Washer |
| 3 | 87-3600 | 10 | Spacer-Absorber, Shock |
| 4 | 87-3920 | 24 | Bushing |
| 5 | 87-3860-03 | 2 | Link-Sway Bar, Anti |
| 6 | 3234-39 | 8 | Screw-HHF |
| 7 | 33-3090 | 4 | Bushing |
| 8 | 302-11 | 2 | Fitting-Lube, 45 DEG |
| 9 | 87-0150-03 | 1 | Tower-Control Arm, RH |
| 10 | 324-13 | 2 | Screw-HH |
| 11 | 325-13 | 2 | Screw-HH |
| 12 | 87-2500 | 2 | Sleeve-Spring, Pivot |
| 13 | 105-7958 | 2 | Spring Cradle ASM |
| 13:2 | 93-9879 | 1 | Decal-Warning |

| Ref. | Part Number | Qty. | Description |
|---|---|---|---|
| 14 | 99-5107 | 4 | Nut-Lock |
| 15 | 114-8417 | 10 | Nut-HF, NI |
| 16 | 104-8301 | 12 | Nut-HF, NI |
| 17 | 87-3910 | 2 | Bushing-Rubber |
| 18 | 87-4010-03 | 2 | Clamp-Bar, Sway |
| 19 | 3231-25 | 4 | Bolt-CARR |
| 20 | 87-3890-03 | 2 | Bracket-Bar, Sway |
| 21 | 87-3850-03 | 1 | Bar-Sway, Anti |
| 22 | 105-4183-01 | 2 | Spring-Compression |
| 24 | 106-2302-03 | 2 | Link-Stabilizer |
| 25 | 87-3110 | 2 | Absorber-Shock |
| 26 | 3256-27 | 2 | Washer-Flat |
| 27 | 3256-6 | 2 | Washer-Flat |
| 28 | 87-0160-03 | 1 | Tower-Control Arm, LH |

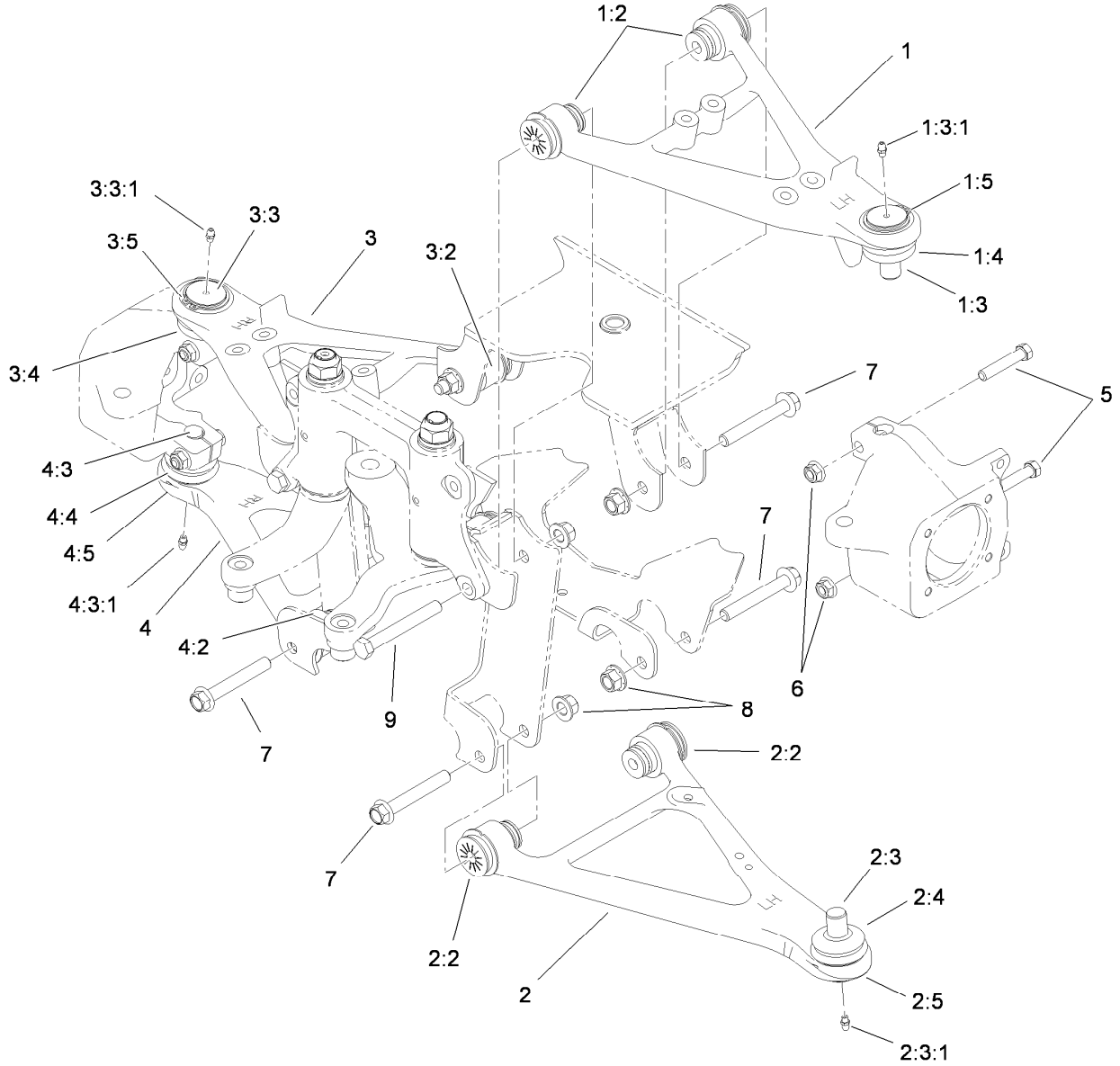


# Front Control Arm Assembly

| Ref. | Part Number | Qty. | Description |
|---|---|---|---|
| 1 | 115-2404 | 1 | Upper LH Control Arm ASM |
| 1:2 | 87-1450 | 2 | Bushing-Flange |
| 1:3 | 115-2165 | 1 | Ball Joint |
| 1:3:1 | 302-5 | 1 | Fitting-Grease |
| 1:4 | 87-2420 | 1 | Seal-Joint, Ball |
| 1:5 | 32151-104 | 1 | Ring-Retaining, External |
| 2 | 115-2405 | 1 | Lower LH Control Arm ASM |
| 2:2 | 87-1450 | 2 | Bushing-Flange |
| 2:3 | 115-2165 | 1 | Ball Joint |
| 2:3:1 | 302-5 | 1 | Fitting-Grease |
| 2:4 | 87-2420 | 1 | Seal-Joint, Ball |
| 2:5 | 32151-104 | 1 | Ring-Retaining, External |
| 3 | 115-2406 | 1 | Upper RH Control Arm ASM |
| 3:2 | 87-1450 | 2 | Bushing-Flange |
| 3:3 | 115-2165 | 1 | Ball Joint |

| Ref. | Part Number | Qty. | Description |
|---|---|---|---|
| 3:3:1 | 302-5 | 1 | Fitting-Grease |
| 3:4 | 87-2420 | 1 | Seal-Joint, Ball |
| 3:5 | 32151-104 | 1 | Ring-Retaining, External |
| 4 | 115-2407 | 1 | Lower RH Control Arm ASM |
| 4:2 | 87-1450 | 2 | Bushing-Flange |
| 4:3 | 115-2165 | 1 | Ball Joint |
| 4:3:1 | 302-5 | 1 | Fitting-Grease |
| 4:4 | 87-2420 | 1 | Seal-Joint, Ball |
| 4:5 | 32151-104 | 1 | Ring-Retaining, External |
| 5 | 324-10 | 4 | Screw-HH |
| 6 | 114-8417 | 4 | Nut-HF, NI |
| 7 | 114-8419 | 6 | Screw-HHF |
| 8 | 99-5107 | 8 | Nut-Lock |
| 9 | 325-17 | 2 | Screw-HH |

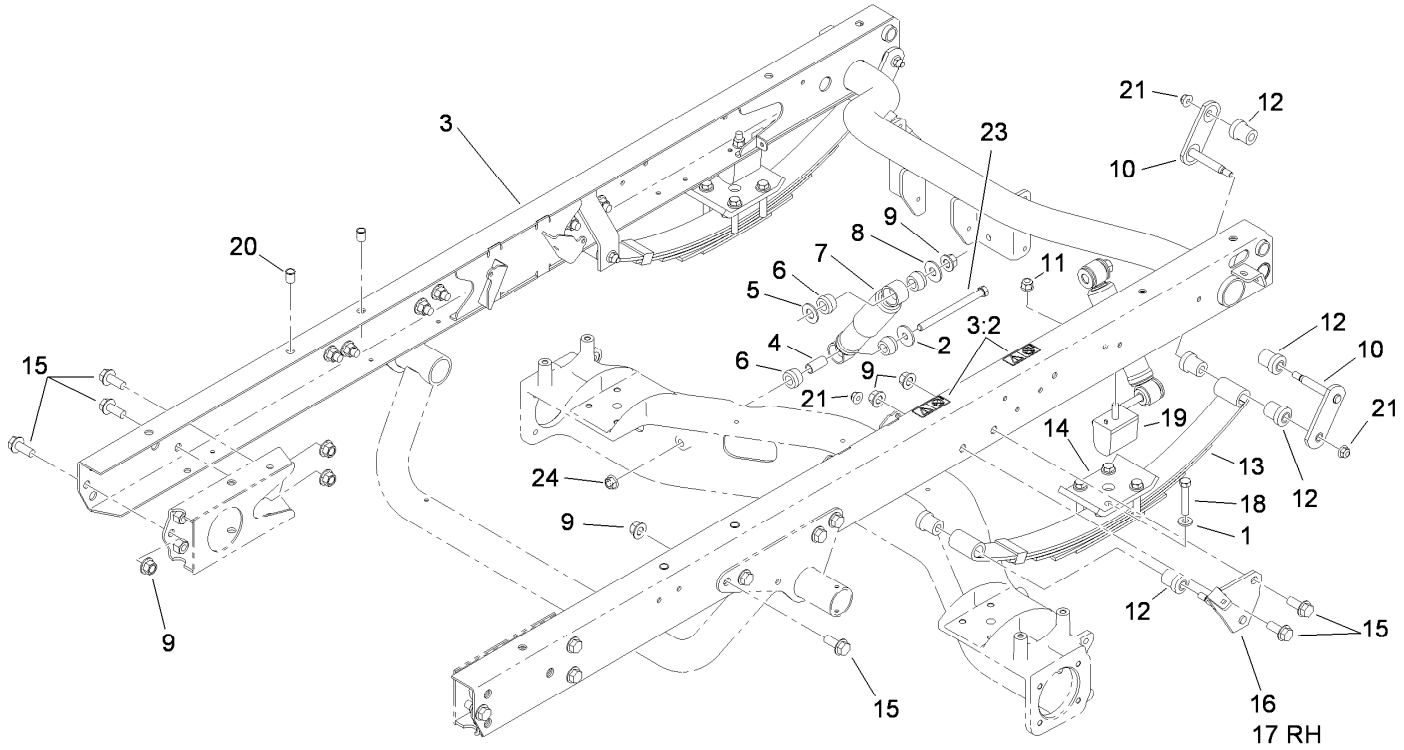


# Rear Frame Assembly

| Ref. | Part Number | Qty. | Description |
|---|---|---|---|
| 1 | 87-7480 | 8 | Washer |
| 2 | 87-5330 | 2 | Washer |
| 3 | 115-7911 | 1 | Rear Frame ASM |
| 3:2 | 115-2047 | 2 | Decal-Surface, Hot |
| 4 | 87-3600 | 2 | Spacer-Absorber, Shock |
| 5 | 3256-27 | 2 | Washer-Flat |
| 6 | 87-3920 | 8 | Bushing |
| 7 | 87-3110 | 2 | Absorber-Shock |
| 8 | 3256-6 | 2 | Washer-Flat |
| 9 | 99-5107 | 20 | Nut-Lock |
| 10 | 87-3980 | 4 | Shackle ASM |
| 11 | 103-9511 | 2 | Nut-Lock, NI |

| Ref. | Part Number | Qty. | Description |
|---|---|---|---|
| 12 | 87-4760 | 12 | Bushing-Rubber |
| 13 | 87-1490 | 2 | Spring-Leaf, Rear |
| 14 | 87-7470-03 | 2 | Plate-Spring, Clamp |
| 15 | 3234-38 | 18 | Screw-HHF |
| 16 | 87-3960 | 1 | Mount-Spring, LH |
| 17 | 87-3940 | 1 | Mount-Spring, RH |
| 18 | 115-2398 | 8 | Bolt-HH |
| 19 | 87-3470 | 2 | Bumper |
| 20 | 32148-9 | 4 | Insert-Nut |
| 21 | 104-8301 | 6 | Nut-HF, NI |
| 23 | 114-8424 | 2 | Screw-HH |
| 24 | 114-8417 | 2 | Nut-HF, NI |

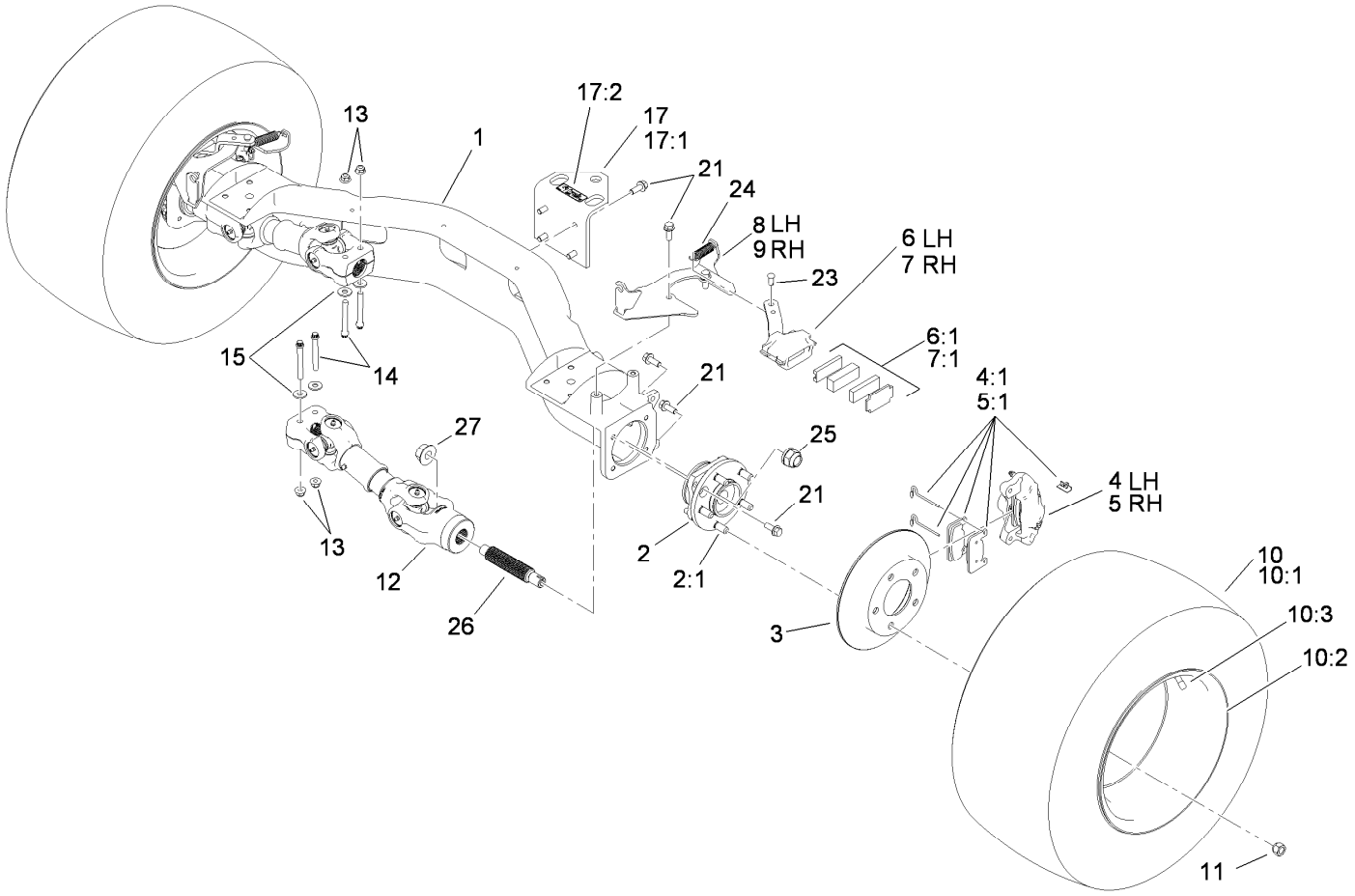


# Rear Axle Assembly

| Ref. | Part Number | Qty. | Description |
|---|---|---|---|
| 1 | 112-3188 | 1 | Axle-Rear |
| 2 | 112-3214 | 2 | Wheel Hub ASM |
| 2:1 | 114-8299 | 5 | Stud-Wheel |
| 3 | 114-8351 | 2 | Rotor-Brake |
| 4 | 114-8359 | 1 | Caliper-LH |
| 4:1 | 115-7846 | 1 | Brake Pad Kit (T108) |
| 5 | 114-8360 | 1 | Caliper-RH |
| 5:1 | 115-7846 | 1 | Brake Pad Kit (T108) |
| 6 | 114-8365 | 1 | Caliper-Mechanical, LH |
| 6:1 | 115-7847 | 1 | Parking Brake Pad Kit |
| 7 | 114-8366 | 1 | Caliper-Mechanical, RH |
| 7:1 | 115-7847 | 1 | Parking Brake Pad Kit |
| 8 | 115-2362-03 | 1 | Bracket-Caliper, LH |
| 9 | 115-2359-03 | 1 | Bracket-Caliper, RH |
| 10 | | 2 | Tire And Wheel ASM ● |
| 10:1 | 106-7868 | 1 | Tire |

| Ref. | Part Number | Qty. | Description |
|---|---|---|---|
| 10:2 | 114-8259 | 1 | Wheel |
| 10:3 | 232-27 | 1 | Stem-Valve |
| 11 | 242-50 | 10 | Nut-Lug |
| 12 | 114-8367 | 2 | Driveshaft ASM |
| 13 | 104-8301 | 4 | Nut-HF, NI |
| 14 | 98-2939 | 4 | Screw-Cap |
| 15 | 80-6990 | 4 | Washer-Hardened |
| 17 | 115-7742 | 1 | Hitch ASM |
| 17:1 | 92-5951-03 | 1 | Angle-Hitch |
| 17:2 | 115-7740 | 1 | Decal-Load, Towing |
| 21 | 3234-11 | 20 | Screw-HHF |
| 23 | 283-85 | 2 | Pin-Clevis |
| 24 | 104-6415 | 2 | Spring-Return, Pedal |
| 25 | 115-2164 | 2 | Nut-Spindle |
| 26 | 115-7771 | 2 | Shaft, Splined |
| 27 | 104-0753 | 2 | Nut-Flange |

● Not serviced separately

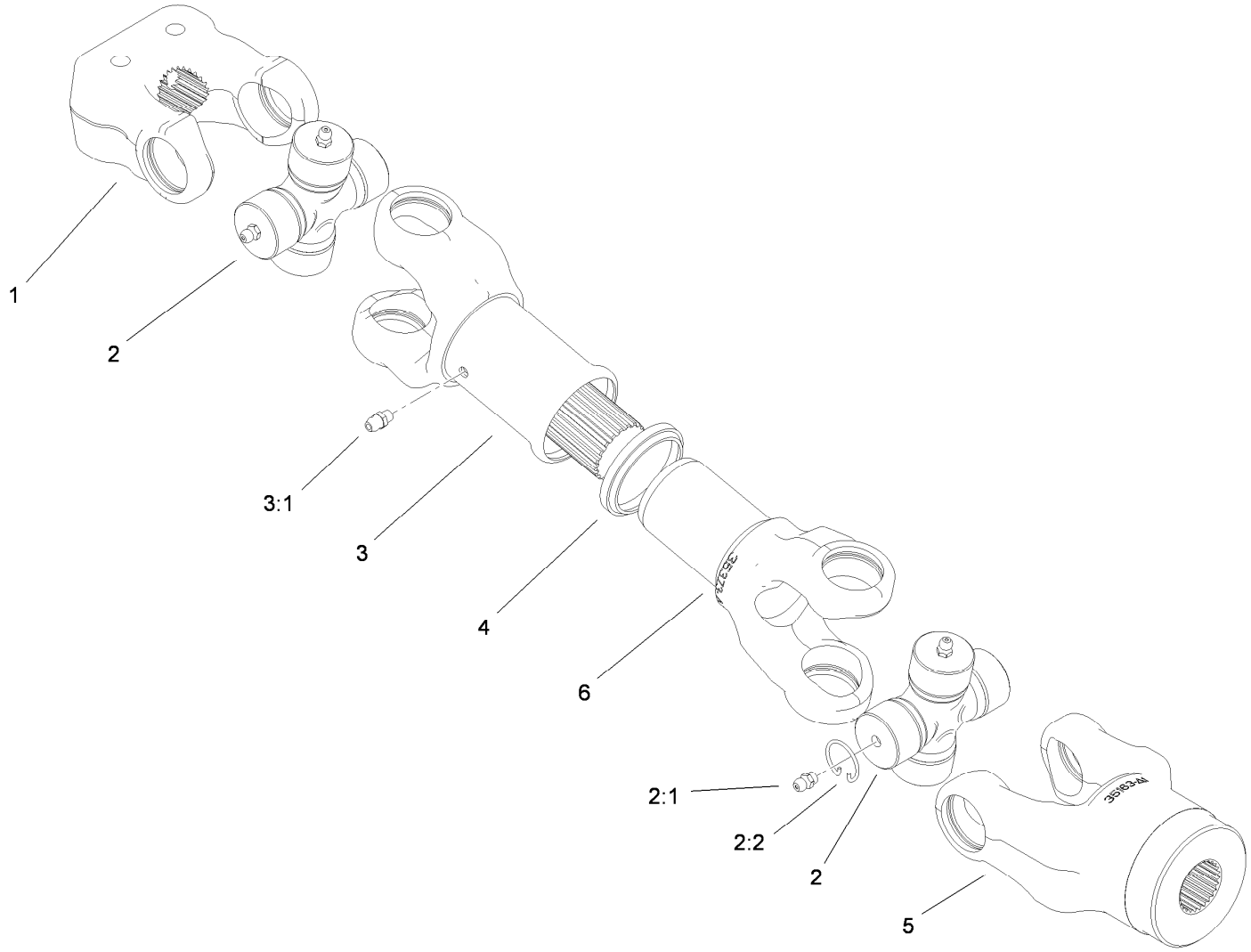


# Driveshaft Assembly No. 114-8367

| *Ref.* | *Part Number* | *Qty.* | *Description* |
|---|---|---|---|
| 1 | 98-2940 | 1 | Yoke |
| 2 | 92-4187 | 2 | Cross And Bearing Kit |
| 2:1 | 302-58 | 4 | Fitting-Straight |
| 2:2 | 92-4188 | 4 | Ring-Snap |
| 3 | 92-4179 | 1 | Yoke-Tube, Shaft And Seal |
| 3:1 | 302-5 | 1 | Fitting-Grease |
| 4 | 92-4180 | 1 | Seal |
| 5 | 115-2351 | 1 | Yoke |
| 6 | 92-4182 | 1 | Yoke-Telescoping |

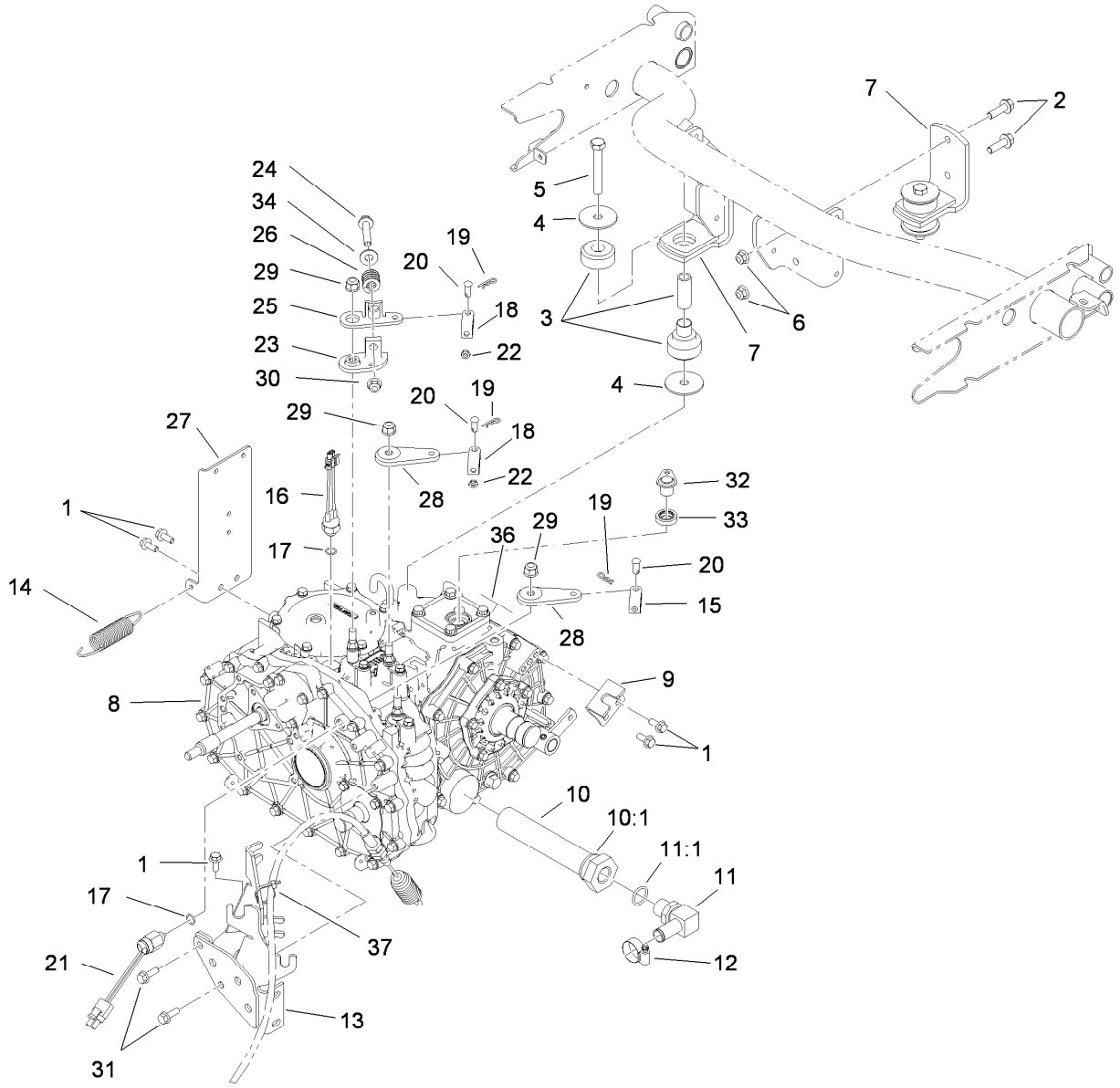


# Transaxle Assembly

| Ref. | Part Number | Qty. | Description |
|---|---|---|---|
| 1 | 98-7977 | 5 | Screw-HHF |
| 2 | 3234-24 | 4 | Screw-HHF |
| 3 | 106-7865 | 2 | Mount-Engine |
| 4 | 87-5100 | 4 | Washer-Snubbing |
| 5 | 33116-080 | 2 | Screw-HH |
| 6 | 104-8301 | 4 | Nut-HF, NI |
| 7 | 87-5800-03 | 2 | Mount-Transaxle |
| 8 | 115-7783 | 1 | 2 Wheel Drive Transaxle ASM |
| 9 | 87-4470 | 1 | Bracket-Lock, Differential |
| 10 | 87-3990 | 1 | Strainer-Transaxle |
| 10:1 | 237-123 | 1 | O-Ring |
| 11 | 353-987 | 1 | Fitting-HYD, 90 DEG (Barbed) |
| 11:1 | 237-81 | 1 | O-Ring |
| 12 | 2412-129 | 1 | Clamp-Hose |
| 13 | 105-4207-03 | 1 | Mount-Cable |
| 14 | 68-9950 | 1 | Spring-Traction |
| 15 | 87-7160 | 1 | Clevis-Cable |
| 16 | 72-4310 | 1 | Switch-Ball |

| Ref. | Part Number | Qty. | Description |
|---|---|---|---|
| 17 | 237-30 | 2 | O-Ring |
| 18 | 87-2310 | 2 | Clevis-Cable |
| 19 | 3290-307 | 3 | Pin-Cotter |
| 20 | 283-62 | 3 | Pin-Clevis |
| 21 | 87-6710 | 1 | Switch-Transmission |
| 22 | 3220-1 | 2 | Nut-Jam |
| 23 | 87-7970 | 1 | Arm-Shift |
| 24 | 66-9302 | 1 | Screw-HHF, Whiz |
| 25 | 87-8250 | 1 | Plate-Arm, Shift |
| 26 | 87-6910 | 1 | Spring-Compression |
| 27 | 115-2240-03 | 1 | Bracket-Fuel |
| 28 | 87-7960 | 2 | Lever-Shift |
| 29 | 103-9511 | 3 | Nut-Lock, NI |
| 30 | 3290-357 | 1 | Nut-HHF, Whiz |
| 31 | 33104-025 | 2 | Screw-HHF |
| 32 | 115-7774 | 1 | Plug ASM |
| 33 | 92-3735 | 1 | Seal-Oil, Sensor |
| 34 | 3256-4 | 1 | Washer-Flat |
| 36 | 115-7741 | 1 | Decal-Oil, Transmission |
| 37 | 3290-379 | 1 | Tie-Cable |

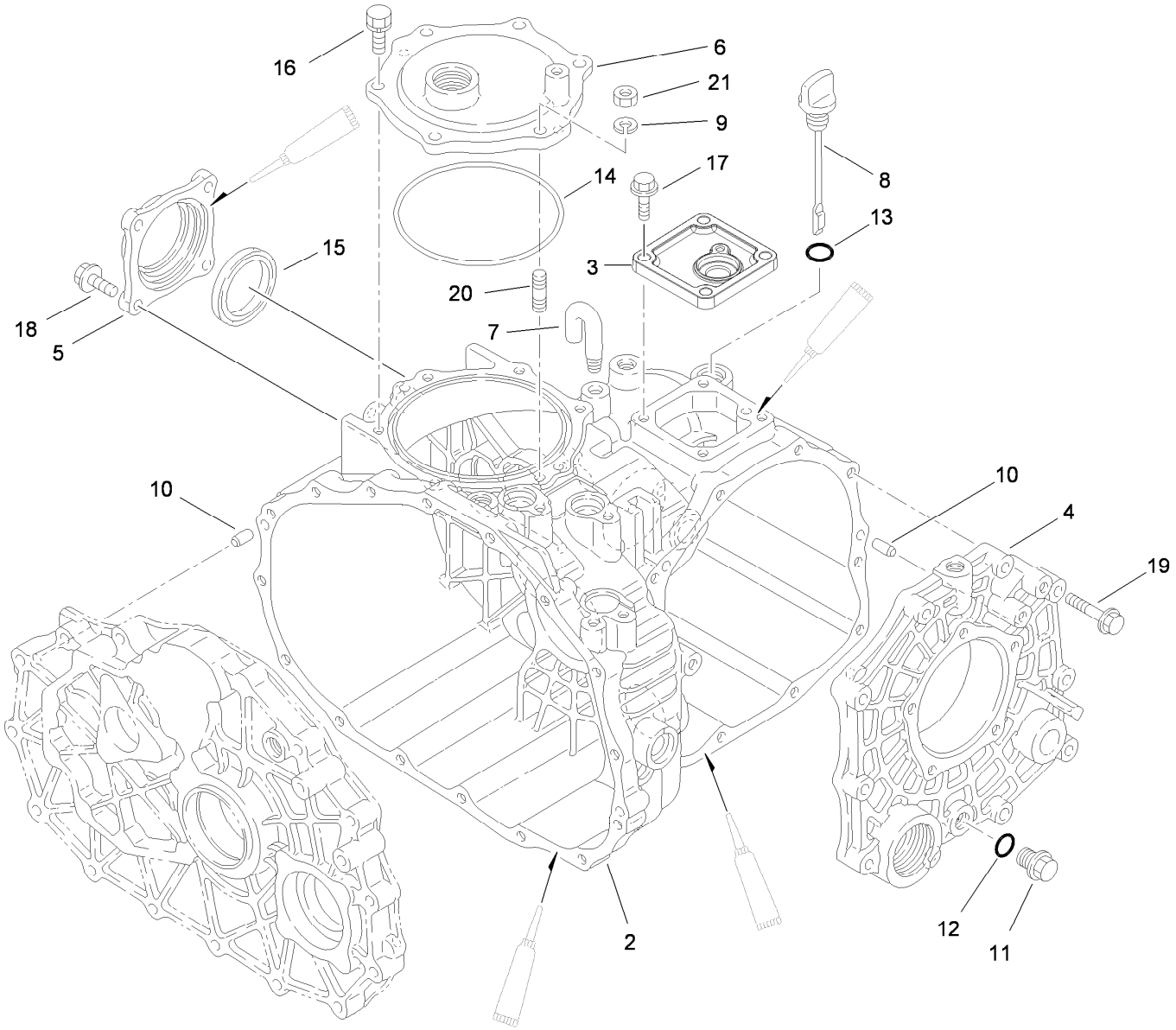


# Case Assembly
# Transaxle Assembly No. 115-7783

| Ref. | Part Number | Qty. | Description |
|---|---|---|---|
| 2 | 92-0651 | 1 | Case-Transmission |
| 3 | 92-0810 | 1 | Cover-Upper, Sensor |
| 4 | 92-0653 | 1 | Cover-Side |
| 5 | 92-0655 | 1 | Cover-Seal, Axle |
| 6 | 92-0656 | 1 | Cover-Upper, PTO |
| 7 | 92-0743 | 1 | Breather-Air |
| 8 | 92-0662 | 1 | Cap-Oil |
| 9 | 92-0762 | 1 | Washer-Spring |
| 10 | 92-0765 | 4 | Pin-Parallel |
| 11 | 92-0773 | 1 | Plug-Drain |

| Ref. | Part Number | Qty. | Description |
|---|---|---|---|
| 12 | 92-0787 | 1 | O-Ring |
| 13 | 92-0788 | 1 | O-Ring |
| 14 | 92-0790 | 1 | O-Ring |
| 15 | 92-0793 | 1 | Seal-Oil |
| 16 | 92-0796 | 5 | Bolt |
| 17 | 33104-025 | 4 | Screw-HHF |
| 18 | 33104-025 | 4 | Screw-HHF |
| 19 | 33104-040 | 10 | Screw-HHF |
| 20 | 92-0805 | 1 | Bolt 8X20 |
| 21 | 68-9400 | 1 | Nut-Flange |

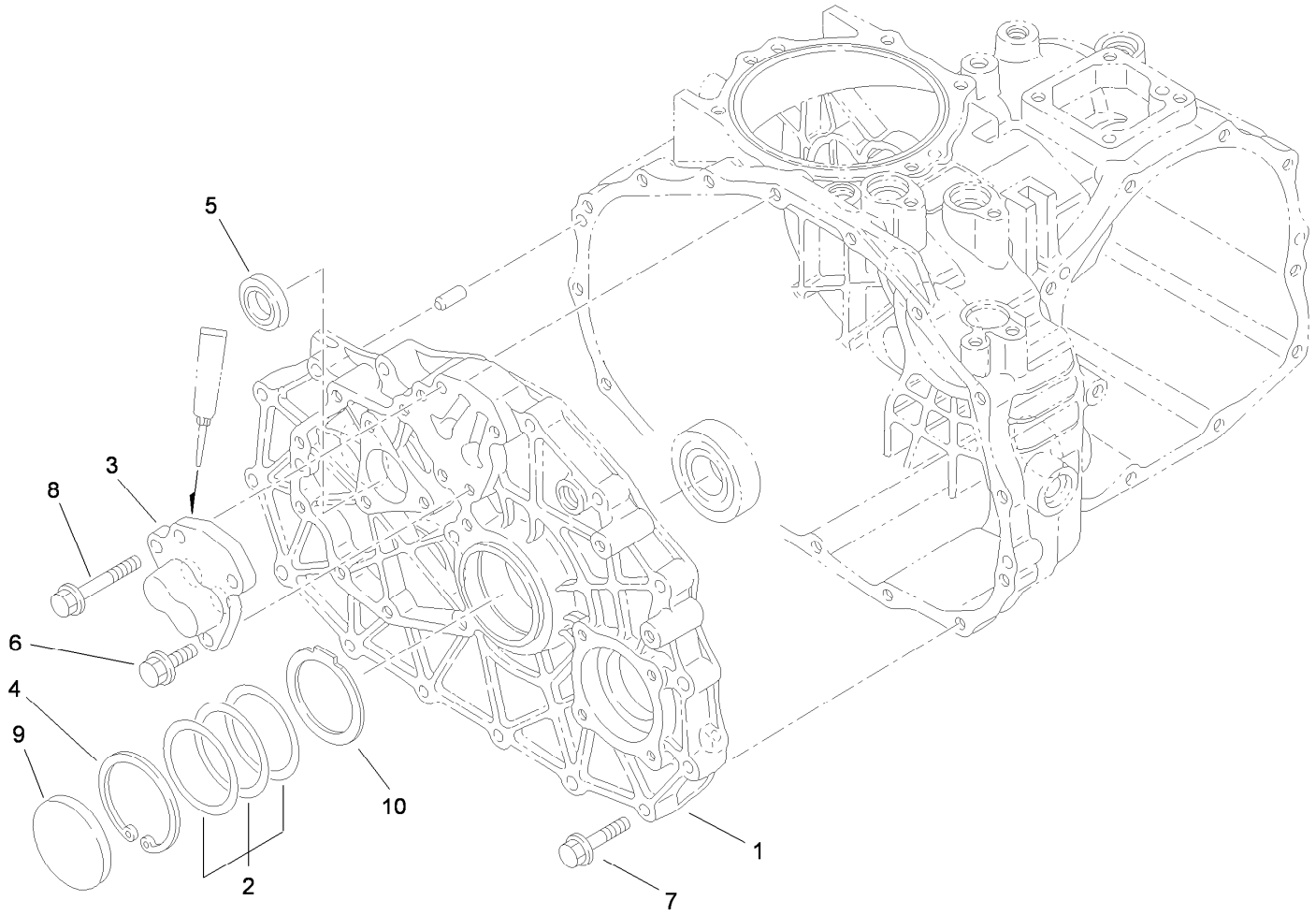


# Center Plate Assembly
# Transaxle Assembly No. 115-7783

| *Ref.* | *Part Number* | *Qty.* | *Description* |
|---|---|---|---|
| 1 | 100-4461 | 1 | Plate-Center |
| 2 | 100-4460 | 1 | Shim-Set |
| 3 | 92-0706 | 1 | Shaft-Fork |
| 4 | 92-0759 | 1 | Ring-Snap |
| 5 | 92-0791 | 1 | Seal-Oil |
| 6 | 33104-025 | 3 | Screw-HHF |
| 7 | 33104-040 | 15 | Screw-HHF |
| 8 | 33104-050 | 1 | Screw-HHF |
| 9 | 92-0807 | 1 | Cap-Sealing |
| 10 | 100-4465 | 1 | Shim (W/Tab) |

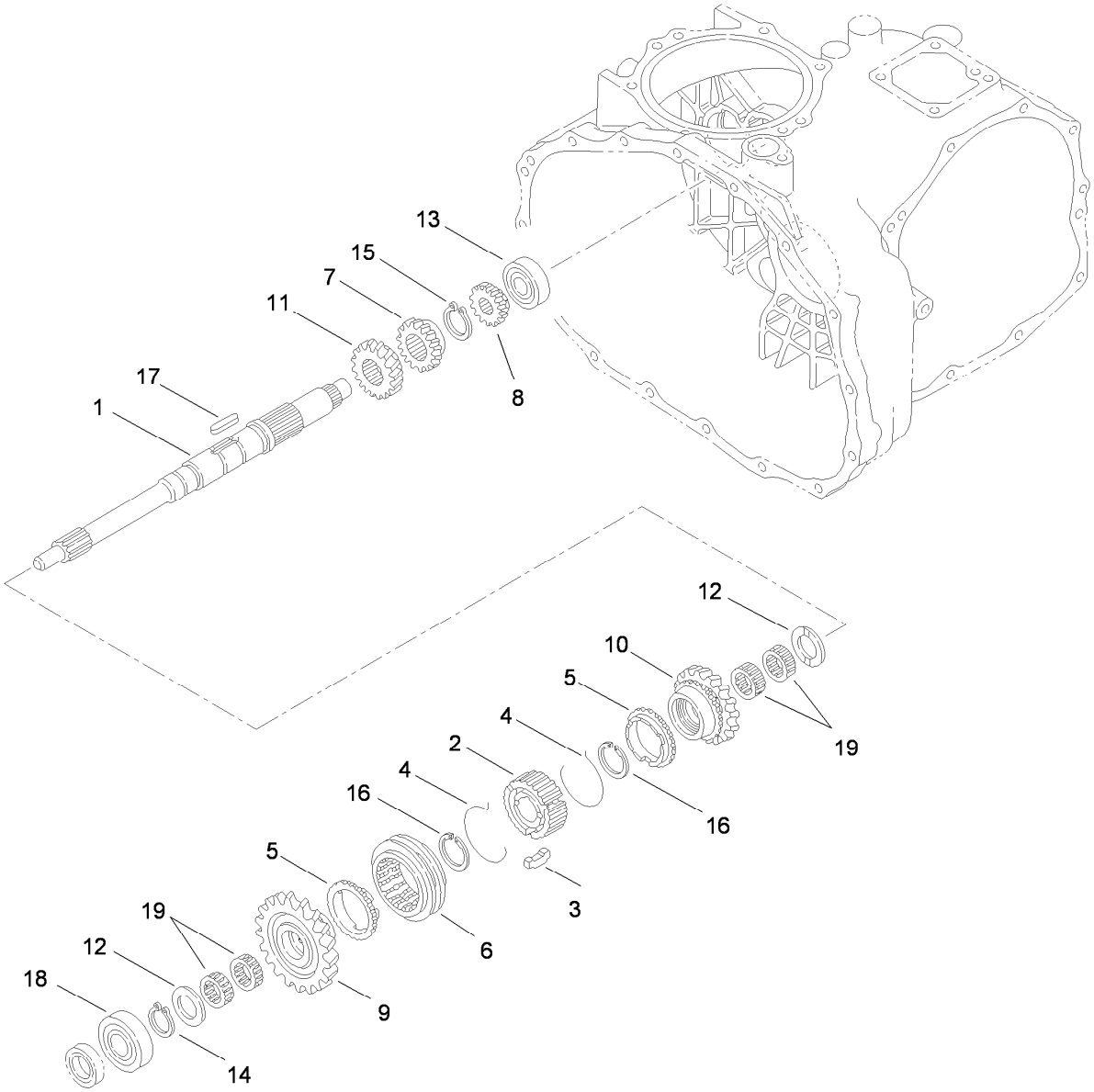


# Main Shaft Assembly
# Transaxle Assembly No. 115-7783

| Ref. | Part Number | Qty. | Description |
|---|---|---|---|
| 1 | 92-0663 | 1 | Shaft-Main |
| 2 | 92-0664 | 1 | Hub-Synchro |
| 3 | 92-0665 | 3 | Key-Synchro |
| 4 | 92-0666 | 2 | Spring-Synchro |
| 5 | 92-0667 | 2 | Ring-Synchro |
| 6 | 92-0668 | 1 | Shifter-Synchro |
| 7 | 92-0672 | 1 | Gear-Main, 18 Tooth |
| 8 | 92-0673 | 1 | Gear-Main, 14 Tooth |
| 9 | 110-2521 | 1 | Gear-Main, 27 Tooth |
| 10 | 110-2522 | 1 | Gear- Main, 24 Tooth |

| Ref. | Part Number | Qty. | Description |
|---|---|---|---|
| 11 | 92-0687 | 1 | Gear-Main, 16 Tooth |
| 12 | 92-0740 | 2 | Washer-Thrust |
| 13 | 92-0650 | 1 | Bearing |
| 14 | 92-0753 | 1 | Ring-Snap |
| 15 | 92-0754 | 1 | Ring-Snap |
| 16 | 92-0763 | 2 | Ring-Snap |
| 17 | 92-0772 | 1 | Key |
| 18 | 251-8 | 1 | Bearing-Ball |
| 19 | 92-0781 | 4 | Bearing-Needle |

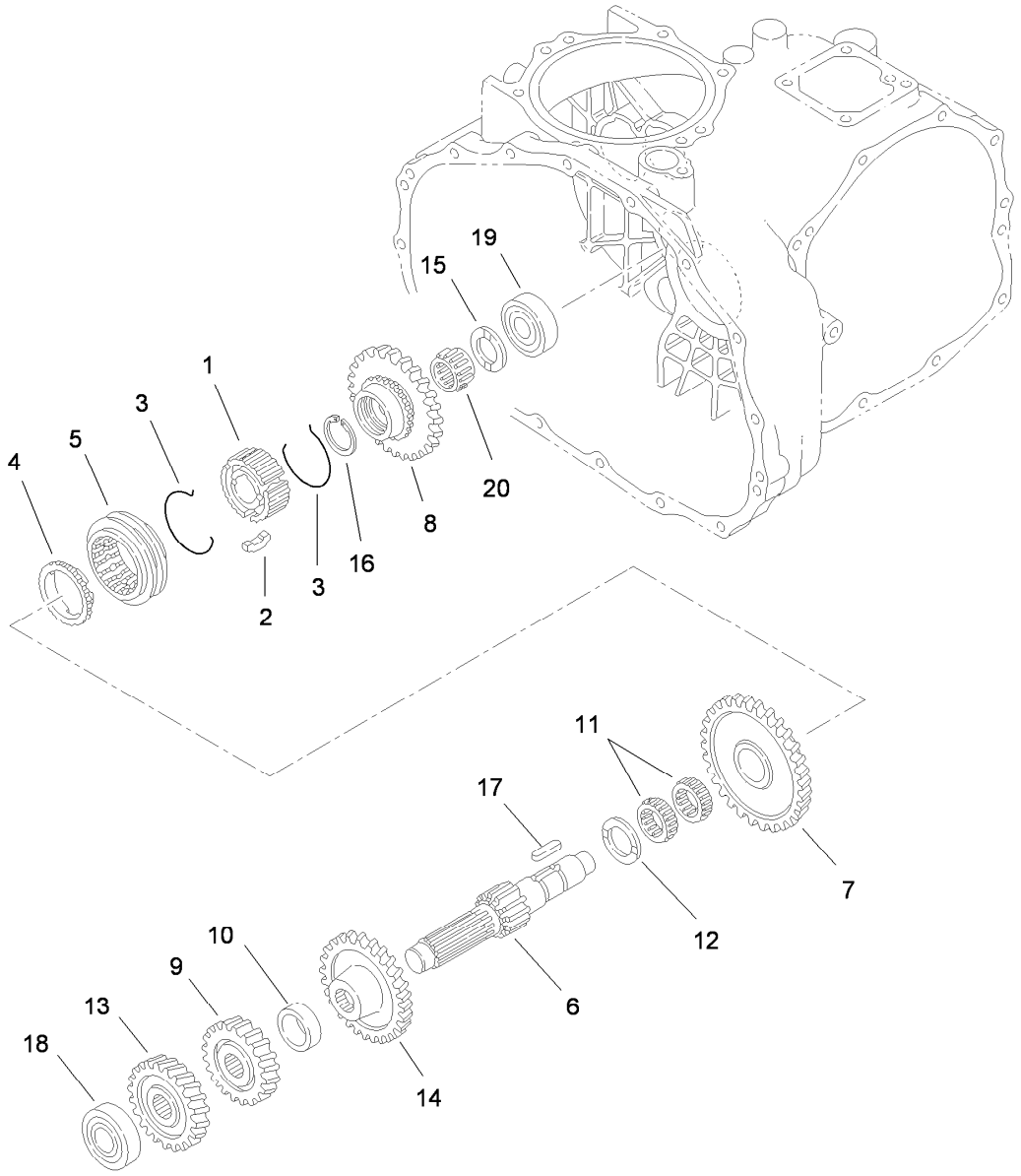


# Reduction Shaft Assembly
# Transaxle Assembly No. 115-7783

| Ref. | Part Number | Qty. | Description |
|---|---|---|---|
| 1 | 92-0664 | 1 | Hub-Synchro |
| 2 | 92-0665 | 3 | Key-Synchro |
| 3 | 92-0666 | 2 | Spring-Synchro |
| 4 | 92-0667 | 1 | Ring-Synchro |
| 5 | 92-0668 | 1 | Shifter-Synchro |
| 6 | 92-0674 | 1 | Shaft-Reduction |
| 7 | 110-2524 | 1 | Gear- Reduction, 49 Tooth |
| 8 | 92-0819 | 1 | Gear-Reduction, 40 Tooth |
| 9 | 92-0769 | 1 | Pin-Roll |
| 10 | 92-0680 | 1 | Collar |

| Ref. | Part Number | Qty. | Description |
|---|---|---|---|
| 11 | 92-0681 | 2 | Bearing-Needle |
| 12 | 92-0682 | 1 | Washer-Thrust |
| 13 | 92-0822 | 1 | Gear-Reduction, 28 Tooth |
| 14 | 92-0823 | 1 | Gear-Reduction, 43 Tooth |
| 15 | 92-0740 | 1 | Washer-Thrust |
| 16 | 92-0673 | 1 | Gear-Main, 14 Tooth |
| 17 | 92-0772 | 1 | Key |
| 18 | 105-7985 | 1 | Bearing |
| 19 | 92-0778 | 1 | Bearing |
| 20 | 92-0782 | 1 | Bearing-Needle |

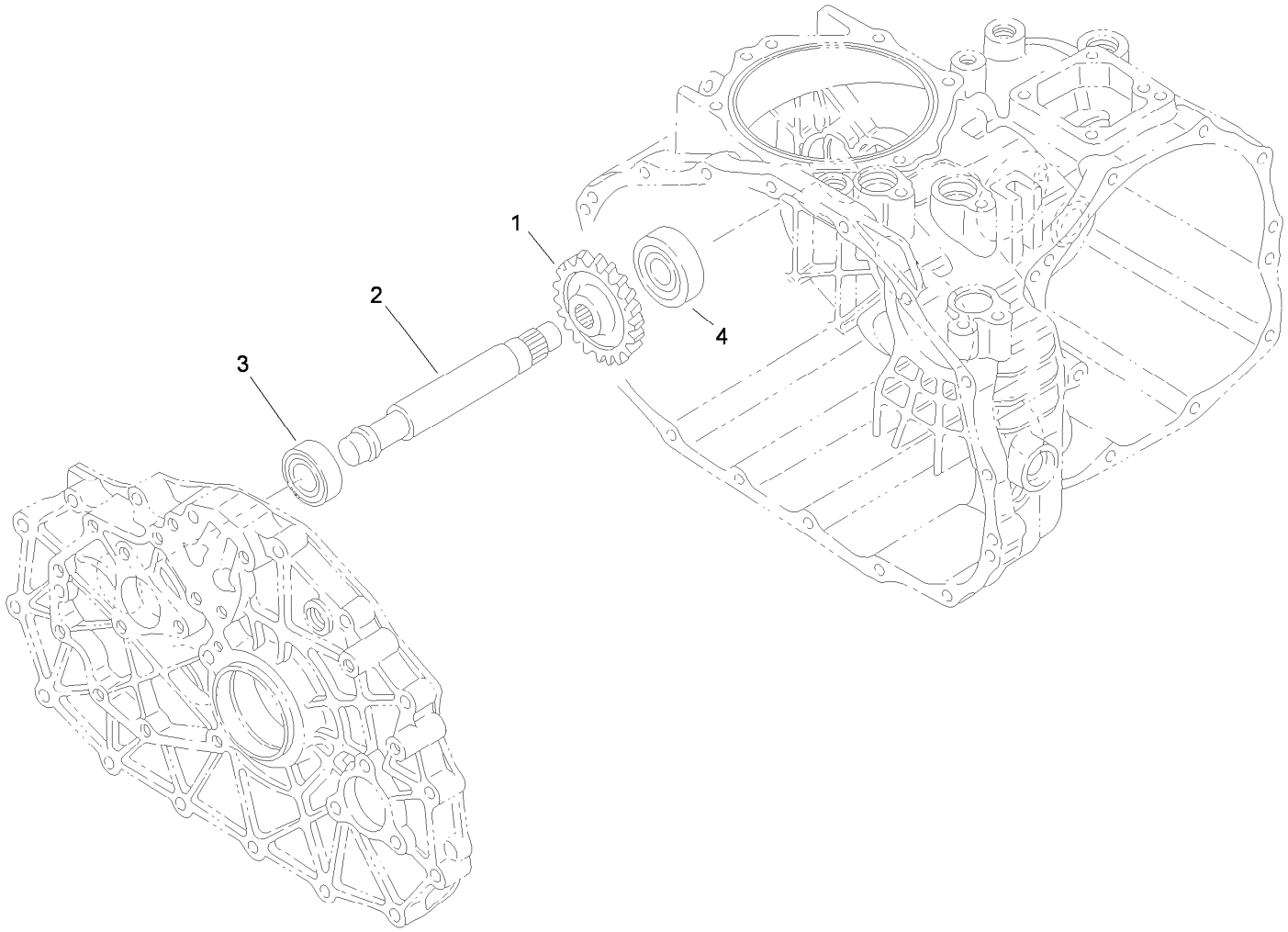


# Reverse Shaft Assembly
# Transaxle Assembly No. 115-7783

| *Ref.* | *Part Number* | *Qty.* | *Description* |
|---|---|---|---|
| 1 | 92-0684 | 1 | Gear-Reverse, 33 Tooth |
| 2 | 92-0824 | 1 | Shaft-Idler, Reverse |
| 3 | 251-346 | 1 | Bearing-Ball |
| 4 | 92-0778 | 1 | Bearing |

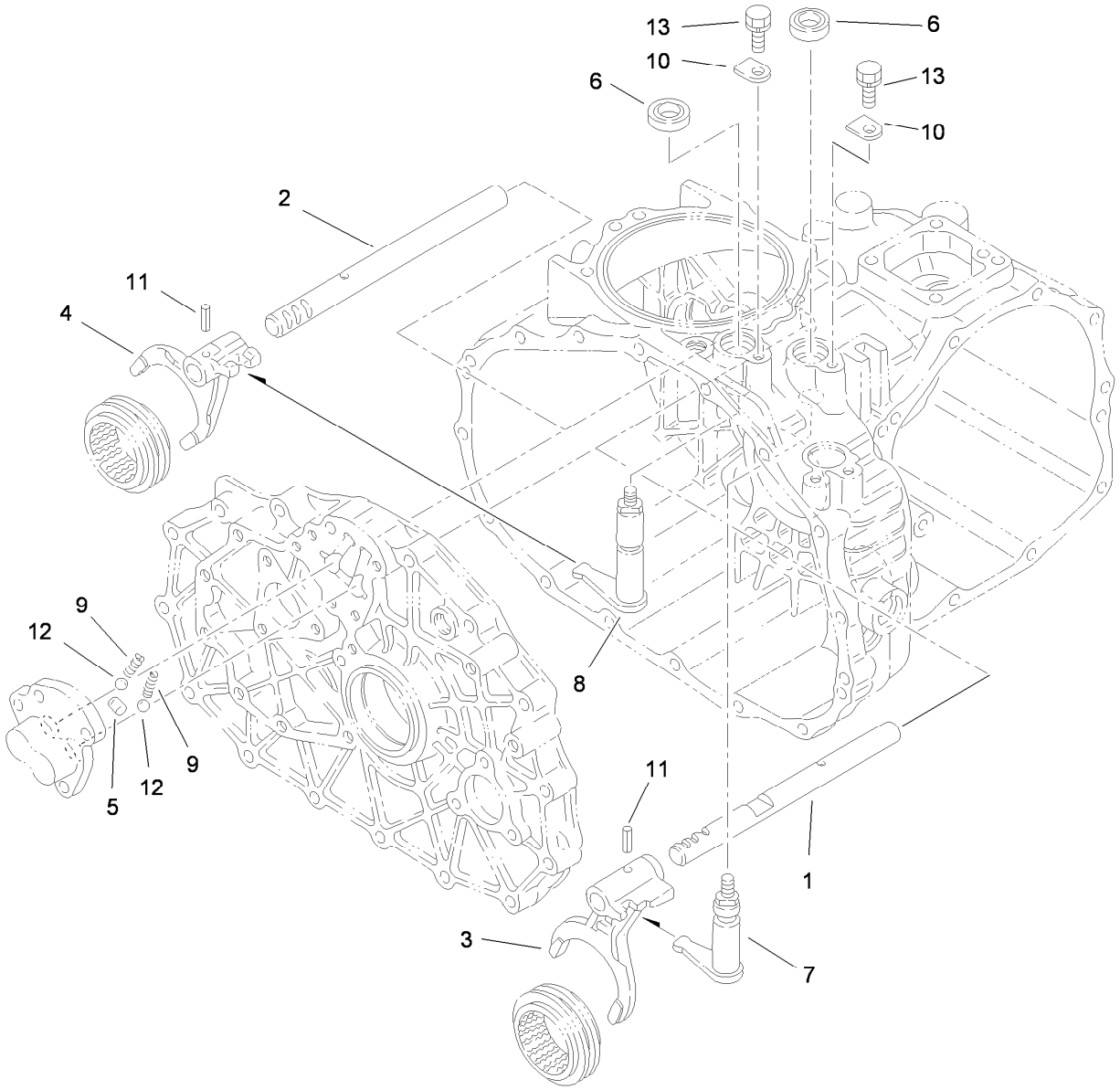


# Main Shift Assembly
# Transaxle Assembly No. 115-7783

| *Ref.* | *Part Number* | *Qty.* | *Description* |
|---|---|---|---|
| 1 | 92-0698 | 1 | Shaft-Fork |
| 2 | 92-0699 | 1 | Shaft-Fork |
| 3 | 92-0700 | 1 | Fork-Shift |
| 4 | 92-0701 | 1 | Fork-Shift |
| 5 | 92-0705 | 1 | Lock-Spindle |
| 6 | 92-0729 | 2 | Seal-Oil |
| 7 | 92-0816 | 1 | Arm-Shift |
| 8 | 92-0817 | 1 | Arm-Shift |
| 9 | 92-0731 | 2 | Spring |
| 10 | 92-0732 | 2 | Plate-Keeper |
| 11 | 92-0769 | 2 | Pin-Roll |
| 12 | 92-0785 | 2 | Ball-Steel |
| 13 | 33104-016 | 2 | Screw-HHF |

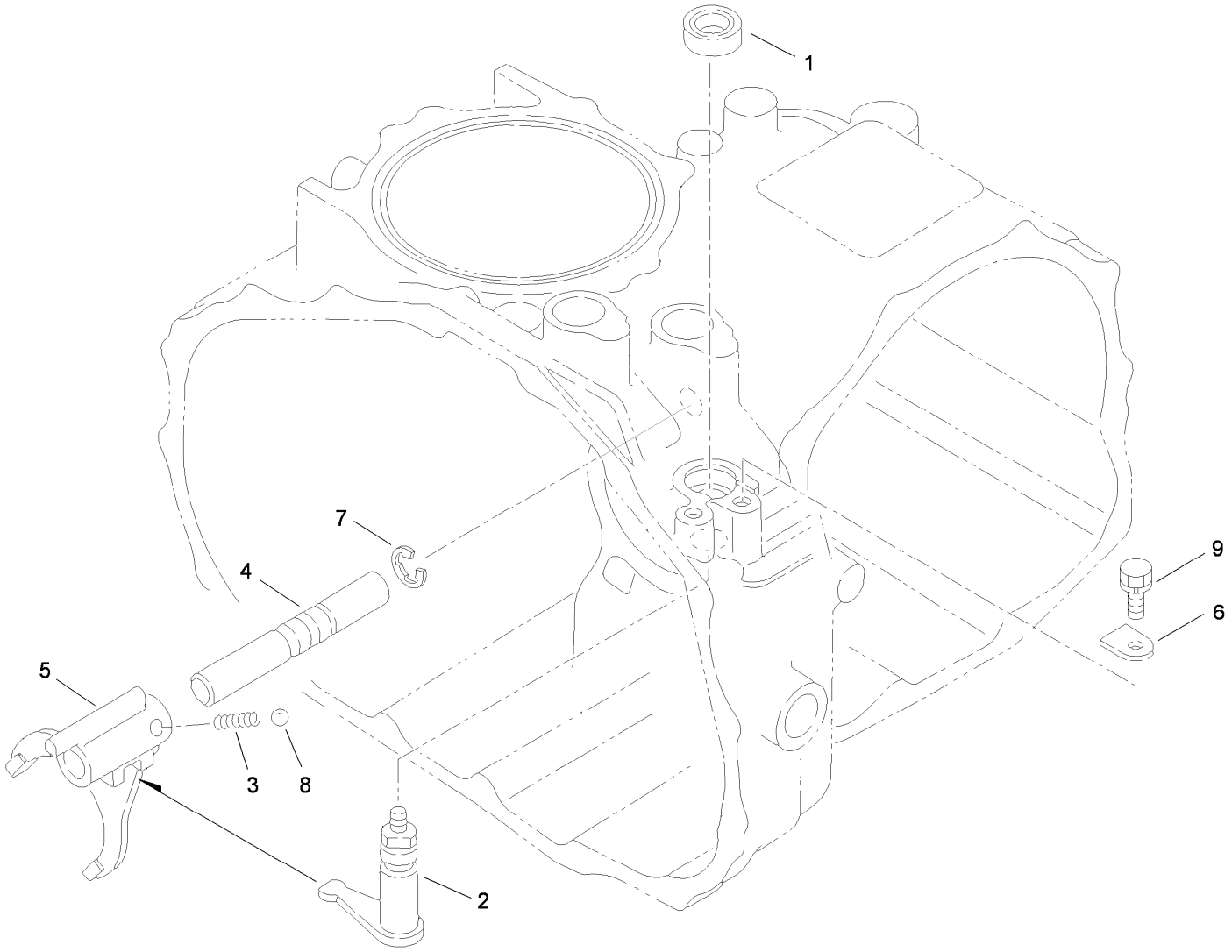


# Hi-Lo Shift Assembly
# Transaxle Assembly No. 115-7783

| *Ref.* | *Part Number* | *Qty.* | *Description* |
|---|---|---|---|
| 1 | 92-0729 | 1 | Seal-Oil |
| 2 | 92-0818 | 1 | Arm-Shift |
| 3 | 92-0731 | 1 | Spring |
| 4 | 92-0708 | 1 | Shaft-Fork |
| 5 | 92-0709 | 1 | Fork-Shift |
| 6 | 92-0732 | 1 | Plate-Keeper |
| 7 | 92-0761 | 1 | Ring-E |
| 8 | 92-0785 | 1 | Ball-Steel |
| 9 | 33104-016 | 1 | Screw-HHF |

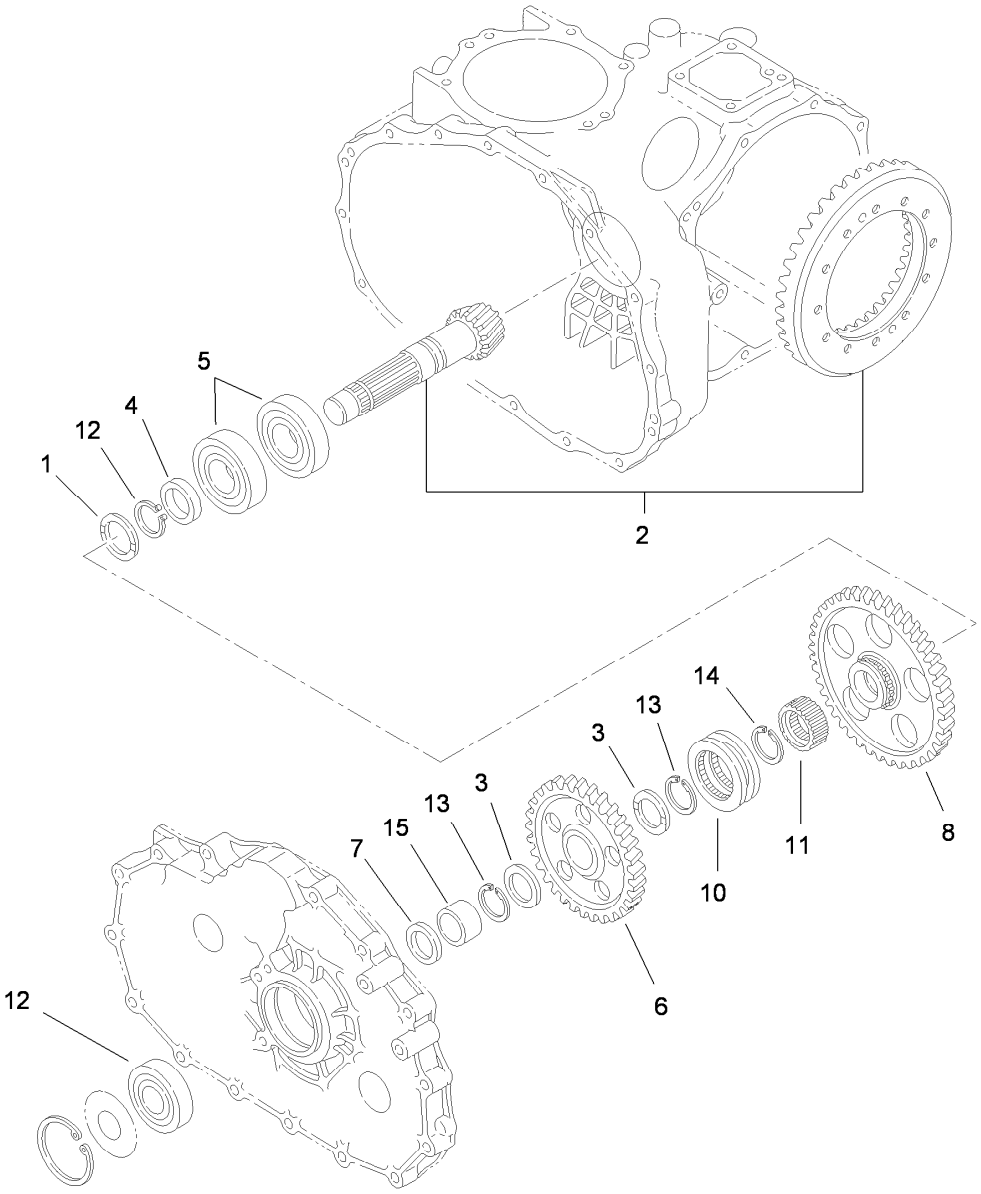


# Countershaft Assembly
# Transaxle Assembly No. 115-7783

| *Ref.* | *Part Number* | *Qty.* | *Description* |
|---|---|---|---|
| 1 | 92-0741 | 1 | Washer-Thrust |
| 2 | 105-7983 | 1 | Countershaft And Ring Gear ASM |
| 3 | 92-0711 | 2 | Washer-Thrust |
| 4 | 92-0713 | 1 | Collar |
| 5 | 92-0714 | 2 | Bearing |
| 6 | 92-0715 | 1 | Gear-Countershaft |
| 7 | 92-0716 | 1 | Collar |
| 8 | 92-0717 | 1 | Gear-Countershaft |
| 10 | 92-0718 | 1 | Shifter |
| 11 | 105-7986 | 1 | Collar-Spline |
| 12 | 92-0712 | 1 | Bearing-Ball |
| 13 | 105-7987 | 2 | Ring-Snap |
| 14 | 92-0755 | 1 | Ring-Snap |
| 15 | 92-0783 | 1 | Race-Inner |

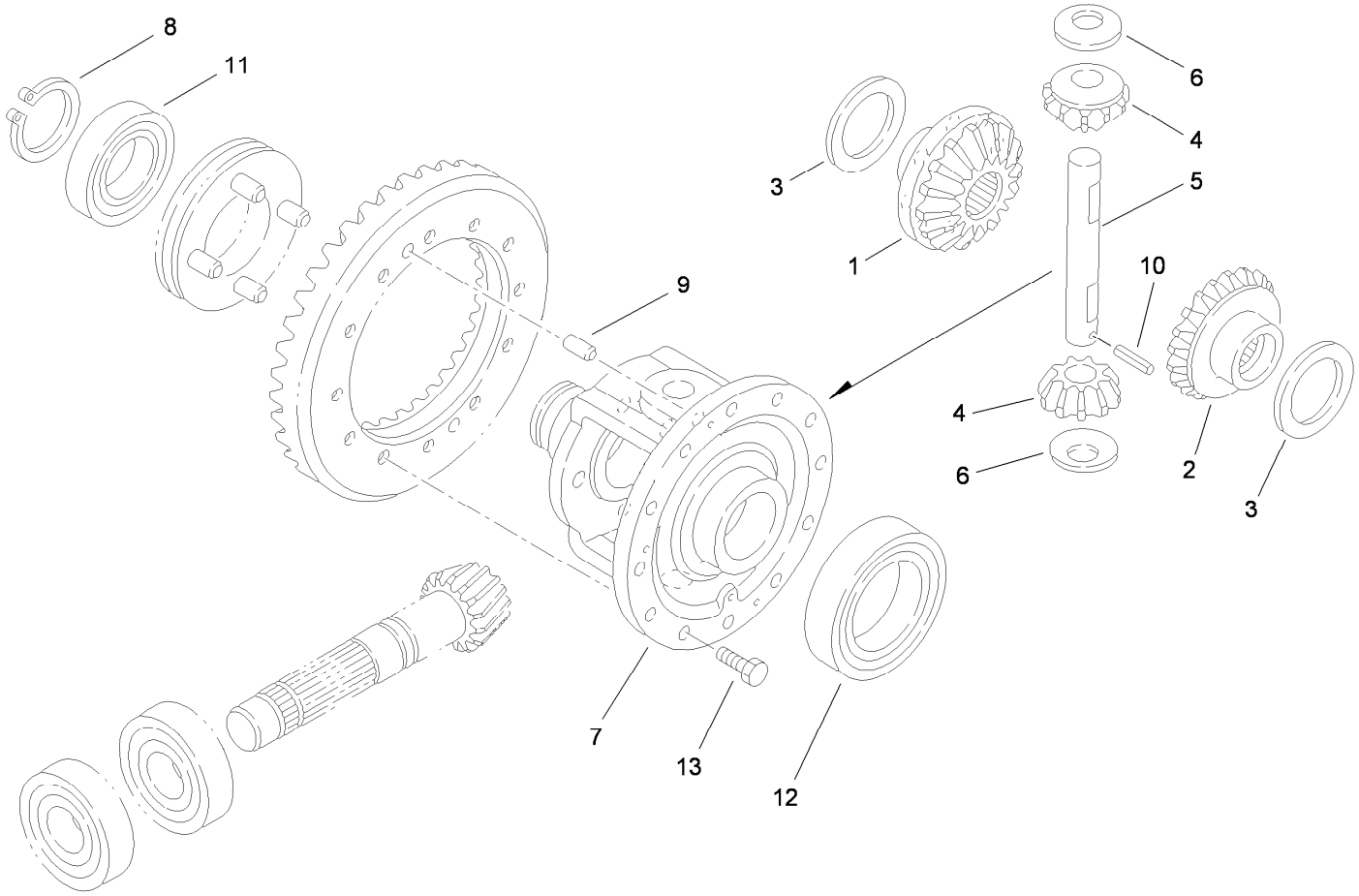


# Differential Gear Assembly
# Transaxle Assembly No. 115-7783

| *Ref.* | *Part Number* | *Qty.* | *Description* |
|---|---|---|---|
| 1 | 92-0745 | 1 | Gear-Side, LH |
| 2 | 92-0746 | 1 | Gear-Side, RH |
| 3 | 92-0747 | 2 | Side-Gear, Left Inner |
| 4 | 92-0748 | 2 | Pinion-Differential |
| 5 | 92-0749 | 1 | Shaft-Pinion |
| 6 | 92-0750 | 2 | Washer |
| 7 | 92-0720 | 1 | Case-Differential |
| 8 | 92-0756 | 1 | Ring-Snap |
| 9 | 92-0765 | 2 | Pin-Parallel |
| 10 | 92-0768 | 1 | Pin-Roll, Spring |
| 11 | 92-0775 | 1 | Bearing |
| 12 | 92-0776 | 1 | Bearing |
| 13 | 92-0803 | 12 | Bolt |

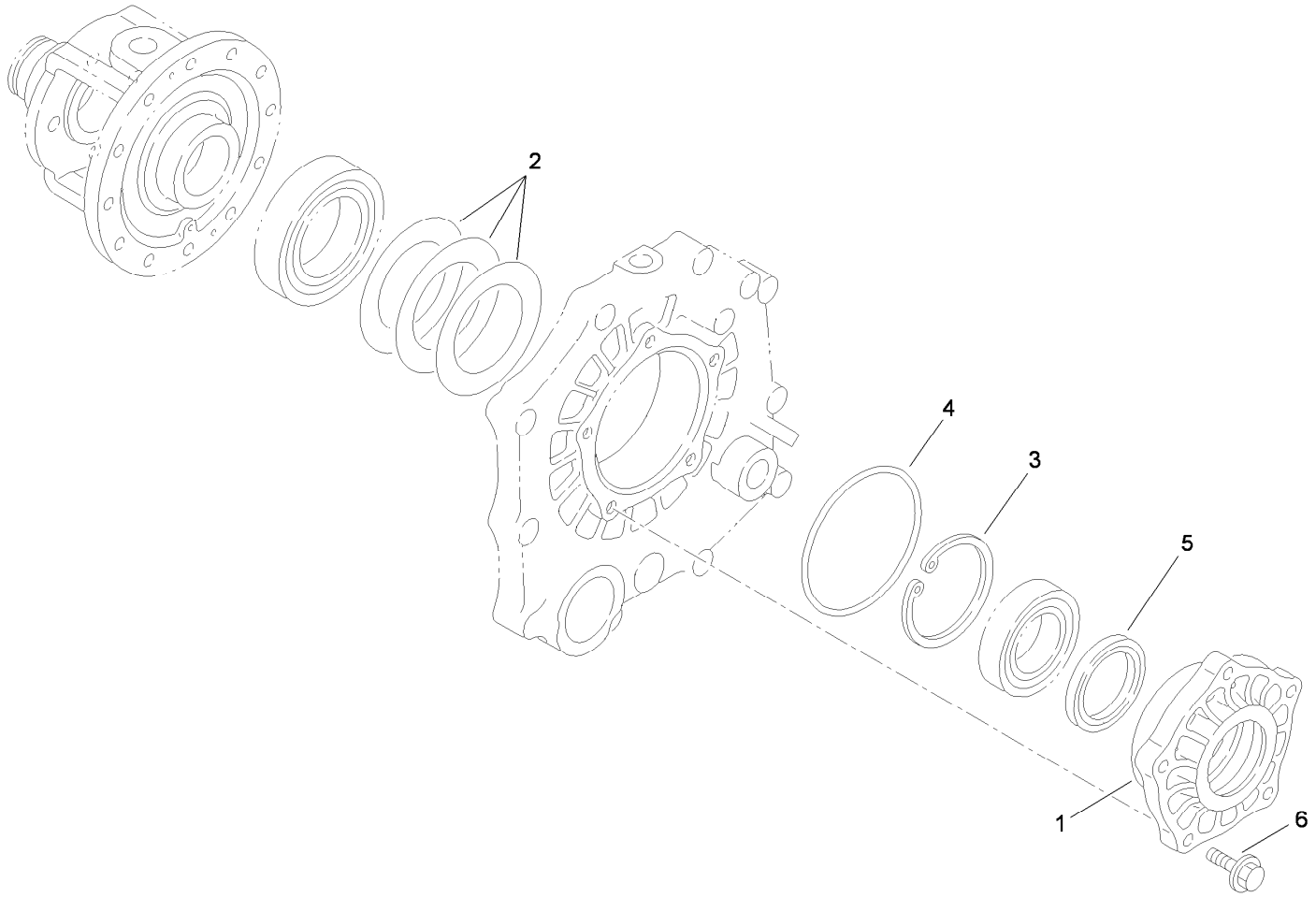


# Differential Carrier Assembly
# Transaxle Assembly No. 115-7783

| *Ref.* | *Part Number* | *Qty.* | *Description* |
|---|---|---|---|
| 1 | 92-0654 | 1 | Carrier-Differential |
| 2 | 92-0809 | 1 | Set-Shim |
| 3 | 92-0760 | 1 | Ring-Snap |
| 4 | 92-0789 | 1 | O-Ring |
| 5 | 92-0793 | 1 | Seal-Oil |
| 6 | 33104-030 | 5 | Screw-HHF |

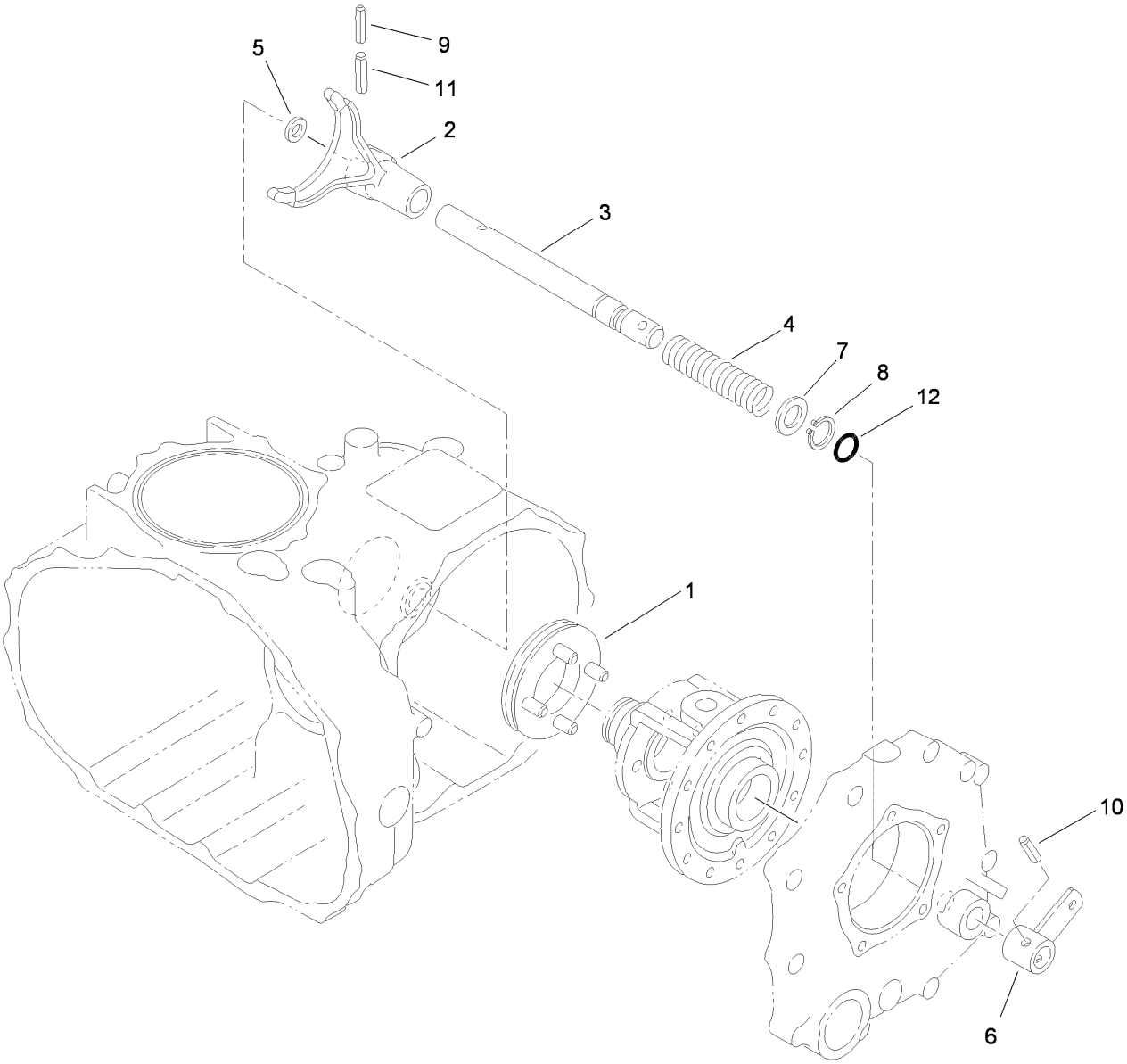


# Differential Lock Assembly
# Transaxle Assembly No. 115-7783

| *Ref.* | *Part Number* | *Qty.* | *Description* |
|---|---|---|---|
| 1 | 92-0730 | 1 | Slider-Differential, Lock |
| 2 | 92-0721 | 1 | Fork-Lock, Differential |
| 3 | 92-0722 | 1 | Shaft-Fork, Lock Differential |
| 4 | 92-0723 | 1 | Spring-Lock, Differential |
| 5 | 92-0744 | 1 | Washer |
| 6 | 92-0724 | 1 | Arm-Lock, Differential |
| 7 | 92-0733 | 1 | Washer |
| 8 | 92-0753 | 1 | Ring-Snap |
| 9 | 92-0768 | 1 | Pin-Roll, Spring |
| 10 | 92-0770 | 1 | Pin-Roll, Spring |
| 11 | 92-0771 | 1 | Pin-Roll, Spring |
| 12 | 92-0787 | 1 | O-Ring |

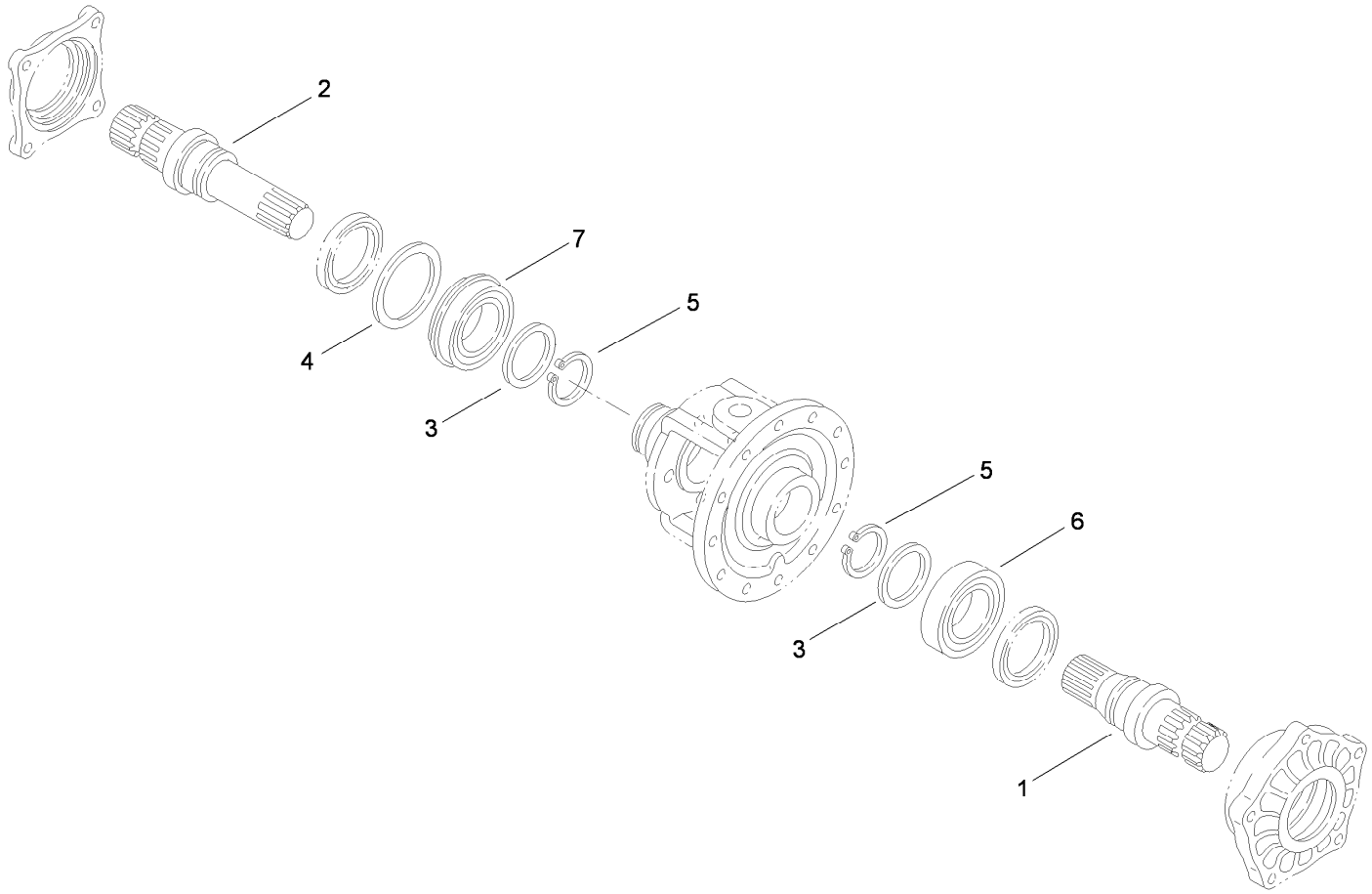


# Axle Shaft Assembly
# Transaxle Assembly No. 115-7783

| *Ref.* | *Part Number* | *Qty.* | *Description* |
|---|---|---|---|
| 1 | 92-0725 | 1 | Shaft-Axle, Left |
| 2 | 92-0726 | 1 | Shaft-Axle, Right |
| 3 | 92-0727 | 2 | Washer |
| 4 | 92-0728 | 1 | Washer |
| 5 | 92-0756 | 2 | Ring-Snap |
| 6 | 92-0775 | 1 | Bearing |
| 7 | 92-0780 | 1 | Bearing |

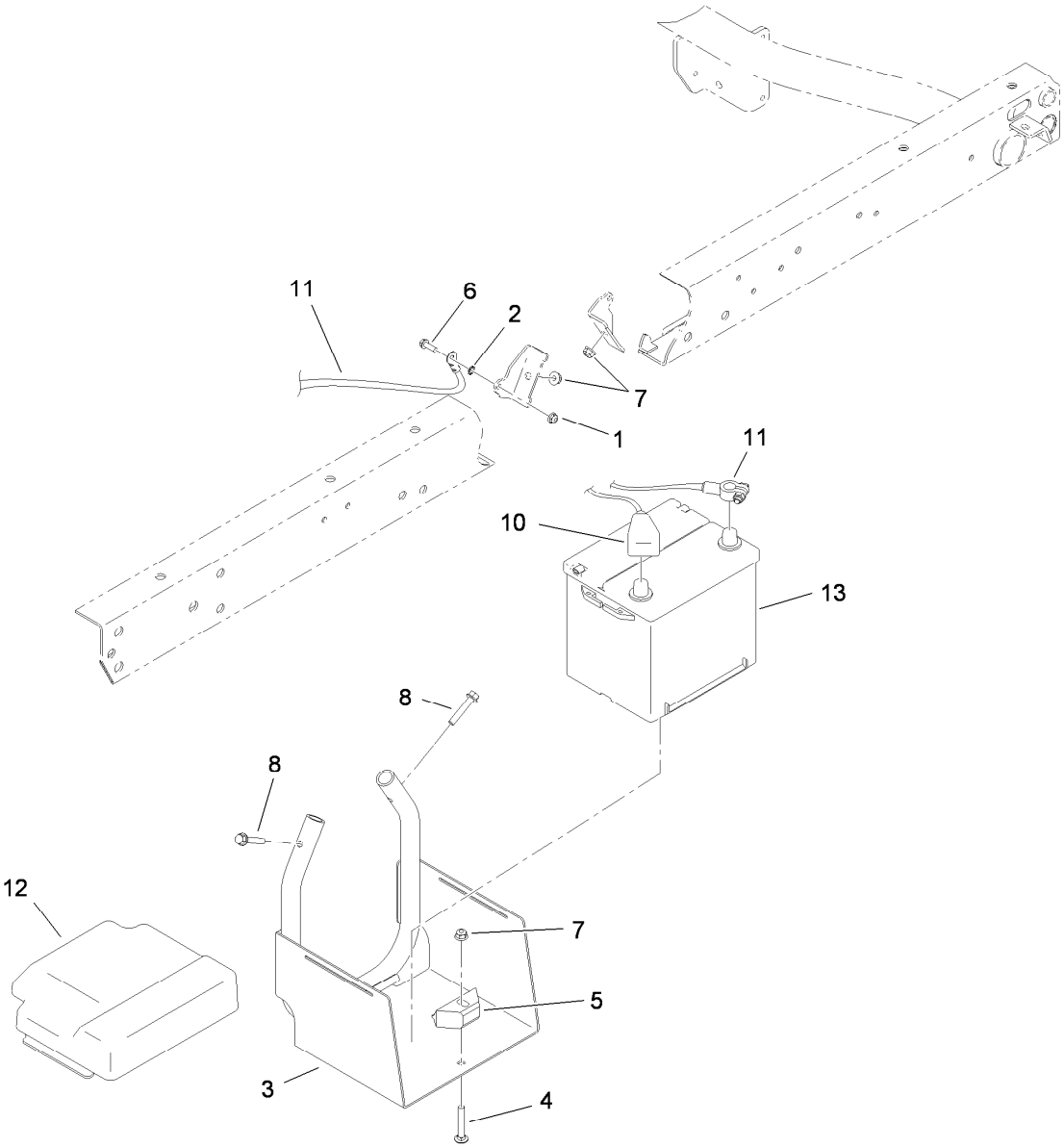


# Battery Assembly

| Ref. | Part Number | Qty. | Description |
|---|---|---|---|
| 1 | 104-7201 | 1 | Nut-HF |
| 2 | 3255-8 | 1 | Washer-Lock |
| 3 | 115-2237-03 | 1 | Tray-Battery |
| 4 | 3230-6 | 1 | Screw-CARR |
| 5 | 66-2490 | 1 | Retainer-Battery |
| 6 | 32105-15 | 1 | Screw-HWH |
| 7 | 104-8300 | 3 | Nut-HF, NI |
| 8 | 94-5780 | 2 | Screw-HWH |
| 10 | 87-8000 | 1 | Cable-Battery, Positive |
| 11 | 115-8122 | 1 | Cable-Battery, Negative |
| 12 | 115-2448 | 1 | Cover-Battery |
| 13 | 106-5187 | 1 | Battery-Dry |

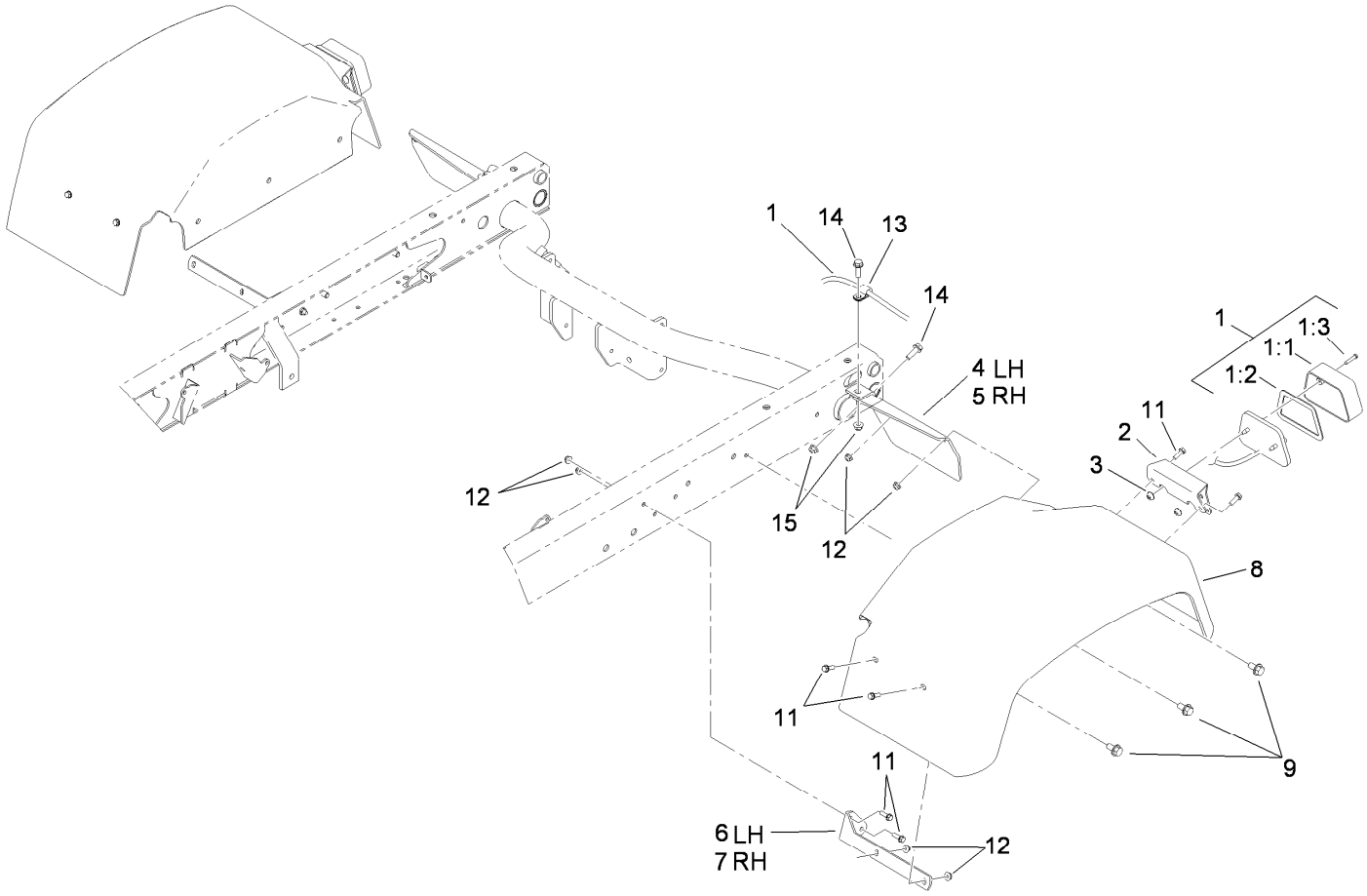


# Tail Light and Fender Assembly

| Ref. | Part Number | Qty. | Description |
|---|---|---|---|
| 1 | 115-7745 | 2 | Light-Tail, Brake |
| 1:1 | 87-6300 | 1 | Lens-Light, Tail |
| 1:2 | 87-6310 | 1 | Gasket-Light, Tail |
| 1:3 | 32144-93 | 2 | Screw-PPHTF |
| 2 | 115-2289-03 | 2 | Bracket-Light, Tail |
| 3 | 3290-506 | 4 | Palnut |
| 4 | 93-8943-03 | 1 | Bracket-Fender, Rear (LH) |
| 5 | 93-8944-03 | 1 | Bracket-Fender, Rear (RH) |
| 6 | 93-8941-03 | 1 | Bracket-Fender, Front (LH) |
| 7 | 93-8942-03 | 1 | Bracket-Fender, Front (RH) |
| 8 | 87-6660 | 2 | Fender-Rear |
| 9 | 110-9380 | 6 | Screw-HWH |
| 11 | 32105-15 | 12 | Screw-HWH |
| 12 | 104-7201 | 12 | Nut-HF |
| 13 | 2412-93 | 2 | Clamp-R |
| 14 | 3234-17 | 4 | Screw-HHF |
| 15 | 104-8300 | 4 | Nut-HF, NI |

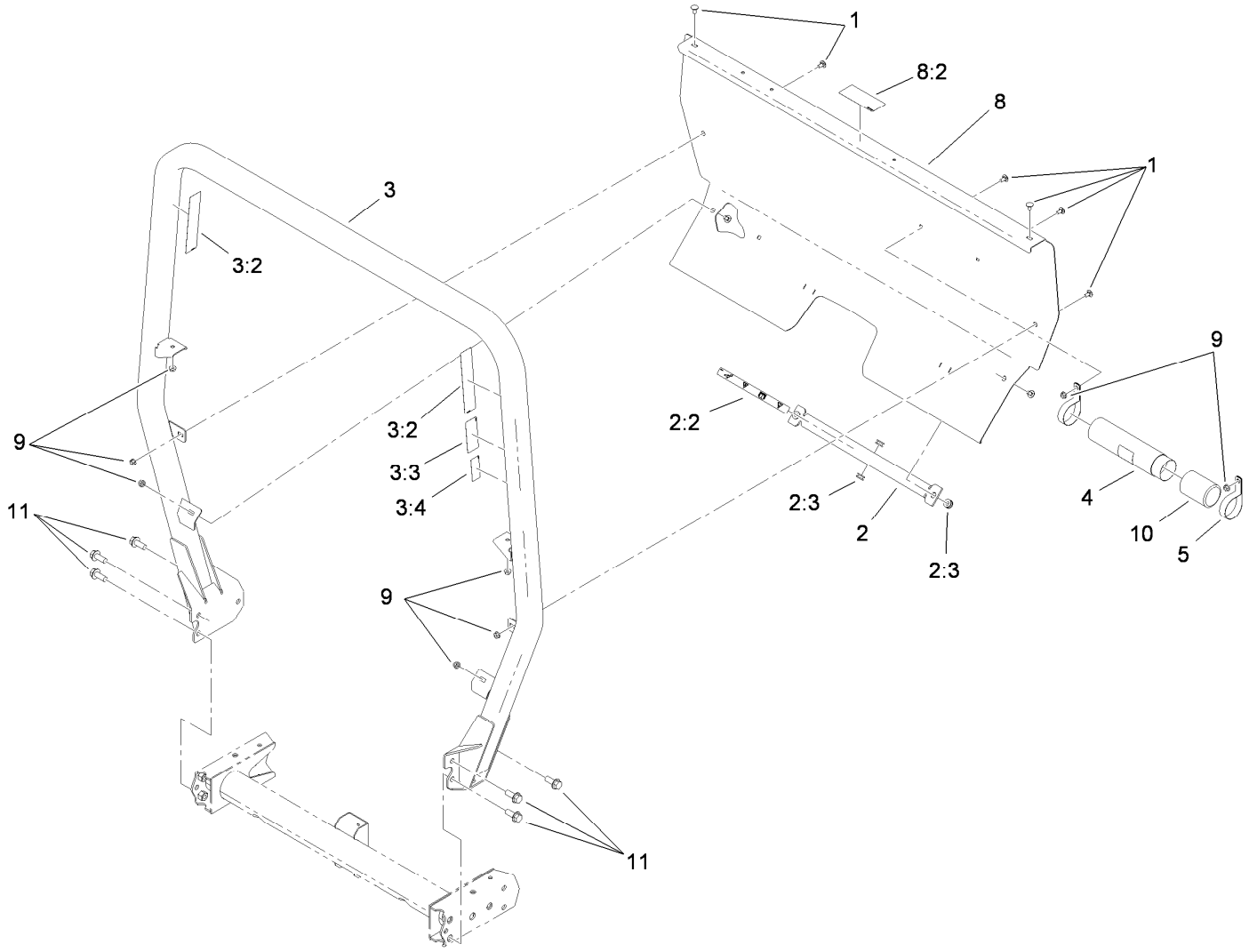


# Roll-Over Protection System Assembly

| *Ref.* | *Part Number* | *Qty.* | *Description* |
|---|---|---|---|
| 1 | 3230-18 | 8 | Screw-CARR |
| 2 | 105-7960 | 1 | Bed Support ASM |
| 2:2 | 93-9852 | 1 | Decal-Warning |
| 2:3 | 92-5972 | 4 | Grommet-Rubber |
| 3 | 115-7910 | 1 | ROPS ASM |
| 3:2 | 106-7767 | 2 | Decal-ROPS |
| 3:3 | 93-9850 | 1 | Decal-ROPS, CE |
| 3:4 | 117-4969 | 1 | Decal-ROPS, ISO |
| 4 | 104-7050 | 1 | Tube-Manual |
| 5 | 2412-133 | 2 | Clamp-R |
| 8 | 115-2213 | 1 | ROPS Cover ASM |
| 8:2 | 105-4215 | 1 | Decal-Caution |
| 9 | 32128-20 | 8 | Nut-HF |
| 10 | 104-7048 | 1 | Cap-Housing |
| 11 | 3234-38 | 6 | Screw-HHF |

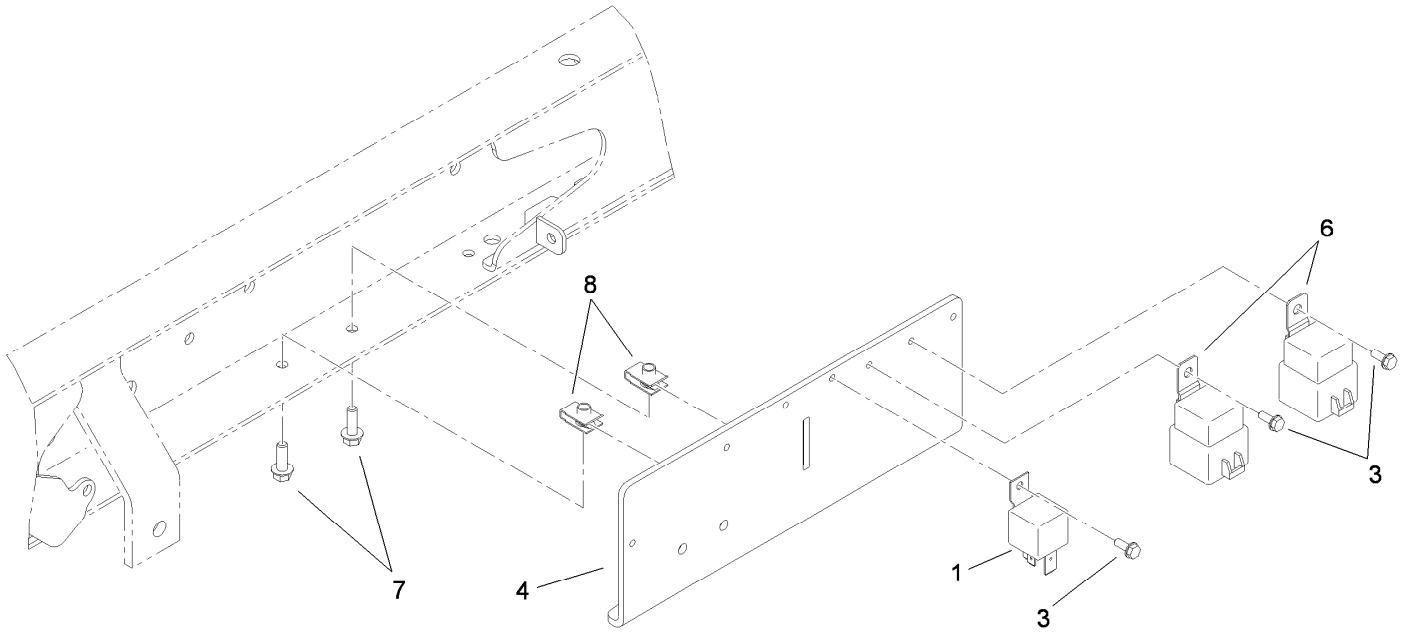


# Relay Assembly

| Ref. | Part Number | Qty. | Description |
|---|---|---|---|
| 1 | 99-7435 | 1 | Relay-Power |
| 3 | 32144-112 | 3 | Screw-HWH |
| 4 | 115-2225 | 1 | Bracket-Relay |
| 6 | 99-7430 | 2 | Relay |
| 7 | 3234-4 | 2 | Screw-HHF |
| 8 | 107069 | 2 | Clip |

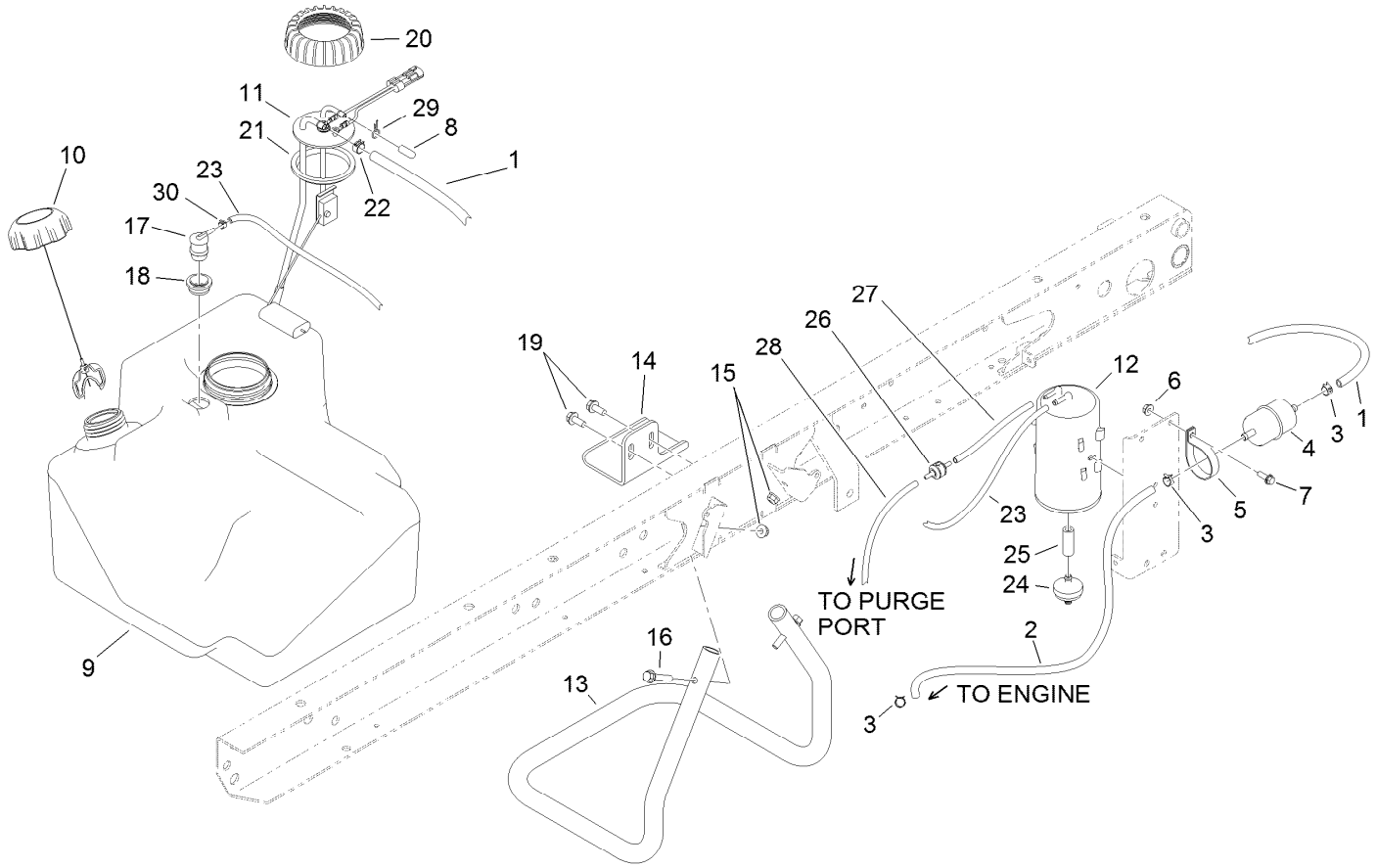


# Fuel System Assembly

| Ref. | Part Number | Qty. | Description |
|---|---|---|---|
| 1 | 110-3372 | 1 | Hose-Fuel |
| 2 | 109-0281 | 1 | Hose-Fuel |
| 3 | 2412-98 | 3 | Clamp-Hose |
| 4 | 108-3854 | 1 | Filter-Fuel |
| 5 | 2412-148 | 1 | Clamp-R |
| 6 | 32128-33 | 1 | Nut-HF |
| 7 | 3234-4 | 1 | Screw-HHF |
| 8 | 115-2403 | 1 | Cap |
| 9 | 119-0735 | 1 | Tank-Fuel |
| 10 | 115-7788 | 1 | Cap-Fuel |
| 11 | 114-8348 | 1 | Sender-Fuel |
| 12 | 115-2251 | 1 | Canister-Carbon |
| 13 | 115-7767-03 | 1 | Tube-Support |
| 14 | 114-8404 | 1 | Plate-Retainer |
| 15 | 104-8300 | 2 | Nut-HF, NI |

| Ref. | Part Number | Qty. | Description |
|---|---|---|---|
| 16 | 94-5780 | 2 | Screw-HWH |
| 17 | 114-0285 | 1 | Valve-Rollover |
| 18 | 114-0284 | 1 | Grommet |
| 19 | 32144-11 | 2 | Screw-HWHTF |
| 20 | 115-2162 | 1 | Cap-Pump, Fuel |
| 21 | 115-2163 | 1 | Gasket-Pump, Fuel |
| 22 | 92-2379 | 1 | Clamp-Hose |
| 23 | 110-3254 | 1 | Hose-Fuel |
| 24 | 115-7854 | 1 | Filter-Fuel, Inline |
| 25 | 106-5317 | 1 | Hose-Fuel |
| 26 | 115-7868 | 1 | Valve-Check, Vacuum |
| 27 | 115-7871 | 1 | Hose-Fuel |
| 28 | 115-7872 | 1 | Hose-Fuel |
| 29 | 2412-79 | 1 | Clamp-Hose |
| 30 | 2412-146 | 1 | Clamp-Hose |

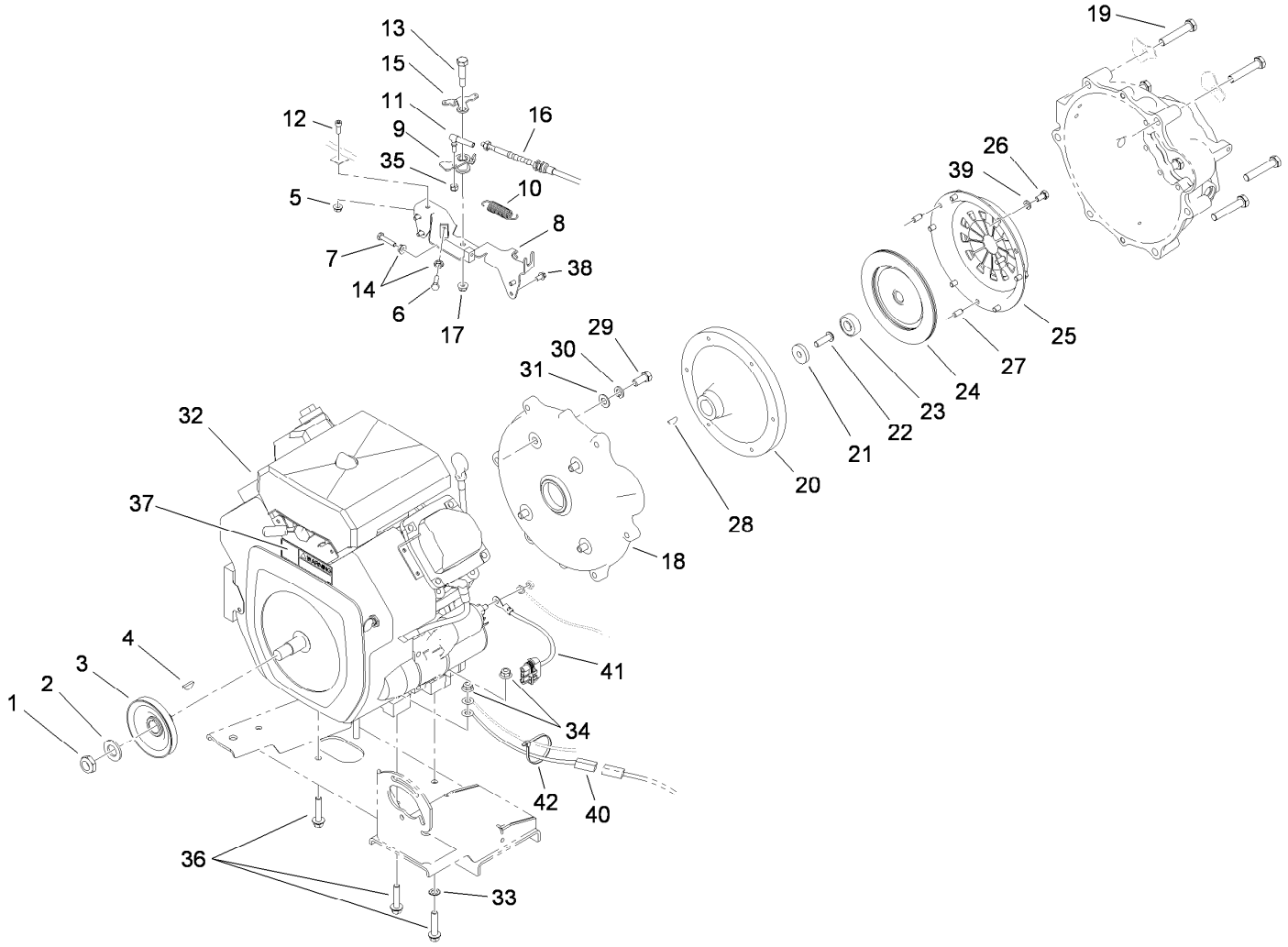


# Engine Assembly

| Ref. | Part Number | Qty. | Description |
|---|---|---|---|
| 1 | 3296-15 | 1 | Nut-Lock, NI |
| 2 | 3256-28 | 1 | Washer-Flat |
| 3 | 87-7710 | 1 | Pulley ASM |
| 4 | 3257-7 | 1 | Key-Woodruff |
| 5 | 32128-33 | 1 | Nut-HF |
| 6 | 329-6 | 1 | Screw-HH |
| 7 | 329-7 | 1 | Screw-HH |
| 8 | 87-7780-03 | 1 | Bracket-Throttle |
| 9 | 87-7800 | 1 | Lever-Throttle |
| 10 | 67-1450 | 1 | Spring-Idler |
| 11 | 18-1720 | 1 | Ball Joint |
| 12 | 3274-15 | 1 | Screw-HSH |
| 13 | 7-0030 | 1 | Screw-Shoulder, HH |
| 14 | 3220-1 | 2 | Nut-Jam |
| 15 | 87-7790 | 1 | Lever-Choke |
| 16 | 115-2286 | 1 | Cable-Accelerator |
| 17 | 104-8300 | 1 | Nut-HF, NI |
| 18 | 107-7991 | 1 | Adapter-Clutch |

| Ref. | Part Number | Qty. | Description |
|---|---|---|---|
| 19 | 107-7983 | 6 | Screw-HH |
| 20 | 87-6480 | 1 | Flywheel |
| 21 | 87-6080 | 1 | Washer |
| 22 | 3274-63 | 1 | Screw-HSBH |
| 23 | 87-6460 | 1 | Bearing-Ball (W/Seal) |
| 24 | 104-9219 | 1 | Disc-Clutch |
| 25 | 104-9231 | 1 | Plate-Pressure, Clutch |
| 26 | 33114-016 | 6 | Screw-HH |
| 27 | 42-7160 | 3 | Pin |
| 28 | 3257-5 | 1 | Key-Woodruff |
| 29 | 324-4 | 4 | Screw-HH |
| 30 | 3253-6 | 4 | Washer-Lock |
| 31 | 3256-25 | 4 | Washer-Flat |
| 32 | 115-7819 | 1 | Engine-Kohler, Ch680-3025 |
| 32:1 | 108-3847 | 1 | Filter-Oil ● |
| 33 | 3255-9 | 1 | Washer-Lock |
| 34 | 104-8301 | 4 | Nut-HF, NI |
| 35 | 3296-3 | 1 | Nut-Lock |

● Not illustrated

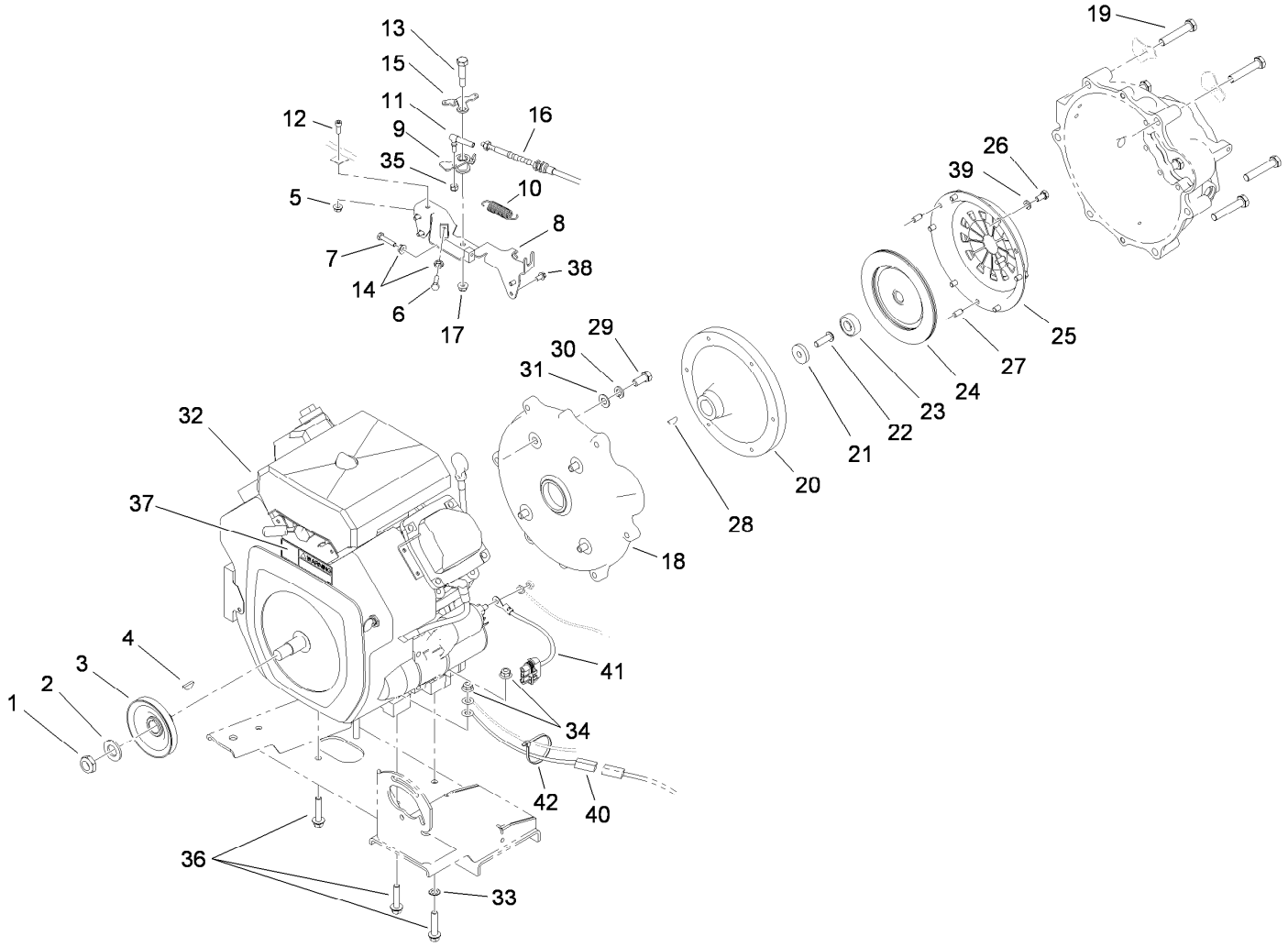


# Engine Assembly (continued)

| Ref. | Part Number | Qty. | Description |
|---|---|---|---|
| 36 | 3234-19 | 4 | Screw-HHF |
| 37 | 80-8040 | 1 | Decal-Warning |
| 38 | 32144-4 | 4 | Screw-HWH |
| 39 | 3253-4 | 6 | Washer-Lock |

| Ref. | Part Number | Qty. | Description |
|---|---|---|---|
| 40 | 117-5612 | 1 | Harness-Wire, Ground |
| 41 | 99-3441 | 1 | Harness-Wire, Fusible Link |
| 42 | 3290-379 | 1 | Tie-Cable |

● Not illustrated

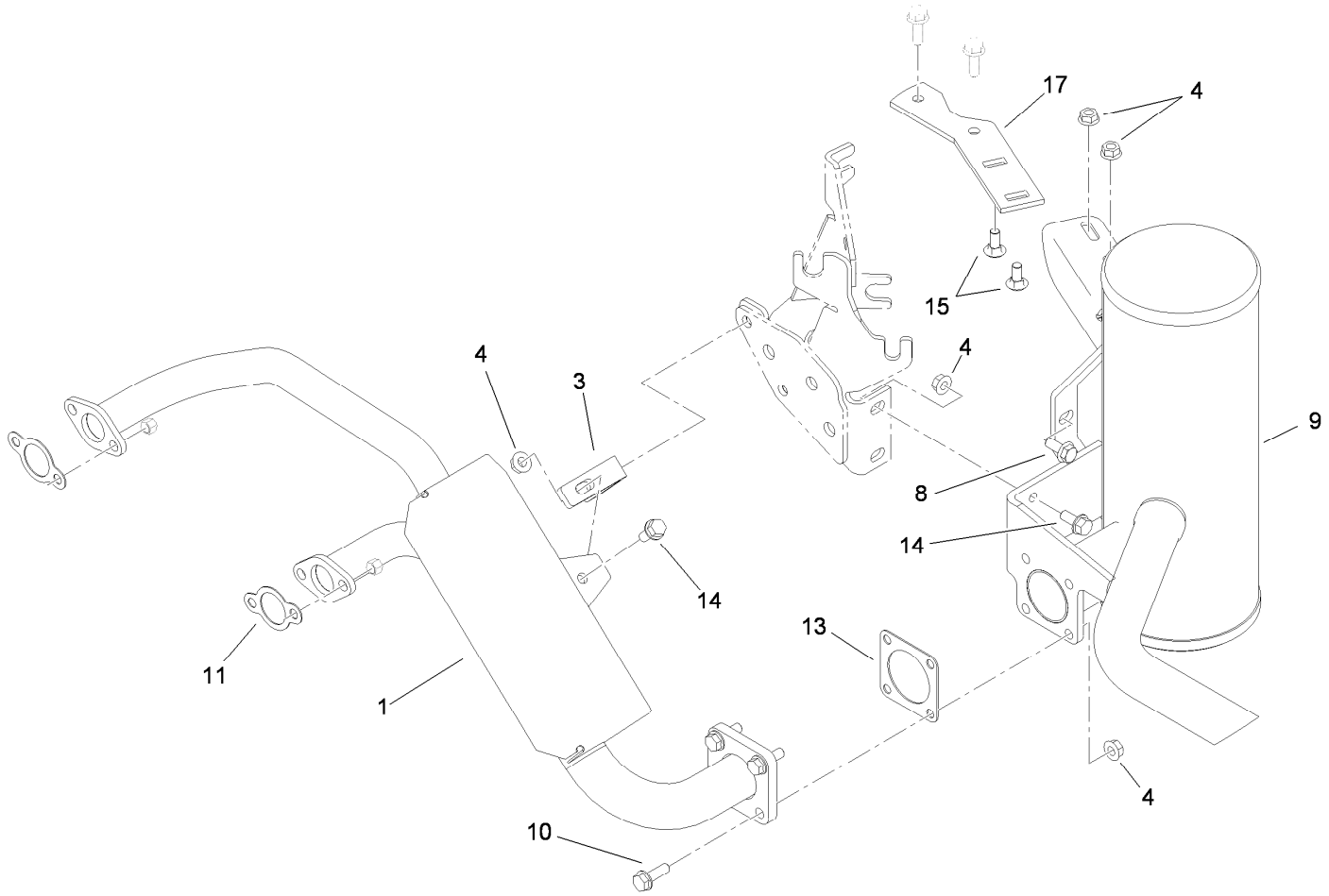


# Muffler Assembly

| Ref. | Part Number | Qty. | Description |
|---|---|---|---|
| 1 | 106-7855 | 1 | Manifold-Cooled, Air |
| 3 | 106-7880-03 | 1 | Mount-Angle |
| 4 | 32128-20 | 9 | Nut-HF |
| 8 | 98-7977 | 1 | Screw-HHF |
| 9 | 115-7725 | 1 | Muffler |
| 10 | 3234-17 | 4 | Screw-HHF |
| 11 | 93-0350 | 2 | Gasket-Exhaust |
| 13 | 105-4209 | 1 | Gasket-Muffler |
| 14 | 3234-5 | 3 | Screw-HHF |
| 15 | 3230-1 | 2 | Bolt-CARR |
| 17 | 105-9472 | 1 | Plate-Mount, Muffler |

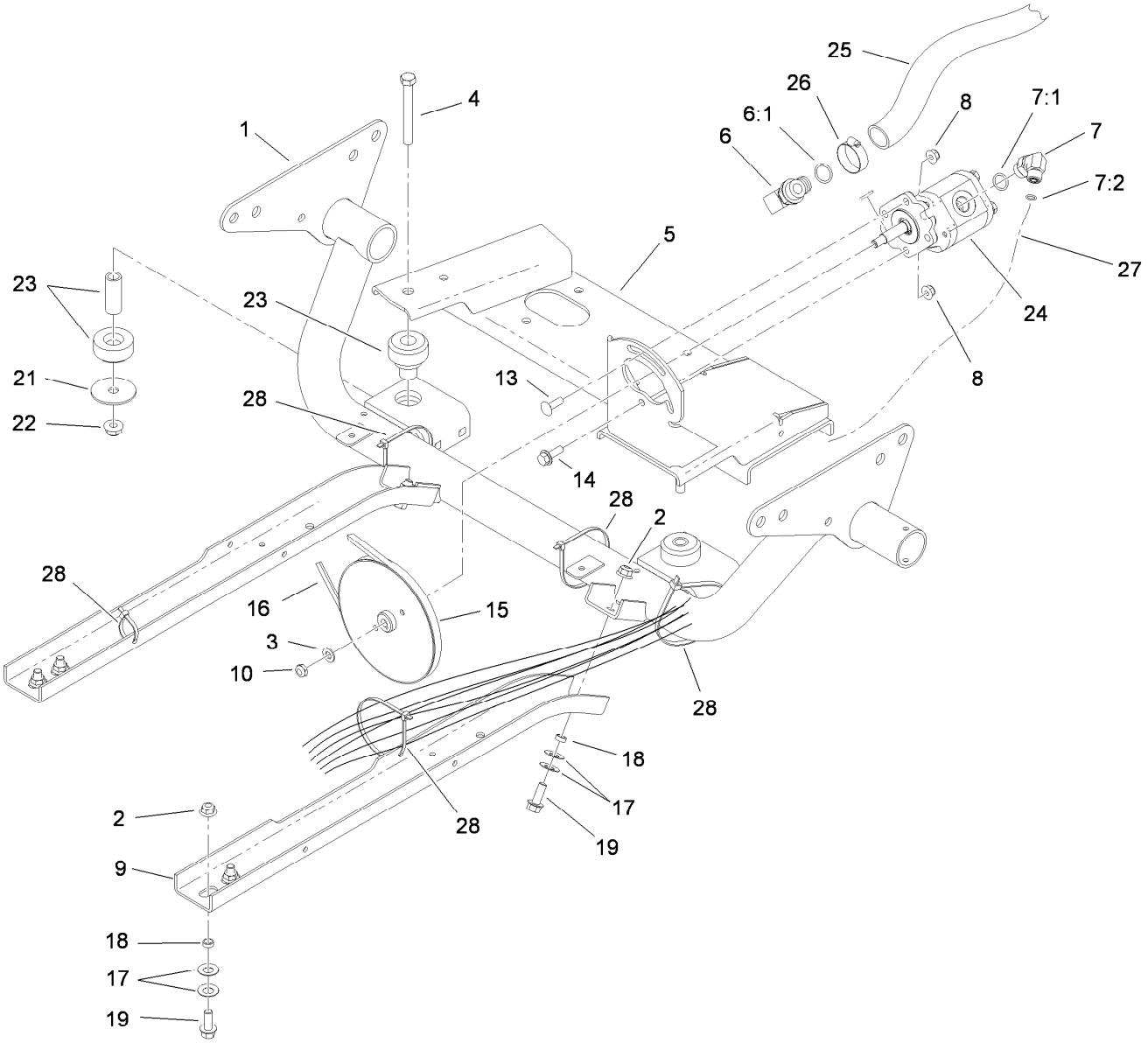


# Engine Support Assembly

| Ref. | Part Number | Qty. | Description |
|---|---|---|---|
| 1 | 115-2257-03 | 1 | Engine Support ASM |
| 2 | 104-8301 | 6 | Nut-HF, NI |
| 3 | 3256-45 | 1 | Washer-Flat |
| 4 | 324-13 | 2 | Screw-HH |
| 5 | 115-2352-03 | 1 | Engine Mount ASM |
| 6 | 87-8170 | 1 | Fitting |
| 6:1 | 237-80 | 1 | O-Ring |
| 7 | 340-18 | 1 | Fitting-HYD, 90 DEG |
| 7:1 | 237-79 | 1 | O-Ring |
| 7:2 | 237-22 | 1 | O-Ring |
| 8 | 104-8300 | 2 | Nut-HF, NI |
| 9 | 87-4730-03 | 2 | Guard-Belly |
| 10 | 3296-5 | 1 | Nut-Hex |
| 13 | 3230-22 | 1 | Screw-CARR |

| Ref. | Part Number | Qty. | Description |
|---|---|---|---|
| 14 | 3234-29 | 1 | Screw-HHF |
| 15 | 87-7740 | 1 | Pulley |
| 16 | 87-8370 | 1 | V-Belt |
| 17 | 3290-413 | 12 | Washer-Belleville |
| 18 | 76-9100 | 6 | Spacer |
| 19 | 3234-11 | 6 | Screw-HHF |
| 21 | 87-5100 | 2 | Washer-Snubbing |
| 22 | 114-8417 | 2 | Nut-HF, NI |
| 23 | 106-7865 | 2 | Mount-Engine |
| 24 | 112-2983 | 1 | Pump-Gear, Hydraulic |
| 25 | 87-8030 | 1 | Hose-Suction |
| 26 | 2412-129 | 1 | Clamp-Hose |
| 27 | 95-0965 | 1 | Hose ASM |
| 28 | 3290-379 | 5 | Tie-Cable |

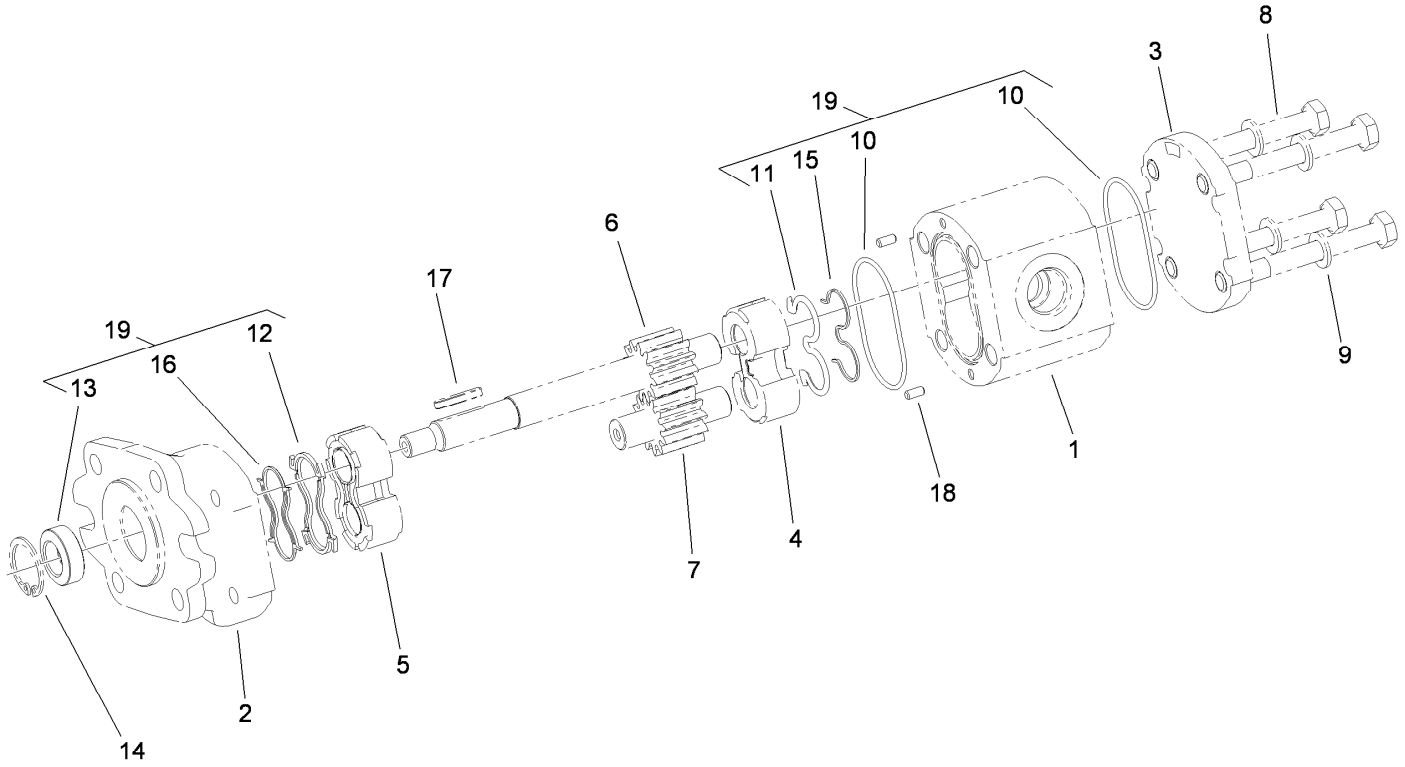


# Hydraulic Gear Pump Assembly No. 112-2983

| Ref. | Part Number | Qty. | Description |
|---|---|---|---|
| 1 | | 1 | Body ● |
| 2 | | 1 | Cover-Front ● |
| 3 | | 1 | Cover-Rear ● |
| 4 | | 1 | Plate-Thrust ● |
| 5 | | 1 | Plate-Thrust, Upper ● |
| 6 | | 1 | Shaft-Drive ● |
| 7 | | 1 | Gear-Driven ● |
| 8 | | 4 | Screw-HH ● |
| 9 | | 4 | Washer ● |
| 10 | | 2 | O-Ring Seal ● |

| Ref. | Part Number | Qty. | Description |
|---|---|---|---|
| 11 | | 1 | Seal ● |
| 12 | | 1 | Seal-Upper ● |
| 13 | | 1 | Seal-Shaft ● |
| 14 | | 1 | Ring-Clip ● |
| 15 | | 1 | Seal-Extrusion, Anti ● |
| 16 | | 1 | Seal-Extrusion, Anti ● |
| 17 | 115-7856 | 1 | Key-Square |
| 18 | | 1 | Pin-Dowel ● |
| 19 | 112-0199 | 1 | Seal Kit |

● Not serviced separately

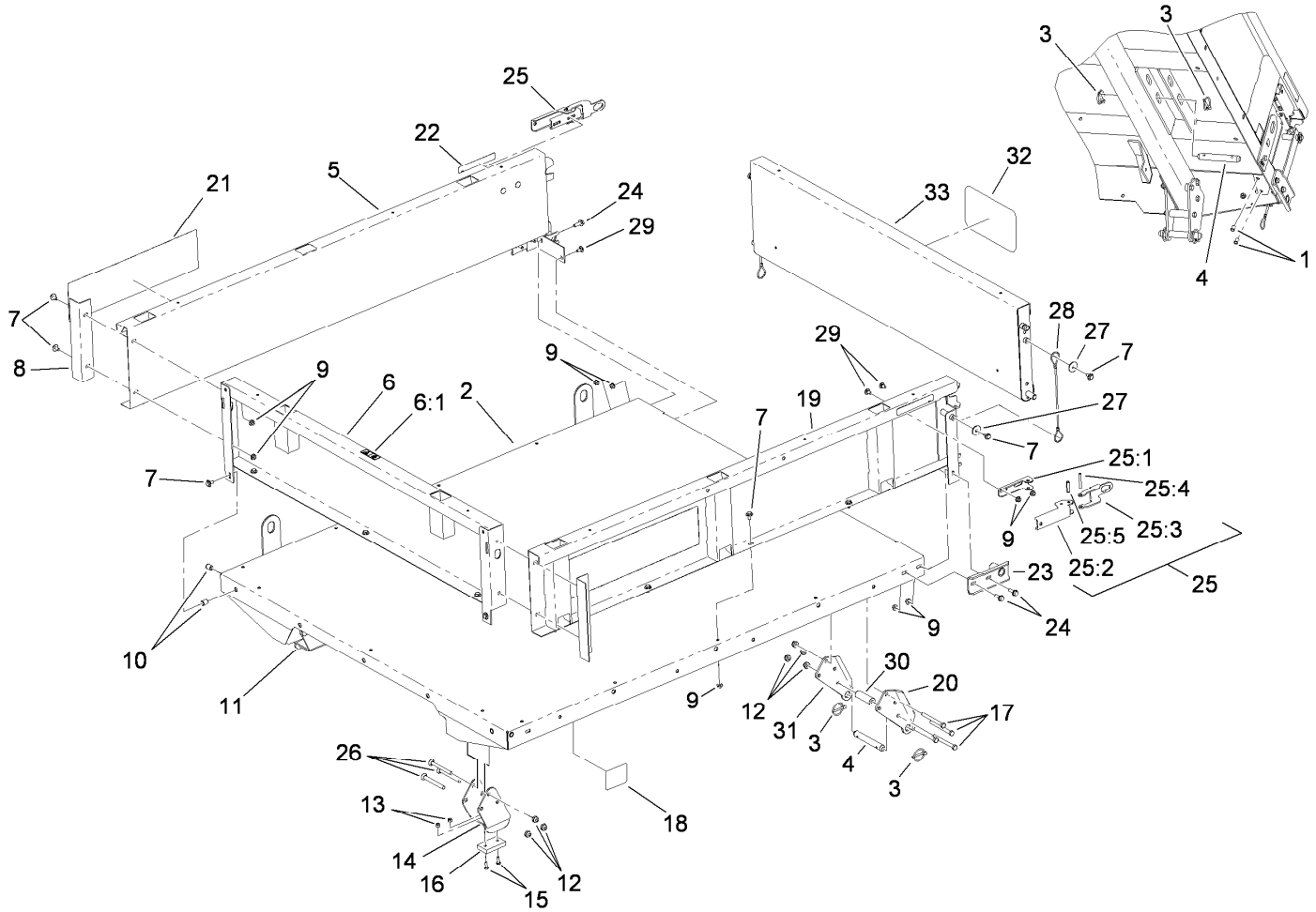


# Full Bed and Side Panel Assembly

| Ref. | Part Number | Qty. | Description |
|---|---|---|---|
| 1 | 32148-6 | 4 | Insert-Nut |
| 2 | 93-9724-03 | 1 | Flatbed-Full |
| 3 | 92-1298 | 8 | Pin-Lynch |
| 4 | 92-1233 | 4 | Pin-Clevis |
| 5 | 92-1255-03 | 1 | Panel-Side, RH |
| 6 | 92-5982 | 1 | Front Panel ASM |
| 6:1 | 115-7739 | 1 | Decal-No Riders |
| 7 | 3234-7 | 21 | Screw-HHF |
| 8 | 92-1320-03 | 2 | Angle-Side |
| 9 | 32128-20 | 27 | Nut-HF |
| 10 | 32148-7 | 4 | Nut-Insert |
| 11 | 106-2423-03 | 1 | Bracket-Spacer, RH |
| 12 | 3296-44 | 14 | Nut-Lock, NI |
| 13 | 3296-42 | 4 | Nut-Lock, NI |
| 14 | 106-2422-03 | 1 | Bracket-Spacer, LH |
| 15 | 3250-45 | 4 | Screw-SPH |
| 16 | 93-9719 | 2 | Block-Wear |
| 17 | 323-42 | 8 | Screw-HH |
| 18 | 93-9899 | 2 | Decal-Warning |
| 19 | 92-1248-03 | 1 | Panel-Side, LH |

| Ref. | Part Number | Qty. | Description |
|---|---|---|---|
| 20 | 93-9720-03 | 2 | Bracket-Pivot, Long (LH) |
| 21 | 115-7913 | 2 | Decal |
| 22 | 93-9868 | 2 | Decal-Caution |
| 23 | 92-1265-03 | 2 | Bracket-Pivot |
| 24 | 3234-29 | 6 | Screw-HHF |
| 25 | 99-1123 | 2 | Latch ASM |
| 25:1 | 92-1271 | 1 | Pivot-Latch |
| 25:2 | 99-1113 | 1 | Handle-Latch |
| 25:3 | 99-1112 | 1 | Plate-Retainer |
| 25:4 | 32121-78 | 1 | Pin-Roll |
| 25:5 | 32121-25 | 1 | Pin-Roll |
| 26 | 3231-24 | 6 | Screw-CARR |
| 27 | 3256-57 | 4 | Washer-Flat |
| 28 | 93-9595 | 2 | Lanyard |
| 29 | 3230-18 | 6 | Screw-CARR |
| 30 | 93-9575 | 2 | Tube-Pivot, Flatbed |
| 31 | 93-9721-03 | 2 | Bracket-Pivot, Long (RH) |
| 32 | 105-4222 | 1 | Decal |
| 33 | 92-1259-03 | 1 | Tailgate-Rear |

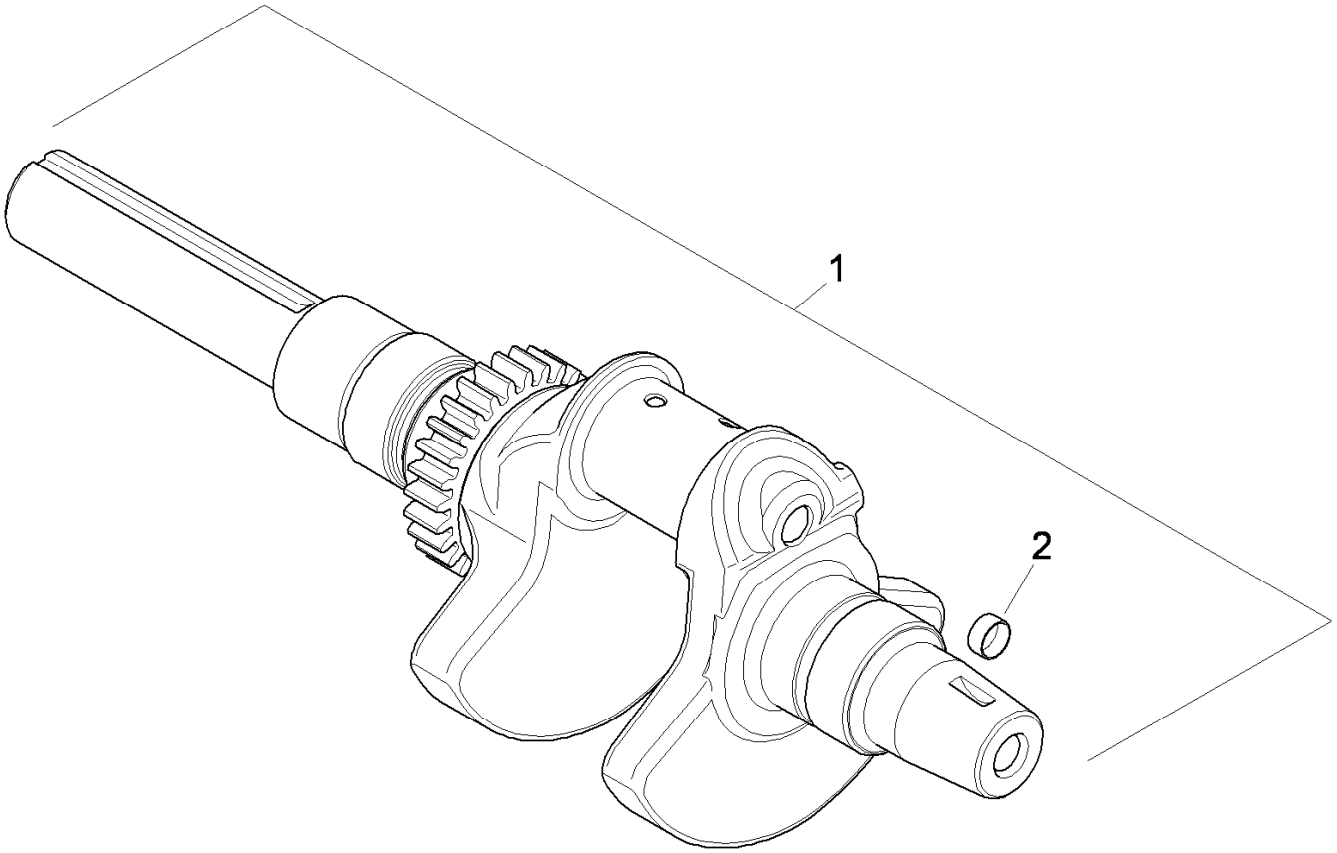


# Crankshaft Assembly
# Kohler CH680-3025A

| *Ref.* | *Part Number* | *Qty.* | *Description* |
|---|---|---|---|
| 1 | 24 014 26-S | 1 | Crankshaft (Includes 2) ● |
| 2 | 52 139 09-S | 1 | Plug-Cup ● |

● Obtain parts from www.kohlerplus.com

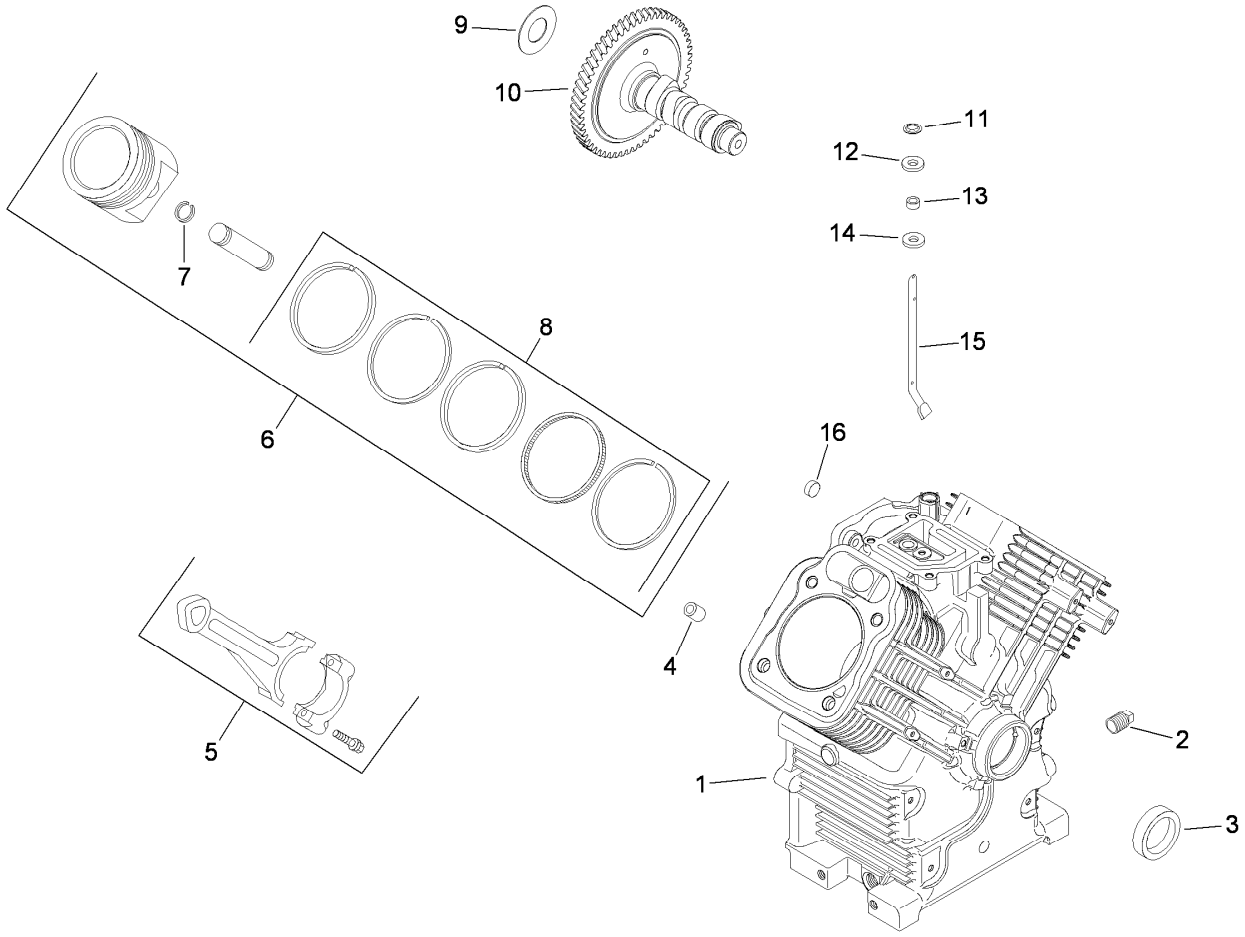


# Crankcase Assembly
# Kohler CH680-3025A

| Ref. | Part Number | Qty. | Description |
|---|---|---|---|
| 1 | 24 782 27 | 1 | Miniblock ASM ■ |
| 1 | 24 522 301 | 1 | Short Block ASM ■ |
| 2 | 25 139 57-S | 2 | Plug-Pipe, Sq HD (3/8) ■ |
| 3 | 24 032 19-S | 1 | Seal-Oil (Helix Lip) ■ |
| 4 | 24 380 16-S | 6 | Pin-Locating ■ |
| 5 | 24 067 24-S | 2 | Rod-Connecting (STD) ■ |
| 5 | 24 067 25-S | 2 | Rod-Connecting (.25) ■ |
| 6 | 24 874 34-S | 2 | Piston W/Ring Set (STD, 80Mm) (Includes Ref 7, 8) ■ |
| 6 | 24 874 35-S | 2 | Piston W/Ring Set (.08) (Includes Ref 7, 8) ■ |
| 6 | 24 874 36-S | 2 | Piston W/Ring Set (.25) (Includes Ref 7, 8) ■ |
| 6 | 24 874 37-S | 2 | Piston W/Ring Set (.50) (Includes Ref 7, 8) ■ |
| 7 | 24 018 01-S | 4 | Retainer-Pin, Piston ■ |
| 8 | 24 108 18-S | 2 | Piston Ring Set (STD) ■ |
| 8 | 24 108 19-S | 2 | Piston Ring Set (.08) ■ |
| 8 | 24 108 20-S | 2 | Piston Ring Set (.25) ■ |
| 8 | 24 108 21-S | 2 | Piston Ring Set (.50) ■ |
| 9 | 12 422 07-S | 1 | Shim-Camshaft (White .028) ■ |
| 9 | 12 422 08-S | 1 | Shim-Camshaft (Blue .03) ■ |
| 9 | 12 422 09-S | 1 | Shim-Camshaft (Red .032) ■ |
| 9 | 12 422 10-S | 1 | Shim-Camshaft (Yellow .034) ■ |
| 9 | 12 422 11-S | 1 | Shim-Camshaft (Green .036) ■ |
| 9 | 12 422 12-S | 1 | Shim-Camshaft (Gray .038) ■ |
| 9 | 12 422 13-S | 1 | Shim-Camshaft (Black .04) ■ |
| 10 | 24 012 10-S | 1 | Camshaft Kit ■ |
| 11 | 24 018 09-S | 1 | Retainer-Ring ■ |
| 12 | M-931010-S | 1 | Washer-Flat (9Mm) ■ |
| 13 | 28 032 09-S | 1 | Seal-Cross Shaft, Governor ■ |
| 14 | 24 468 15-S | 1 | Washer-Flat (11/32) ■ |
| 15 | 24 144 38-S | 1 | Shaft-Cross, Governor ■ |
| 16 | 52 139 09-S | 1 | Plug-Cup ■ |
| | 25 357 14-S | 1 | Lubricant-Camshaft ■ ● |
| | 24 755 108-S | 1 | Gasket Set ■ ● |

● Not illustrated

■ Obtain parts from www.kohlerplus.com

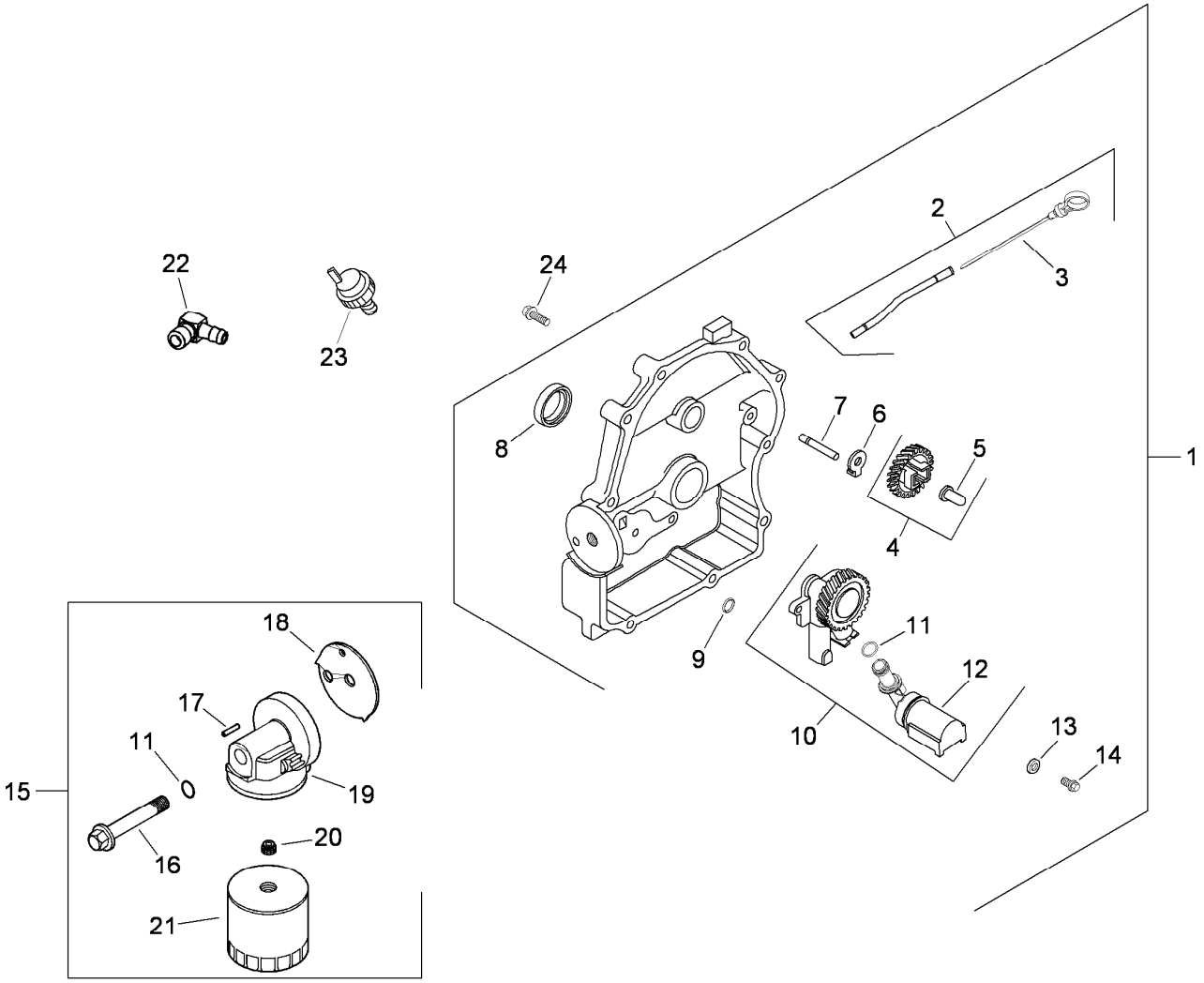


# Oil Pan and Lubrication Assembly
# Kohler CH680-3025A

| Ref. | Part Number | Qty. | Description |
|---|---|---|---|
| 1 | 24 009 167-S | 1 | Closure Plate And Bearing ASM (Includes Ref 2-14) ● |
| 2 | 24 755 121-S | 1 | Dipstick And Dipstick Tube ASM (Includes Ref 3) ● |
| 3 | 24 038 10-S | 1 | Dipstick ● |
| 4 | 24 043 12-S | 1 | Governor Gear W/Pin Kit (Includes Ref 5) ● |
| 5 | 12 380 01-S | 1 | Pin-Regulating, Governor ● |
| 6 | 24 448 02-S | 1 | Tab-Locking ● |
| 7 | 12 144 02-S | 1 | Shaft-Gear, Governor ● |
| 8 | 25 032 06-S | 1 | Seal-Oil ● |
| 9 | 24 153 08-S | 1 | O-Ring ● |
| 10 | 24 393 51-S | 1 | Oil Pump ASM (Includes Ref 11, 12) ● |
| 11 | 24 153 01-S | 2 | O-Ring ● |
| 12 | 24 381 04-S | 1 | Tube-Pick Up, Oil ● |
| 13 | M-631005-S | 2 | Washer-Flat (6 Mm) ● |
| 14 | M-645025-S | 2 | Screw-Flange, Thread Forming (M6X1.0X25) ● |
| 15 | 24 702 01-S | 1 | Oil Filter Base Kit (Includes Ref 11, 16-21) ● |
| 16 | 24211 01-S | 1 | Bolt-Adapter, Oil Filter ● |
| 17 | 24 380 09-S | 1 | Pin-Roll ● |
| 18 | 24 041 29-S | 1 | Gasket-Adapter, Oil Filter ● |
| 19 | 24 029 77-S | 1 | Adapter-Filter, Oil ● |
| 20 | 24 136 01-S | 1 | Nipple-Filter, Oil ● |
| 21 | 12 050 01-S | 1 | Filter-Oil ● |
| 22 | 25 155 02-S | 1 | Connector-Hose, 90 Deg ● |
| 23 | 25 099 27-S | 1 | Switch-Pressure, Oil ● |
| 24 | 24 086 17-S | 10 | Screw-Flange (M8X1.25X45) ● |

● Obtain parts from www.kohlerplus.com

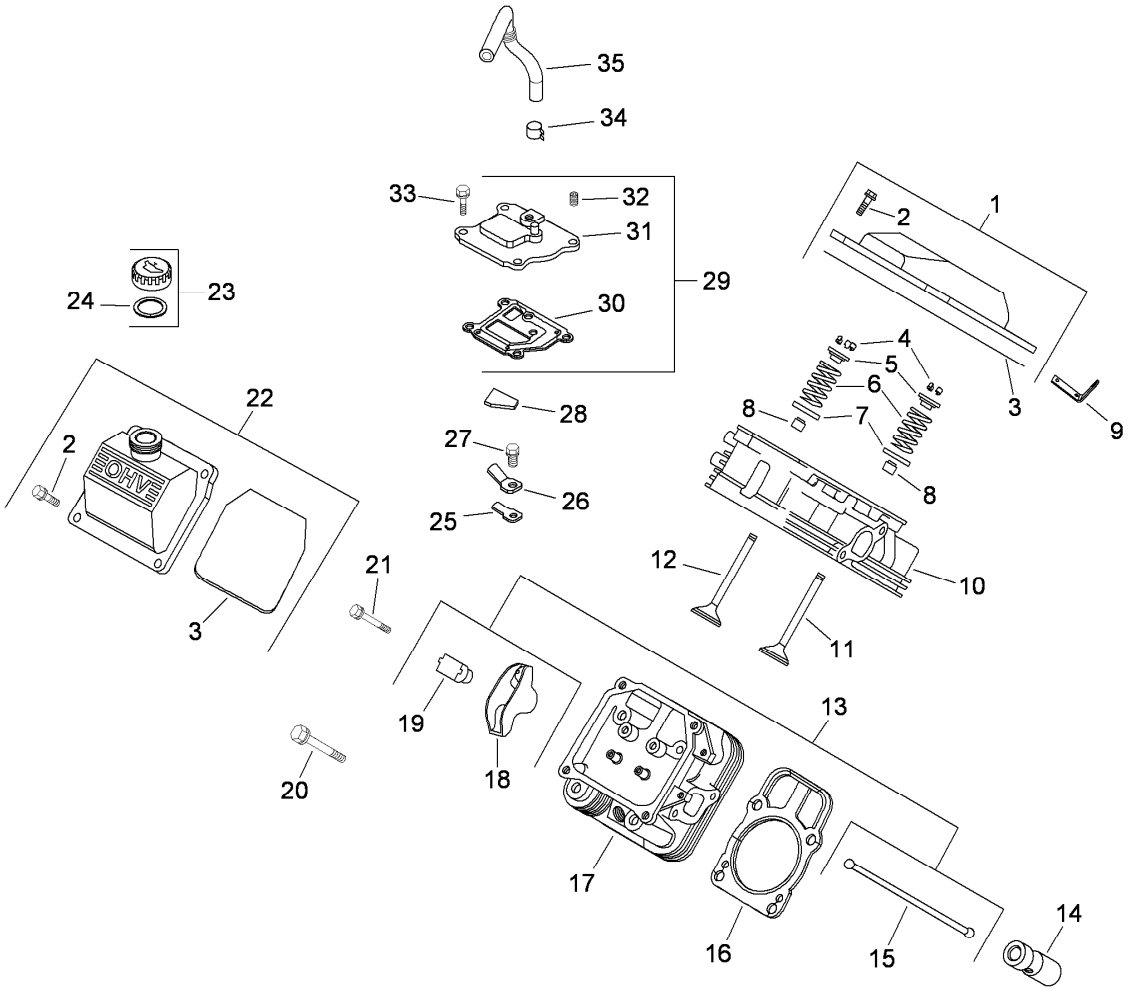


# Head, Valve and Breather Assembly
# Kohler CH680-3025A

| Ref. | Part Number | Qty. | Description |
|---|---|---|---|
| 1 | 24 755 141-S | 1 | Plain Rocker Cover Kit (Includes Ref 2, 3) ■ |
| 2 | M-651030-S | 8 | Screw-Flange (M6X1.0X30) ■ |
| 3 | 24 153 30-S | 2 | O-Ring ■ |
| 4 | 12 755 03-S | 4 | Retainer Kit ■ |
| 5 | 12 173 01-S | 4 | Cap-Spring, Valve ■ |
| 6 | 24 089 02-S | 4 | Spring-Valve ■ |
| 7 | 235011-S | 4 | Retainer-Spring ■ |
| 8 | 66 032 05-S | 2 | Seal-Stem, Valve ■ |
| 9 | 25 445 01-S | 2 | Strap-Lifting ■ |
| 10 | 24 318 107-S | 1 | Cylinder Head ASM (No.1) (Includes 25 072 04-S) ■ |
| 11 | 24 017 01-S | 2 | Valve-Intake (STD) ■ |
| 11 | 24 017 02-S | 2 | Valve-Intake (.25) ■ |
| 12 | 24 016 01-S | 2 | Valve-Exhaust (STD) ■ |
| 12 | 24 016 02-S | 2 | Valve-Exhaust (.25) ■ |
| 13 | 24 755 66-S | 1 | Valve Train Kit (Includes Ref 15, 18, 19) ■ |
| 14 | 25 351 04-S | 4 | Hydraulic Valve Lifter Kit (Includes 25 357 14-S) ■ |
| 15 | 24 411 05-S | 4 | Rod-Push ■ |
| 16 | 24 841 02-S | 2 | Cylinder Head Gasket Kit ■ |
| 17 | 24 318 115-S | 1 | Cylinder Head ASM (No.2) ■ |
| 18 | 25 186 01-S | 4 | Arm-Rocker ■ |
| 19 | 24 599 02-S | 4 | Pivot-Arm, Rocker ■ |
| 20 | 12 086 16-S | 8 | Screw-Flange (M10X1.5X90) ■ |
| 21 | M-640034-S | 4 | Screw-Flange (M6X1.0X34) ■ |
| 22 | 24 755 140-S | 1 | Oil Fill Rocker Cover Kit (Includes Ref 2, 3) ■ |
| 23 | 24 755 46-S | 1 | Oil Fill Cap Kit (Yellow) (Includes Ref 24) ■ |
| 24 | 25 153 02-S | 1 | O-Ring ■ |
| 25 | 24 402 03-S | 1 | Reed-Breather ■ |
| 26 | 66 018 04-S | 1 | Retainer-Reed ■ |
| 27 | M-545010-S | 1 | Screw-HHFTF (M5X.80X10) ■ |
| 28 | 24 050 11-S | 1 | Filter-Breather ■ |
| 29 | 24 033 01-S | 1 | Breather ASM (Includes 30-33) ■ |
| 30 | 24 041 51-S | 1 | Gasket-Breather ■ |
| 31 | 24 096 86-S | 1 | Cover-Breather ■ |
| 32 | 25 139 60-S | 1 | Plug-Pipe, Countersunk (1/8) ■ |

● Not illustrated

■ Obtain parts from www.kohlerplus.com

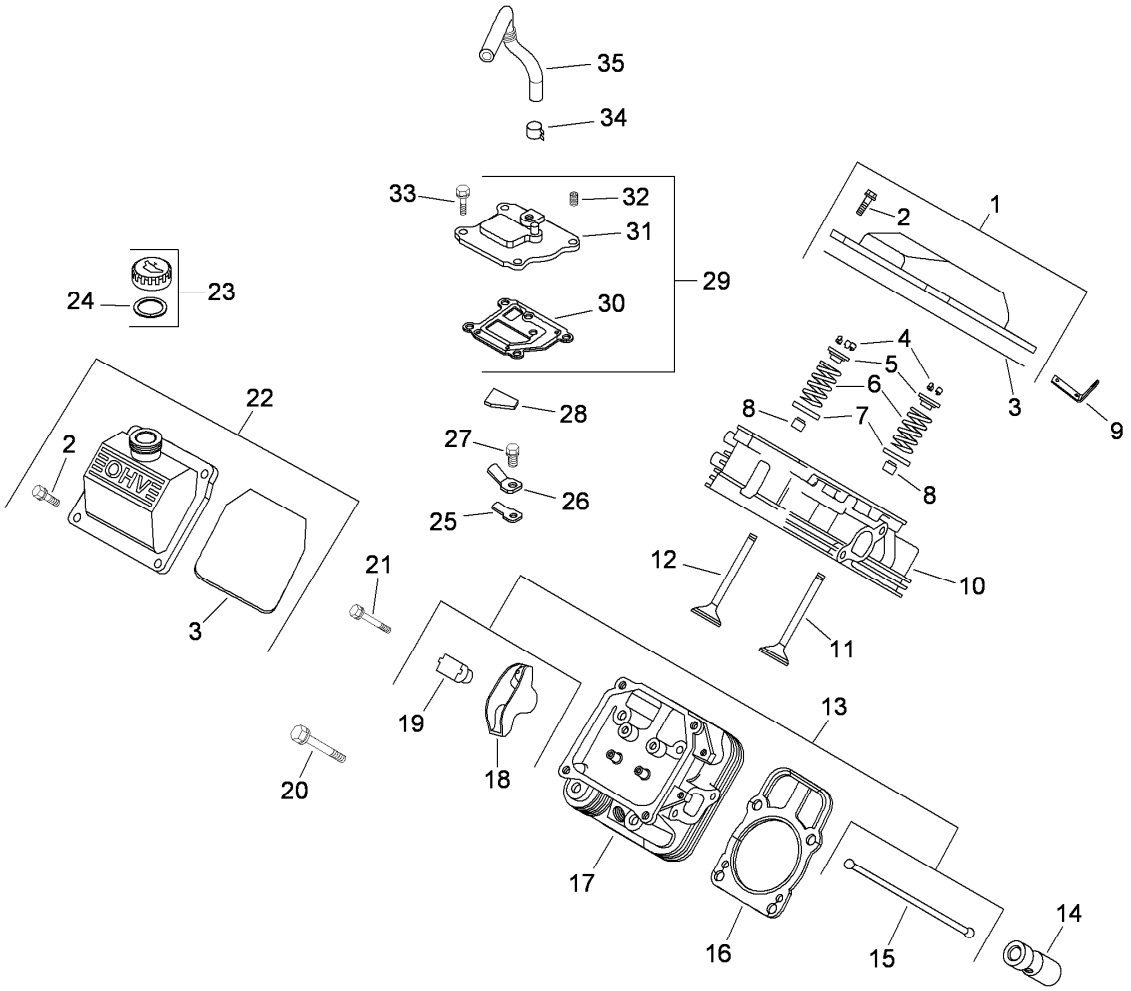


# Head, Valve and Breather Assembly Kohler CH680-3025A (continued)

| Ref. | Part Number | Qty. | Description |
|---|---|---|---|
| 33 | M-645020-S | 4 | Screw-HHFTF (M6X1.0X20) ■ |
| 34 | 25237 14-S | 1 | Clamp-Hose (1/2) ■ |
| 35 | 24 326 89-S | 1 | Hose-Breather ■ |
| | 24 755 147-S | 2 | Cylinder Head Hardware Kit ■● |
| | 25 072 04-S | 2 | Stud (M8X1.25X33) ■● |
| | 24 041 01-S | 1 | Gasket-Manifold, Intake ■● |
| | 24 041 49-S | 1 | Gasket-Exhaust ■● |
| | 24 086 44-S | 4 | Screw-HF ■● |
| | 24 100 10-S | 4 | Nut-Flange (M8X1.25) ■● |
| | 24 153 27-S | 1 | O-Ring (Intake Port) ■● |
| | 24 468 16-S | 4 | Washer-Flat (8.6 Mm) ■● |
| | 25 357 14-S | 1 | Lubricant-Camshaft ■● |

● Not illustrated

■ Obtain parts from www.kohlerplus.com

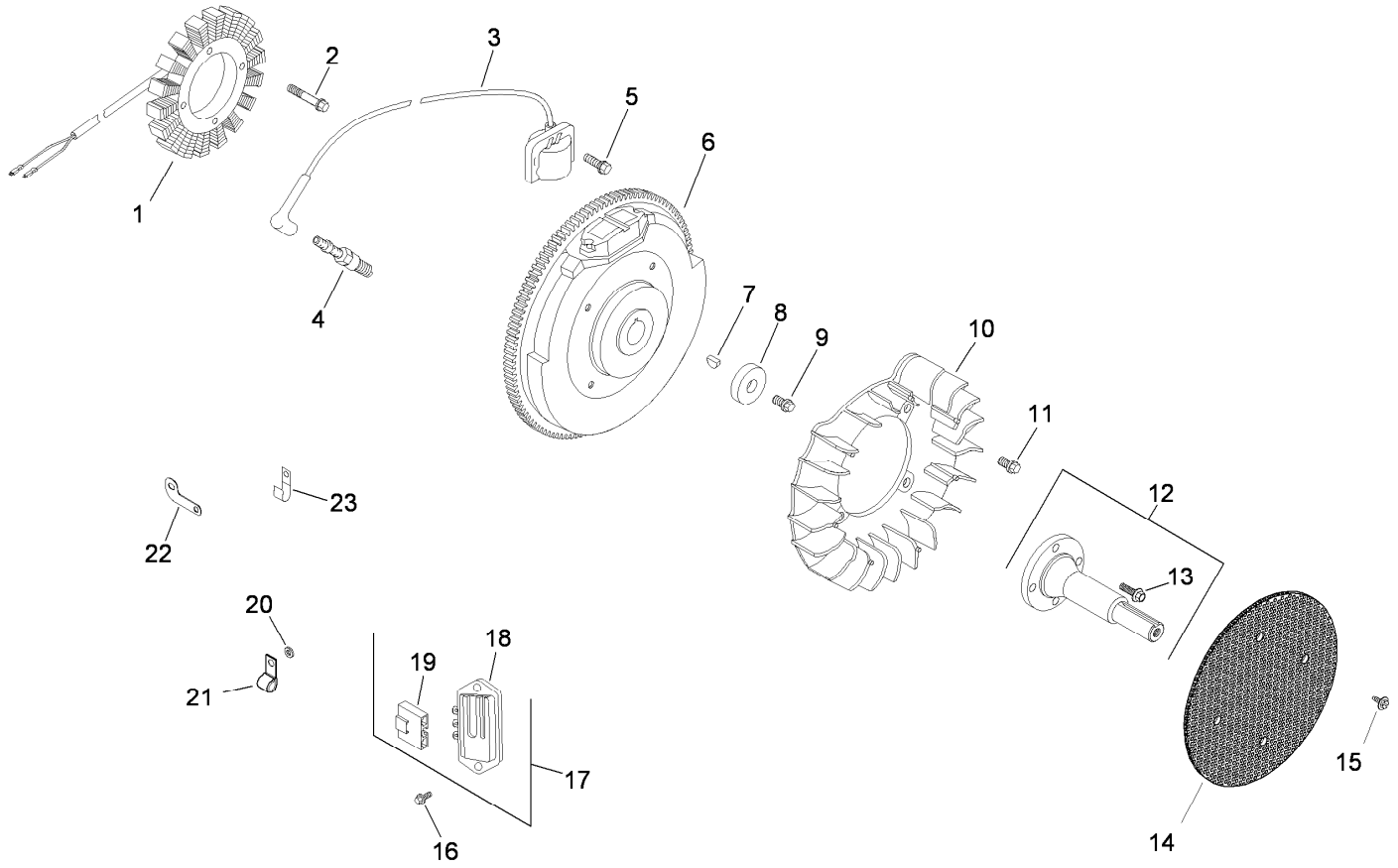


# Ignition and Electrical Assembly
# Kohler CH680-3025A

| Ref. | Part Number | Qty. | Description |
|---|---|---|---|
| 1 | 28 085 02-S | 1 | Stator ASM (25 Amp) ■ |
| 2 | M-545030-S | 2 | Screw-Cap, Hex (M5X0.8X30) ■ |
| 3 | 24 584 45-S | 2 | Module-Ignition (C D I Fixed) ■ |
| 4 | 12 132 02-S | 2 | Spark Plug ■ |
| 5 | M-545020-S | 4 | Screw-Flange, Thread Forming (M5X.8X20) ■ |
| 6 | 24 025 55-S | 1 | Flywheel ASM ■ |
| 7 | X-42-15-S | 1 | Key (3/16 X 5/8) ■ |
| 8 | 12 468 03-S | 1 | Washer-Flat (13/32) ■ |
| 9 | 12 086 14-S | 1 | Screw-Flange (M10X1.5X45) ■ |
| 10 | 24 157 11-S | 1 | Fan ■ |
| 11 | 25 086 47-S | 4 | Bolt-Shoulder (M6X1.0X16) ■ |
| 12 | 24 144 17-S | 1 | Shaft-Drive, Front (Includes Ref 13) ■ |
| 13 | M-839025-S | 4 | Screw-HF (M8X1.25X25) ■ |
| 14 | 24 162 43-S | 1 | Screen-Grass ■ |
| 15 | 25 086 126-S | 4 | Screw-Dog Point, Sems ■ |
| 16 | 25 086 157-S | 2 | Screw-Hex Flange, Hi-Lo ■ |
| 17 | 24 755 144-S | 1 | Full Wave Conversion Kit (Includes Ref 18, 19) ■ |
| 18 | 25 403 05-S | 1 | Rectifier-Regulator (15 Amp) ■ |
| 19 | 25 155 41-S | 1 | Connector (3 Contact) ■ |
| 20 | X-25-63-S | 1 | Washer-Flat (1/4) ■ |
| 21 | 210281-S | 1 | Clip ■ |
| 22 | 24 126 137-S | 1 | Bracket-Strap, Ground ■ |
| 23 | 235173-S | 1 | Clip-Cable ■ |
| | 24 176 92-S | 1 | Harness-Wiring ■ ● |

● Not illustrated

■ Obtain parts from www.kohlerplus.com

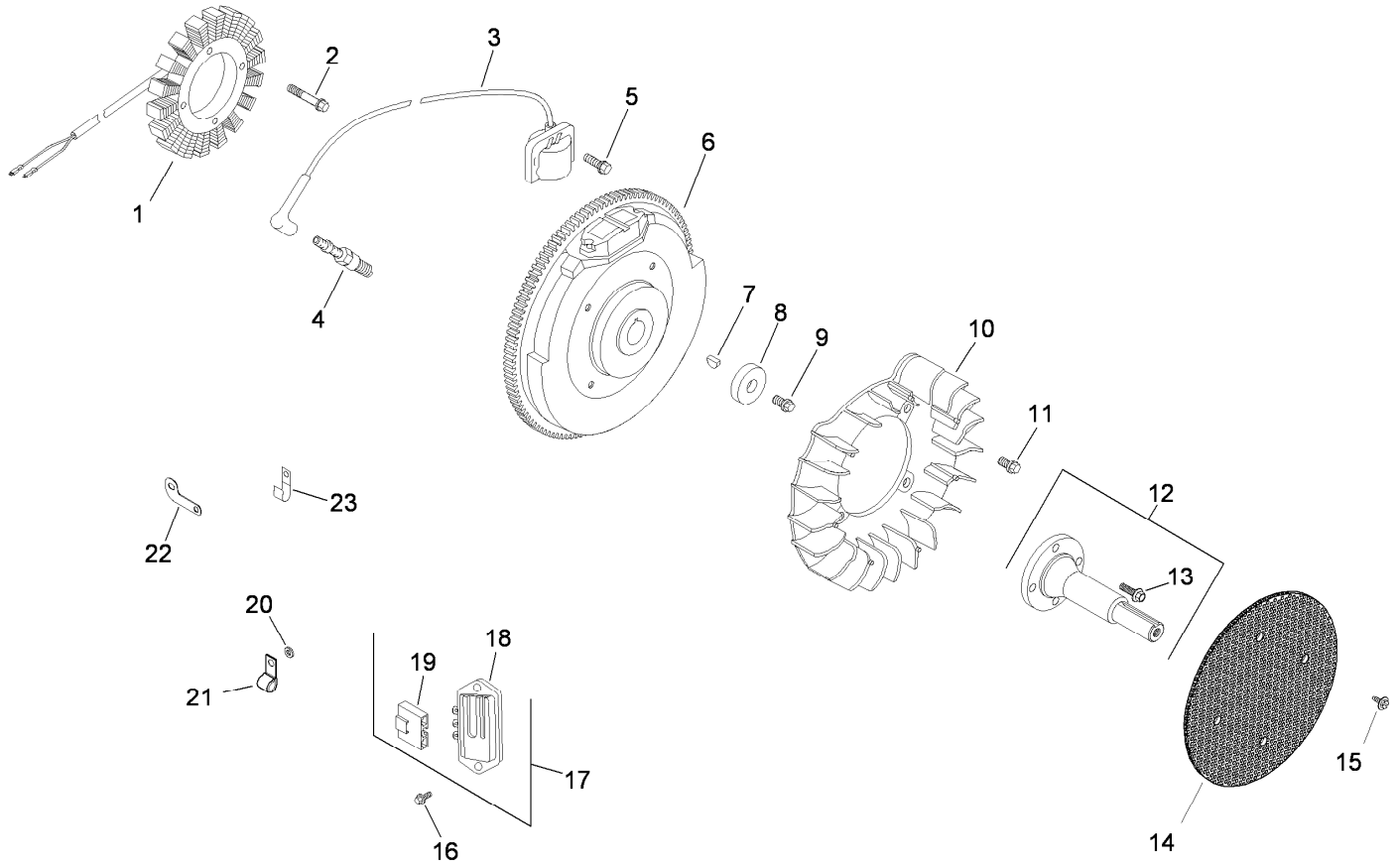


# Ignition and Electrical Assembly Kohler CH680-3025A (continued)

| Ref. | Part Number | Qty. | Description |
|---|---|---|---|
| | 25 454 07-S | 2 | Tie-Wire ■● |
| | 25 518 34-S | 1 | Lead ■● |

● Not illustrated

■ Obtain parts from www.kohlerplus.com

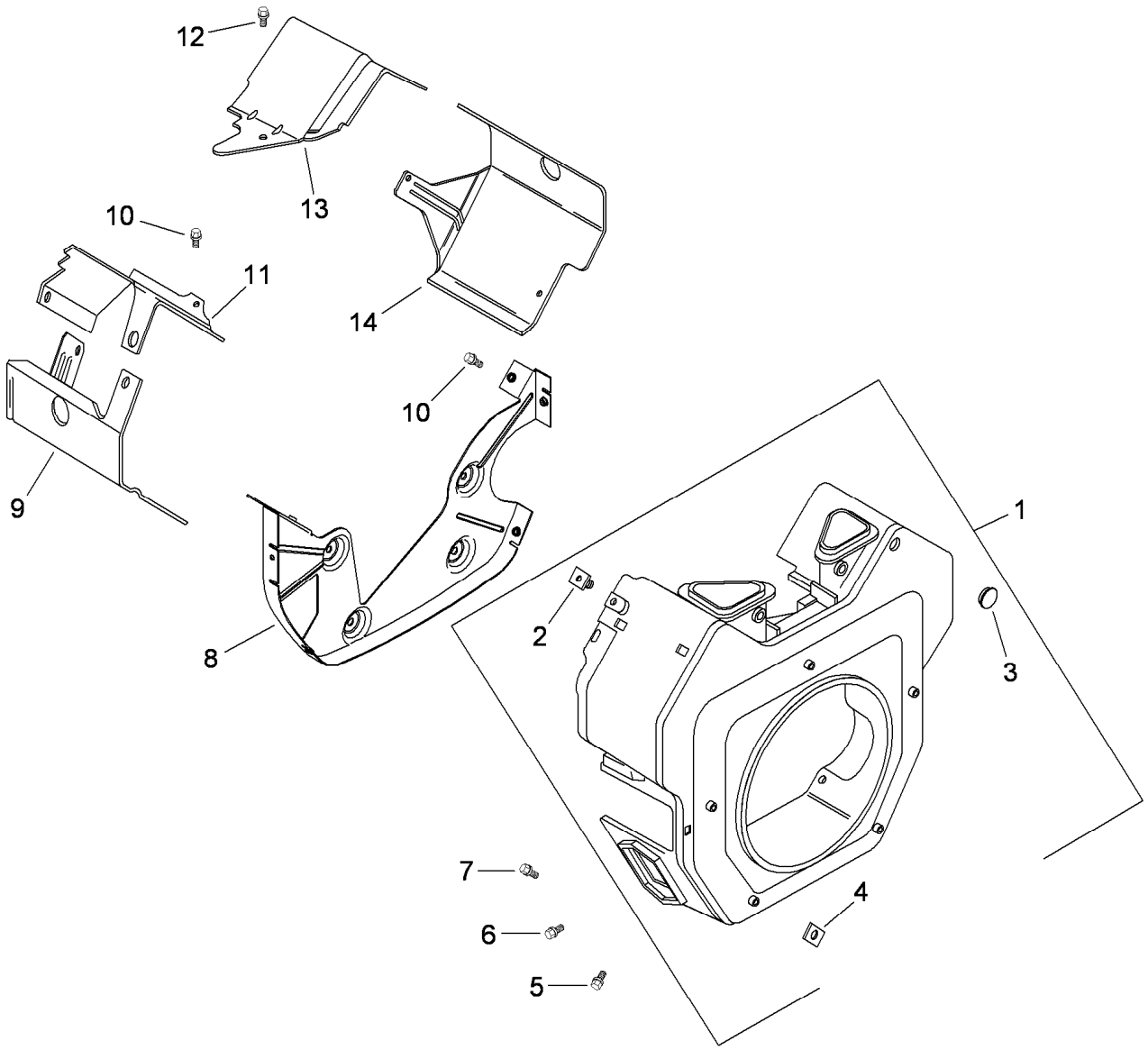


# Blower Housing Assembly
# Kohler CH680-3025A

| Ref. | Part Number | Qty. | Description |
|---|---|---|---|
| 1 | 24 027 175-S | 1 | Blower Housing ASM (Includes Ref 2-4, 41 037 10-S) ■ |
| 2 | 24 100 02-S | 2 | Nut-Plastic ■ |
| 3 | 25 139 16-S | 1 | Plug-Button (9/16) ■ |
| 4 | 24 100 01-S | 3 | Nut-Plastic ■ |
| 5 | M-561016-S | 1 | Screw-Flange, Thread Forming (M5X.80X16) ■ |
| 6 | M-545016-S | 3 | Screw-Flange, Thread Forming (M5X0.8X16) ■ |
| 7 | M-545020-S | 2 | Screw-Flange, Thread Forming (M5X.8X20) ■ |
| 8 | 24 146 55-S | 1 | Plate-Backing ■ |
| 9 | 24 063 88-S | 1 | Baffle-Barrel, Cylinder (No. 2 Side) ■ |
| 10 | M-645016-S | 6 | Screw-Flange, Thread Forming (M6X1.0X16) ■ |
| 11 | 24 063 70-S | 1 | Baffle-Valley (No. 2 Side) ■ |
| 12 | M-545010-S | 2 | Screw-HHFTF (M5X.80X10) ■ |
| 13 | 24 063 59-S | 1 | Baffle-Valley (No. 1 Side) ■ |
| 14 | 24 063 85-S | 1 | Barrel-Cylinder (No.1 Side) ■ |
| | 25 154 11-S | 1 | Clip-Repair (Speed Nut) ■ ● |
| | 41 037 10-S | 1 | Nameplate-Service ■ ● |

● Not illustrated

■ Obtain parts from www.kohlerplus.com

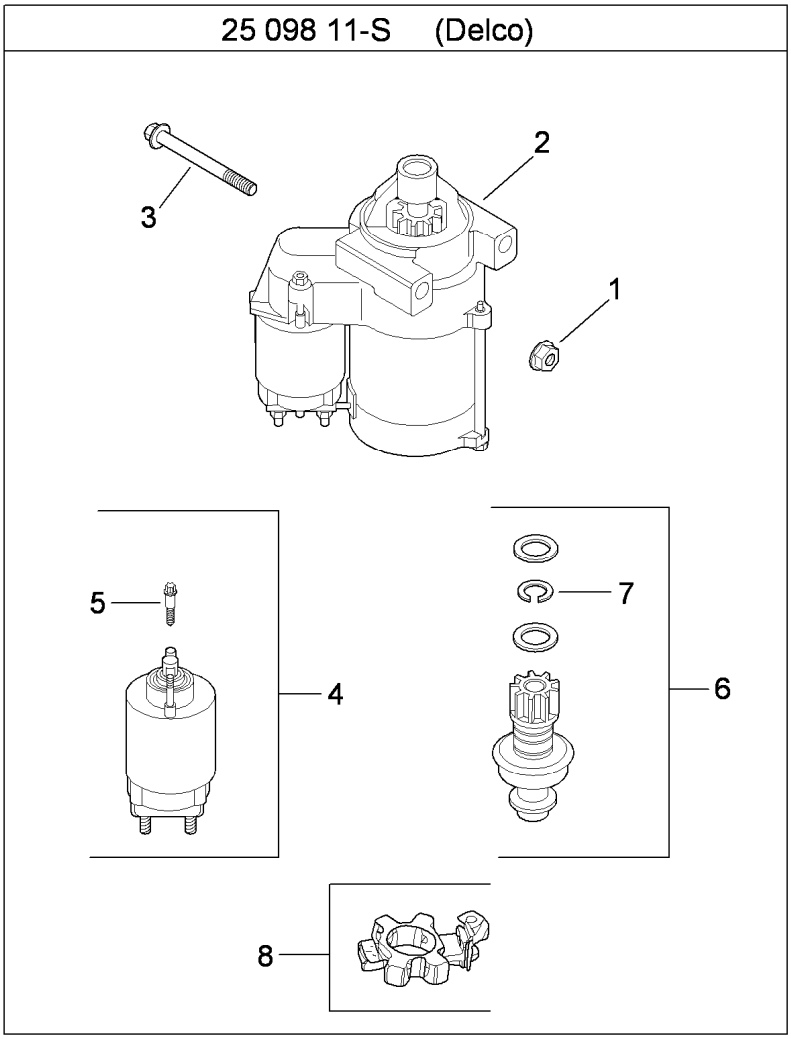


# Starter Assembly
# Kohler CH680-3025A

| Ref. | Part Number | Qty. | Description |
|---|---|---|---|
| 1 | M-841080-S | 1 | Nut-Flange (M8X1.25) ● |
| 2 | 25 098 11-S | 1 | Starter ASM (Solenoid Shift) ● |
| 3 | M-851080-S | 2 | Screw-Flange (M8X1.25X80) ● |
| 4 | 25 435 06-S | 1 | Solenoid Kit (Includes Ref 5) ● |
| 5 | 25 086 113-S | 3 | Screw-Torx Head, External ● |
| 6 | 25 755 33-S | 1 | Starter Pinion Drive Kit (Includes Ref 7) ● |
| 7 | 25 141 05-S | 1 | Ring-Retaining ● |
| 8 | 25221 01-S | 1 | Brush Holder Kit ● |

● Obtain parts from www.kohlerplus.com

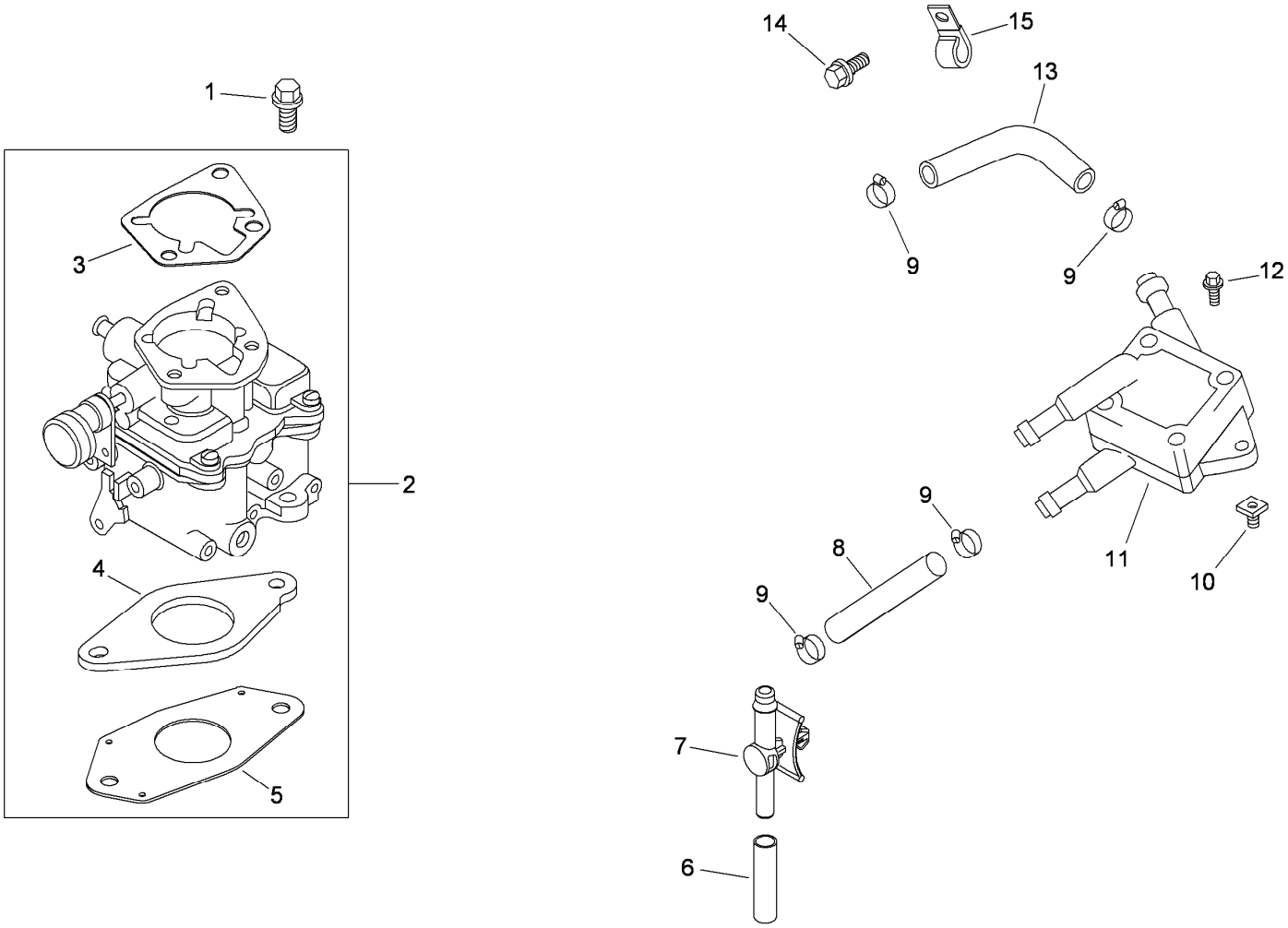


# Fuel System Assembly
# Kohler CH680-3025A

| Ref. | Part Number | Qty. | Description |
|---|---|---|---|
| 1 | 25 086 124-S | 2 | Screw-Flange (M6X1.0X25) ■ |
| 2 | 24 853 159-S | 1 | Carburetor Kit (Tier 111) (Includes Ref 3-5) ■ |
| 3 | 24 041 06-S | 1 | Gasket-Base, Air Cleaner ■ |
| 4 | 24 041 17-S | 1 | Gasket-Carburetor ■ |
| 5 | 24 041 53-S | 1 | Gasket-Carburetor ■ |
| 6 | 25 173 23-S | 1 | Cap-Masking ■ |
| 7 | 25 155 40-S | 1 | Connector (S A I) ■ |
| 8 | 25 111 34-S | 1 | Line-Fuel (24.0 Cut To Length) ■ |

| Ref. | Part Number | Qty. | Description |
|---|---|---|---|
| 9 | 25237 14-S | 2 | Clamp-Hose (1/2) ■ |
| 10 | 25 100 37-S | 2 | Nut-Plastic (Black) ■ |
| 11 | 24 393 16-S | 1 | Pump-Fuel ■ |
| 12 | 24 086 12-S | 2 | Screw-TAP (M6X1.7X18) ■ |
| 13 | 24 353 02-S | 1 | Line-Fuel, Flexible (15.5) ■ |
| 14 | 25 086 158-S | 1 | Screw-Flanged, Thread Forming (M6X1.0X11) ■ |
| 15 | 47 154 01-S | 1 | Clip-Cable ■ |
| | 20 431 02-S | 1 | Sleeve-Anti Abrasion ■ ● |
| | 24 518 24-S | 1 | Lead-Ground ■ ● |

● Not illustrated

■ Obtain parts from www.kohlerplus.com

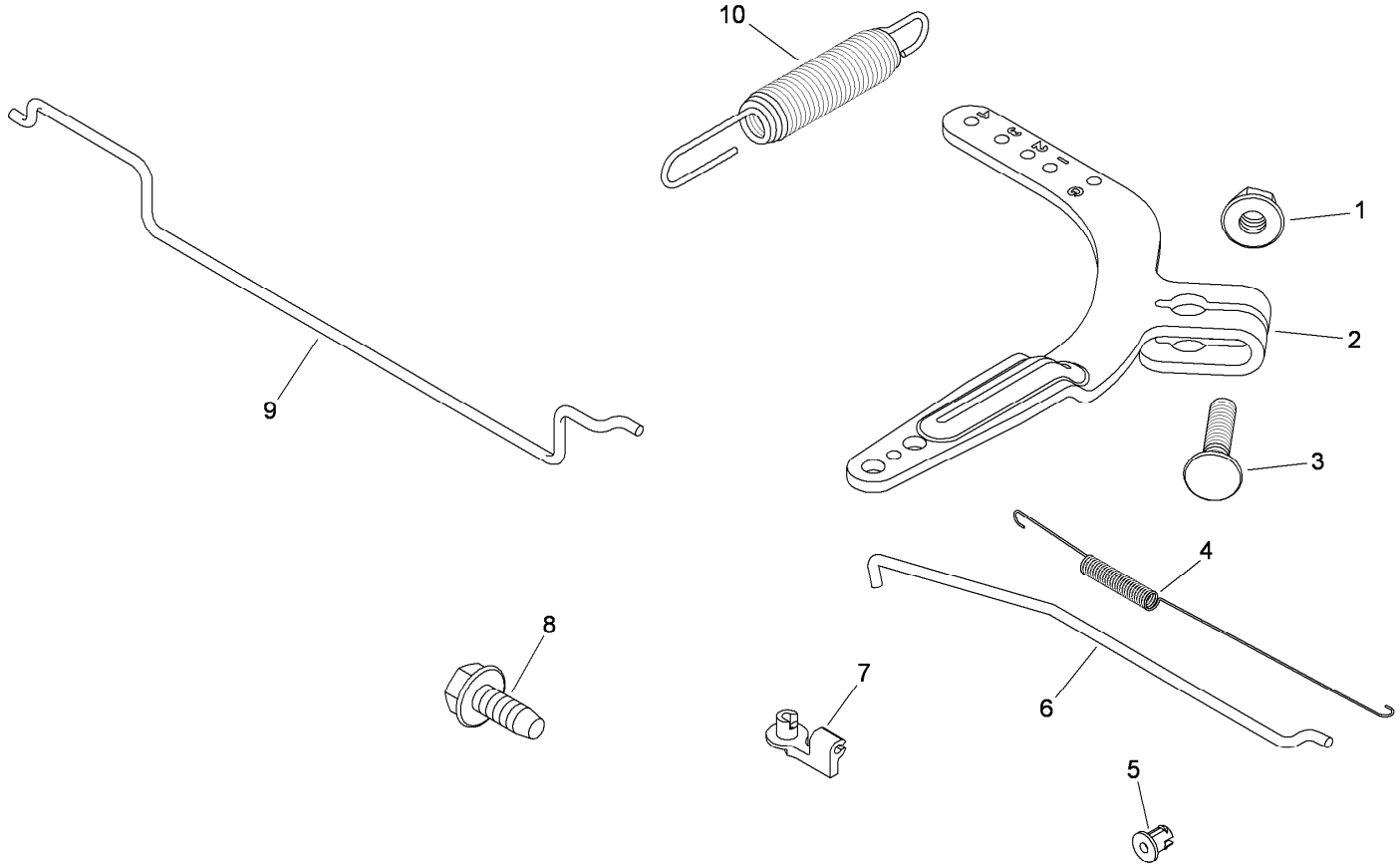


# Engine Control Assembly
# Kohler CH680-3025A

| Ref. | Part Number | Qty. | Description |
|---|---|---|---|
| 1 | M-641060-S | 1 | Nut-Flange (M6X1.0) ■ |
| 2 | 24 090 51-S | 1 | Lever-Governor ■ |
| 3 | 24 211 03-S | 1 | Bolt-Sq Neck, Rd HD (M6X1.0X25) ■ |
| 4 | 24 089 01-S | 1 | Spring-Linkage ■ |
| 5 | 25 158 08-S | 1 | Bushing-Linkage, Throttle ■ |
| 6 | 24 079 01-S | 1 | Linkage-Throttle ■ |
| 7 | 25 158 11-S | 1 | Bushing-Retaining, Linkage ■ |
| 8 | M-645016-S | 4 | Screw-Flange, Thread Forming (M6X1.0X16) ■ |
| 9 | 24 079 21-S | 1 | Linkage-Choke ■ |
| 10 | 24 089 15-S | 1 | Spring-Governor ■ |
| | 25 454 05-S | 1 | Tie ● ■ |

● Not illustrated

■ Obtain parts from www.kohlerplus.com

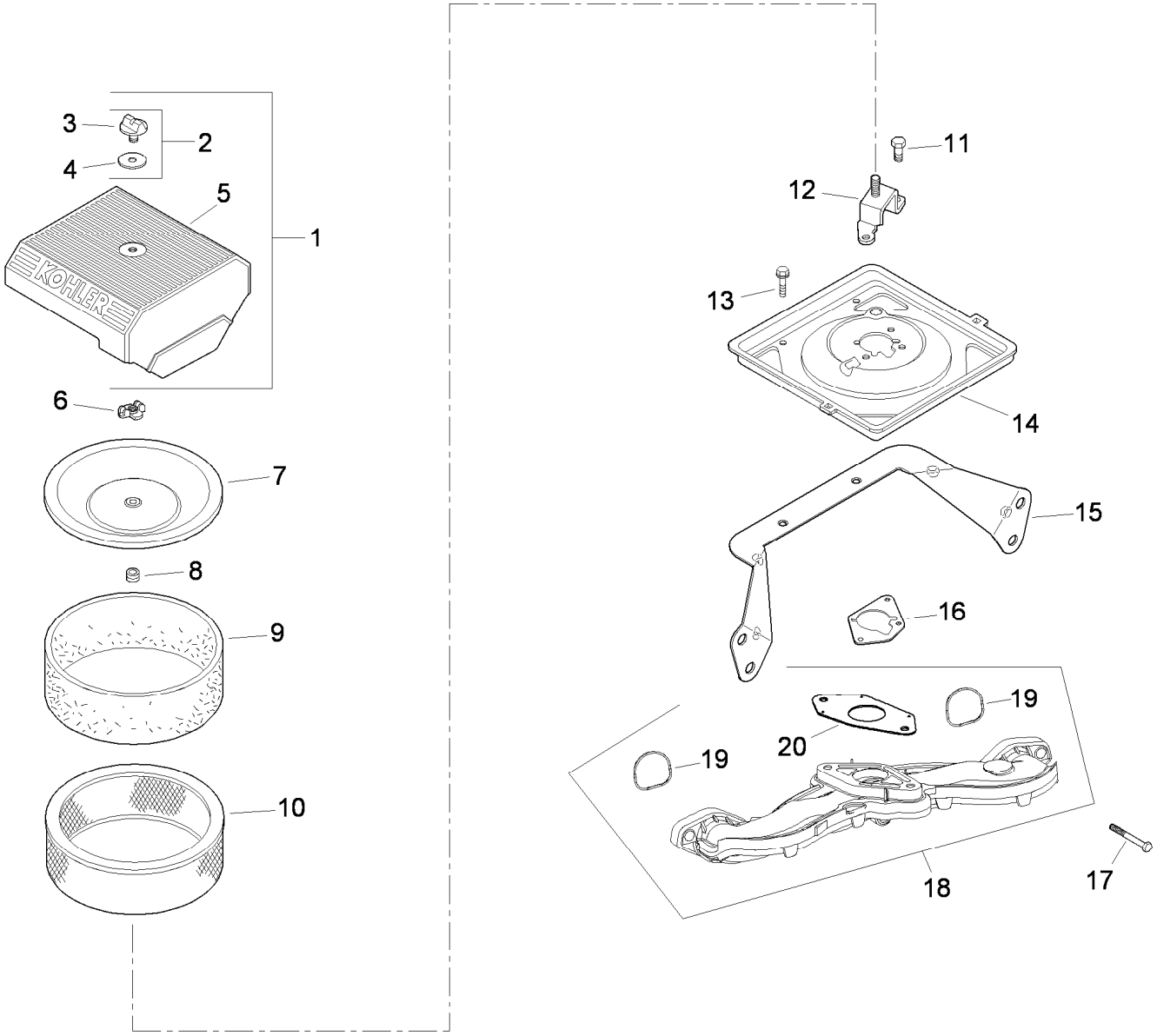


# Air Intake and Filtration Assembly
# Kohler CH680-3025A

| Ref. | Part Number | Qty. | Description |
|---|---|---|---|
| 1 | 24 743 05-S | 1 | Air Cleaner Cover Kit (Includes Ref 2-5) ● |
| 2 | 54 755 01-S | 1 | Knob W/Seal Kit (Includes Ref 3, 4) ● |
| 3 | 25 341 04-S | 1 | Knob-Cover ● |
| 4 | 24 153 20-S | 1 | O-Ring ● |
| 5 | 24 096 67-S | 1 | Cover-Cleaner, Air ● |
| 6 | 12 100 01-S | 1 | Nut-Wing ● |
| 7 | 24 096 01-S | 1 | Cover-Air Cleaner, Inner ● |
| 8 | 230046-S | 1 | Seal ● |
| 9 | 24 083 05-S | 1 | Pre-Cleaner ● |
| 10 | 24 083 03-S | 1 | Element-Filter, Air ● |
| 11 | 24 086 53-S | 3 | Screw-Flange, Thread Forming (M6X1.0X16) ● |

| Ref. | Part Number | Qty. | Description |
|---|---|---|---|
| 12 | 24 126 88-S | 1 | Bracket-Cleaner, Air ● |
| 13 | M-545010-S | 2 | Screw-HHFTF (M5X.80X10) ● |
| 14 | 24 094 37-S | 1 | Base-Cleaner, Air ● |
| 15 | 24 126 130-S | 1 | Bracket-Base, Air Cleaner ● |
| 16 | 24 041 06-S | 1 | Gasket-Base, Air Cleaner ● |
| 17 | M-651040-S | 4 | Screw-Flange (M6X1.0X40) ● |
| 18 | 24 164 93-S | 1 | Manifold-Intake (Plastic) (Includes Ref 19, 20) ● |
| 19 | 24 153 27-S | 2 | O-Ring (Intake Port) ● |
| 20 | 24 041 53-S | 1 | Gasket-Carburetor ● |

● Obtain parts from www.kohlerplus.com

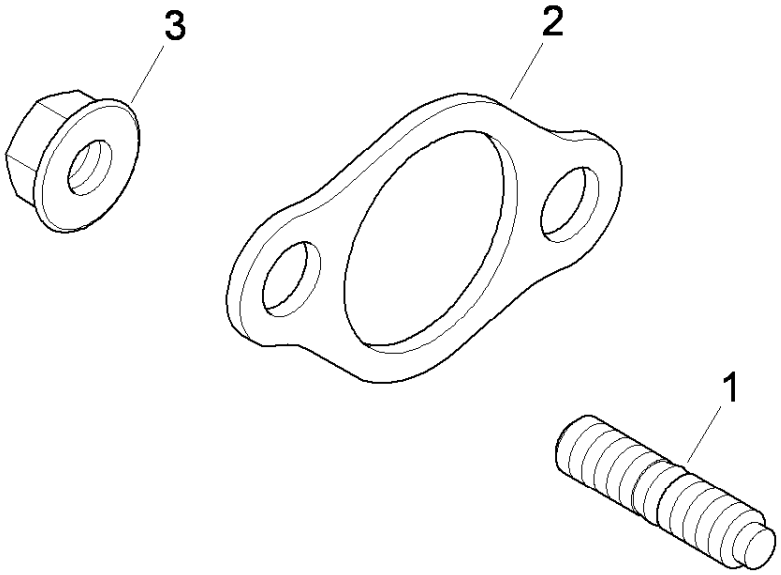


# Exhaust Assembly
# Kohler CH680-3025A

| Ref. | Part Number | Qty. | Description |
|---|---|---|---|
| 1 | 25 072 14-S | 4 | Stud (M8X1.25X33) ● |
| 2 | 24 041 49-S | 3 | Gasket-Exhaust ● |
| 3 | M-841080-S | 4 | Nut-Flange (M8X1.25) ● |

● Obtain parts from www.kohlerplus.com

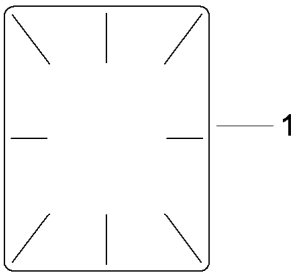

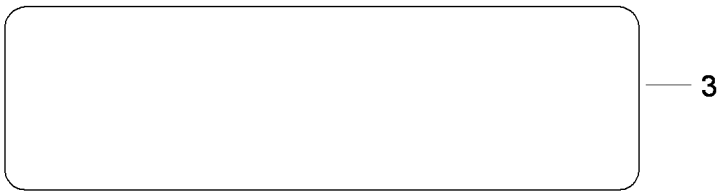


Artwork is representative
Actual labels may differ depending on model and specification number

# Decals
# Kohler CH680-3025A

| *Ref.* | *Part Number* | *Qty.* | *Description* |
|---|---|---|---|
| 1 | 25 113 39-S | 1 | Decal-Laminate, Clear ● |
| 2 | 25 113 05-S | 1 | Decal-Sentry, Oil ● |
| 3 | 24 113 81-S | 1 | Decal-23 HP ● |

● Obtain parts from www.kohlerplus.com

# Attachments and Accessories

## For 07369 Workman HD Utility Vehicle with Bed

| Product Name | Model/Part |
|---|---|
| Full Area Flatbed | 07301 |
| Full Area Flatbed Side Kit | 07302 |
| Fold Down Side Kit | 07303 |
| Left-Hand Light Kit | 07315 |
| High-Flow Hydraulic Kit | 07316 |
| Right-Hand Light Kit | 07317 |
| 2/3 Area Flatbed | 07321 |
| 2/3 Area Flatbed Side Kit | 07322 |
| Bed Liner | 07331 |
| Cab | 07339 |
| 1/3 Area Flatbed | 07341 |
| 1/3 Area Stake Side Kit | 07342 |
| 1/3 Area Platform Lift | 07344 |
| Canopy | 07372 |
| Windshield | 07373 |
| Heater Cab | 07374 |
| Cab Door Kit | 07375 |
| Solid Window Cab Door Kit | 07376 |
| Hitch Frame Kit | 07377 |
| 4 Post Roll-Over Protection System | 07378 |
| Rear PTO Kit | 07419 |
| Hand Throttle Kit | 07420 |
| Spiker | 08856 |
| Finish Grader | 08867 |
| Backup Alarm Kit | 107-8037 |
| Premium Engine Oil, 10w30 (55 Gallon Drum) | 108-1179 |
| Premium Engine Oil, 10w30 (5 Gallon Pail) | 108-1180 |
| Premium ATF (Drum) | 108-1185 |
| Premium ATF (Pail) | 108-1186 |
| Premium All Purpose Grease (Tube) | 108-1190 |
| Remote Hydraulics Manifold Kit | 110-2626 |
| Tire-Rear, 24x13-12 | 110-5132 |
| Spark Arrestor Kit | 112-1688 |
| Wheel-12in x 8.0in | 114-8260 |
| Horn Kit | 115-7825 |
| High Air Intake Kit | 115-7848 |
| Side Mirror Kit | 115-7849 |
| Roll-Over Protection System Signal Kit | 117-4825 |
| Worklight Kit | 117-4827 |
| Remote Hydraulic Float Kit | 117-4828 |
| Cab Mirror Kit | 117-4830 |
| Receiver Hitch Kit | 117-4831 |
| Trailer Signal Kit | 117-4836 |
| Trailer Brake Kit | 117-4837 |
| 24x13-12 Tire and Wheel ASM | 117-4838 |
| Sprayer Cylinder Lift Kit, Workman 200 Spray System | 117-4846 |

# Attachments and Accessories (continued)

Engine Cover Kit ..... 117-4867
Harness-Wire, Speedometer Adapter ..... 119-1762
Canopy for Four-Post Roll-Over Protection System Kit ..... 119-9457
Single Nozzle Kit ..... 41024
Hose Reel Kit ..... 41097
Spray Gun Kit 9 (inc. 25ft Of 1/2in Hose) ..... 41133
Pro Foam Concentrate (4 x 1 Gallon) ..... 41157
Sonic Boom Kit ..... 41217
Workman 200 Spray System ..... 41235
Foam Marker Kit ..... 41236
Spreader Base Unit ..... 41253
Vicon Spreader ..... 41256
Power Holster Hitch Kit ..... 44209
Topdresser 1800 ..... 44225
Fifth Wheel Hitch Kit ..... 44230
Cushman GA 60 Aerator Adapter Kit ..... 44232
Core Harvester Adapter Kit ..... 44242
Automatic Tailgate Release Kit ..... 92-1220
Fuse Block ..... 92-2641
PTO Over Running Clutch Kit ..... 92-2655
Topdresser 1800 Lift Kit ..... 92-4452
Mid-Mount Kit for Platform Lift ..... 93-3741
1/3 Area Cover Kit ..... 93-9225
Rear 1/3 Area Mounting Kit ..... 93-9249
Tire-Rear, 23x8.50-12 ..... 98-2993
Tire-Rear, Industrial ..... 99-1091

**Notes:**

**Notes:**

**Notes:**

TORO®

Count on it.