Form No. 3376-333 Rev B

TORO®

Count on it.

Parts Catalog

Workman® HD Utility Vehicle with Bed

Model No. 07369—Serial No. 313000001 and Up

Register at www.Toro.com.
Original Instructions (EN)

3376-333 B

Ordering Replacement Parts

To order replacement parts, please supply the part number, the quantity, and the description of each part desired.

Understanding Reference Numbers

Each identified part in an illustration has a reference number. The reference number for a part also appears in the parts list, along with other information about the part.

This catalog uses two special reference number formats, one to indicate parts in a service assembly and another to indicate the quantity of a given part in an illustration.

Service Assembly Reference Numbers

Parts in service assemblies have reference numbers in the form a:b. The a represents the reference number of the entire service assembly and the b represents a sequential number unique to each part within the service assembly.

For example, a wheel assembly might be identified by reference number 6, the tire by 6:1, the valve by 6:2, and the wheel by 6:3. When you order the assembly identified by reference number 6, you receive all parts identified by reference numbers 6:1,6:2, and 6:3. However, you may also order any part individually. Reference numbers of this type appear in illustration and in parts lists.

Reference Numbers Indicating Quantity

In an illustration, if a reference number indicates more than one part, the reference number has the form nX y. The n represents the quantity of the part, the X is the multiplication symbol, and the y represents the reference number.

For example, in an illustration, the reference number 2X 37 means that two of the parts identified by reference number 37 are indicated.

Contents

Front Frame Assembly . . . 4
Fuel System Assembly . . . 5
Rear Frame and Suspension Assembly . . . 6
Hydraulic Lift Cylinder Assembly . . . 7
Hydraulic Cylinder Assembly No. 106-7939 . . . 9
Lift Valve Assembly . . . 10
Control Valve Assembly No. 43-1950 . . . 11
Rear Axle Assembly . . . 12
Brake Caliper Assembly No. 119-9535 . . . 13
Driveshaft Assembly No. 114-8367 . . . 14
Front and Rear Brake Line Assembly . . . 15
Front Suspension Assembly . . . 16
Steering and Front Wheel Assembly . . . 17
Steering Linkage Assembly . . . 18
Hydraulic Cylinder Assembly No. 112-3217 . . . 19
Front Control Arm Assembly . . . 20
Brake and Clutch Pedal Assembly . . . 21
Master Cylinder Assembly No. 104-6782 . . . 22
Accelerator Pedal Assembly . . . 23
Console Assembly . . . 24
Shift Assembly No. 106-7887 . . . 26
Bumper, Hood and Seat Base Assembly . . . 27
Dash Assembly . . . 28
Steering Hydraulic Assembly . . . 29
Steering Valve Assembly No. 120-4813 . . . 30
Seat Assembly . . . 31
Roll-Over Protection System Assembly . . . 32
Full Bed and Side Panel Assembly . . . 33
Engine Sub Frame Assembly . . . 34
Hydraulic Gear Pump Assembly No. 112-2983 . . . 35
Engine Assembly . . . 36
Muffler Assembly . . . 38
Clutch Linkage Assembly . . . 39
Transaxle Assembly . . . 40
Case Assembly Transaxle Assembly No. 115-7783 . . . 41
Center Plate Assembly Transaxle Assembly No. 115-7783 . . . 42
Main Shaft Assembly Transaxle Assembly No. 115-7783 . . . 43
Reduction Shaft Assembly Transaxle Assembly No. 115-7783 . . . 44
Reverse Shaft Assembly Transaxle Assembly No. 115-7783 . . . 45
Main Shift Assembly Transaxle Assembly No. 115-7783 . . . 46
Hi-Lo Shift Assembly Transaxle Assembly No. 115-7783 . . . 47
Countershaft Assembly Transaxle Assembly No. 115-7783 . . . 48
Differential Gear Assembly Transaxle Assembly No. 115-7783 . . . 49
Differential Carrier Assembly Transaxle Assembly No. 115-7783 . . . 50
Differential Lock Assembly Transaxle Assembly No. 115-7783 . . . 51
Axle Shaft Assembly Transaxle Assembly No. 115-7783 . . . 52
Battery Assembly . . . 53
Tail Light and Fender Assembly . . . 54
Front and Rear Wire Harness Assembly . . . 55
Attachments and Accessories . . . 56

© 2017—The Toro® Company

8111 Lyndale Avenue South
Bloomington, MN 55420

Contact us at www.Toro.com.
Printed in the USA.

All Rights Reserved

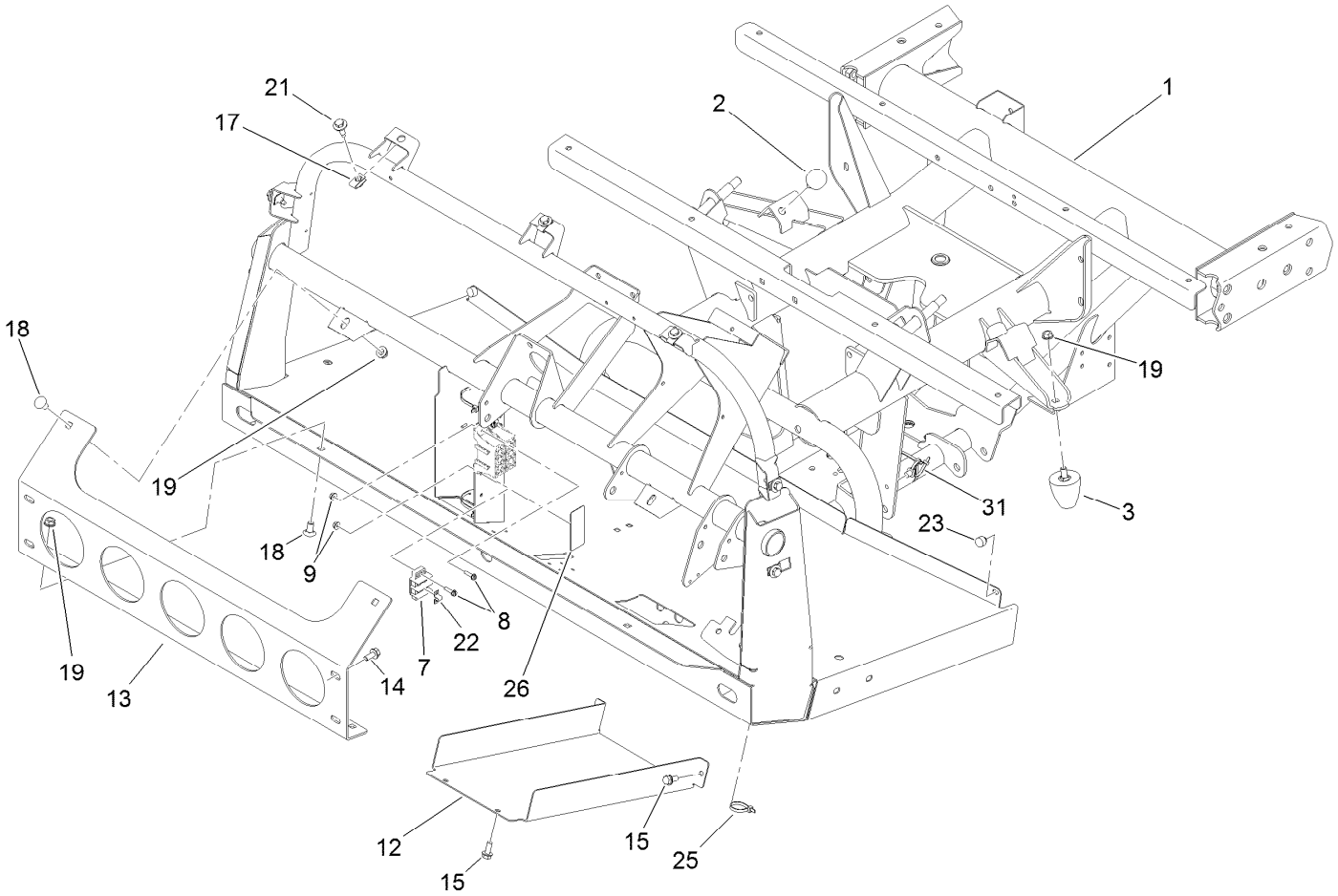

Front Frame Assembly

Ref.	Part Number	Qty.	Description
1	120-5083-03	1	Frame-Front
2	87-2440	2	Bumper-Rubber
3	26-0071	2	Snubber-Rubber
7	42862	1	Block-Terminal, Ground
8	32105-13	6	Screw-HWH
9	3290-148	6	Nut-HF
12	106-2427-03	1	Cover
13	114-8272-03	1	Bracket-Bumper
14	3234-5	4	Screw-HHF
15	32144-11	4	Screw-HWHTF

Ref.	Part Number	Qty.	Description
17	94-2413	7	Nut-U
18	3231-21	4	Screw-CARR
19	3290-357	6	Nut-HHF, Whiz
21	114-8418	7	Screw-HWH, Sems
22	42863	1	Strip-Jumper
23	107-8042	2	Bumper-Rubber
25	3290-379	9	Tie-Cable
26	115-7813	1	Decal-Fuse
31	32180-030	2	Clip-Tie

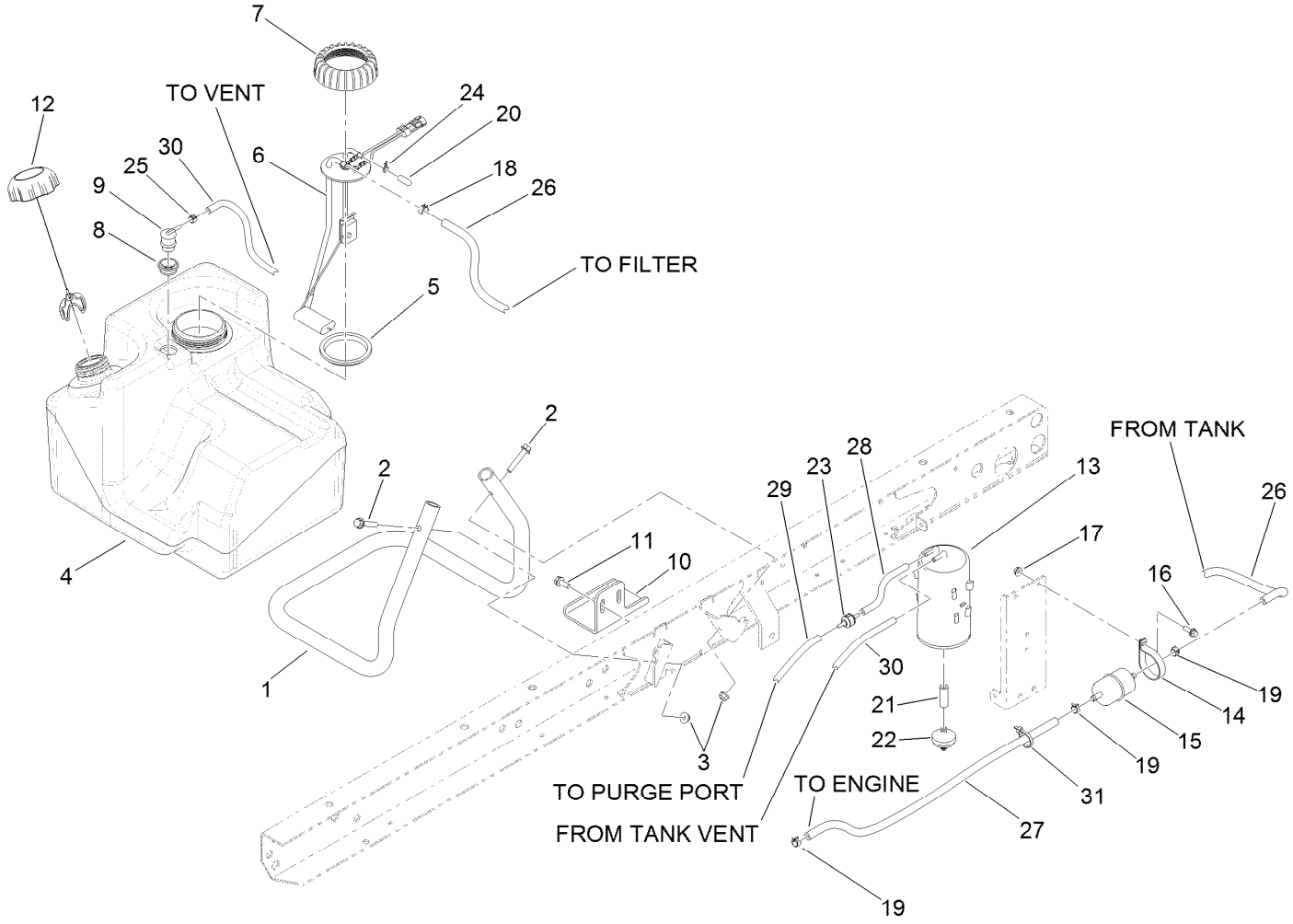

Fuel System Assembly

Ref.	Part Number	Qty.	Description
1	115-7767-03	1	Tube-Support
2	94-5780	2	Screw-HWH
3	104-8300	4	Nut-HF, NI
4	115-7700	1	Tank-Fuel
5	115-2163	1	Gasket-Pump, Fuel
6	114-8348	1	Sender-Fuel
7	115-2162	1	Cap-Pump, Fuel
8	114-0284	1	Grommet
9	114-0285	1	Valve-Rollover
10	114-8404	1	Plate-Retainer
11	32144-11	2	Screw-HWHTF
12	115-7788	1	Cap-Fuel
13	115-2251	1	Canister-Carbon
14	2412-148	1	Clamp-R
15	108-3854	1	Filter-Fuel
16	3234-4	1	Screw-HHF

Ref.	Part Number	Qty.	Description
17	32128-33	1	Nut-HF
18	92-2379	1	Clamp-Hose
19	2412-98	3	Clamp-Hose
20	115-2403	1	Cap
21	106-5317	1	Hose-Fuel
22	115-7854	1	Filter-Fuel, Inline
23	115-7868	1	Valve-Check, Vacuum
24	2412-79	1	Clamp-Hose
25	2412-146	1	Clamp-Hose
26	110-3372	1	Hose-Fuel
27	109-0281	1	Hose-Fuel
28	115-7871	1	Hose-Fuel
29	115-7872	1	Hose-Fuel
30	110-3254	1	Hose-Fuel
31	3290-379	1	Tie-Cable

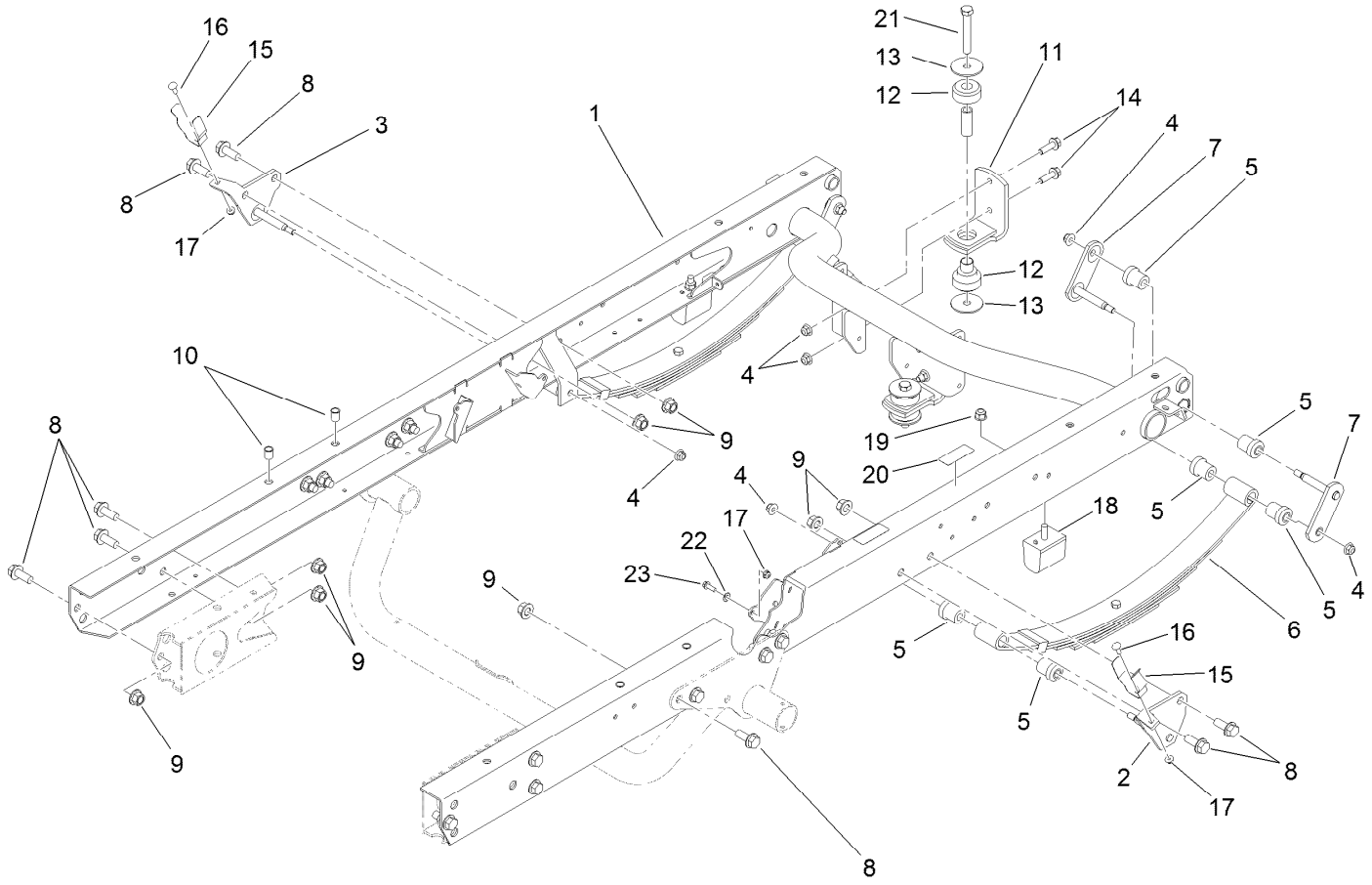

Rear Frame and Suspension Assembly

Ref.	Part Number	Qty.	Description
1	115-2255-03	1	Frame-Rear
2	87-3960	1	Mount-Spring, LH
3	87-3940	1	Mount-Spring, RH
4	104-8301	10	Nut-HF, NI
5	87-4760	12	Bushing-Rubber
6	87-1490	2	Spring-Leaf, Rear
7	87-3980	4	Shackle ASM
8	3234-38	18	Screw-HHF
9	99-5107	18	Nut-Lock
10	32148-9	4	Insert-Nut
11	87-5800-03	2	Mount-Transaxle
12	106-7865	2	Mount-Engine

Ref.	Part Number	Qty.	Description
13	87-5100	4	Washer-Snubbing
14	3234-24	4	Screw-HHF
15	108-3109	2	Retainer-Cylinder
16	3229-1	2	Bolt-CARR
17	104-7201	3	Nut-HF
18	87-3470	2	Bumper
19	103-9511	2	Nut-Lock, NI
20	115-2047	2	Decal-Surface, Hot
21	33116-080	2	Screw-HH
22	3255-8	1	Washer-Lock
23	32105-15	1	Screw-HWH

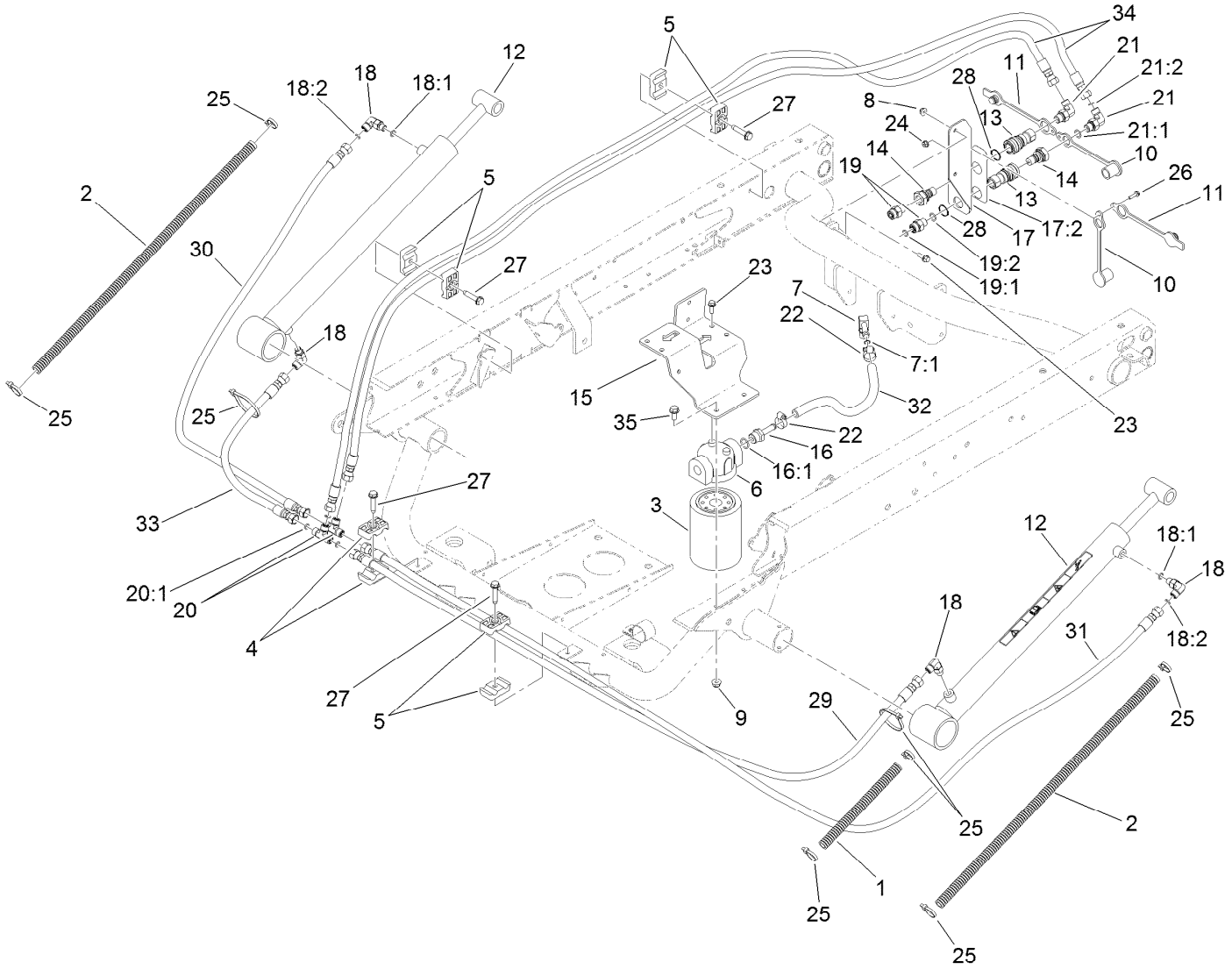

Hydraulic Lift Cylinder Assembly

Ref.	Part Number	Qty.	Description
1	24-7922	1	Conduit-Convoluted, Split
2	24-7923	2	Conduit-Convoluted, Split
3	54-0110	1	Filter-Oil, Transmission
4	56-7971	2	Clamp-Tube
5	56-7976	6	Clamp-Tube
6	87-8780	1	Head-Filter
7	100-4887	1	Fitting-Barbed
7:1	237-42	1	O-Ring
8	104-7201	2	Nut-HF
9	104-8300	2	Nut-HF, NI
10	106-7881	2	Cap-Dust, HYD
11	106-7882	2	Plug-Dust, HYD
12	106-7939	2	HYD Cylinder ASM
13	106-7968	2	Coupler-Quick, Female
14	106-7969	2	Coupler-Quick, Male
15	115-2168-03	1	Bracket-Filter
16	115-2231	1	Fitting-Straight
16:1	237-79	1	O-Ring
17	115-7715	1	Coupler Bracket ASM
17:2	115-7723	1	Decal-Disconnect, Quick
18	340-132	4	Fitting-90 DEG

Ref.	Part Number	Qty.	Description
18:1	237-78	1	O-Ring
18:2	237-21	1	O-Ring
19	340-2	2	Fitting-Straight
19:1	237-22	1	O-Ring
19:2	237-42	1	O-Ring
20	340-21	2	Fitting
20:1	237-21	3	O-Ring
21	340-82	2	Fitting-Elbow 90
21:1	237-42	1	O-Ring
21:2	237-21	1	O-Ring
22	2412-36	2	Clamp-Hose
23	3234-4	4	Screw-HHF
24	3290-148	1	Nut-HF
25	3290-379	6	Tie-Cable
26	32105-13	1	Screw-HWH
27	32144-57	4	Screw
28	32151-83	2	Ring-Snap
29	115-7711	1	HYD Hose ASM
30	108-6508	1	Hose-HYD
31	104-3716	1	HYD Hose ASM
32	115-2228	1	HYD Hose ASM

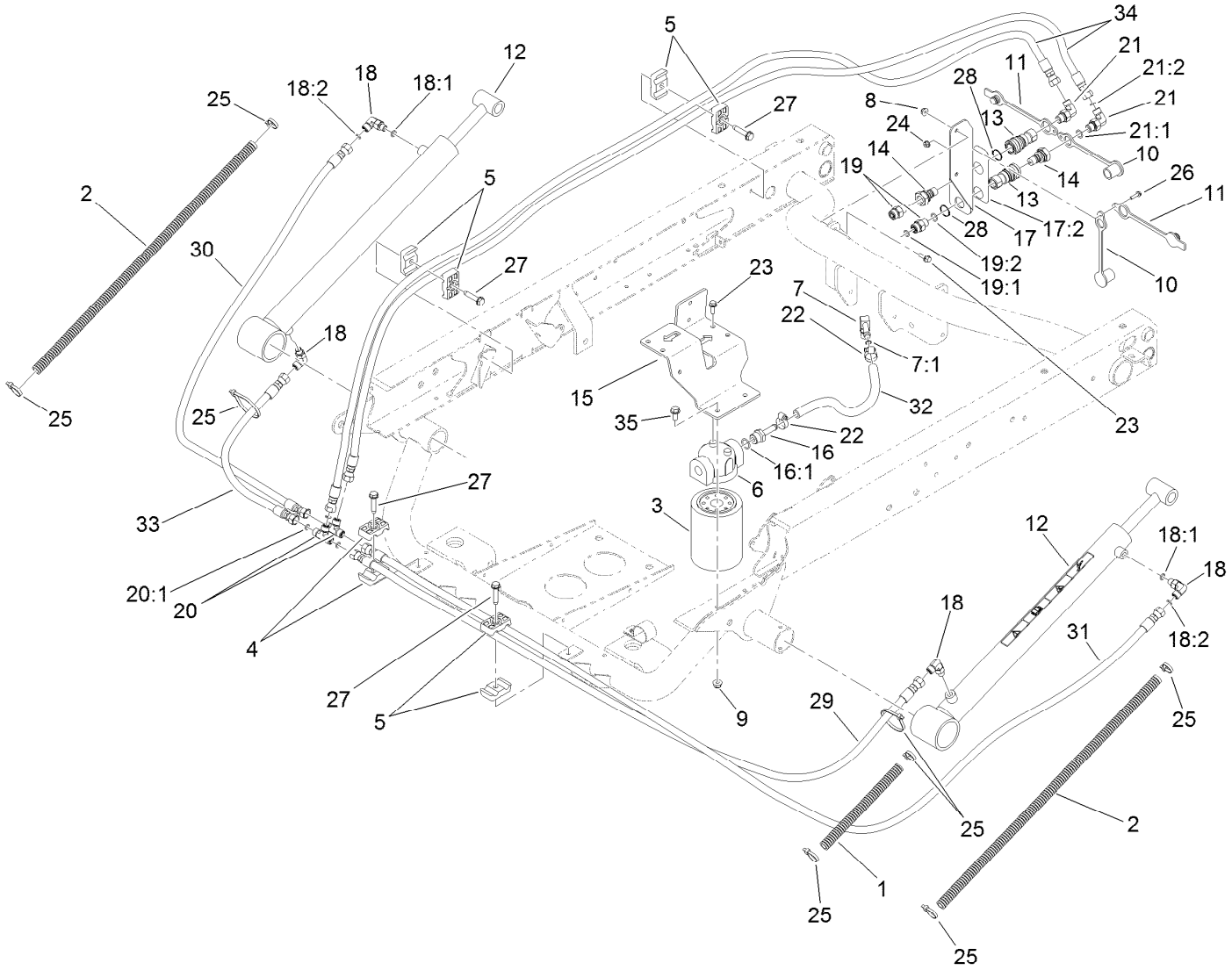

Hydraulic Lift Cylinder Assembly (continued)

Ref.	Part Number	Qty.	Description
33	110-0931	1	Hose-HYD

Ref.	Part Number	Qty.	Description
34	106-3680	2	Hose-HYD
35	3234-5	2	Screw-HHF

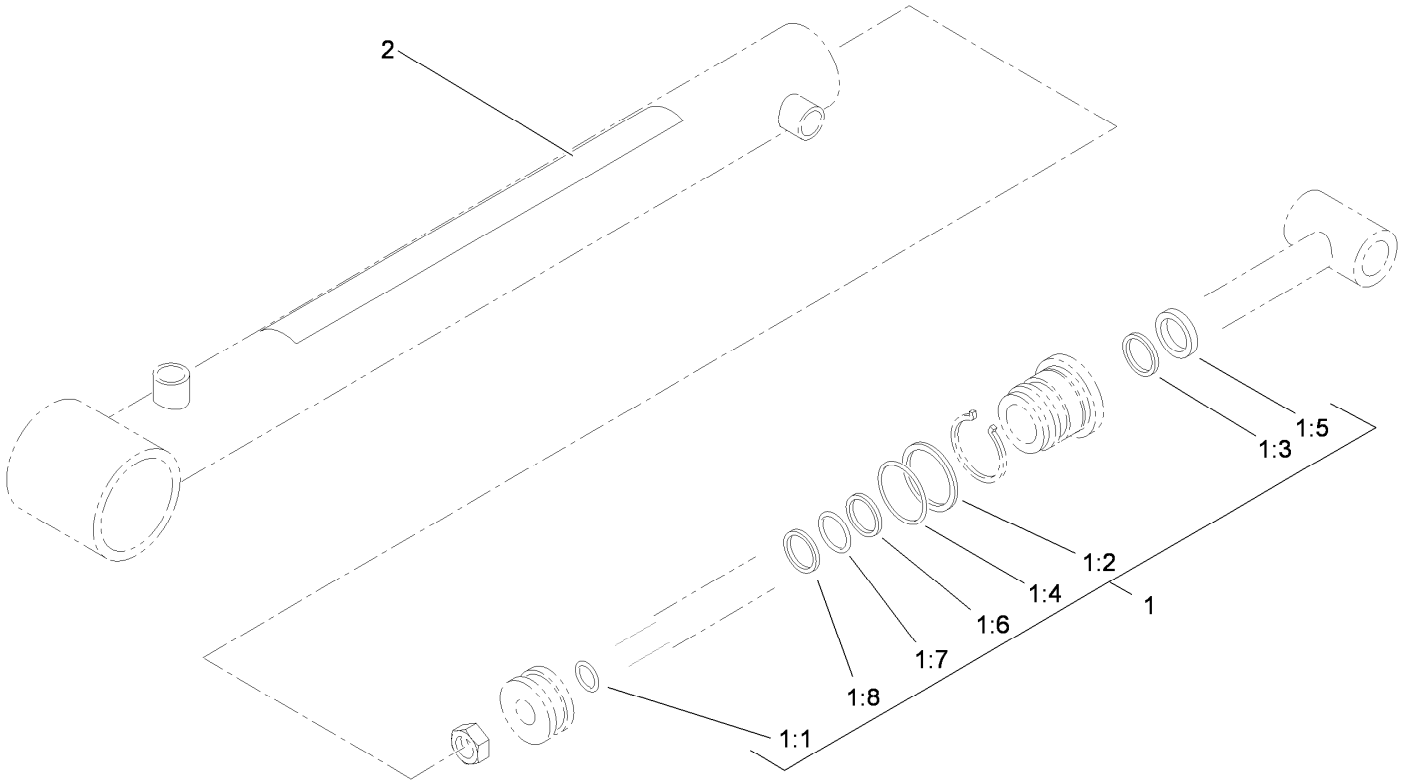

Hydraulic Cylinder Assembly No. 106-7939

Ref.	*Part Number*	*Qty.*	*Description*
1	106-7941	1	Seal Kit
1:1		1	O-Ring ●
1:2		1	O-Ring ●
1:3		1	Seal ●
1:4		1	Back-Up ●
1:5		1	Wiper ●
1:6		1	Seal ●
1:7		1	O-Ring ●
1:8		1	Ring-Wear ●
2	93-9852	1	Decal-Warning

● Not serviced separately

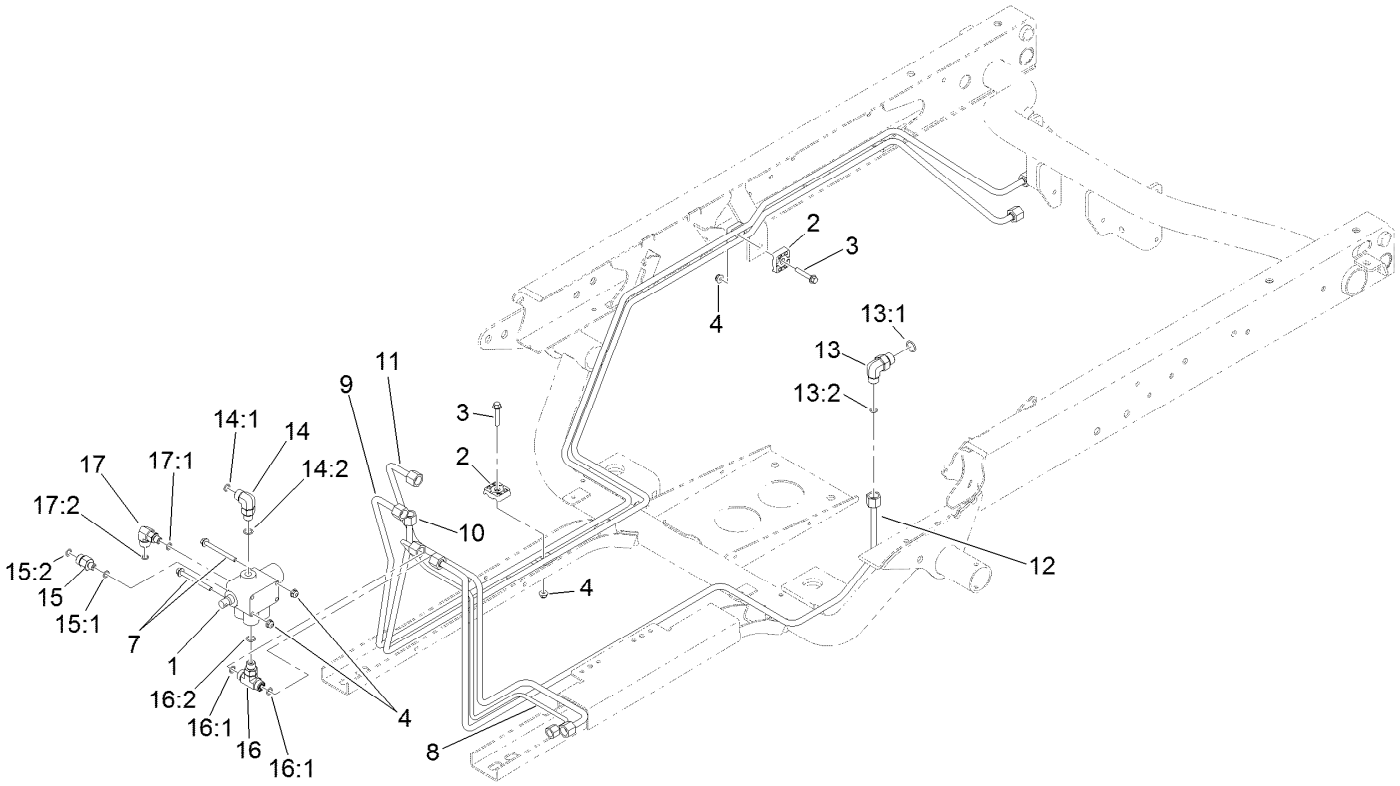

Lift Valve Assembly

Ref.	Part Number	Qty.	Description
1	43-1950	1	HYD Control Valve ASM
2	56-7973	4	Clamp-Tube
3	94-5781	2	Screw-HHF
4	104-7201	4	Nut-HF
7	114-8410	2	Screw-HHF
8	115-2216	1	Tube-HYD
9	115-2217	1	Tube-HYD
10	115-2218	1	Tube-HYD
11	115-2223	1	Tube-HYD
12	115-2224	1	Tube-HYD
13	340-18	1	Fitting-HYD, 90 DEG
13:1	237-79	1	O-Ring
13:2	237-22	1	O-Ring

Ref.	Part Number	Qty.	Description
14	340-77	1	Fitting-Elbow-90
14:1	237-22	1	O-Ring
14:2	237-42	1	O-Ring
15	340-88	1	Fitting-Str
15:1	237-22	1	O-Ring
15:2	237-78	1	O-Ring
16	340-94	1	Adapter
16:1	237-22	2	O-Ring
16:2	237-42	1	O-Ring
17	340-97	1	Fitting-Elbow 90
17:1	237-22	1	O-Ring
17:2	237-78	1	O-Ring

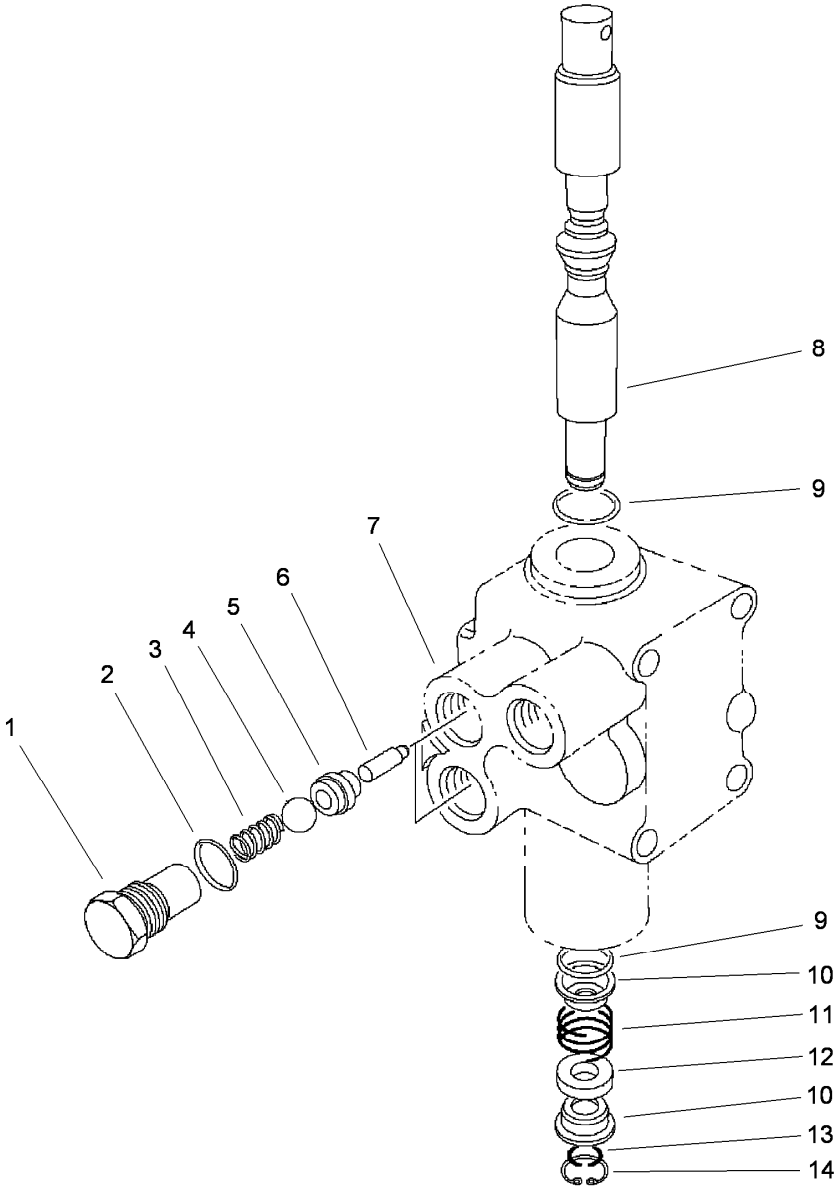

Control Valve Assembly No. 43-1950

Ref.	Part Number	Qty.	Description
1	22-8330	2	Plug
2	237-42	2	O-Ring
3	22-8340	2	Spring
4	22-8350	2	Ball
5	22-8370	2	Seat-Valve
6	22-8360	2	Pin
7		1	Body ●
8	22-8420	1	Spool
9	22-8500	2	O-Ring
10	22-8380	2	Retainer
11	22-8410	1	Spring
12	23-3030	1	Spacer
13	22-8480	1	Ring-Snap
14	22-8490	1	Ring-Snap

● Not serviced separately

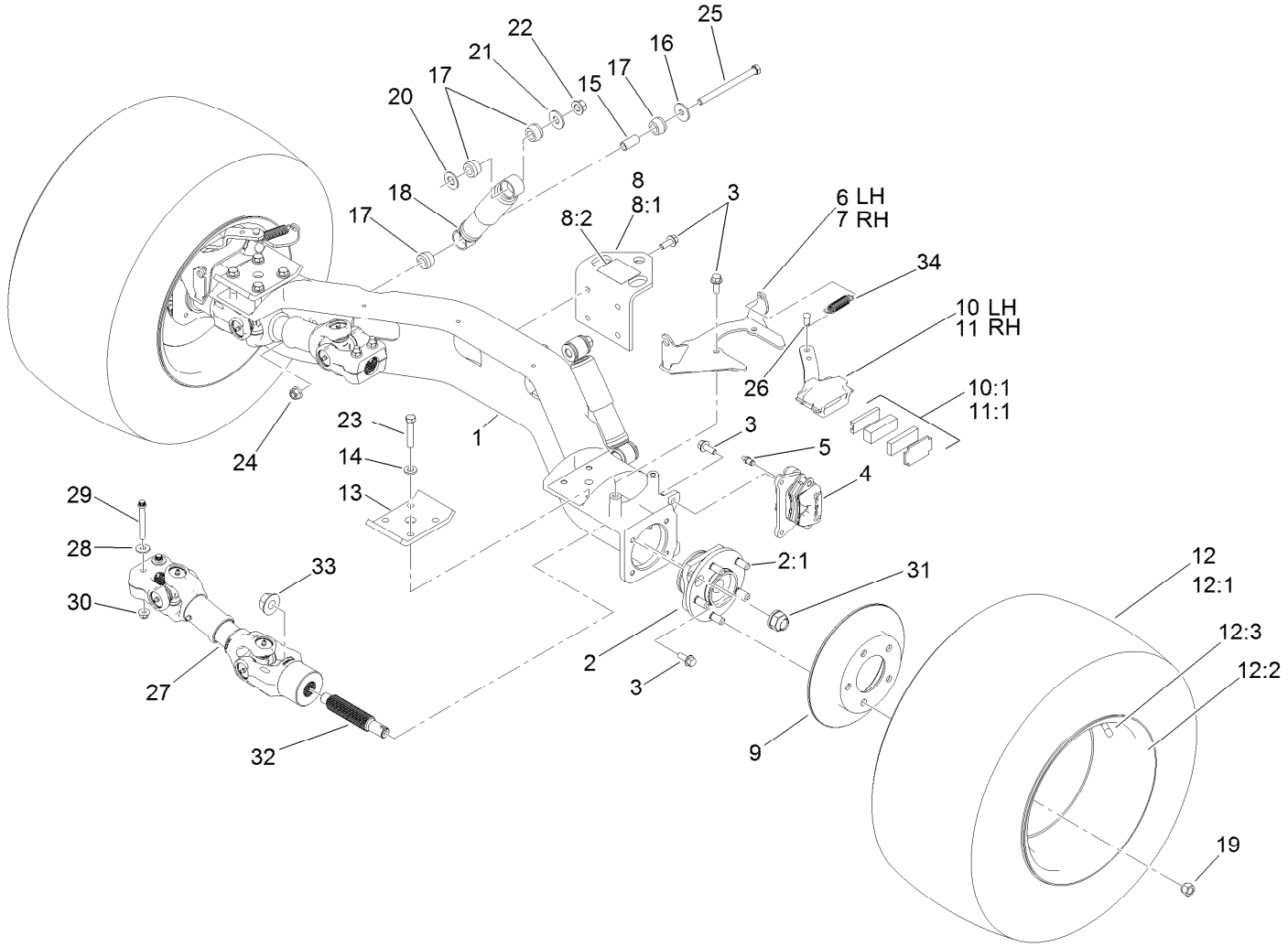

Rear Axle Assembly

Ref.	Part Number	Qty.	Description
1	119-9515	1	Axle-Rear
2	112-3214	2	Wheel Hub ASM
2:1	114-8299	5	Stud-Wheel
3	3234-11	20	Screw-HHF
4	119-9535	2	Brake Caliper ASM
5	119-9509	2	Screw-Bleed
6	115-2362-03	1	Bracket-Caliper, LH
7	115-2359-03	1	Bracket-Caliper, RH
8	115-7742	1	Hitch ASM
8:1	92-5951-03	1	Angle-Hitch
8:2	115-7740	1	Decal-Load, Towing
9	114-8351	2	Rotor-Brake
10	114-8365	1	Caliper-Mechanical, LH
10:1	115-7847	1	Parking Brake Pad Kit
11	114-8366	1	Caliper-Mechanical, RH
11:1	115-7847	1	Parking Brake Pad Kit
12	114-8288	2	Tire And Wheel ASM
12:1	106-7868	1	Tire
12:2	114-8259	1	Wheel
12:3	232-27	1	Stem-Valve
13	87-7470-03	2	Plate-Spring, Clamp

Ref.	Part Number	Qty.	Description
14	87-7480	8	Washer
15	87-3600	2	Spacer-Absorber, Shock
16	87-5330	2	Washer
17	87-3920	8	Bushing
18	87-3110	2	Absorber-Shock
19	242-50	10	Nut-Lug
20	3256-27	2	Washer-Flat
21	3256-6	2	Washer-Flat
22	99-5107	2	Nut-Lock
23	115-2398	8	Bolt-HH
24	114-8417	2	Nut-HF, NI
25	114-8424	2	Screw-HH
26	283-85	2	Pin-Clevis
27	114-8367	2	Driveshaft ASM
28	80-6990	4	Washer-Hardened
29	98-2939	4	Screw-Cap
30	104-8301	4	Nut-HF, NI
31	115-2164	2	Nut-Spindle
32	115-7771	2	Shaft, Splined
33	104-0753	2	Nut-Flange
34	104-6415	2	Spring-Return, Pedal

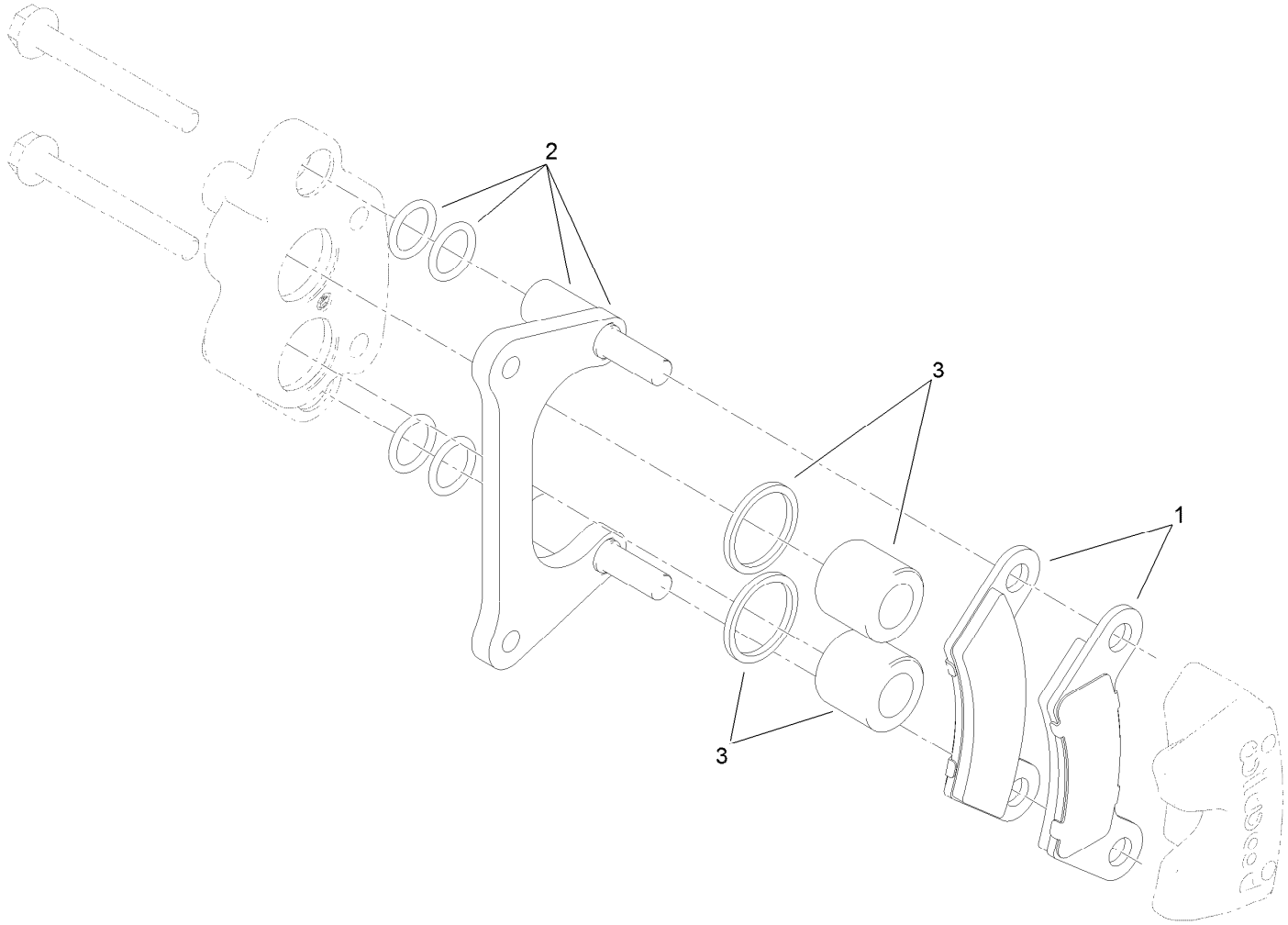

Brake Caliper Assembly No. 119-9535

Ref.	*Part Number*	*Qty.*	*Description*
1	119-9510	1	Pads-Brake
2	119-9511	1	Bracket Kit
3	119-9512	1	Piston Kit

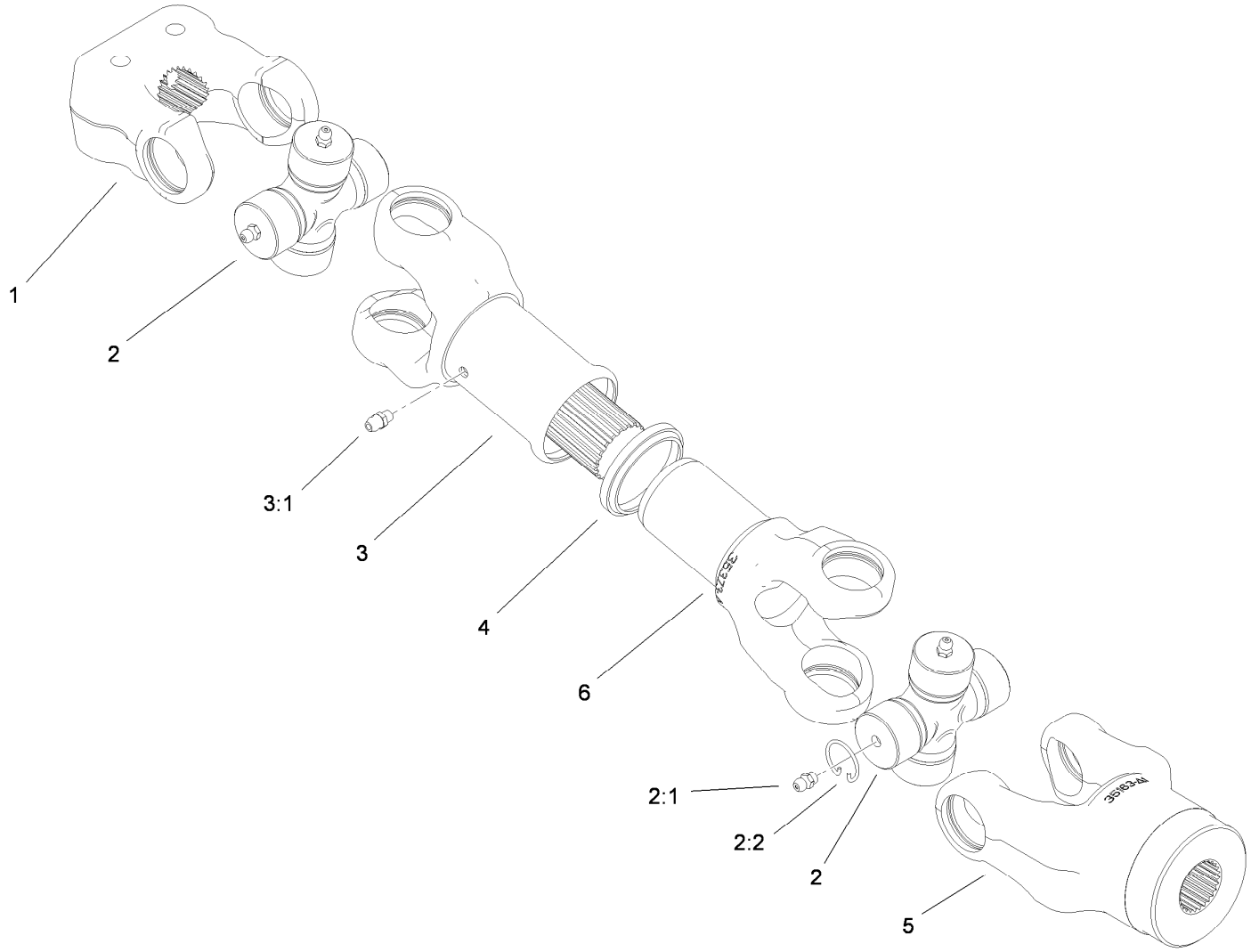

Driveshaft Assembly No. 114-8367

Ref.	*Part Number*	*Qty.*	*Description*
1	98-2940	1	Yoke
2	92-4187	2	Cross And Bearing Kit
2:1	302-58	4	Fitting-Straight
2:2	92-4188	4	Ring-Snap
3	92-4179	1	Yoke-Tube, Shaft And Seal
3:1	302-5	1	Fitting-Grease
4	92-4180	1	Seal
5	115-2351	1	Yoke
6	92-4182	1	Yoke-Telescoping

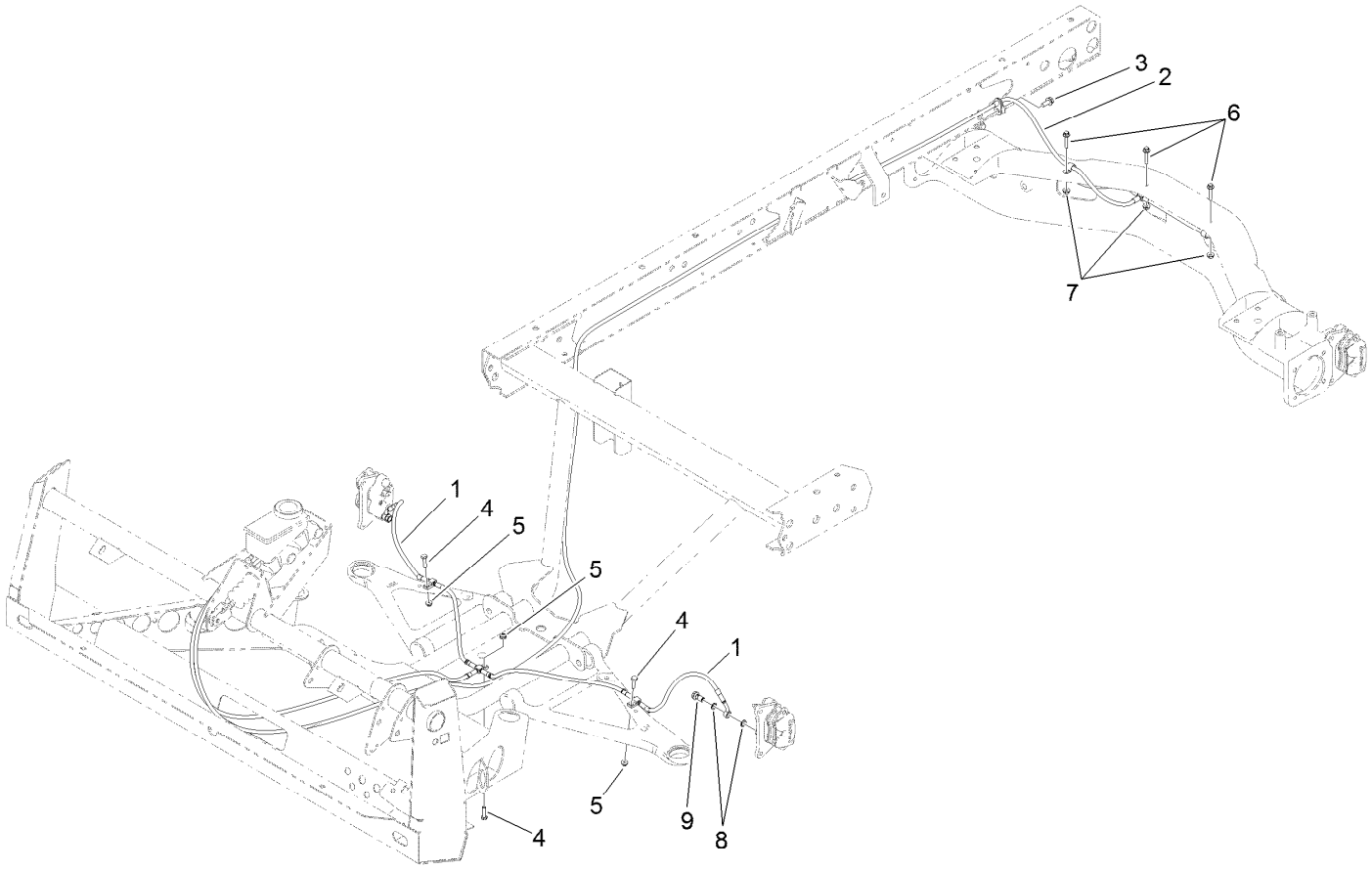

Front and Rear Brake Line Assembly

Ref.	*Part Number*	*Qty.*	*Description*
1	119-9682	1	Front Brake Line ASM
2	119-9681	1	Rear Brake Line ASM
3	32144-11	1	Screw-HWHTF
4	321-6	3	Screw-HH
5	104-7201	3	Nut-HF
6	3234-21	3	Screw-HHF
7	32128-33	3	Nut-HF
8	115-2341	8	Washer-Banjo
9	120-4875	4	Bolt-Flange, Banjo

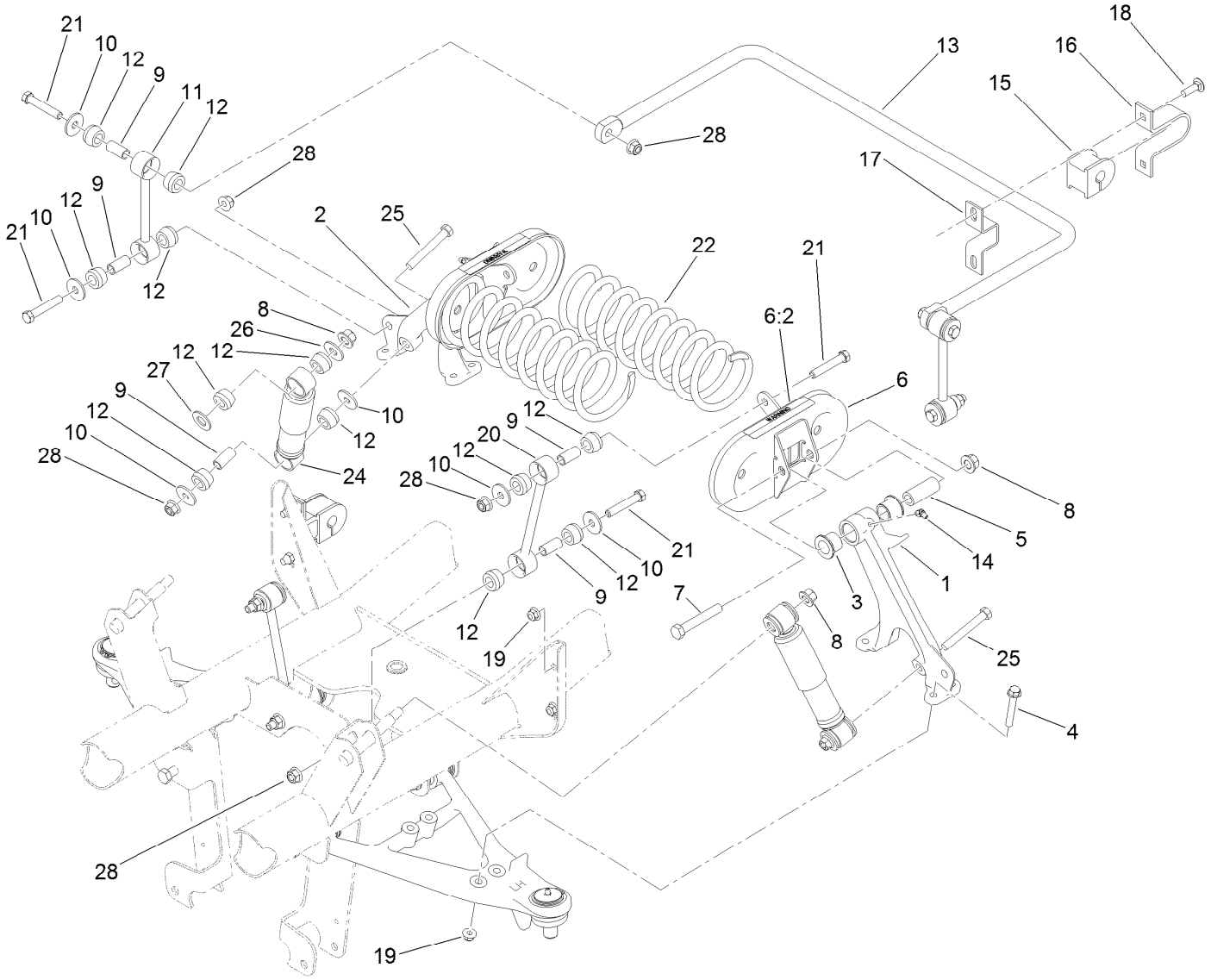

Front Suspension Assembly

Ref.	Part Number	Qty.	Description
1	87-0160	1	Tower-Control Arm, LH
2	87-0150	1	Tower-Control Arm, RH
3	33-3090	4	Bushing
4	3234-39	8	Screw-HHF
5	87-2500	2	Sleeve-Spring, Pivot
6	105-7958	2	Spring Cradle ASM
6:2	93-9879	1	Decal-Warning
7	325-13	2	Screw-HH
8	99-5107	4	Nut-Lock
9	87-3600	10	Spacer-Absorber, Shock
10	87-5330	12	Washer
11	87-3860-03	2	Link-Sway Bar, Anti
12	87-3920	24	Bushing
13	87-3850-03	1	Bar-Sway, Anti

Ref.	Part Number	Qty.	Description
14	302-11	2	Fitting-Lube, 45 DEG
15	87-3910	2	Bushing-Rubber
16	87-4010-03	2	Clamp-Bar, Sway
17	87-3890-03	2	Bracket-Bar, Sway
18	3231-25	4	Bolt-CARR
19	104-8301	12	Nut-HF, NI
20	106-2302-03	2	Link-Stabilizer
21	324-10	8	Screw-HH
22	105-4183-01	2	Spring-Compression
24	87-3110	2	Absorber-Shock
25	324-13	2	Screw-HH
26	3256-6	2	Washer-Flat
27	3256-27	2	Washer-Flat
28	114-8417	10	Nut-HF, NI

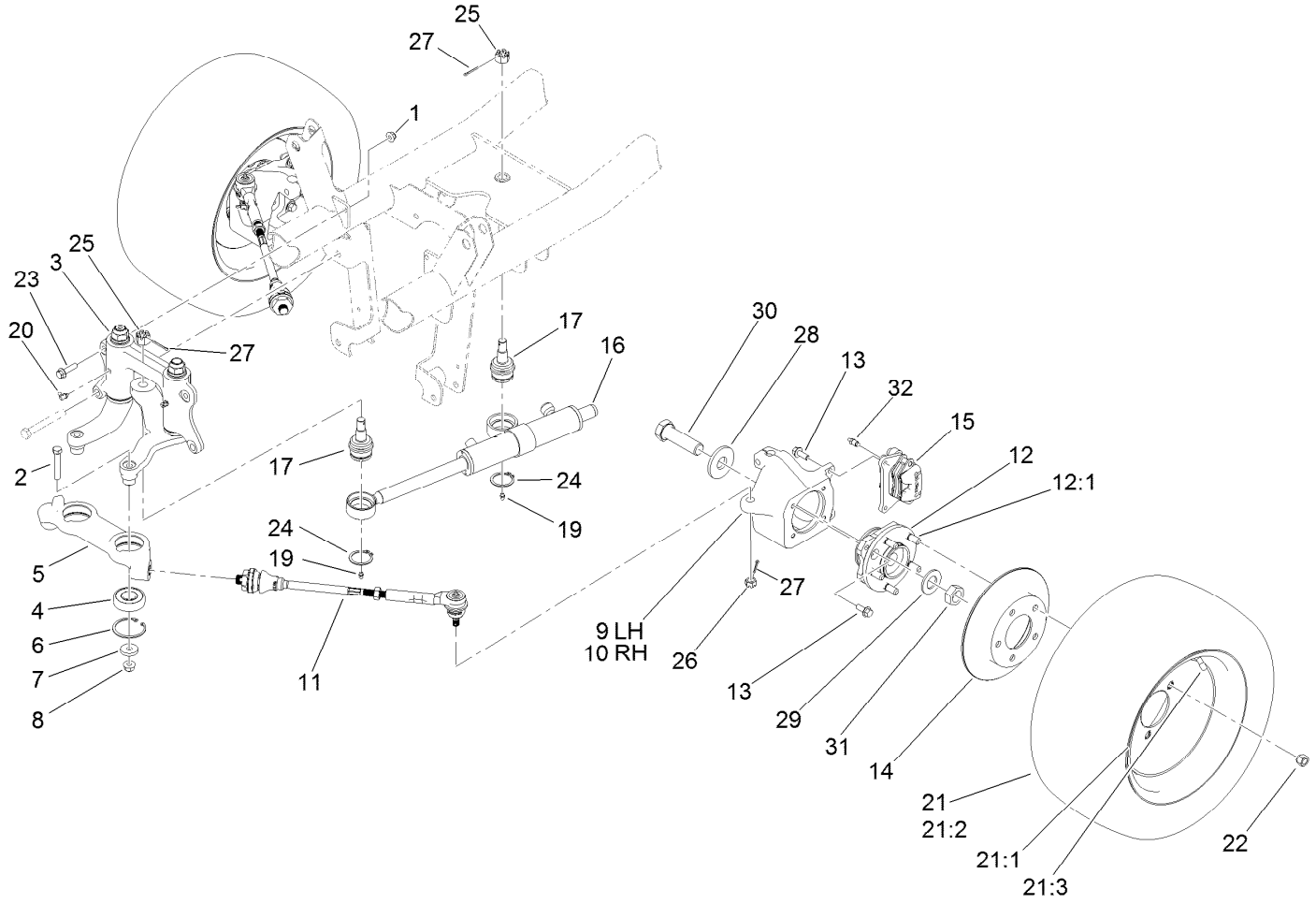

Steering and Front Wheel Assembly

Ref.	Part Number	Qty.	Description
1	104-8301	2	Nut-HF, NI
2	324-10	2	Screw-HH
3		1	Steering Linkage ASM ●
4	119-9548	2	Bearing-Ball
5	114-8296	1	Link-Center
6	32120-22	2	Ring-Snap, Internal
7	112843	2	Washer
8	114-8417	2	Nut-HF, NI
9	119-9513	1	Knuckle-LH
10	119-9514	1	Knuckle-RH
11	114-8356	2	Tie Rod ASM
12	112-3214	2	Wheel Hub ASM
12:1	114-8299	5	Stud-Wheel
13	3234-11	12	Screw-HHF
14	114-8351	2	Rotor-Brake
15	119-9535	2	Brake Caliper ASM
16	112-3217	1	HYD Cylinder ASM
17	106-6774	2	Joint-Ball

Ref.	Part Number	Qty.	Description
19	302-5	2	Fitting-Grease
20	302-60	2	Fitting-Grease
21	120-4902	2	Tire And Wheel ASM
21:1	120-4901	1	Wheel
21:2	114-8273	1	Tire
21:3	232-27	1	Stem-Valve
22	242-50	10	Nut-Lug
23	114-4681	2	Screw-HHF
24	32151-104	2	Ring-Retaining, External
25	32136-14	2	Nut-Hst
26	32136-3	2	Nut-SHH
27	3272-12	4	Pin-Cotter
28	104-0719	2	Washer-Hardened
29	3256-62	2	Washer-Flat
30	115-2173	2	Screw-HH
31	3296-49	2	Nut-Lock, NI
32	119-9509	2	Screw-Bleed

● Not serviced separately

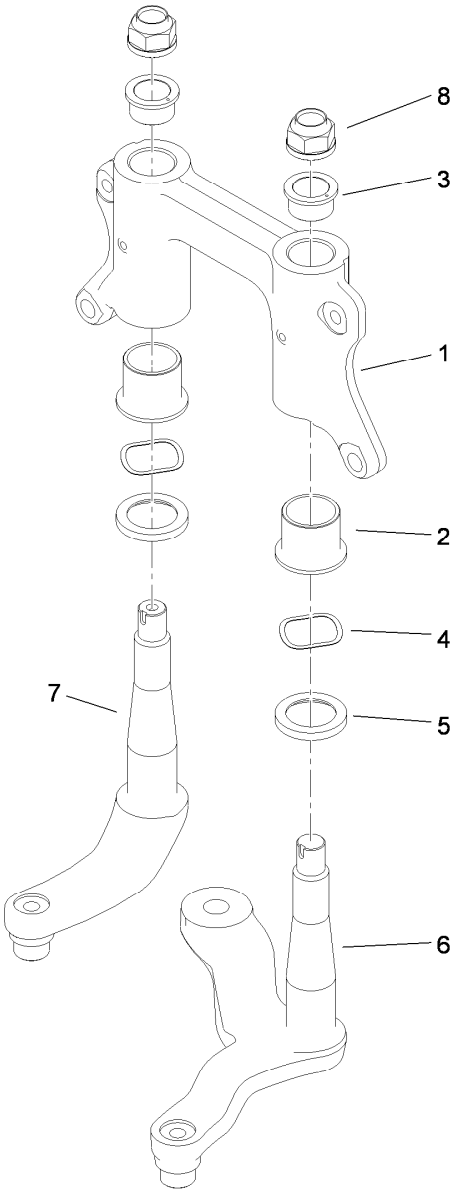

Steering Linkage Assembly

Ref.	*Part Number*	*Qty.*	*Description*
1	114-8389	1	Mount-Pivot
2	69-6470	2	Bushing-Castor
3	112-1626	2	Bushing-Flange
4	93-4632	2	Washer-Wavey
5	86-6560	2	Washer-Thrust
6	114-8256	1	Arm-Pitman
7	114-8298	1	Arm-Idler
8	115-2164	2	Nut-Spindle

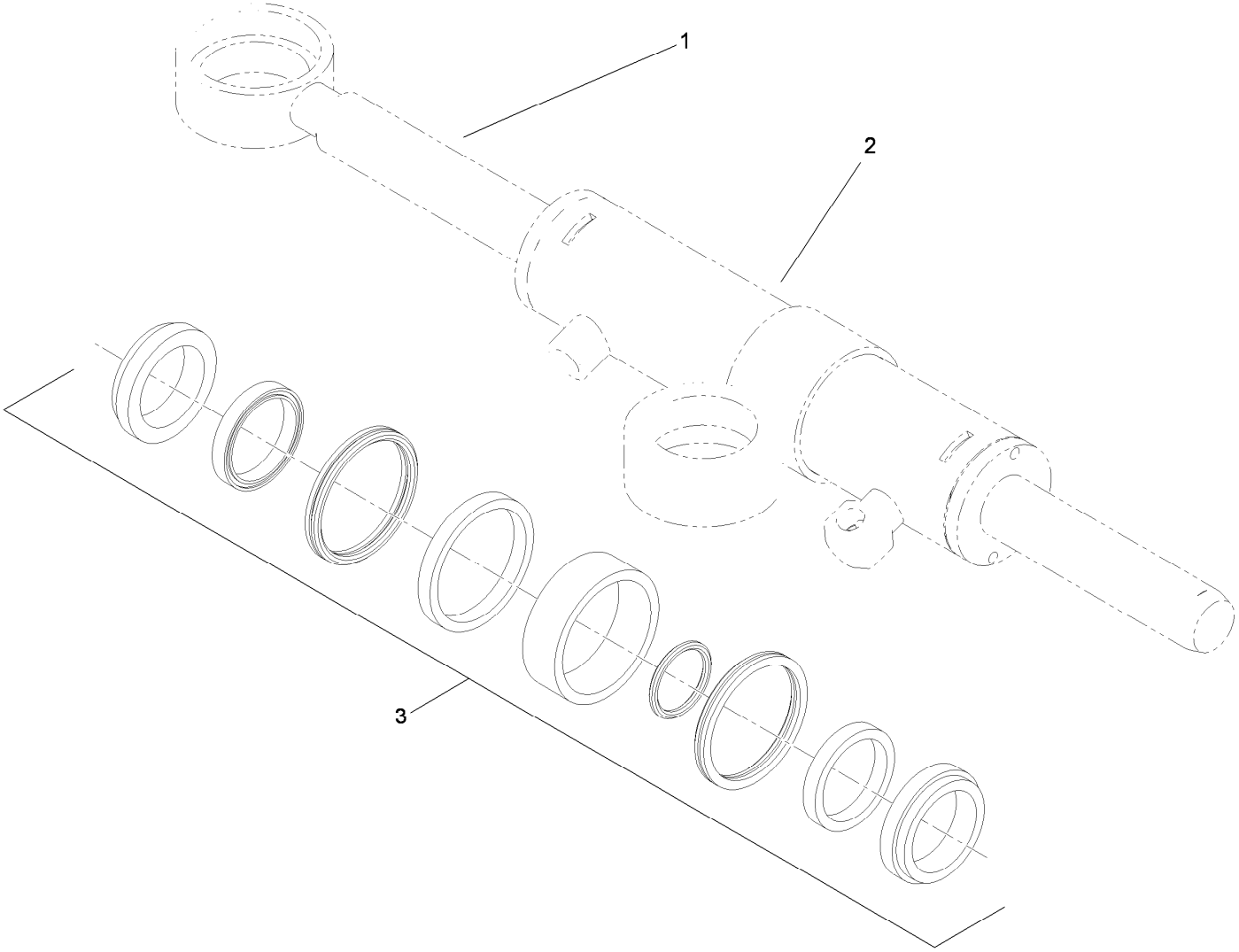

Hydraulic Cylinder Assembly No. 112-3217

Ref.	*Part Number*	*Qty.*	*Description*
1		1	Rod-Cylinder ●
2		1	Body-Cylinder ●
3	115-2160	1	Cylinder Repair Kit

● Not serviced separately

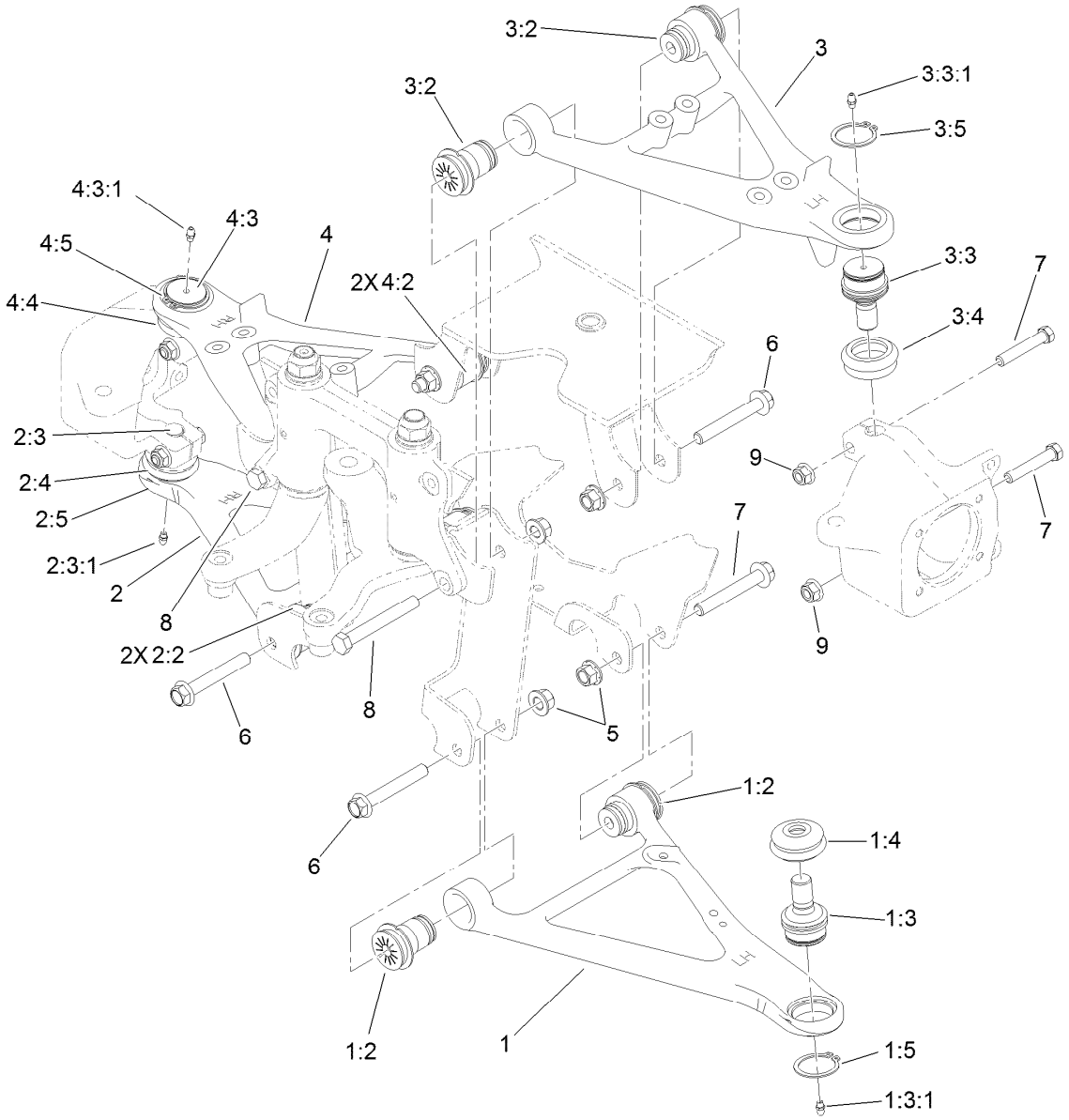

Front Control Arm Assembly

Ref.	Part Number	Qty.	Description
1	115-2405	1	Lower LH Control Arm ASM
1:2	87-1450	2	Bushing-Flange
1:3	115-2165	1	Ball Joint
1:3:1	302-5	1	Fitting-Grease
1:4	87-2420	1	Seal-Joint, Ball
1:5	32151-104	1	Ring-Retaining, External
2	115-2407	1	Lower RH Control Arm ASM
2:2	87-1450	2	Bushing-Flange
2:3	115-2165	1	Ball Joint
2:3:1	302-5	1	Fitting-Grease
2:4	87-2420	1	Seal-Joint, Ball
2:5	32151-104	1	Ring-Retaining, External
3	115-2404	1	Upper LH Control Arm ASM
3:2	87-1450	2	Bushing-Flange
3:3	115-2165	1	Ball Joint

Ref.	Part Number	Qty.	Description
3:3:1	302-5	1	Fitting-Grease
3:4	87-2420	1	Seal-Joint, Ball
3:5	32151-104	1	Ring-Retaining, External
4	115-2406	1	Upper RH Control Arm ASM
4:2	87-1450	2	Bushing-Flange
4:3	115-2165	1	Ball Joint
4:3:1	302-5	1	Fitting-Grease
4:4	87-2420	1	Seal-Joint, Ball
4:5	32151-104	1	Ring-Retaining, External
5	99-5107	8	Nut-Lock
6	114-8419	6	Screw-HHF
7	324-10	4	Screw-HH
8	325-17	2	Screw-HH
9	114-8417	4	Nut-HF, NI

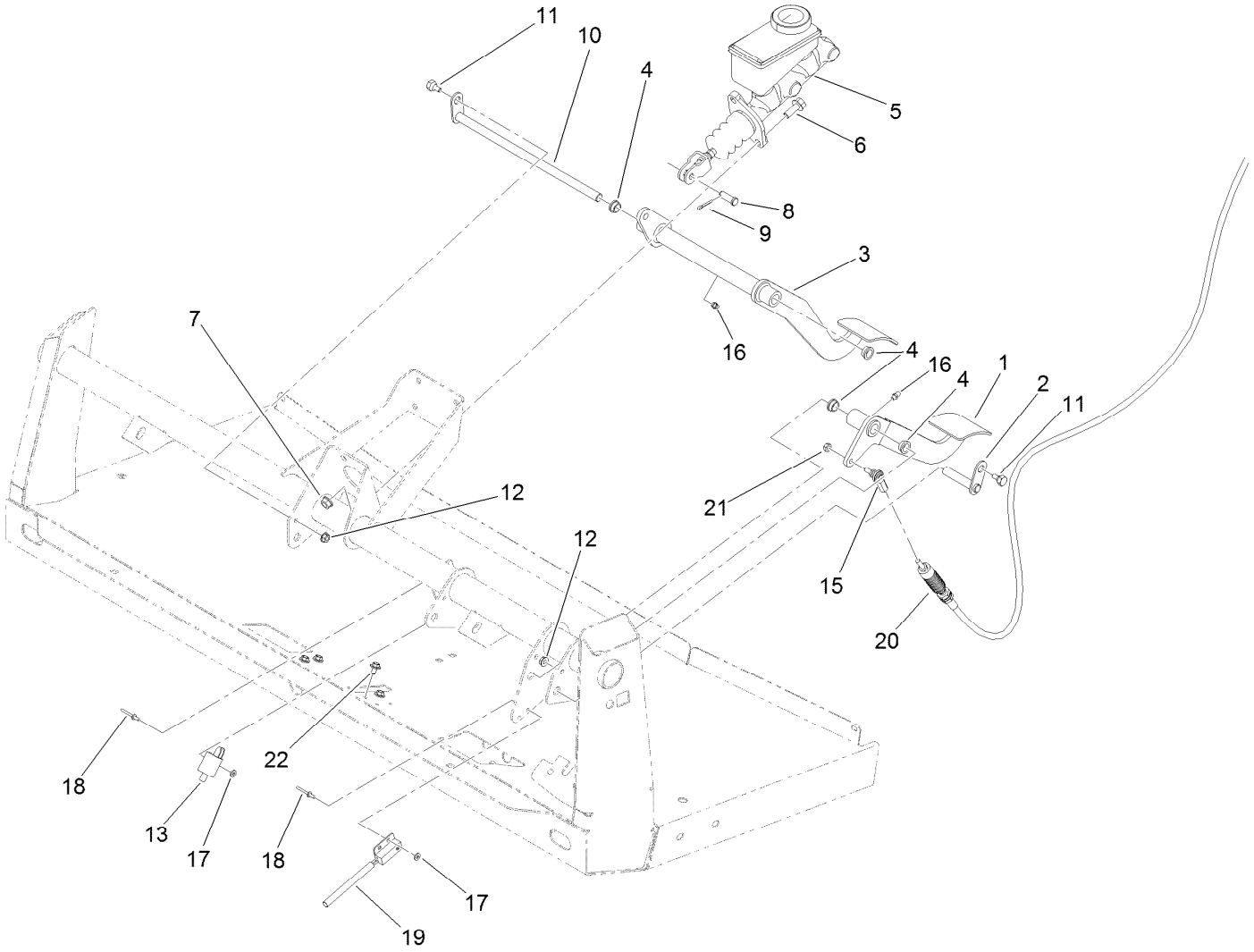

Brake and Clutch Pedal Assembly

Ref.	Part Number	Qty.	Description
1	115-2271-03	1	Pedal-Clutch
2	115-2269	1	Pin-Pivot
3	120-5023-03	1	Pedal-Brake
4	256-156	4	Bushing-Flange
5	104-6782	1	Master Cylinder ASM
6	3234-11	2	Screw-HHF
7	3290-357	2	Nut-HHF, Whiz
8	283-2	1	Pin-Clevis
9	3272-10	1	Pin-Cotter
10	106-2475	1	Shaft-Brake
11	63-3410	2	Screw-Shoulder

Ref.	Part Number	Qty.	Description
12	32128-33	2	Nut-HF
13	95-1653	1	Switch-Pole, Single
15	110-2554	1	Rod End-Spherical
16	302-5	2	Fitting-Grease
17	3256-21	4	Washer-Flat
18	3269-25	4	Rivet-Pop
19	105-0023	1	Switch-Proximity
20	115-2284	1	Cable-Clutch
21	3296-13	1	Nut-Lock, NI
22	46-6810	4	Screw And Washer ASM

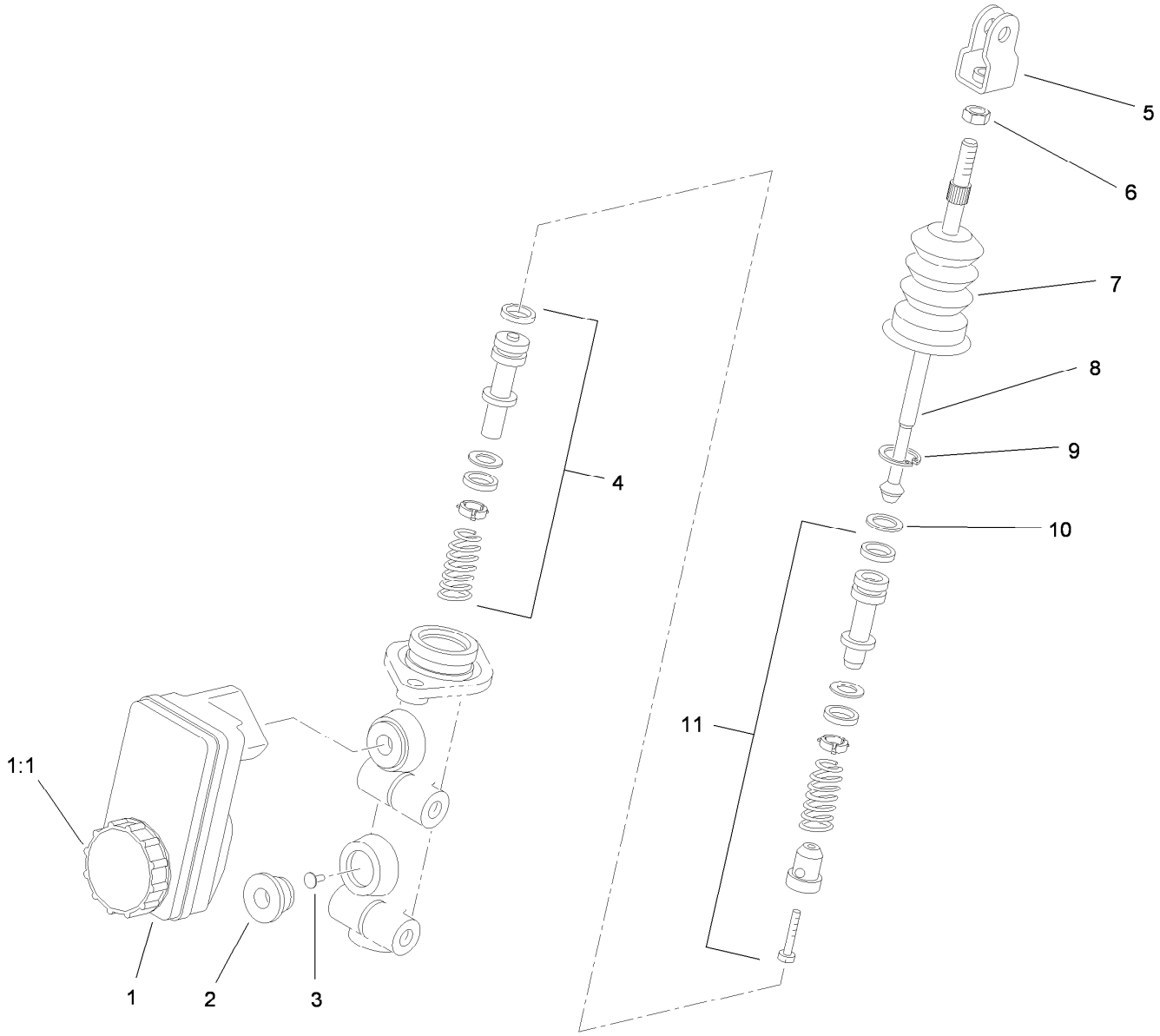

Master Cylinder Assembly No. 104-6782

Ref.	*Part Number*	*Qty.*	*Description*
1	104-6845	1	Reservoir ASM
1:1	92-4112	1	Cap ASM
2	93-8971	2	Seal-Port, Flange
3	92-4103	1	Pin-Stop
4	92-4102	1	Secondary Piston ASM
5	92-4110	1	Clevis
6	21-0360	1	Nut-Hex
7	94-5209	1	Cover-Dust
8	94-5210	1	Rod-Push
9	92-4109	1	Ring-Snap
10	92-4108	1	Retainer-Washer
11	92-4101	1	Primary Piston ASM

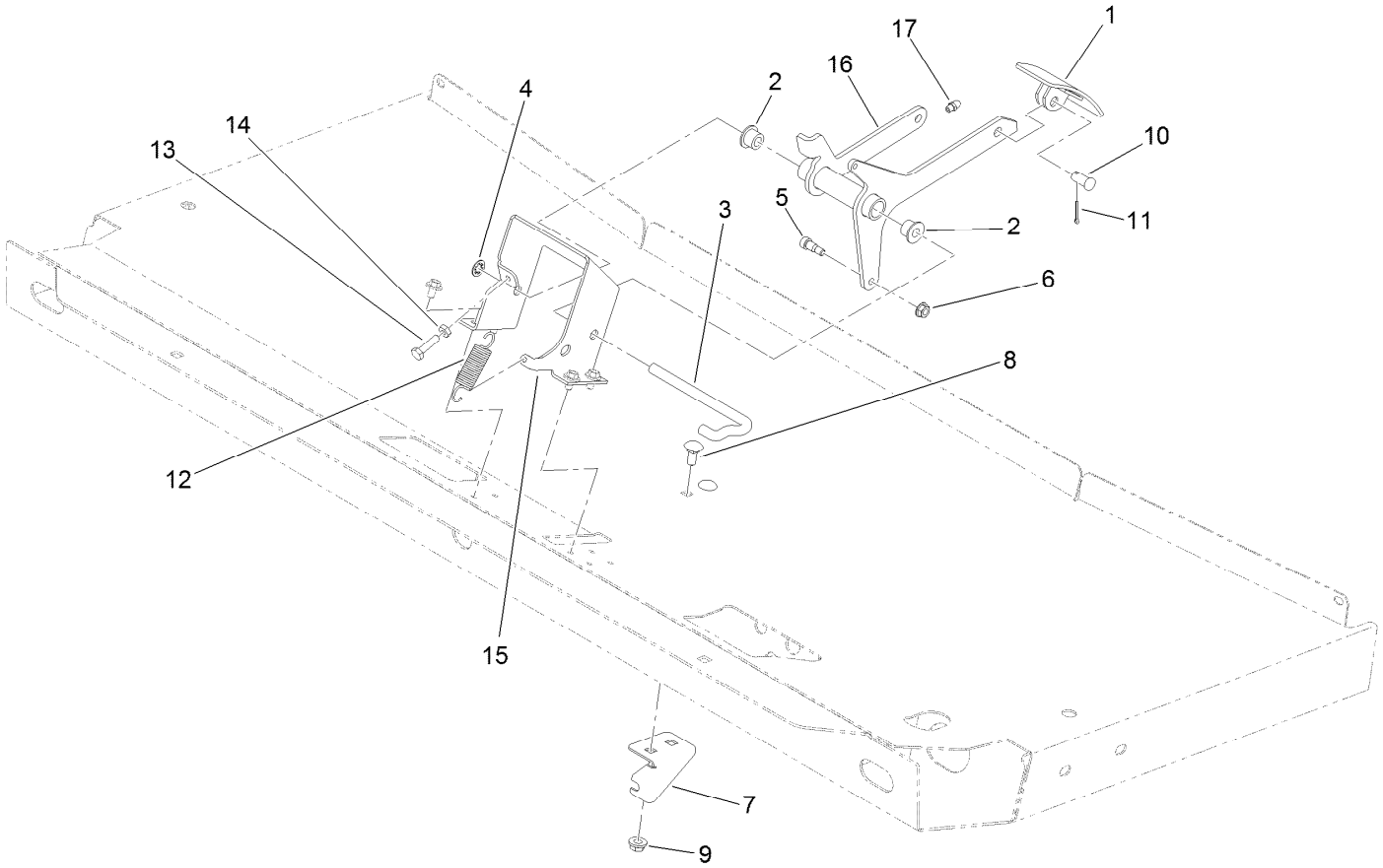

Accelerator Pedal Assembly

Ref.	Part Number	Qty.	Description
1	93-8969-03	1	Pedal
2	256-259	2	Bushing-Flange
3	87-2880	1	Shaft-Pedal, Accelerator
4	32151-56	1	Ring-Retaining, External
5	119-4881	1	Bolt-Shoulder
6	32128-33	1	Nut-HF
7	120-4982	1	Bracket-Mount, Cable
8	3230-1	2	Bolt-CARR
9	32128-20	2	Nut-HF
10	283-85	1	Pin-Clevis
11	3272-6	1	Pin-Cotter
12	67-1450	1	Spring-Idler
13	321-6	1	Screw-HH
14	3218-1	1	Nut-Jam
15	120-5082-03	1	Bracket-Mount, Pedal
16	120-4983-03	1	Pedal-Accelerator
17	302-5	1	Fitting-Grease

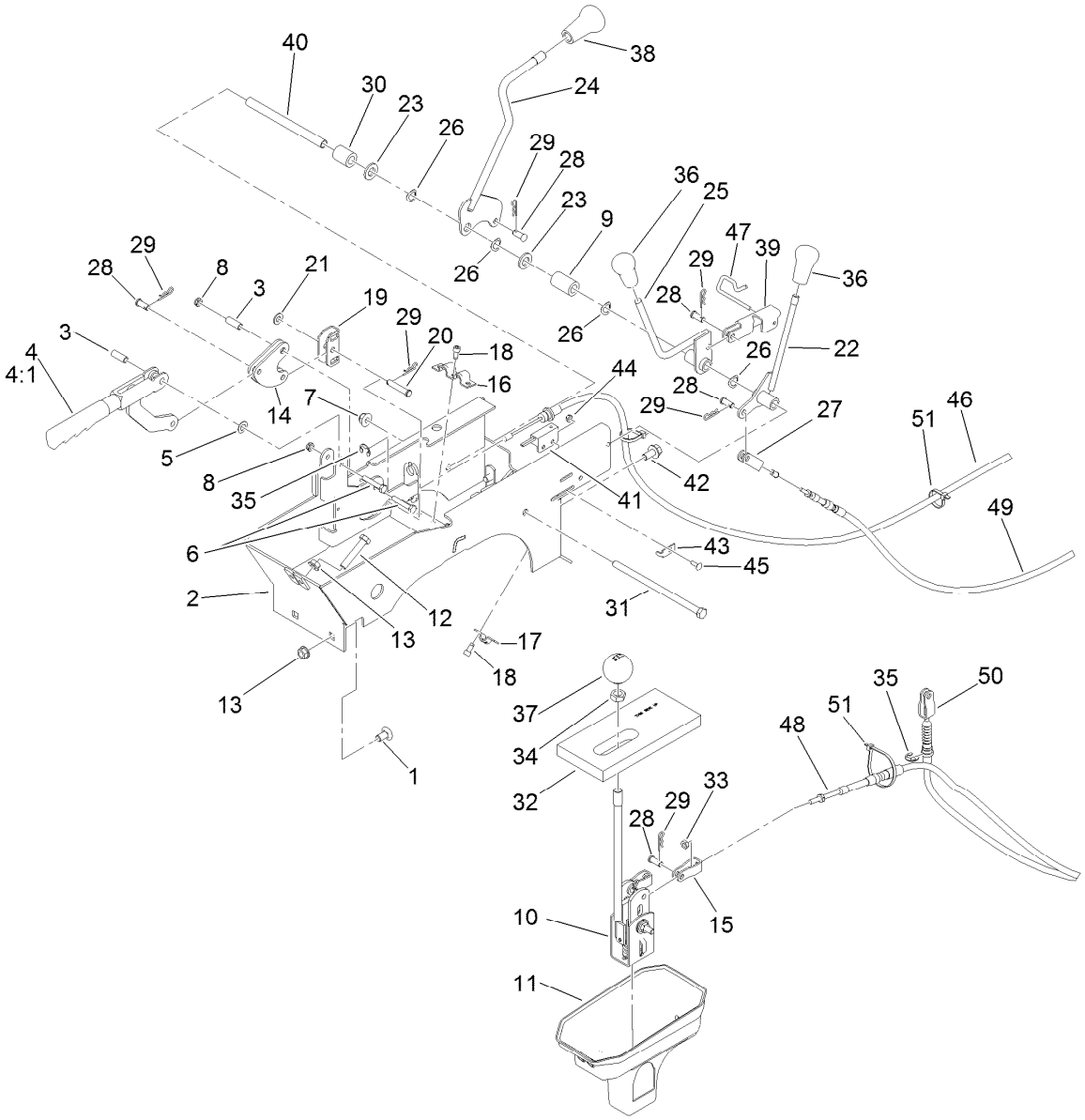

Console Assembly

Ref.	Part Number	Qty.	Description
1	3231-21	2	Screw-CARR
2	108-6914-03	1	Support-Lever
3	114402	2	Spacer
4	104-6842	1	Lever-Brake, Park
4:1	106-7972	1	Grip-Handle
5	3290-477	1	Washer-Curved
6	321-9	2	Screw-HH
7	104-8301	1	Nut-HF, NI
8	3296-56	2	Nut-Lock, NI
9	120-5037	1	Spacer
10	106-7887	1	Shift ASM
11	106-2376	1	Boot-Shift, Lower
12	323-10	2	Screw-HH
13	3290-357	4	Nut-HHF, Whiz
14	106-7814	2	Bellcrank
15	87-2310	2	Clevis-Cable
16	87-4960	1	Clamp-Cable
17	87-4340	1	Clamp-Cable
18	65-5220	5	Screw-HSH, Thread Forming
19	87-3480	1	Bracket-Equalizer, Cable
20	94-3829	1	Pin-Clevis
21	3256-23	1	Washer-Plain
22	106-7828	1	Lever
23	33096-00	2	Washer-Flat
24	112-3008	1	Lever-Lock, Differential
25	106-7960	1	Lever-HYD
26	3290-221	4	Washer-Spring
27	87-7160	1	Clevis-Cable
28	283-62	6	Pin-Clevis
29	3290-307	7	Pin-Cotter
30	66-6501	1	Spacer-Wheel
31	323-36	1	Screw-HH
32	87-6570	1	Seal-Boot, Lower
33	3220-1	2	Nut-Jam
34	3218-18	1	Nut-Jam
35	32120-47	3	Ring-Retaining, External
36	106-7903	2	Knob-Control
37	87-6720	1	Knob-Shift
38	106-7952	1	Knob
39	115-2250	1	Link
40	106-7833	1	Spacer

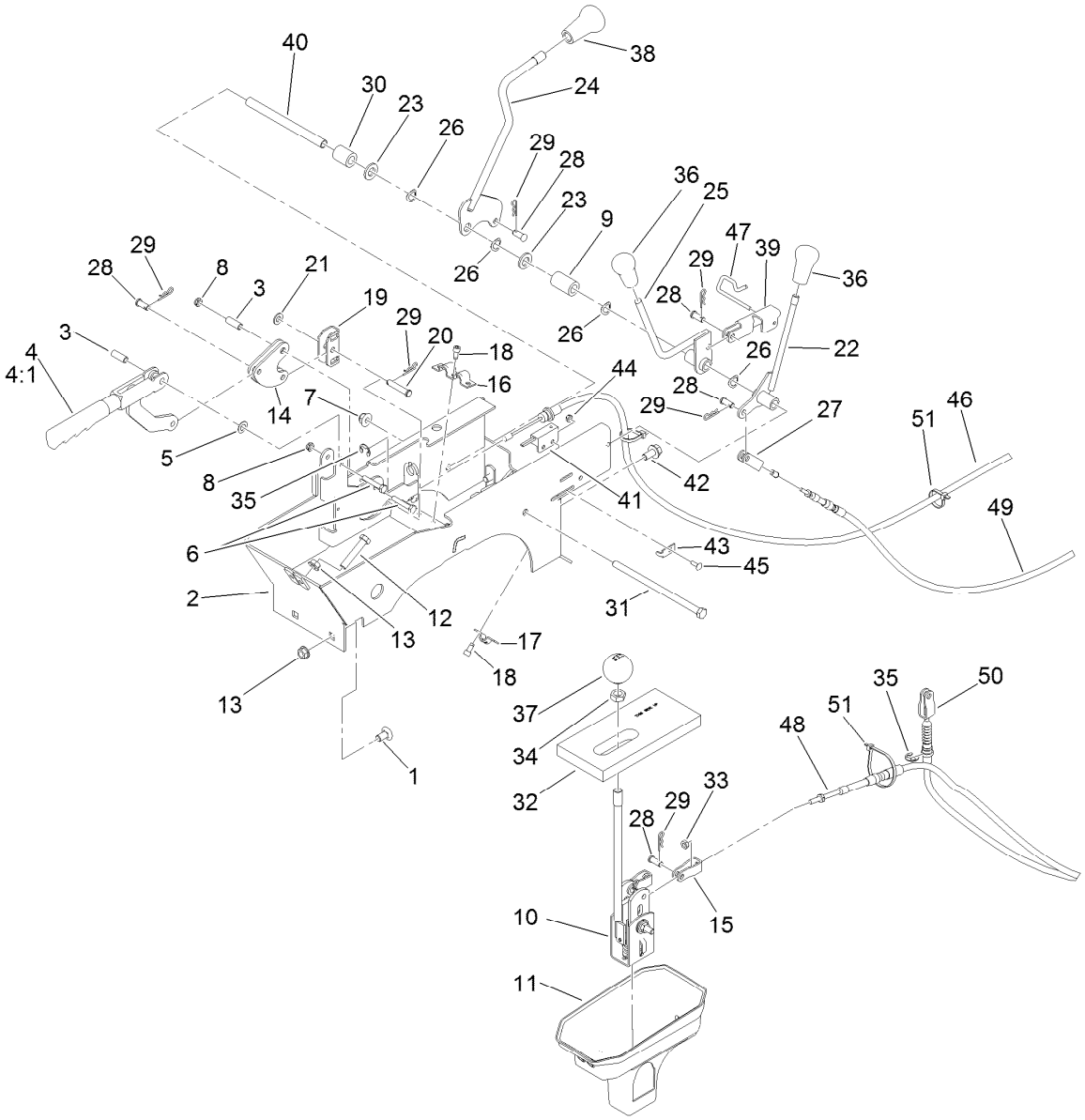

Console Assembly (continued)

Ref.	Part Number	Qty.	Description
41	100-1270	1	Switch-Proximity
42	3234-12	2	Screw-HHF
43	100-4872	1	Plate-Switch, Neutral
44	3296-12	1	Nut-Lock, NI
45	3229-34	1	Screw-CARR
46	115-2283	2	Cable-Brake, Park

Ref.	Part Number	Qty.	Description
47	115-2350	1	Pin-Retainer
48	115-7811	2	Cable-Selector, Gear
49	115-7812	1	Cable-Hi Low
50	115-2287	1	Cable-Lock, Differential
51	3290-379	5	Tie-Cable

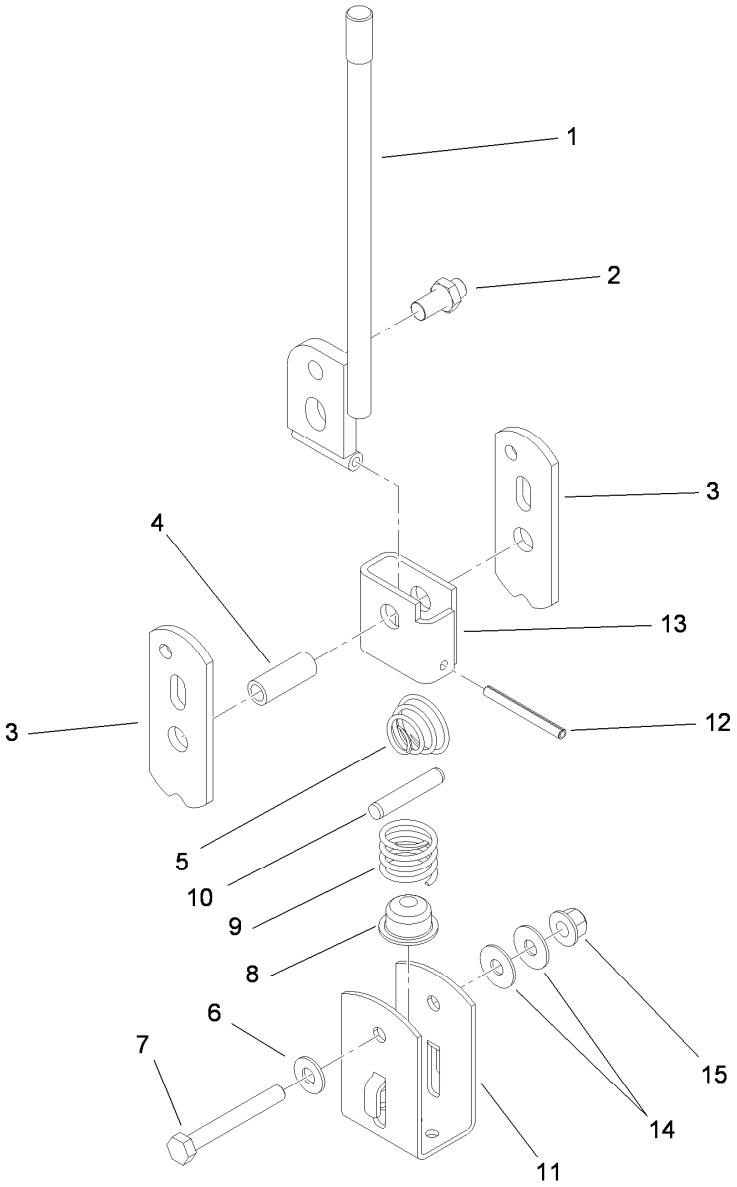

Shift Assembly No. 106-7887

Ref.	Part Number	Qty.	Description
1	87-2040	1	Lever-Shift
2	87-3650	1	Pin-Shift
3	87-3540	2	Link-Shift
4	87-2520	1	Tube-Pivot
5	87-2900	1	Spring-Compression
6	87-8640	1	Washer-Flat
7	322-12	1	Screw-HH
8	87-3530	1	Button-Shifter
9	87-3660	1	Spring-Compression
10	3290-507	1	Pin-Dowel
11	87-3520	1	Clevis
12	32121-48	1	Pin-Spring
13	87-6040	1	Bracket-Shifter
14	3290-456	2	Washer-Belleville
15	104-8300	1	Nut-HF, NI

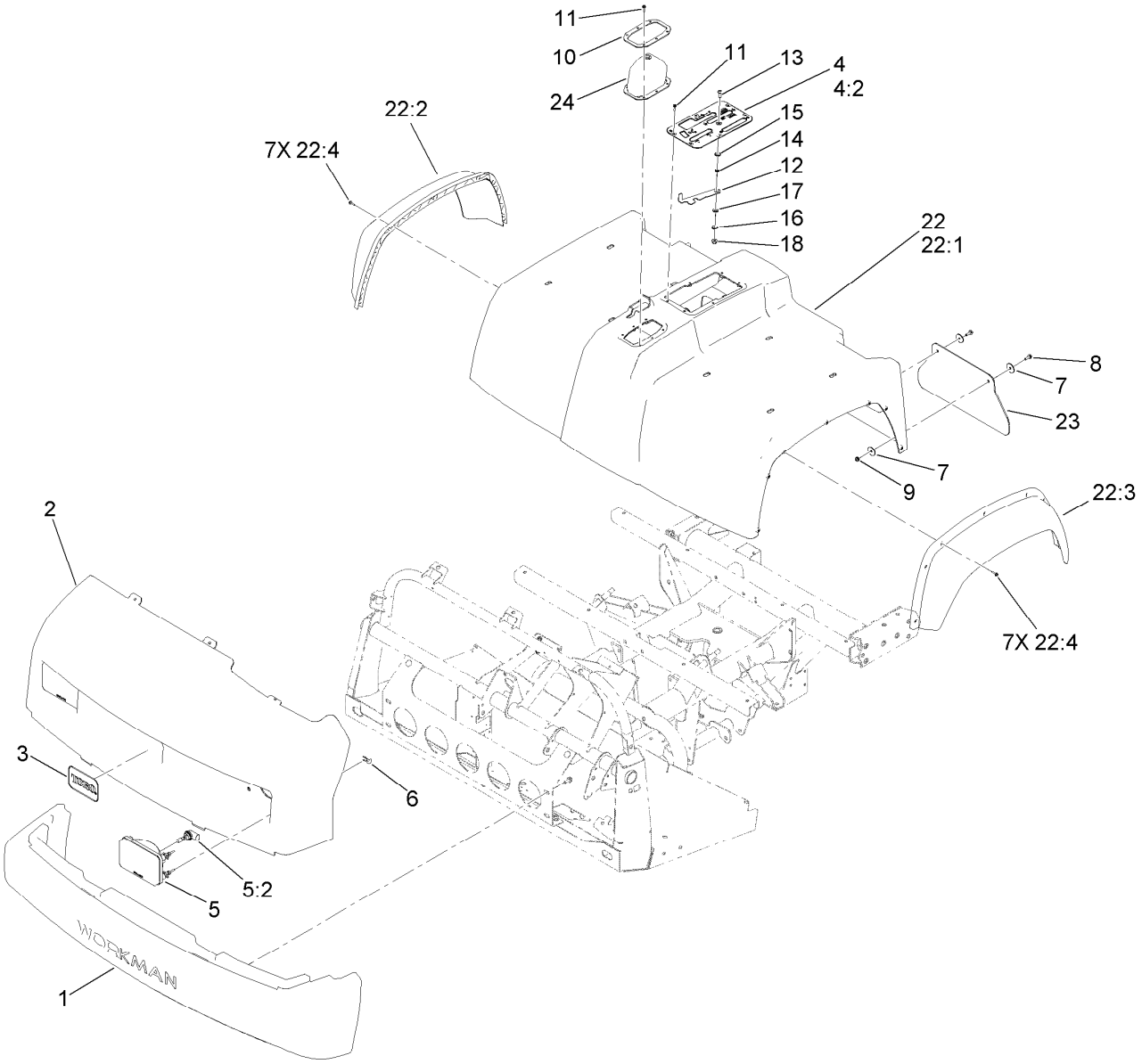

Bumper, Hood and Seat Base Assembly

Ref.	Part Number	Qty.	Description
1	112-3185	1	Bumper
2	112-3183	1	Hood
3	117-4950	1	Decal
4	106-7886	1	Control Plate ASM
4:2	106-2377	1	Decal-Console
5	114-8322	2	Headlight ASM
5:2	115-2395	1	Bulb-Light
6	114-8341	6	Clip
7	3256-55	8	Washer-Flat
8	3234-4	4	Screw-HHF
9	104-7201	4	Nut-HF
10	87-3760-03	1	Plate-Boot, Shift
11	98-1375	12	Screw-HWH
12	106-7984	1	Lever-Detent
13	3274-55	1	Screw-HSBH
14	82-4240	1	Spacer-Bearing
15	94-8196	1	Washer-Nylon
16	3290-221	1	Washer-Spring
17	3256-23	1	Washer-Plain
18	104-8300	1	Nut-HF, NI
22		1	Seat Base ASM ●
22:1	114-8406	1	Base-Seat
22:2	114-8407	1	Fender-Front, RH
22:3	114-8408	1	Fender-Front, LH
22:4	117-5036	14	Screw-HWH
23	106-2378	2	Mudflap
24	87-8620	1	Boot-Shift

● Not serviced separately

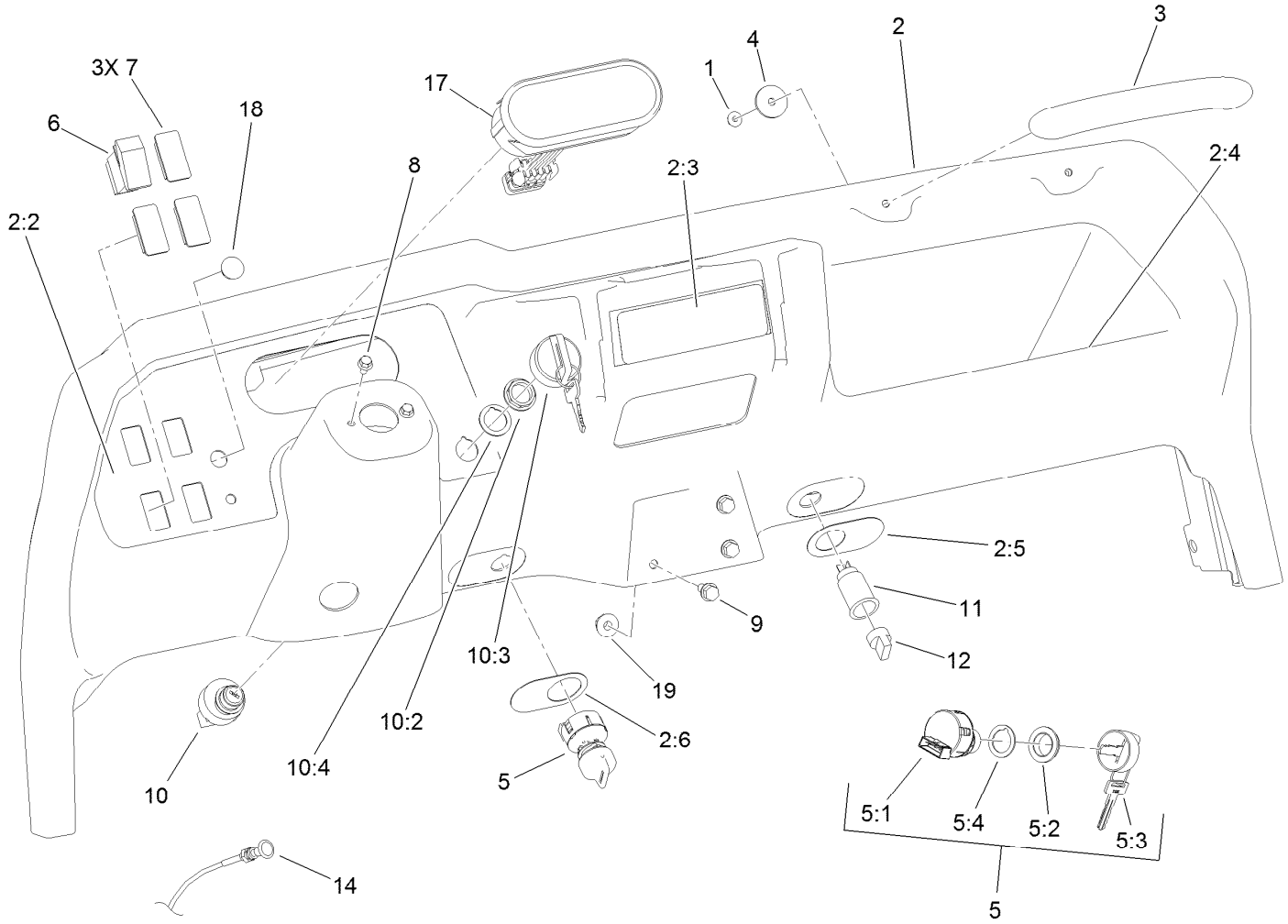

Dash Assembly

Ref.	Part Number	Qty.	Description
1	104-7201	2	Nut-HF
2	115-7912	1	Dash ASM
2:2	115-2281	1	Decal-Dash
2:3	115-7746	1	Decal-Danger
2:4	115-2282	1	Decal-Warning, Dash
2:5	106-2353	1	Decal-Powerpoint
2:6	106-2355	1	Decal-Switch, Supervisor
3	117-4948	1	Handle-Grab
4	103995	2	Washer
5	110-2580	1	Switch-Key, Supervisor
5:1		1	Switch-Key ●
5:2	108-8660	1	Nut-Mounting
5:3	110-5221	1	Set-Key, Supervisor
5:4	108-8659	1	Washer-Backup

Ref.	Part Number	Qty.	Description
6	95-8999	1	Switch
7	99-7420	3	Plug-Hole
8	33103-012	2	Screw-HHF
9	3234-5	3	Screw-HHF
10	106-5269	1	Ignition Switch ASM
10:2	108-8660	1	Nut-Mounting
10:3	106-5270	1	Ignition Key Set
10:4	108-8659	1	Washer-Backup
11	99-7411	1	Point-Power
12	99-7416	1	Cap
14	106-7943	1	Cable-Control, Choke
17	114-8300	1	Cluster-Instrument
18	94-5627	1	Plug
19	104-8300	3	Nut-HF, NI

● Not serviced separately

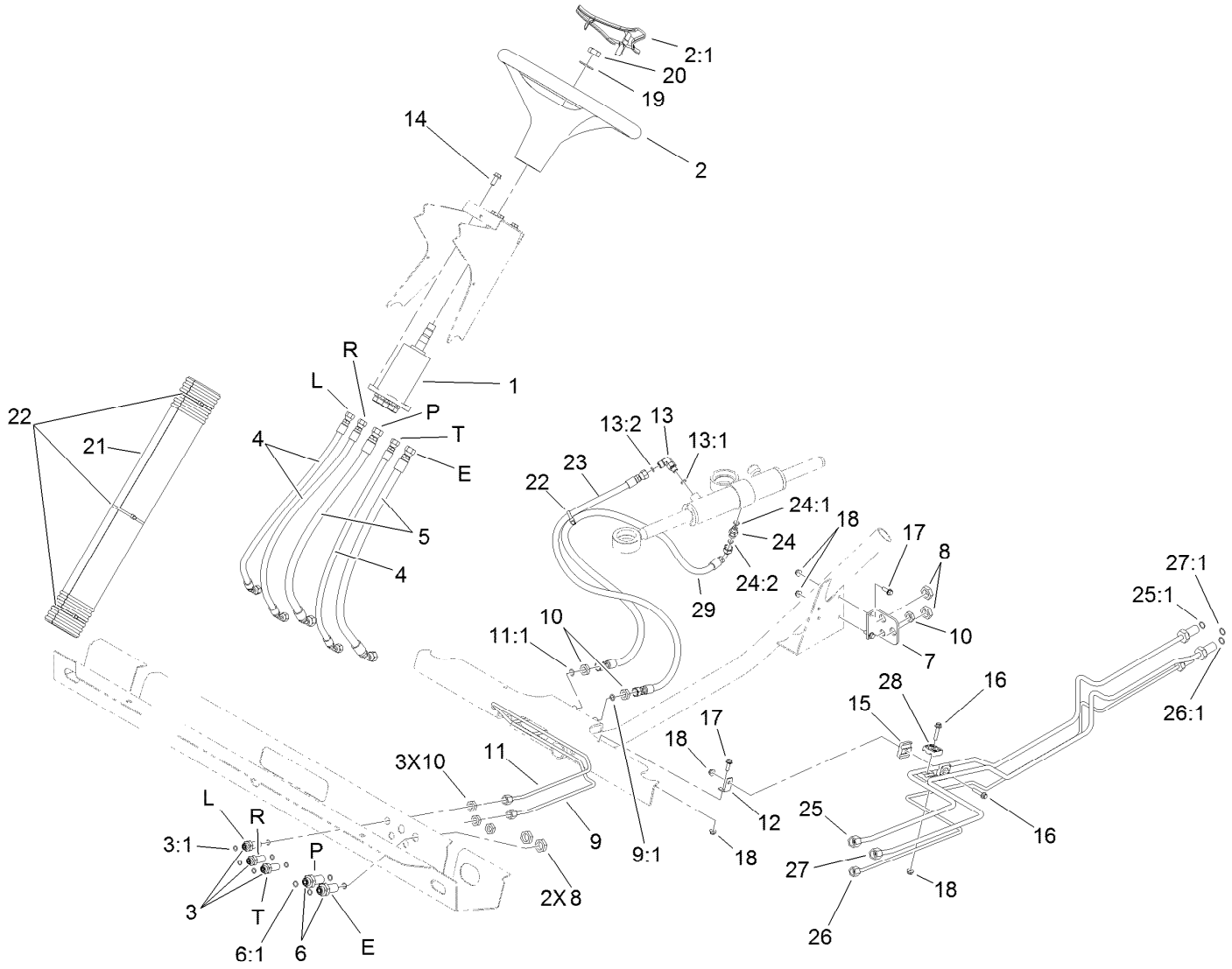

Steering Hydraulic Assembly

Ref.	Part Number	Qty.	Description
1	120-4813	1	Pump-Steering
2	98-1471	1	Wheel-Steering
2:1	98-1468	1	Cover-Wheel, Steering
3	94-1444	3	Union-Bulkhead
3:1	237-21	2	O-Ring
4	106-7974	3	Hose-HYD
5	106-7975	2	Hose-HYD
6	340-71	2	Fitting-Straight, Bulkhead
6:1	237-22	2	O-Ring
7	106-7801-03	1	Bracket-Line, Steering
8	340-70	4	Nut-Lock
9	106-7804	1	Tube-HYD
9:1	237-21	1	O-Ring
10	3219-10	6	Nut-Hex
11	106-7806	1	Tube-HYD
11:1	237-21	1	O-Ring
12	106-7807	1	Bracket-Line, Steering
13	340-132	1	Fitting-90 DEG
13:1	237-78	1	O-Ring
13:2	237-21	1	O-Ring
14	98-7977	4	Screw-HHF

Ref.	Part Number	Qty.	Description
15	106-7839	2	Clamp-Tube
16	3234-21	2	Screw-HHF
17	3234-4	3	Screw-HHF
18	104-7201	5	Nut-HF
19	3256-27	1	Washer-Flat
20	3296-33	1	Nut-Lock, NI
21	106-6713	1	Cover-Lines, Steering
22	3290-379	4	Tie-Cable
23	108-6505	1	Hose ASM
24	340-92	1	Fitting-Straight
24:1	237-78	1	O-Ring
24:2	237-21	1	O-Ring
25	115-7701	1	Tube-HYD
25:1	237-22	1	O-Ring
26	115-7702	1	Tube-HYD
26:1	237-22	1	O-Ring
27	115-7703	1	Tube-HYD
27:1	237-21	1	O-Ring
28	56-7973	2	Clamp-Tube
29	117-4861	1	Hose-HYD

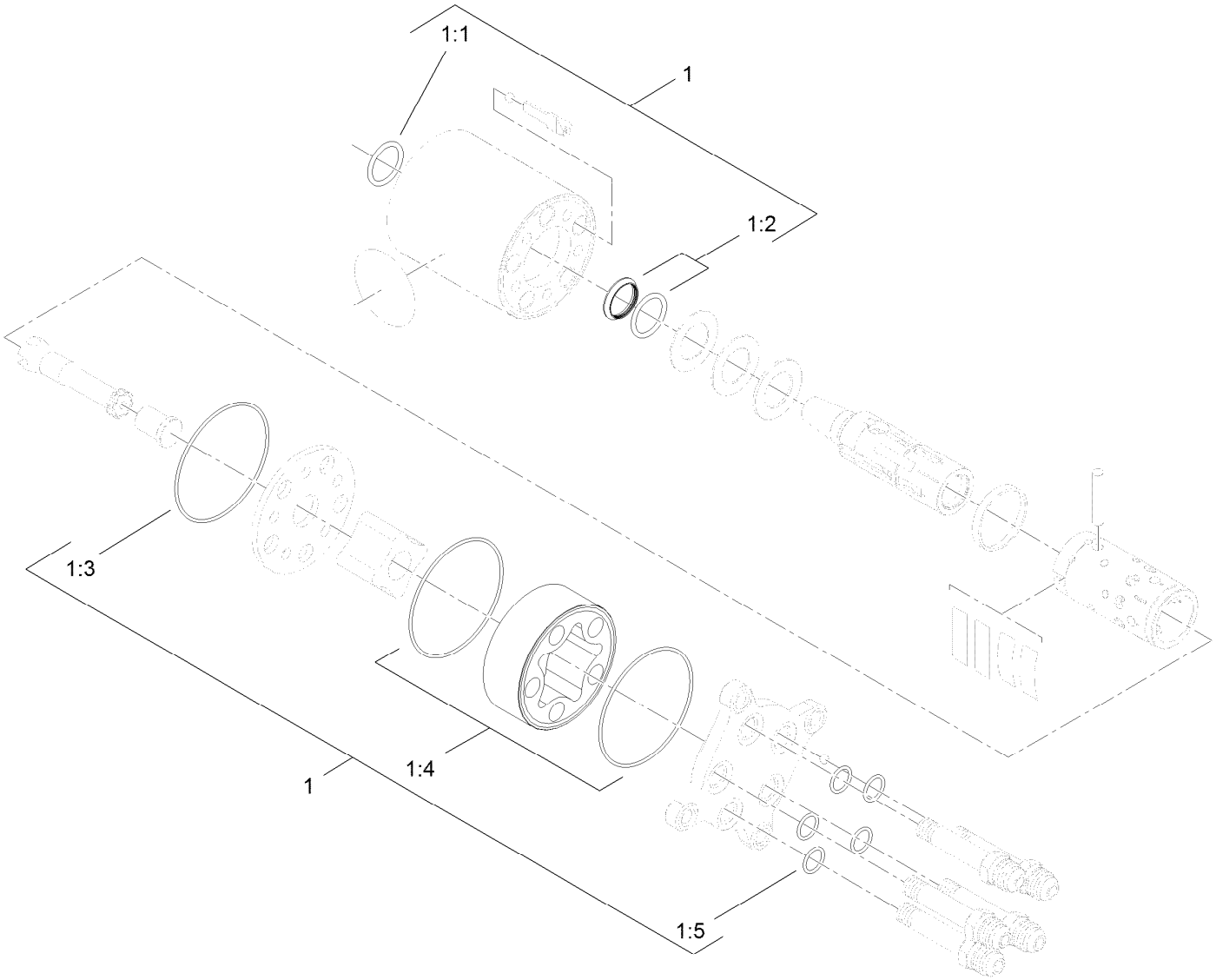

Steering Valve Assembly No. 120-4813

Ref.	*Part Number*	*Qty.*	*Description*
1	106-6716	1	Seal Kit
1:1		1	Ring-Seal, Dust ●
1:2		1	Seal-Shaft ●
1:3		1	O-Ring ●
1:4		2	O-Ring ●
1:5		5	O-Ring ●

● Not serviced separately

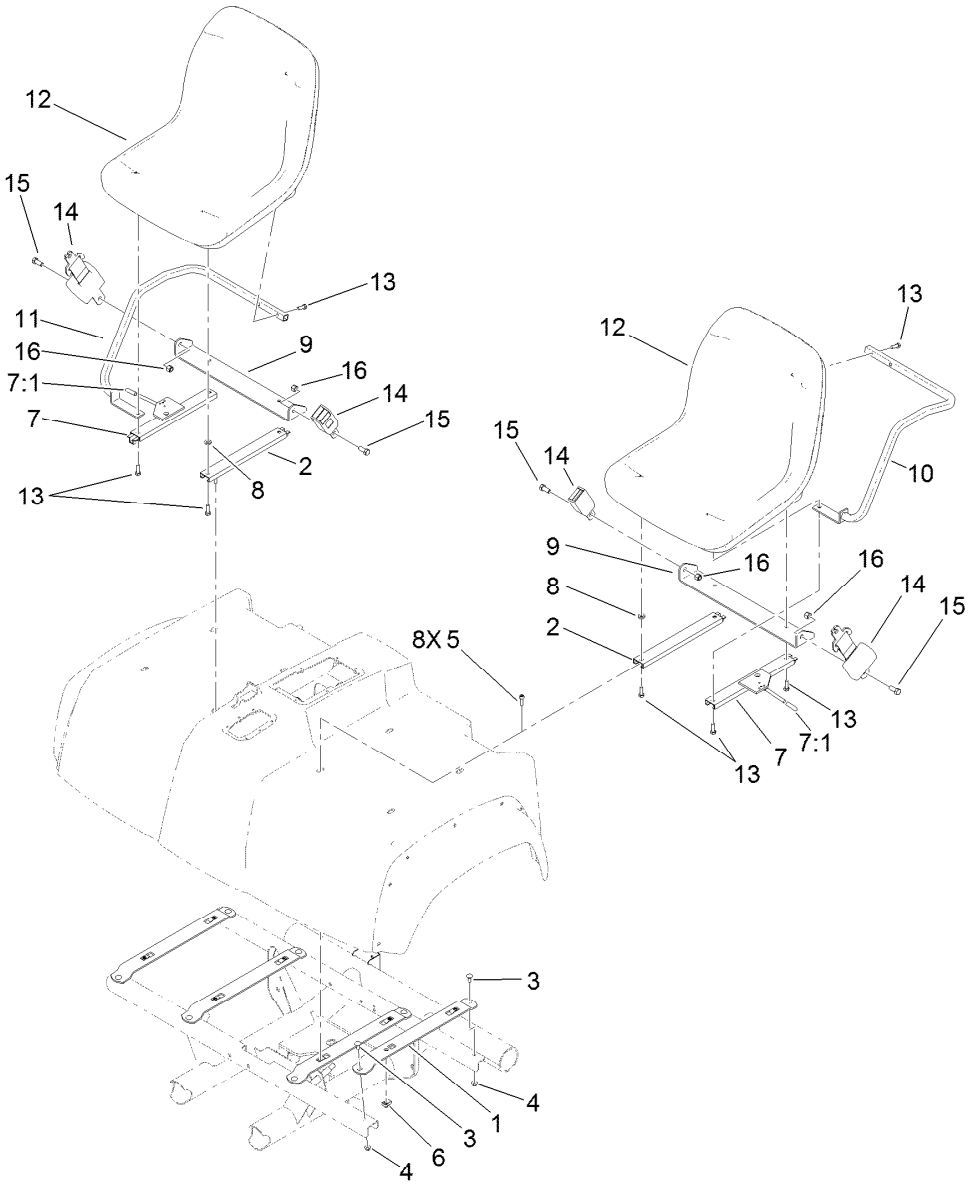

Seat Assembly

Ref.	Part Number	Qty.	Description
1	115-2435-03	4	Bracket-Seat
2	119-0655	2	Adjuster-Seat, Non Locking
3	3230-1	8	Bolt-CARR
4	104-8300	8	Nut-HF, NI
5	3274-22	8	Screw-HSH
6	115-7721	8	Nut-Clip, U
7	121-9763	2	Adjuster-Seat, Locking
7:1	2410-49	1	Cap-Vinyl
8	104-7658	2	Spacer

Ref.	Part Number	Qty.	Description
9	119-0727-03	2	Bracket-Belt, Seat
10	119-0731-03	1	Armrest-LH
11	119-0732-03	1	Armrest-RH
12	112-2923	2	Seat ASM
13	33114-030	12	Screw-HH
14	110-0413	2	Seatbelt-Retractable
15	3212-4	4	Screw-HH
16	3296-7	4	Nut-Lock

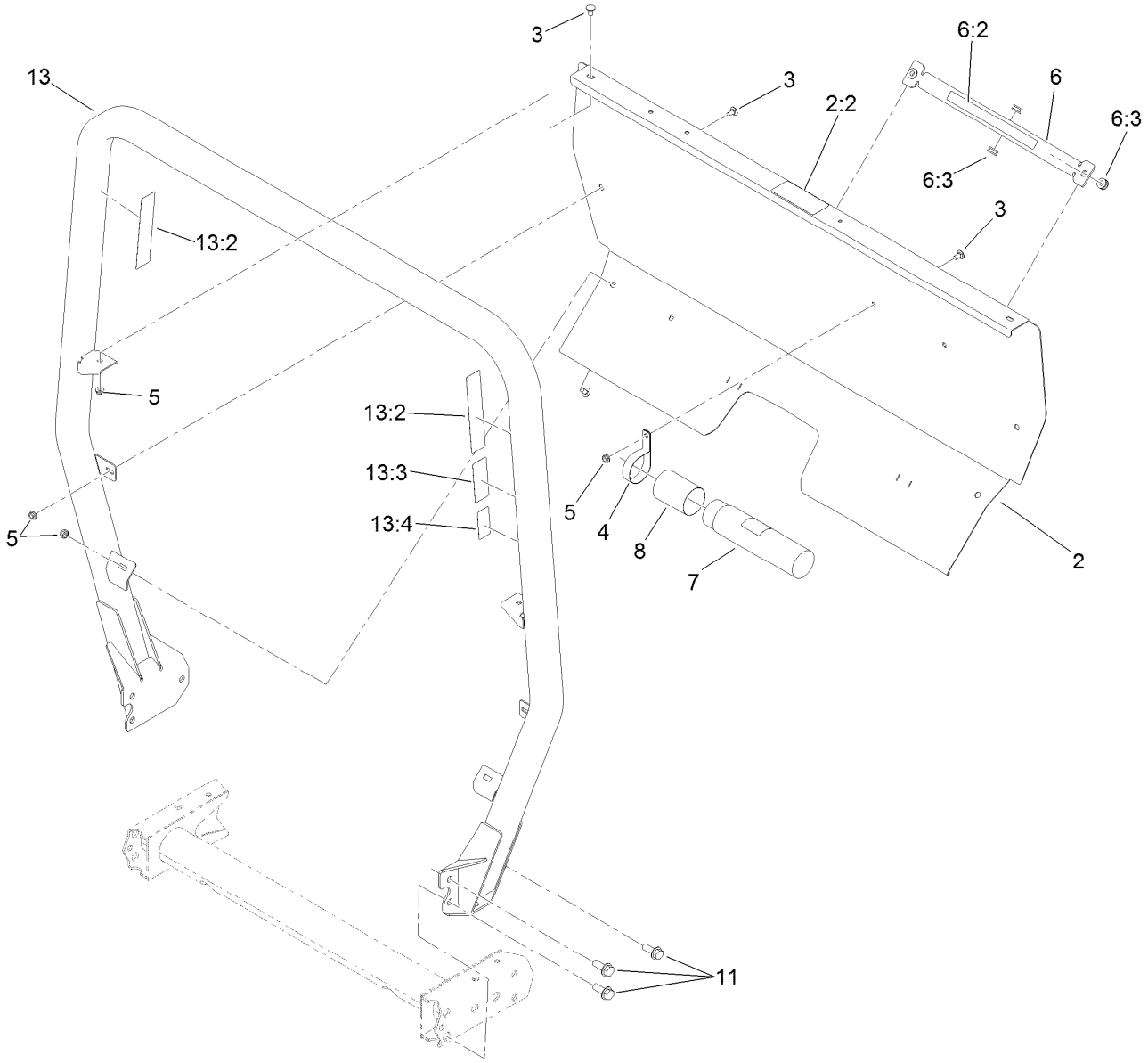

Roll-Over Protection System Assembly

Ref.	Part Number	Qty.	Description
2	115-2213	1	ROPS Cover ASM
2:2	105-4215	1	Decal-Caution
3	3230-18	8	Screw-CARR
4	2412-133	2	Clamp-R
5	32128-20	8	Nut-HF
6	105-7960	1	Bed Support ASM
6:2	93-9852	1	Decal-Warning
6:3	92-5972	4	Grommet-Rubber
7	104-7050	1	Tube-Manual
8	104-7048	1	Cap-Housing
11	3234-38	6	Screw-HHF
13	115-7910	1	ROPS ASM
13:2	106-7767	2	Decal-ROPS
13:3	93-9850	1	Decal-ROPS, CE
13:4	117-4969	1	Decal-ROPS, ISO

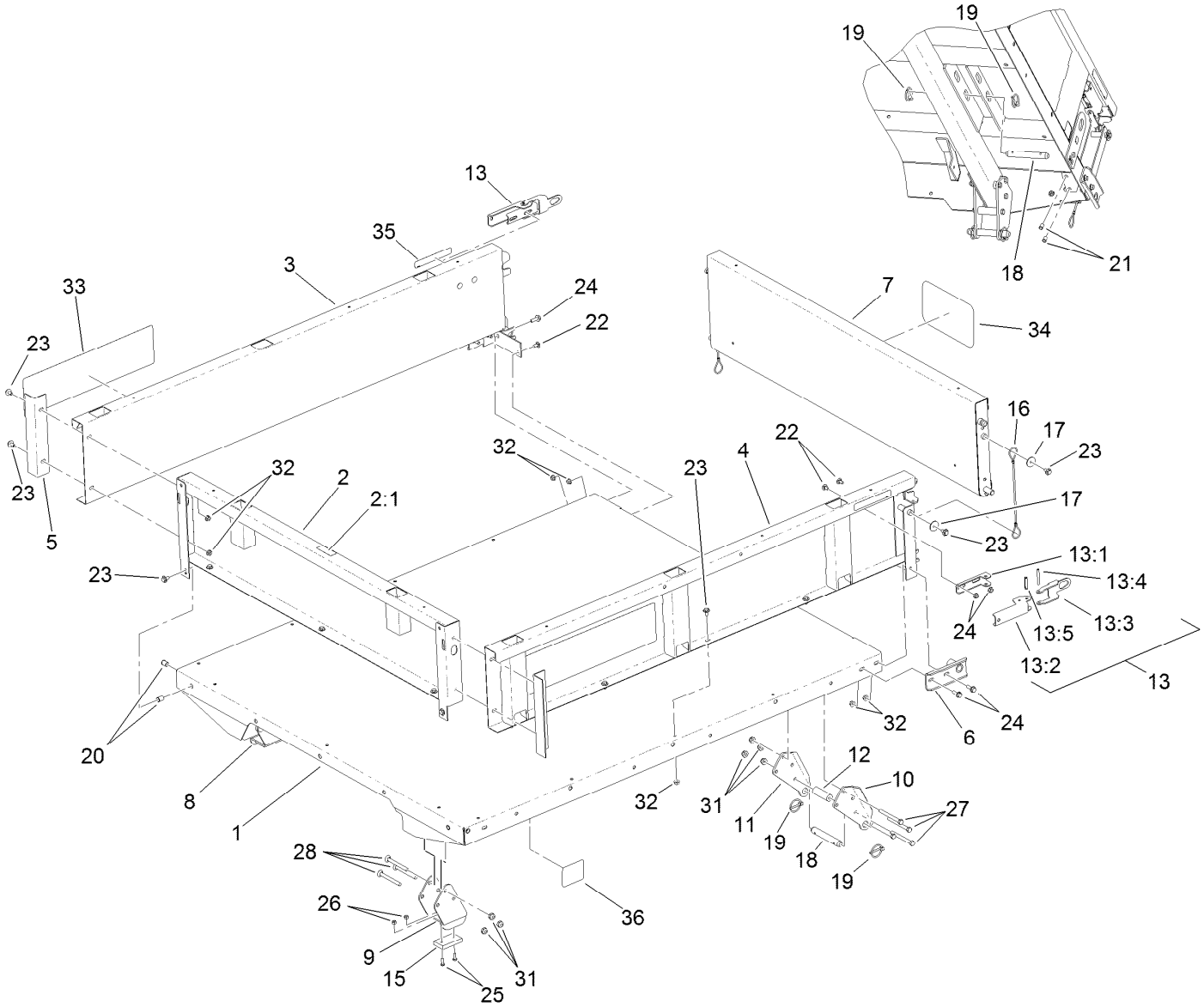

Full Bed and Side Panel Assembly

Ref.	Part Number	Qty.	Description
1	93-9724-03	1	Flatbed-Full
2	92-5982	1	Front Panel ASM
2:1	115-7739	1	Decal-No Riders
3	92-1255-03	1	Panel-Side, RH
4	92-1248-03	1	Panel-Side, LH
5	92-1320-03	2	Angle-Side
6	92-1265-03	2	Bracket-Pivot
7	92-1259-03	1	Tailgate-Rear
8	106-2423-03	1	Bracket-Spacer, RH
9	106-2422-03	1	Bracket-Spacer, LH
10	93-9720-03	2	Bracket-Pivot, Long (LH)
11	93-9721-03	2	Bracket-Pivot, Long (RH)
12	93-9575	2	Tube-Pivot, Flatbed
13	99-1123	2	Latch ASM
13:1	92-1271	1	Pivot-Latch
13:2	99-1113	1	Handle-Latch
13:3	99-1112	1	Plate-Retainer
13:4	32121-78	1	Pin-Roll
13:5	32121-25	1	Pin-Roll
15	93-9719	2	Block-Wear

Ref.	Part Number	Qty.	Description
16	93-9595	2	Lanyard
17	3256-57	4	Washer-Flat
18	92-1233	4	Pin-Clevis
19	92-1298	8	Pin-Lynch
20	32148-7	4	Nut-Insert
21	32148-6	4	Insert-Nut
22	3230-18	6	Screw-CARR
23	3234-7	21	Screw-HHF
24	3234-29	6	Screw-HHF
25	3250-45	4	Screw-SPH
26	3296-42	4	Nut-Lock, NI
27	323-42	8	Screw-HH
28	3231-24	6	Screw-CARR
31	3296-44	14	Nut-Lock, NI
32	32128-20	27	Nut-HF
33	115-7913	2	Decal
34	105-4222	1	Decal
35	93-9868	2	Decal-Caution
36	93-9899	2	Decal-Warning

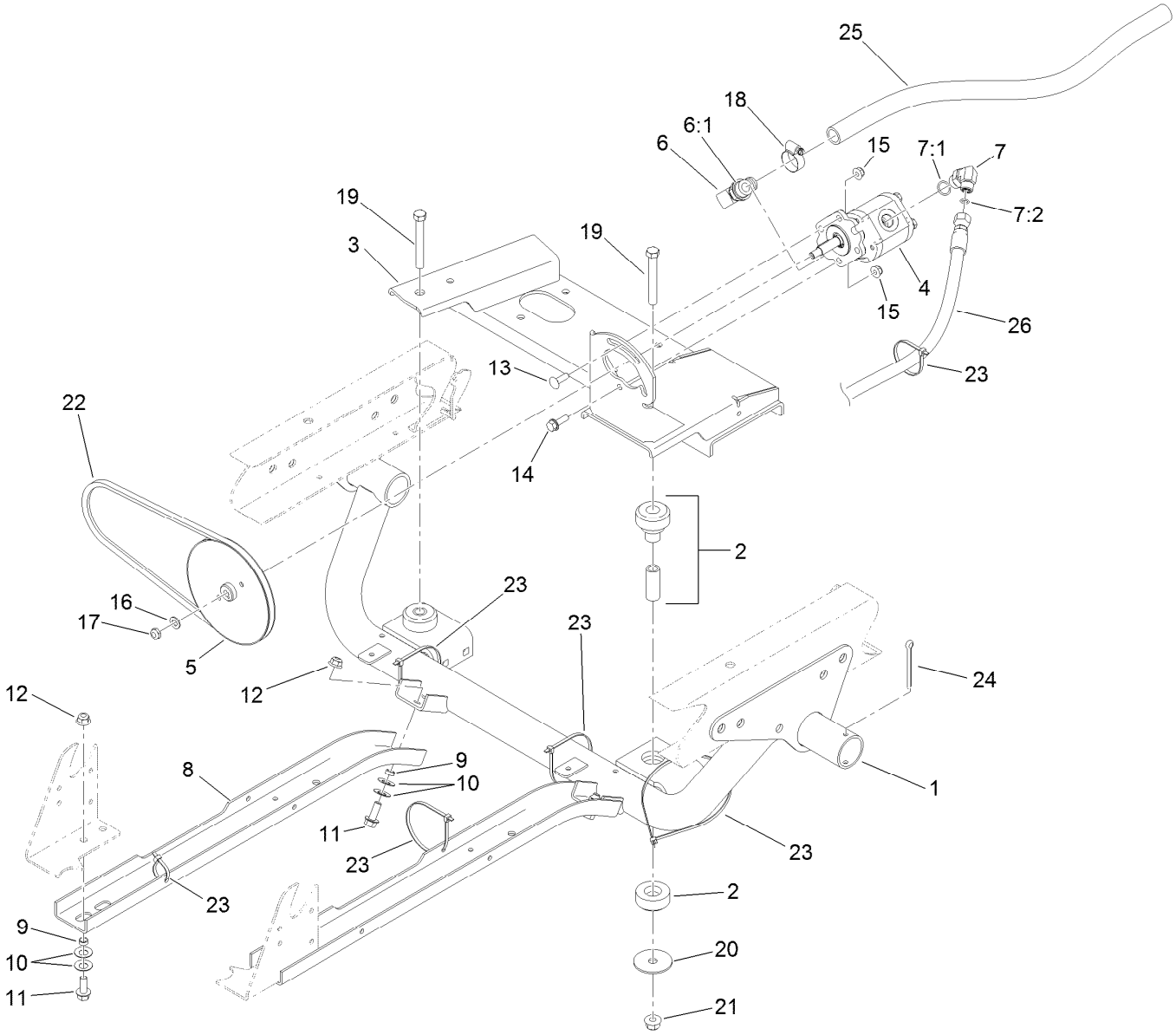

Engine Sub Frame Assembly

Ref.	Part Number	Qty.	Description
1	115-2257-03	1	Engine Support ASM
2	106-7865	2	Mount-Engine
3	115-2352-03	1	Engine Mount ASM
4	112-2983	1	Pump-Gear, Hydraulic
5	87-7740	1	Pulley
6	87-8170	1	Fitting
6:1	237-80	1	O-Ring
7	340-18	1	Fitting-HYD, 90 DEG
7:1	237-79	1	O-Ring
7:2	237-22	1	O-Ring
8	87-4730-03	2	Guard-Belly
9	76-9100	6	Spacer
10	3290-413	12	Washer-Belleville
11	3234-11	6	Screw-HHF
12	104-8301	6	Nut-HF, NI

Ref.	Part Number	Qty.	Description
13	3230-22	1	Screw-CARR
14	3234-29	1	Screw-HHF
15	104-8300	2	Nut-HF, NI
16	3256-45	1	Washer-Flat
17	3296-5	1	Nut-Hex
18	2412-129	1	Clamp-Hose
19	324-13	2	Screw-HH
20	87-5100	2	Washer-Snubbing
21	114-8417	2	Nut-HF, NI
22	87-8370	1	V-Belt
23	3290-379	6	Tie-Cable
24	3272-37	2	Pin-Cotter
25	87-8030	1	Hose-Suction
26	121-6283	1	Hose ASM

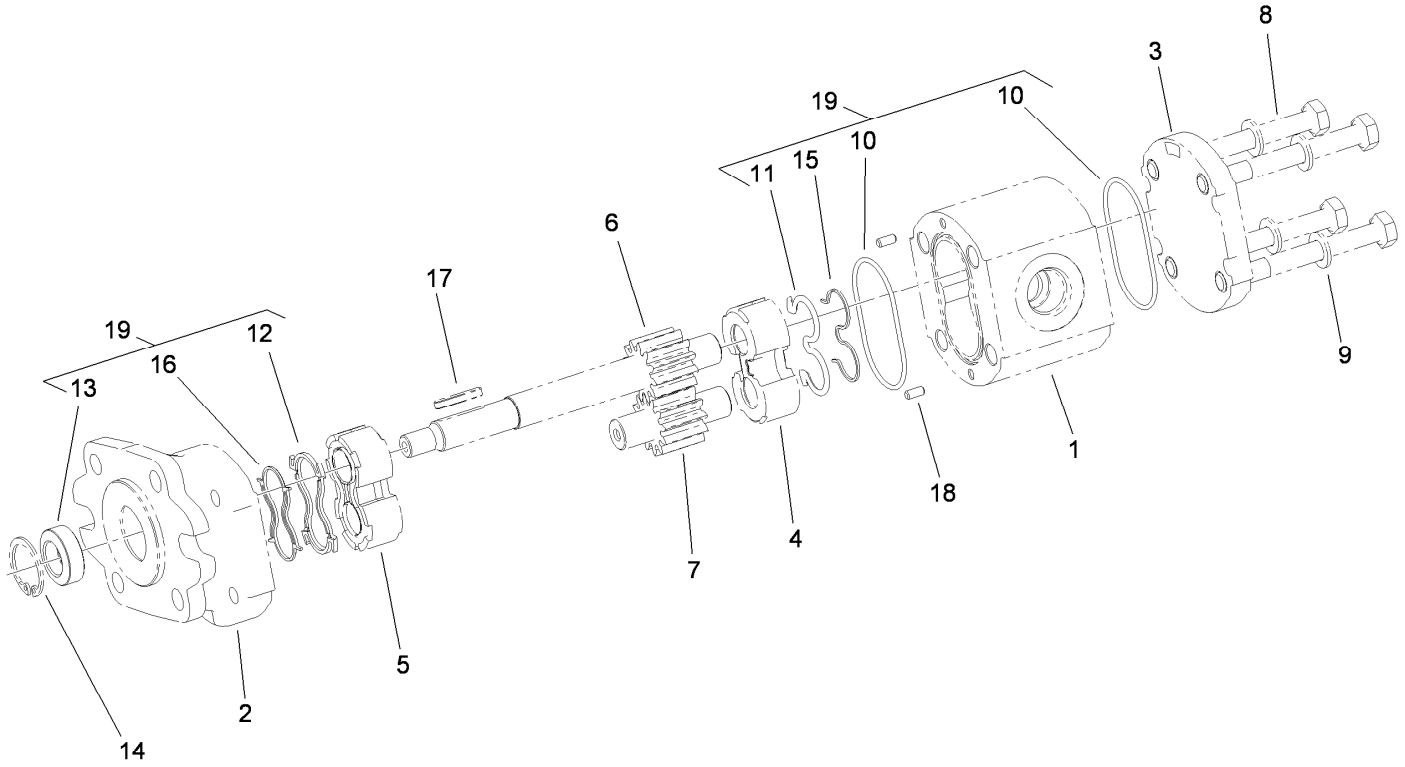

Hydraulic Gear Pump Assembly No. 112-2983

Ref.	Part Number	Qty.	Description
1		1	Body ●
2		1	Cover-Front ●
3		1	Cover-Rear ●
4		1	Plate-Thrust ●
5		1	Plate-Thrust, Upper ●
6		1	Shaft-Drive ●
7		1	Gear-Driven ●
8		4	Screw-HH ●
9		4	Washer ●
10		2	O-Ring Seal ●

Ref.	Part Number	Qty.	Description
11		1	Seal ●
12		1	Seal-Upper ●
13		1	Seal-Shaft ●
14		1	Ring-Clip ●
15		1	Seal-Extrusion, Anti ●
16		1	Seal-Extrusion, Anti ●
17	115-7856	1	Key-Square
18		1	Pin-Dowel ●
19	112-0199	1	Seal Kit

● Not serviced separately

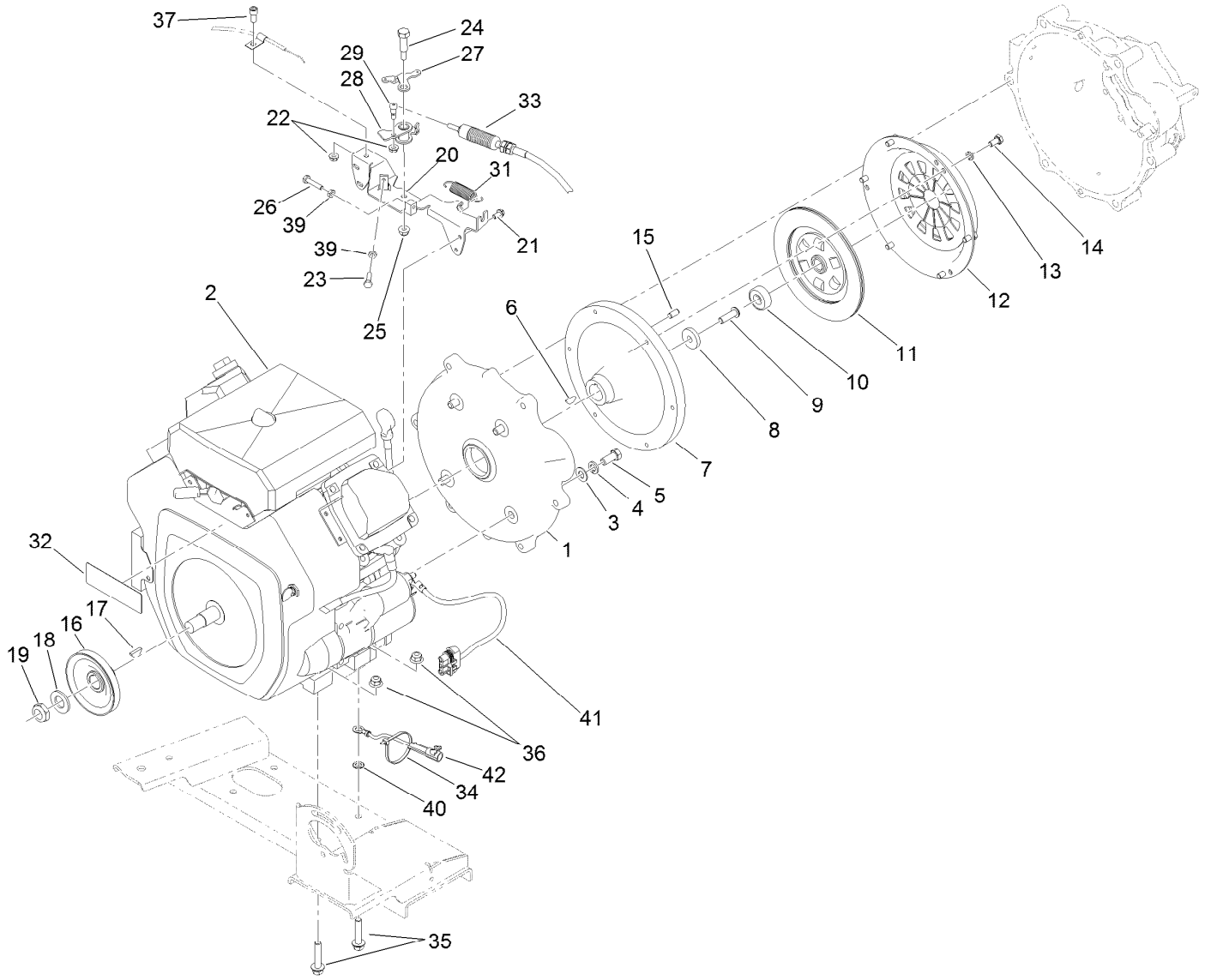

Engine Assembly

Ref.	Part Number	Qty.	Description
1	107-7991	1	Adapter-Clutch
2	115-7819	1	Engine-Kohler, Ch680-3025
2:1	108-3847	1	Filter-Oil ●
3	3256-25	4	Washer-Flat
4	3253-6	4	Washer-Lock
5	324-4	4	Screw-HH
6	3257-5	1	Key-Woodruff
7	120-4893	1	Flywheel
8	87-6080	1	Washer
9	3274-63	1	Screw-HSBH
10	87-6460	1	Bearing-Ball (W/Seal)
11	87-4700	1	Disc-Clutch
12	87-4690	1	Cover-Clutch
13	3253-4	6	Washer-Lock
14	33114-016	6	Screw-HH
15	42-7160	3	Pin
16	87-7710	1	Pulley ASM
17	3257-7	1	Key-Woodruff

Ref.	Part Number	Qty.	Description
18	3256-28	1	Washer-Flat
19	3296-15	1	Nut-Lock, NI
20	121-9659-03	1	Bracket-Throttle
21	32144-4	4	Screw-HWH
22	32128-33	2	Nut-HF
23	329-6	1	Screw-HH
24	7-0030	1	Screw-Shoulder, HH
25	104-8300	1	Nut-HF, NI
26	329-7	1	Screw-HH
27	87-7790	1	Lever-Choke
28	87-7800	1	Lever-Throttle
29	119-4881	1	Bolt-Shoulder
31	67-1450	1	Spring-Idler
32	80-8040	1	Decal-Warning
33	120-4980	1	Cable-Throttle
34	3290-379	1	Tie-Cable
35	3234-19	4	Screw-HHF
36	104-8301	4	Nut-HF, NI

● Not illustrated

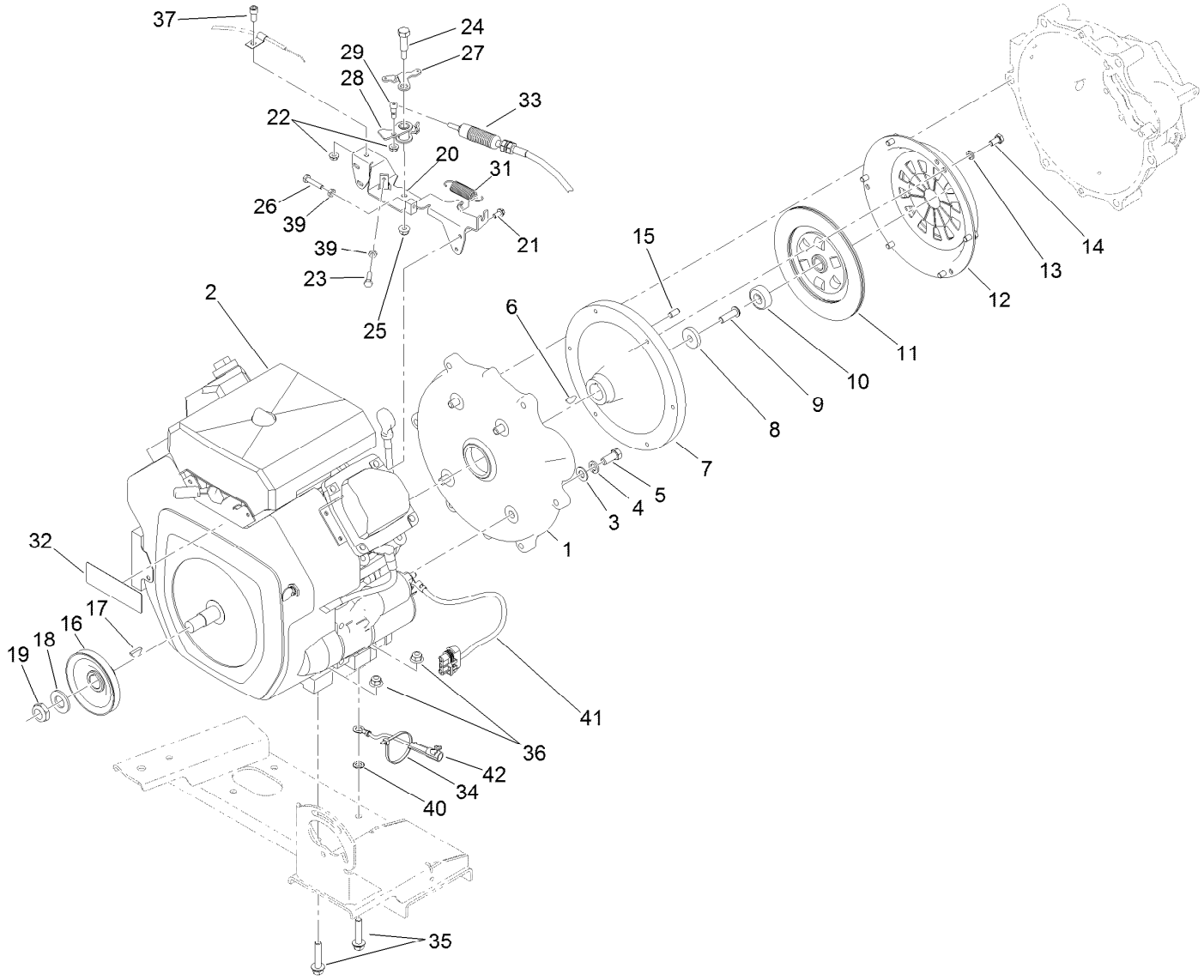

Engine Assembly (continued)

Ref.	Part Number	Qty.	Description
37	3274-12	1	Screw-HSH
39	3220-1	2	Nut-Jam
40	3255-9	1	Washer-Lock

Ref.	Part Number	Qty.	Description
41	99-3441	1	Harness-Wire, Fusible Link
42	117-5612	1	Harness-Wire, Ground

● Not illustrated

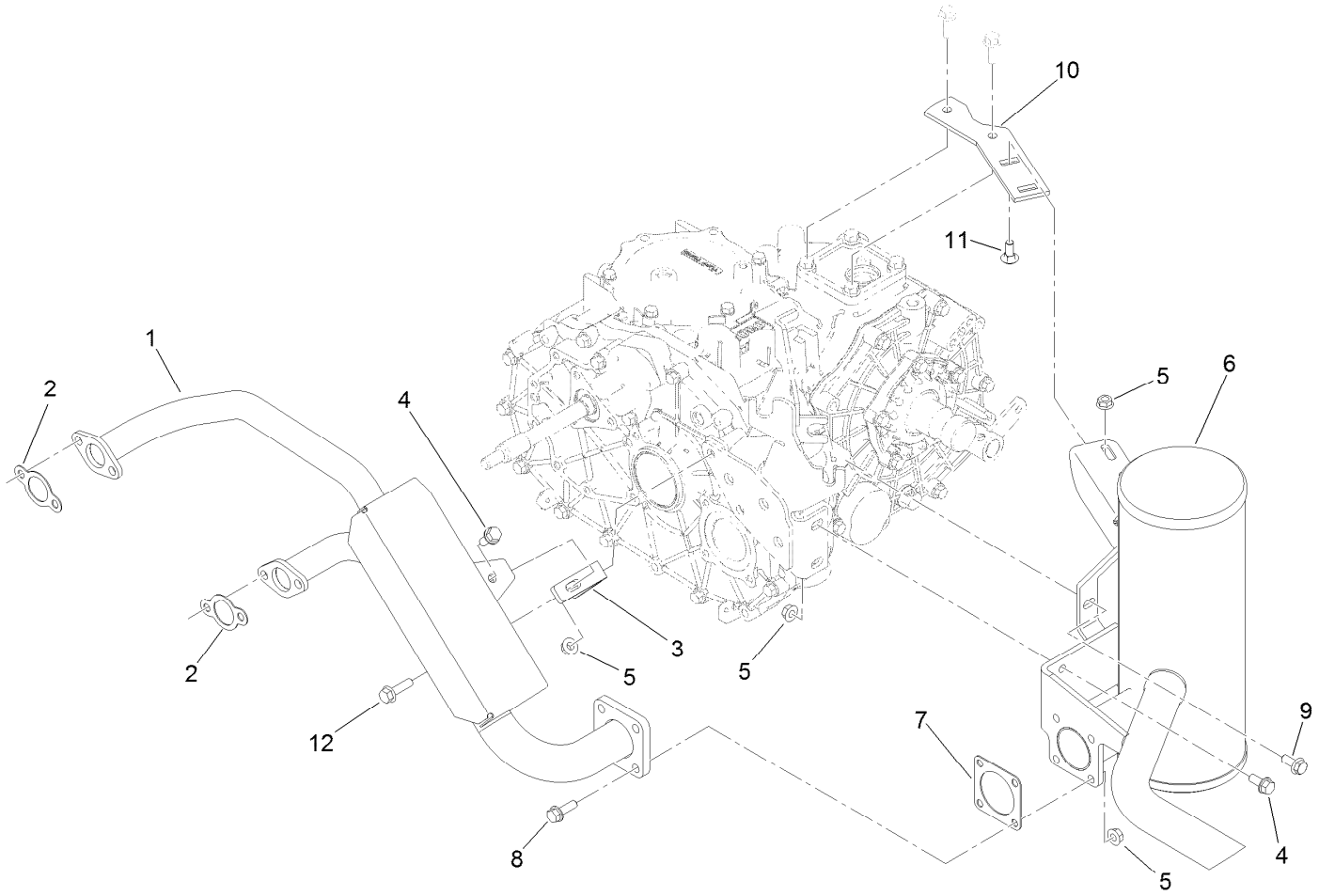

Muffler Assembly

Ref.	*Part Number*	*Qty.*	*Description*
1	106-7855	1	Manifold-Cooled, Air
2	110-6697	2	Gasket-Exhaust
3	106-7880-03	1	Mount-Angle
4	3234-5	3	Screw-HHF
5	32128-20	9	Nut-HF
6	115-7725	1	Muffler
7	105-4209	1	Gasket-Muffler
8	3234-17	4	Screw-HHF
9	98-7977	1	Screw-HHF
10	105-9472	1	Plate-Mount, Muffler
11	3230-1	2	Bolt-CARR
12	33104-030	1	Screw-HHF

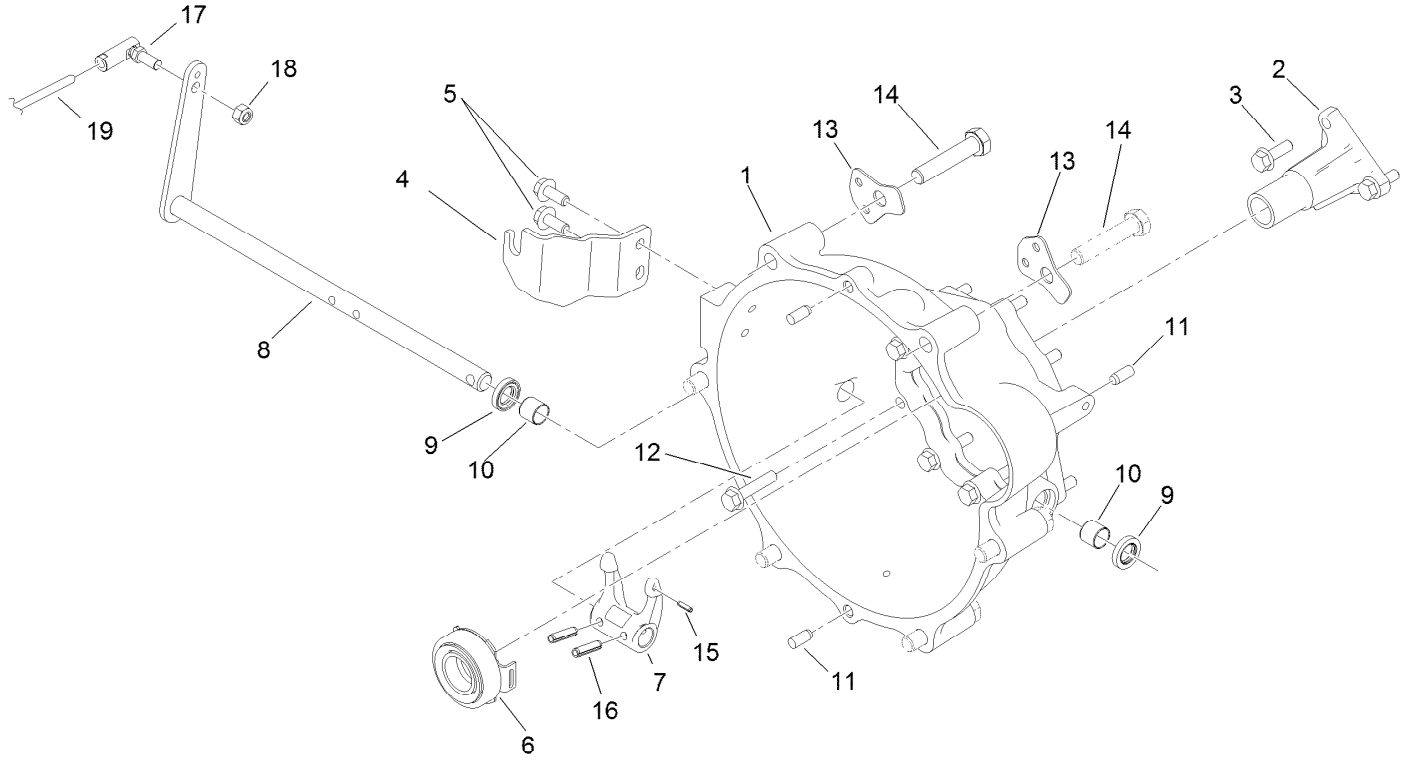

Clutch Linkage Assembly

Ref.	Part Number	Qty.	Description
1	104-9249	1	Housing-Bell
2	120-4886	1	Guide-Release
3	33104-025	3	Screw-HHF
4	115-2313	1	Bracket-Cable, Clutch
5	98-7977	2	Screw-HHF
6	110-2538	1	Bearing-Release, Clutch
7	87-5300	1	Fork-Clutch
8	115-2311	1	Lever-Clutch
9	87-1920	2	Seal-Oil
10	87-3770	2	Bushing-Housing, Bell
11	87-1910	4	Pin-Dowel
12	33104-040	9	Screw-HHF
13	115-2247	2	Bracket-Harness
14	107-7983	6	Screw-HH
15	32121-7	1	Pin-Roll, Slotted
16	32121-24	2	Pin-Spring
17	2411-33	1	Balljoint-RH (W/Grommet)
18	3296-4	1	Nut-Lock
19	115-2284	1	Cable-Clutch

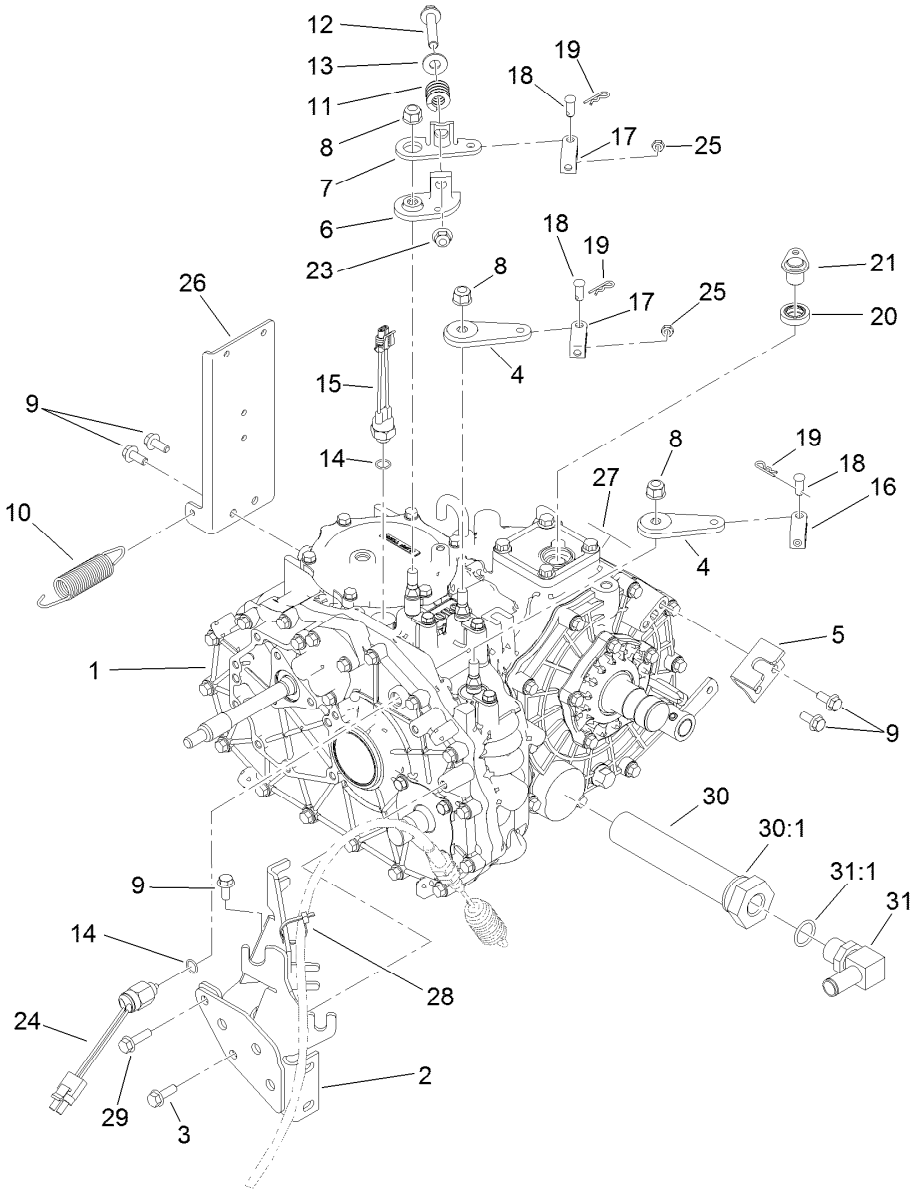

Transaxle Assembly

Ref.	Part Number	Qty.	Description
1	115-7783	1	2 Wheel Drive Transaxle ASM
2	105-4207-03	1	Mount-Cable
3	33104-025	1	Screw-HHF
4	87-7960	2	Lever-Shift
5	87-4470	1	Bracket-Lock, Differential
6	87-7970	1	Arm-Shift
7	87-8250	1	Plate-Arm, Shift
8	103-9511	3	Nut-Lock, NI
9	98-7977	5	Screw-HHF
10	68-9950	1	Spring-Traction
11	87-6910	1	Spring-Compression
12	66-9302	1	Screw-HHF, Whiz
13	3256-4	1	Washer-Flat
14	237-30	2	O-Ring
15	72-4310	1	Switch-Ball
16	87-7160	1	Clevis-Cable

Ref.	Part Number	Qty.	Description
17	87-2310	2	Clevis-Cable
18	283-62	3	Pin-Clevis
19	3290-307	3	Pin-Cotter
20	92-3735	1	Seal-Oil, Sensor
21	115-7774	1	Plug ASM
23	3290-357	1	Nut-HHF, Whiz
24	87-6710	1	Switch-Transmission
25	3220-1	2	Nut-Jam
26	115-2240-03	1	Bracket-Fuel
27	115-7741	1	Decal-Oil, Transmission
28	3290-379	1	Tie-Cable
29	33104-030	1	Screw-HHF
30	87-3990	1	Strainer-Transaxle
30:1	237-123	1	O-Ring
31	353-987	1	Fitting-HYD, 90 DEG (Barbed)
31:1	237-81	1	O-Ring

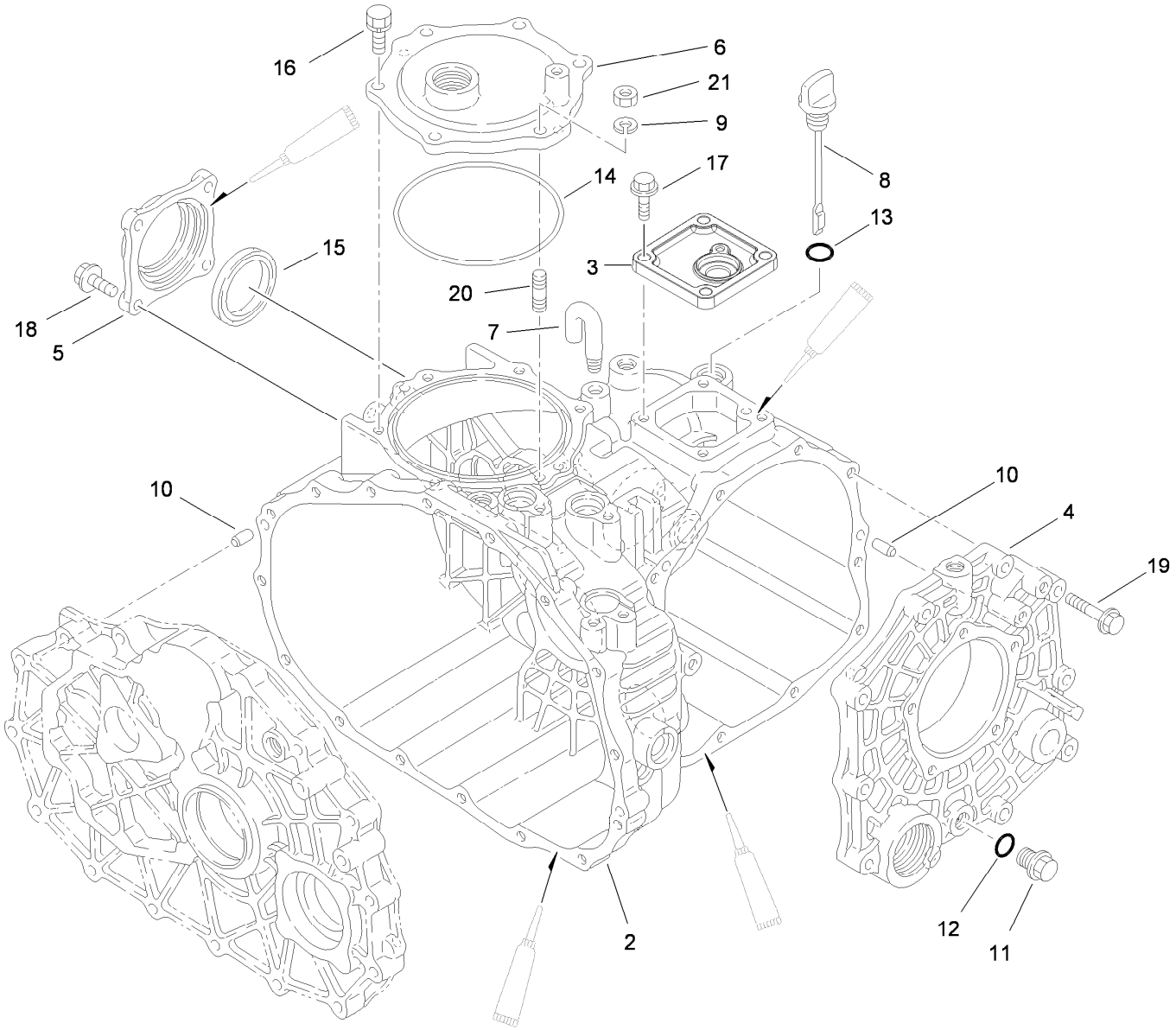

Case Assembly
Transaxle Assembly No. 115-7783

Ref.	Part Number	Qty.	Description
2	92-0651	1	Case-Transmission
3	92-0810	1	Cover-Upper, Sensor
4	92-0653	1	Cover-Side
5	92-0655	1	Cover-Seal, Axle
6	92-0656	1	Cover-Upper, PTO
7	92-0743	1	Breather-Air
8	92-0662	1	Cap-Oil
9	92-0762	1	Washer-Spring
10	92-0765	4	Pin-Parallel
11	92-0773	1	Plug-Drain

Ref.	Part Number	Qty.	Description
12	92-0787	1	O-Ring
13	92-0788	1	O-Ring
14	92-0790	1	O-Ring
15	92-0793	1	Seal-Oil
16	92-0796	5	Bolt
17	33104-025	4	Screw-HHF
18	33104-025	4	Screw-HHF
19	33104-040	10	Screw-HHF
20	92-0805	1	Bolt 8X20
21	68-9400	1	Nut-Flange

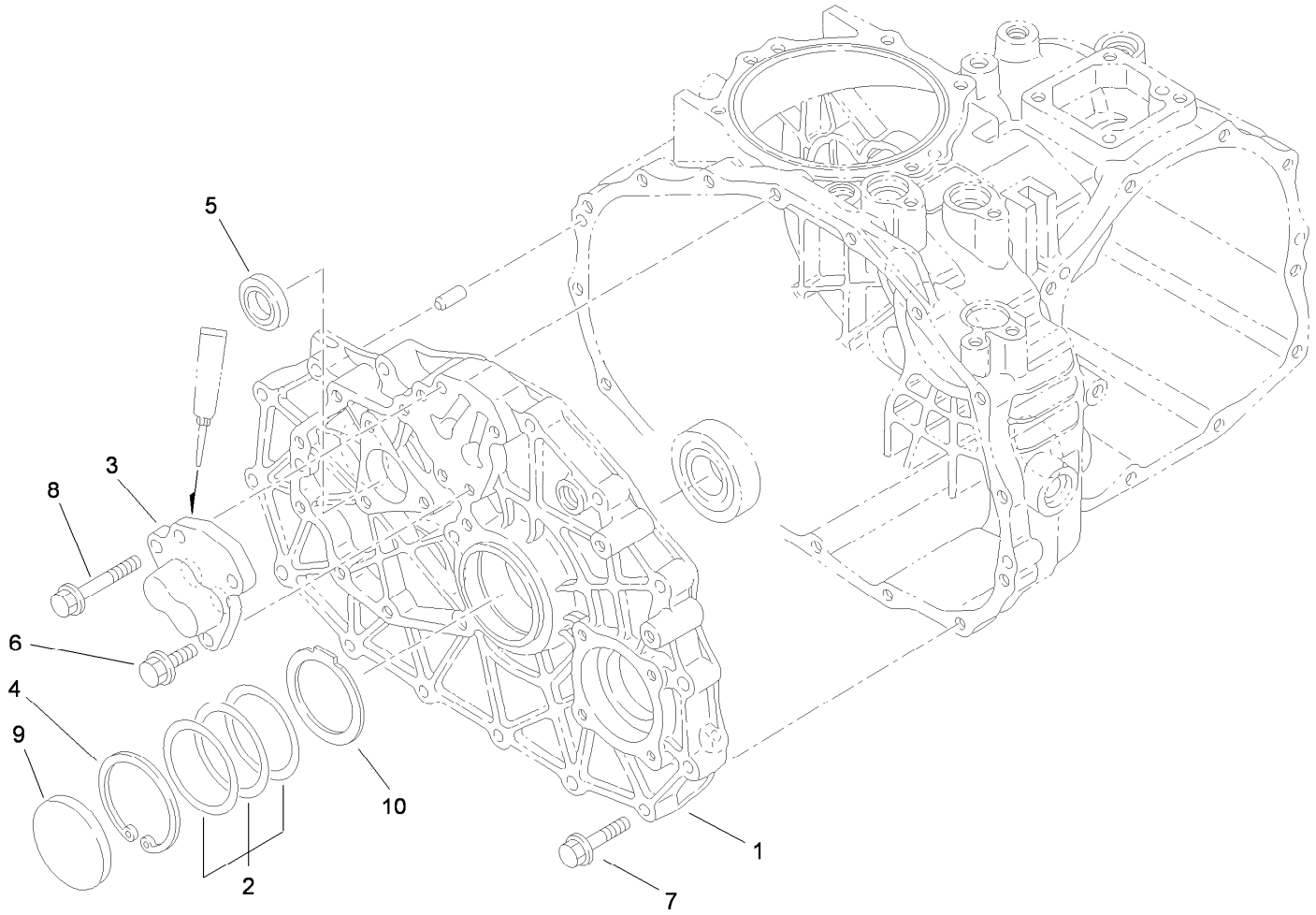

Center Plate Assembly
Transaxle Assembly No. 115-7783

Ref.	*Part Number*	*Qty.*	*Description*
1	100-4461	1	Plate-Center
2	100-4460	1	Shim-Set
3	92-0706	1	Shaft-Fork
4	92-0759	1	Ring-Snap
5	92-0791	1	Seal-Oil
6	33104-025	3	Screw-HHF
7	33104-040	15	Screw-HHF
8	33104-050	1	Screw-HHF
9	92-0807	1	Cap-Sealing
10	100-4465	1	Shim (W/Tab)

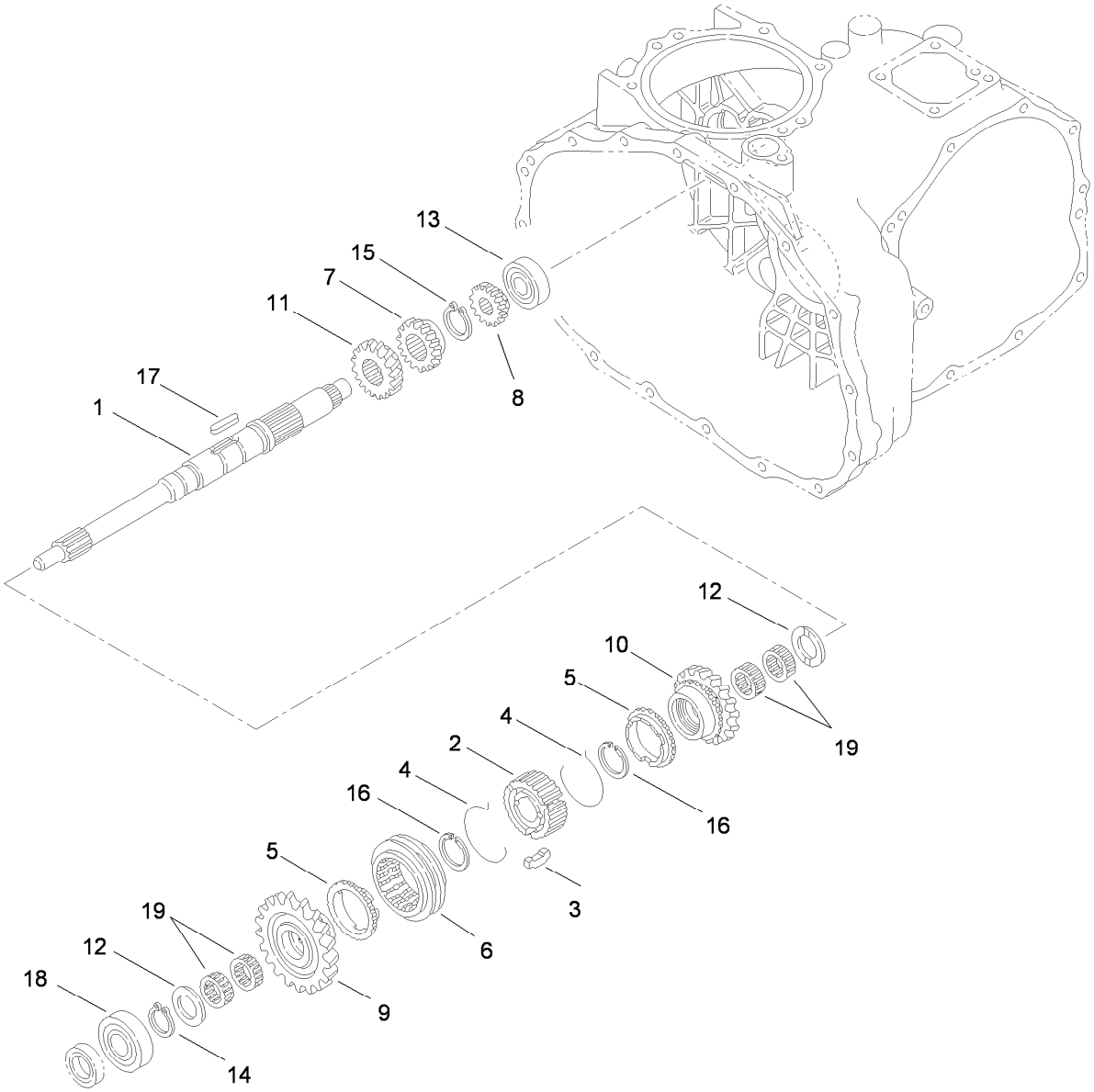

Main Shaft Assembly
Transaxle Assembly No. 115-7783

Ref.	Part Number	Qty.	Description
1	92-0663	1	Shaft-Main
2	92-0664	1	Hub-Synchro
3	92-0665	3	Key-Synchro
4	92-0666	2	Spring-Synchro
5	92-0667	2	Ring-Synchro
6	92-0668	1	Shifter-Synchro
7	92-0672	1	Gear-Main, 18 Tooth
8	92-0673	1	Gear-Main, 14 Tooth
9	110-2521	1	Gear-Main, 27 Tooth
10	110-2522	1	Gear- Main, 24 Tooth

Ref.	Part Number	Qty.	Description
11	92-0687	1	Gear-Main, 16 Tooth
12	92-0740	2	Washer-Thrust
13	92-0650	1	Bearing
14	92-0753	1	Ring-Snap
15	92-0754	1	Ring-Snap
16	92-0763	2	Ring-Snap
17	92-0772	1	Key
18	251-8	1	Bearing-Ball
19	92-0781	4	Bearing-Needle

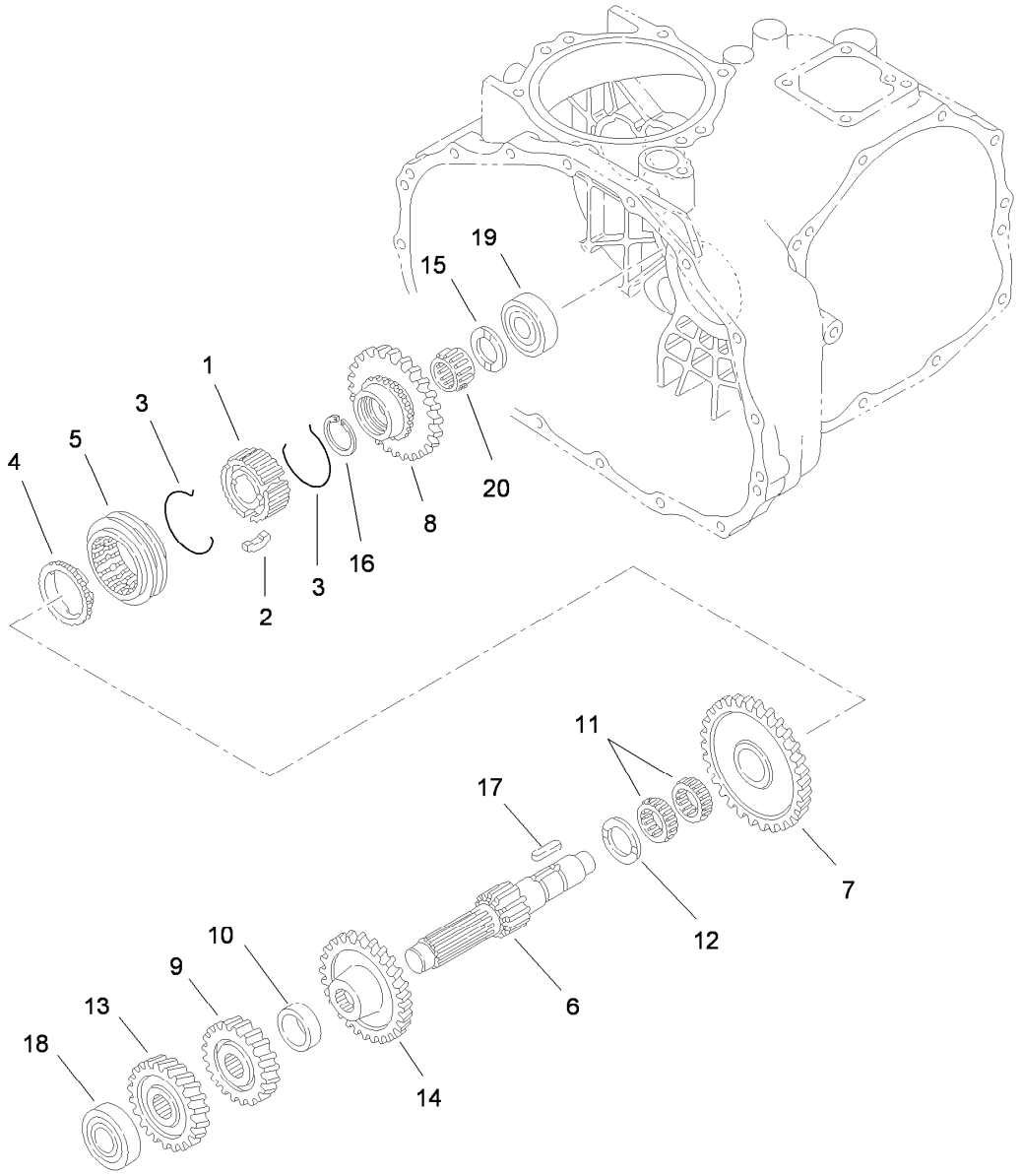

Reduction Shaft Assembly
Transaxle Assembly No. 115-7783

Ref.	Part Number	Qty.	Description
1	92-0664	1	Hub-Synchro
2	92-0665	3	Key-Synchro
3	92-0666	2	Spring-Synchro
4	92-0667	1	Ring-Synchro
5	92-0668	1	Shifter-Synchro
6	92-0674	1	Shaft-Reduction
7	110-2524	1	Gear- Reduction, 49 Tooth
8	92-0819	1	Gear-Reduction, 40 Tooth
9	92-0769	1	Pin-Roll
10	92-0680	1	Collar

Ref.	Part Number	Qty.	Description
11	92-0681	2	Bearing-Needle
12	92-0682	1	Washer-Thrust
13	92-0822	1	Gear-Reduction, 28 Tooth
14	92-0823	1	Gear-Reduction, 43 Tooth
15	92-0740	1	Washer-Thrust
16	92-0673	1	Gear-Main, 14 Tooth
17	92-0772	1	Key
18	105-7985	1	Bearing
19	92-0778	1	Bearing
20	92-0782	1	Bearing-Needle

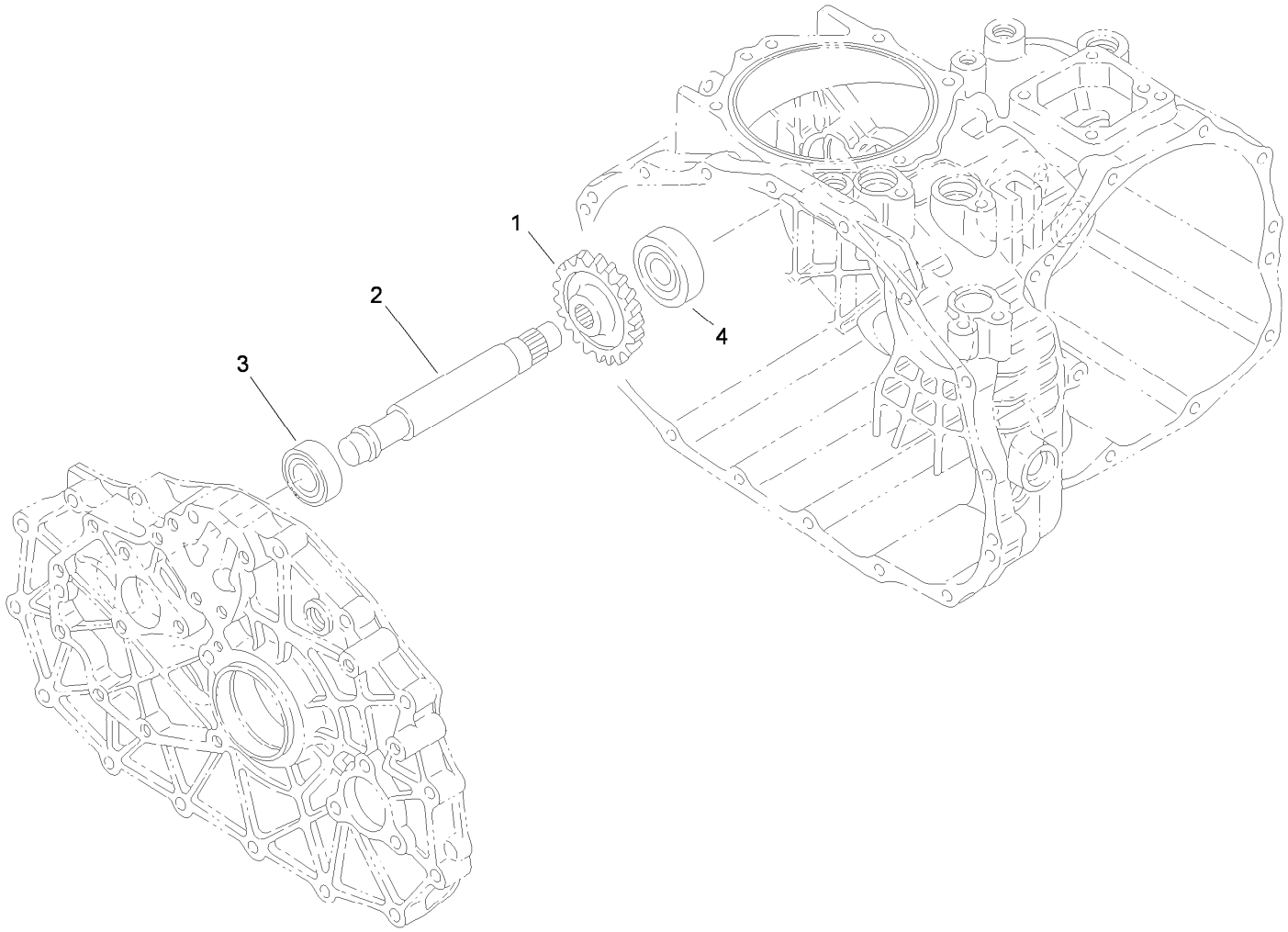

Reverse Shaft Assembly
Transaxle Assembly No. 115-7783

Ref.	*Part Number*	*Qty.*	*Description*
1	92-0684	1	Gear-Reverse, 33 Tooth
2	92-0824	1	Shaft-Idler, Reverse
3	251-346	1	Bearing-Ball
4	92-0778	1	Bearing

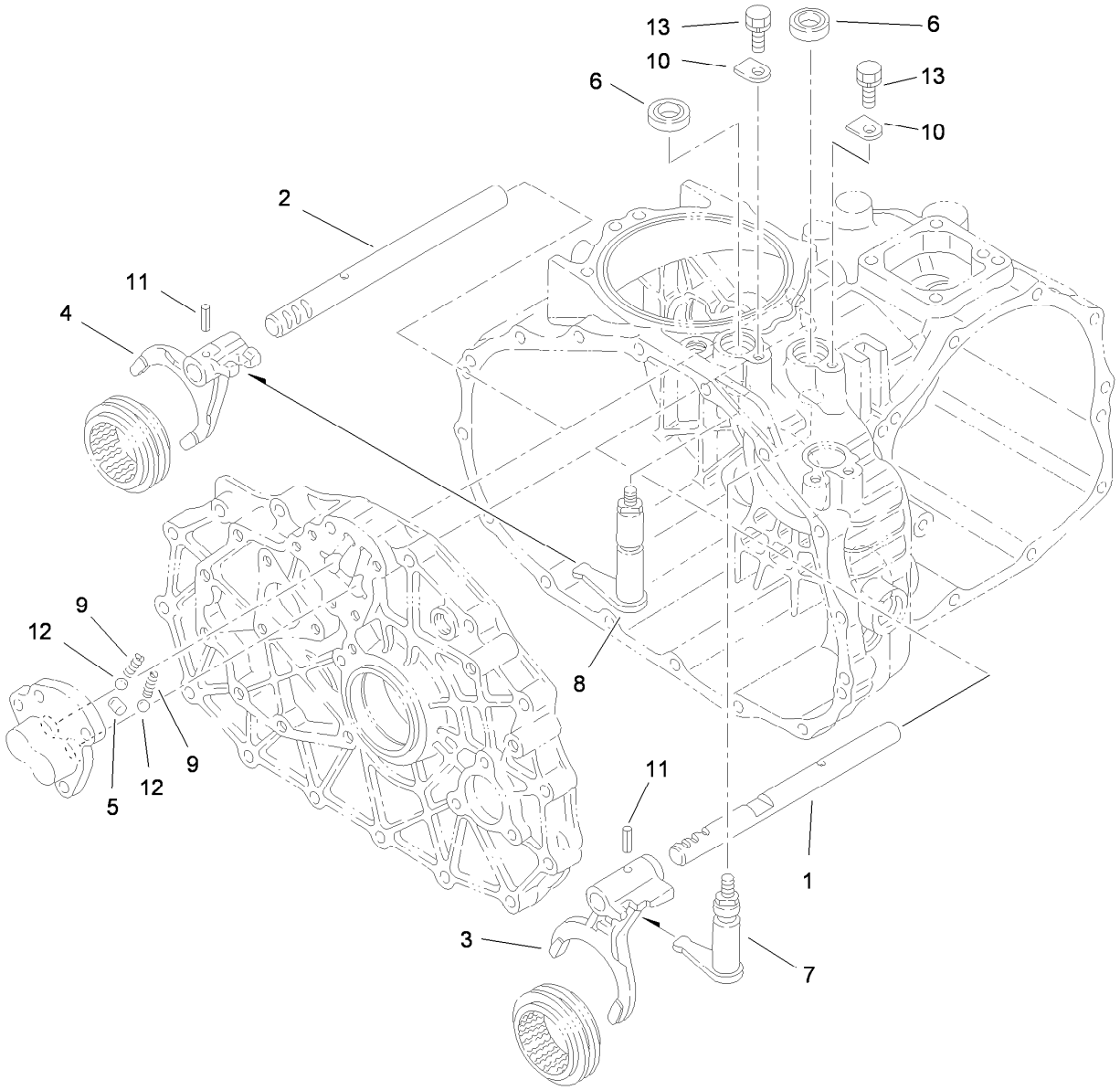

Main Shift Assembly
Transaxle Assembly No. 115-7783

Ref.	*Part Number*	*Qty.*	*Description*
1	92-0698	1	Shaft-Fork
2	92-0699	1	Shaft-Fork
3	92-0700	1	Fork-Shift
4	92-0701	1	Fork-Shift
5	92-0705	1	Lock-Spindle
6	92-0729	2	Seal-Oil
7	92-0816	1	Arm-Shift
8	92-0817	1	Arm-Shift
9	92-0731	2	Spring
10	92-0732	2	Plate-Keeper
11	92-0769	2	Pin-Roll
12	92-0785	2	Ball-Steel
13	33104-016	2	Screw-HHF

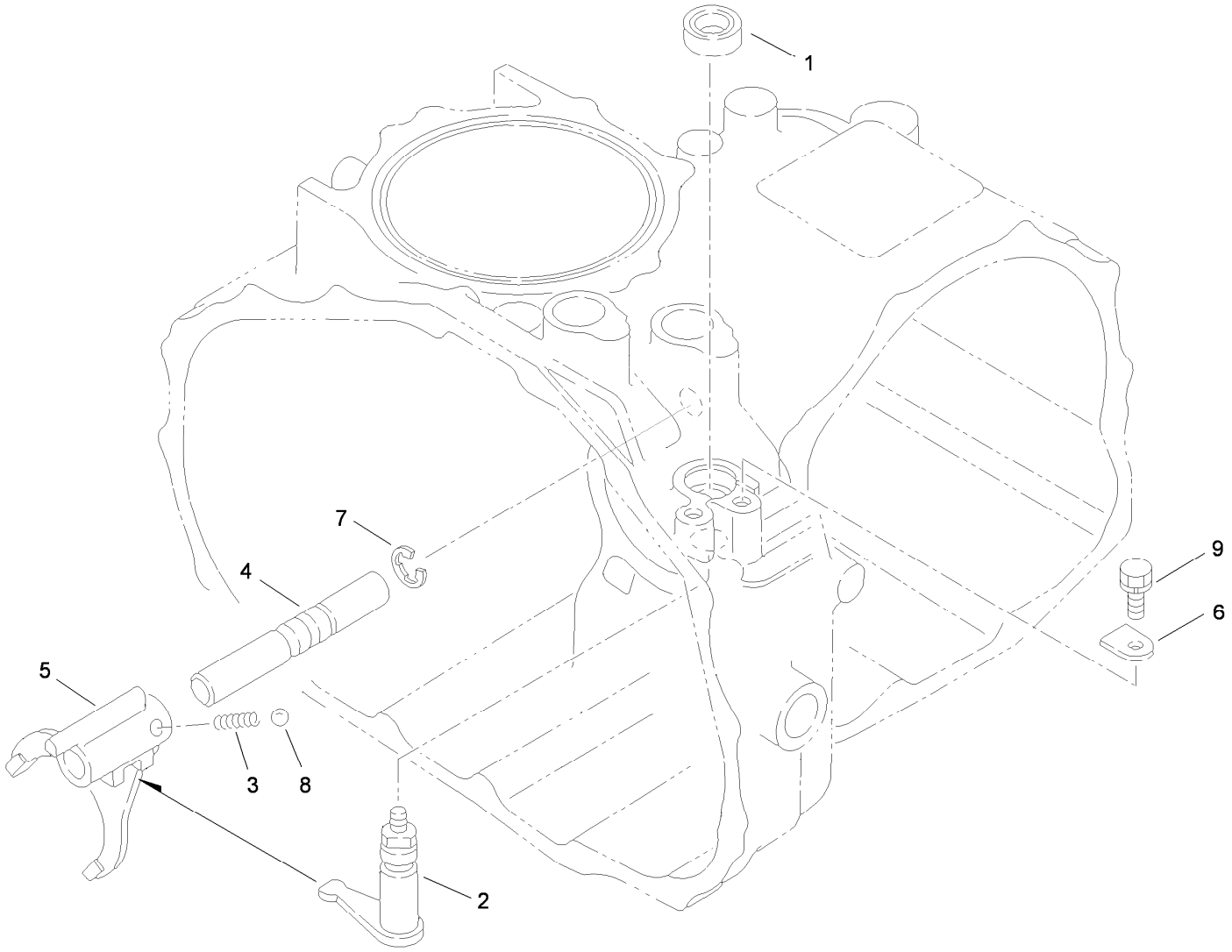

Hi-Lo Shift Assembly
Transaxle Assembly No. 115-7783

Ref.	*Part Number*	*Qty.*	*Description*
1	92-0729	1	Seal-Oil
2	92-0818	1	Arm-Shift
3	92-0731	1	Spring
4	92-0708	1	Shaft-Fork
5	92-0709	1	Fork-Shift
6	92-0732	1	Plate-Keeper
7	92-0761	1	Ring-E
8	92-0785	1	Ball-Steel
9	33104-016	1	Screw-HHF

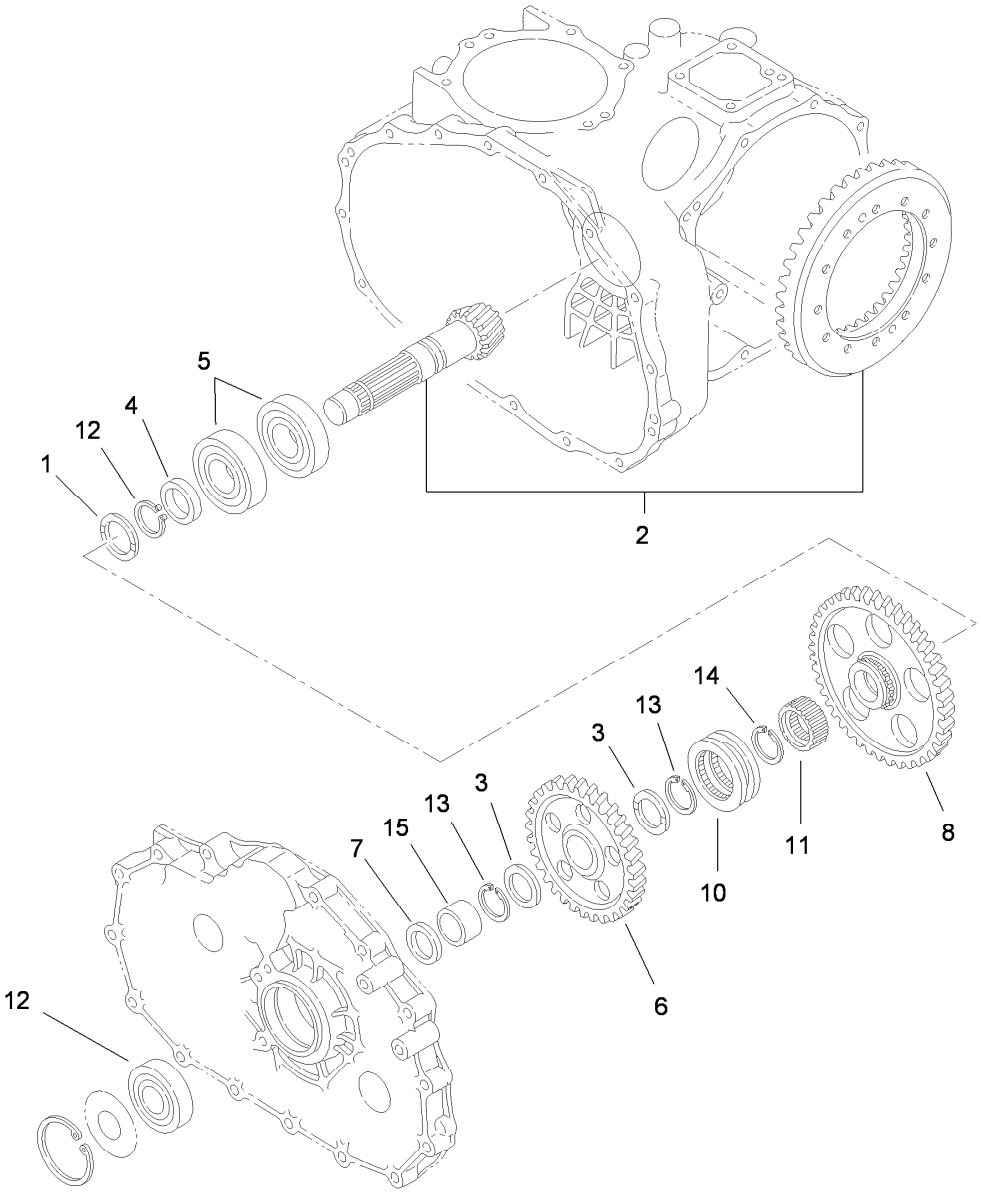

Countershaft Assembly
Transaxle Assembly No. 115-7783

Ref.	*Part Number*	*Qty.*	*Description*
1	92-0741	1	Washer-Thrust
2	105-7983	1	Countershaft And Ring Gear ASM
3	92-0711	2	Washer-Thrust
4	92-0713	1	Collar
5	92-0714	2	Bearing
6	92-0715	1	Gear-Countershaft
7	92-0716	1	Collar
8	92-0717	1	Gear-Countershaft
10	92-0718	1	Shifter
11	105-7986	1	Collar-Spline
12	92-0712	1	Bearing-Ball
13	105-7987	2	Ring-Snap
14	92-0755	1	Ring-Snap
15	92-0783	1	Race-Inner

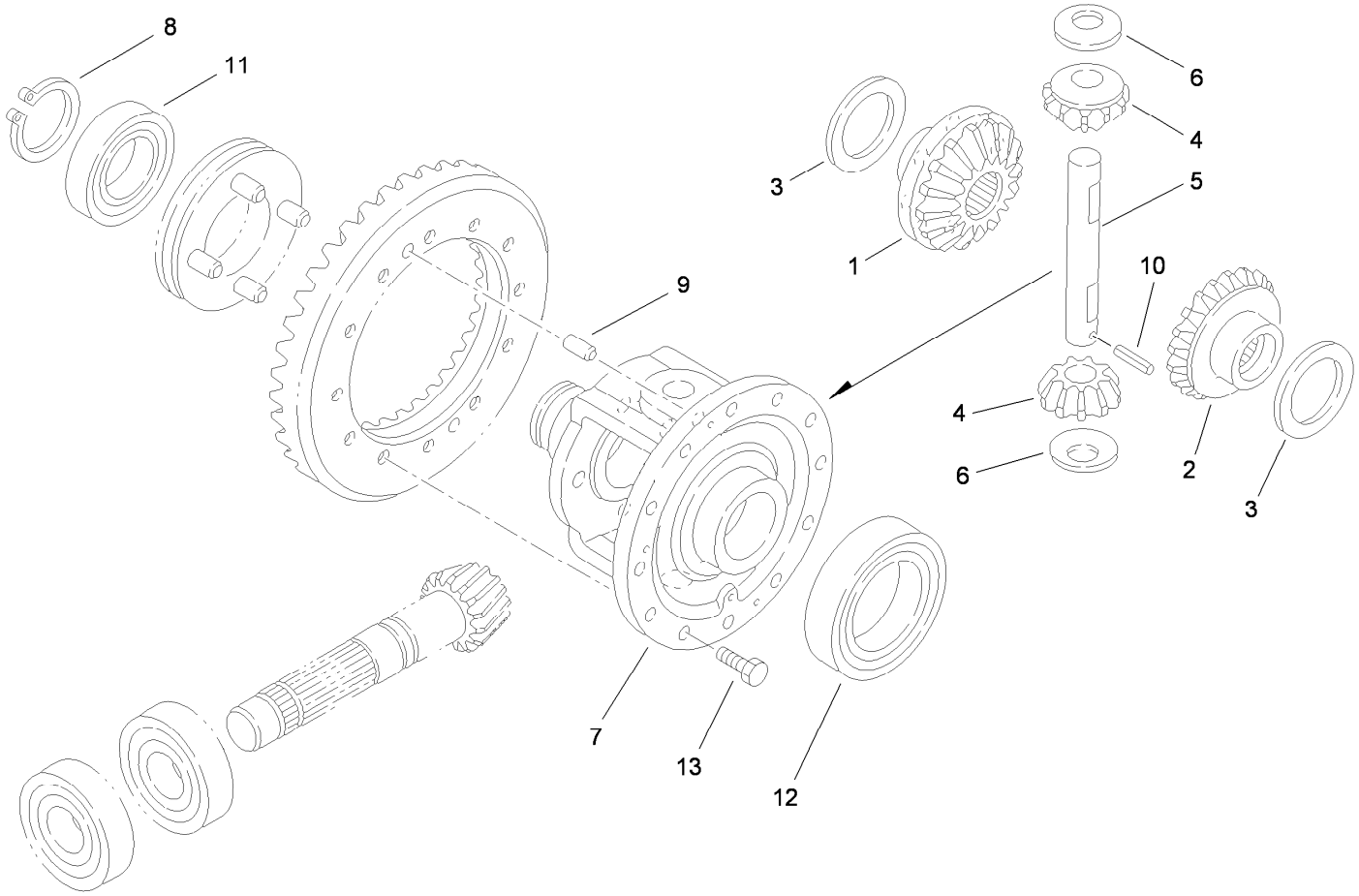

Differential Gear Assembly
Transaxle Assembly No. 115-7783

Ref.	*Part Number*	*Qty.*	*Description*
1	92-0745	1	Gear-Side, LH
2	92-0746	1	Gear-Side, RH
3	92-0747	2	Side-Gear, Left Inner
4	92-0748	2	Pinion-Differential
5	92-0749	1	Shaft-Pinion
6	92-0750	2	Washer
7	92-0720	1	Case-Differential
8	92-0756	1	Ring-Snap
9	92-0765	2	Pin-Parallel
10	92-0768	1	Pin-Roll, Spring
11	92-0775	1	Bearing
12	92-0776	1	Bearing
13	92-0803	12	Bolt

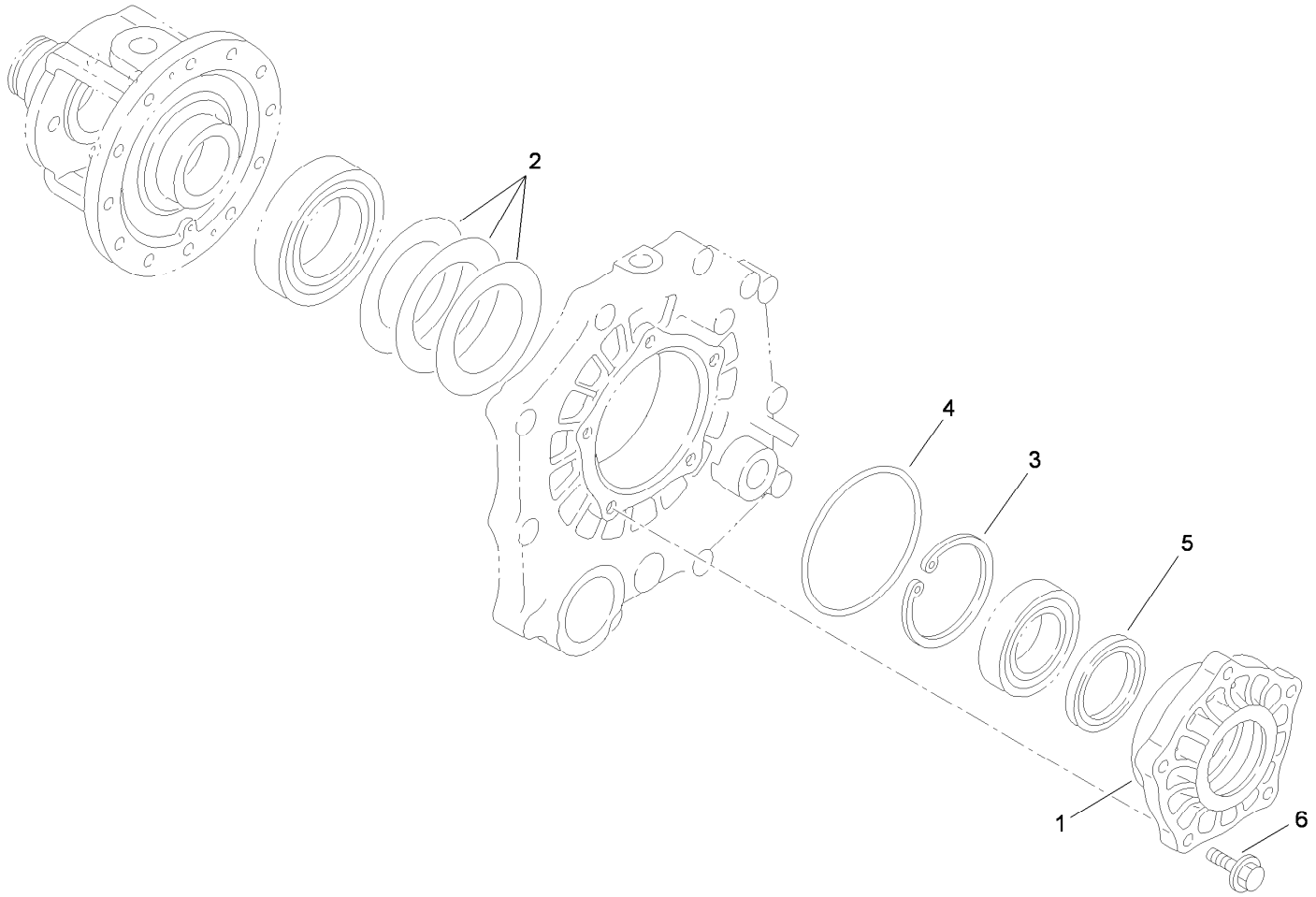

Differential Carrier Assembly
Transaxle Assembly No. 115-7783

Ref.	*Part Number*	*Qty.*	*Description*
1	92-0654	1	Carrier-Differential
2	92-0809	1	Set-Shim
3	92-0760	1	Ring-Snap
4	92-0789	1	O-Ring
5	92-0793	1	Seal-Oil
6	33104-030	5	Screw-HHF

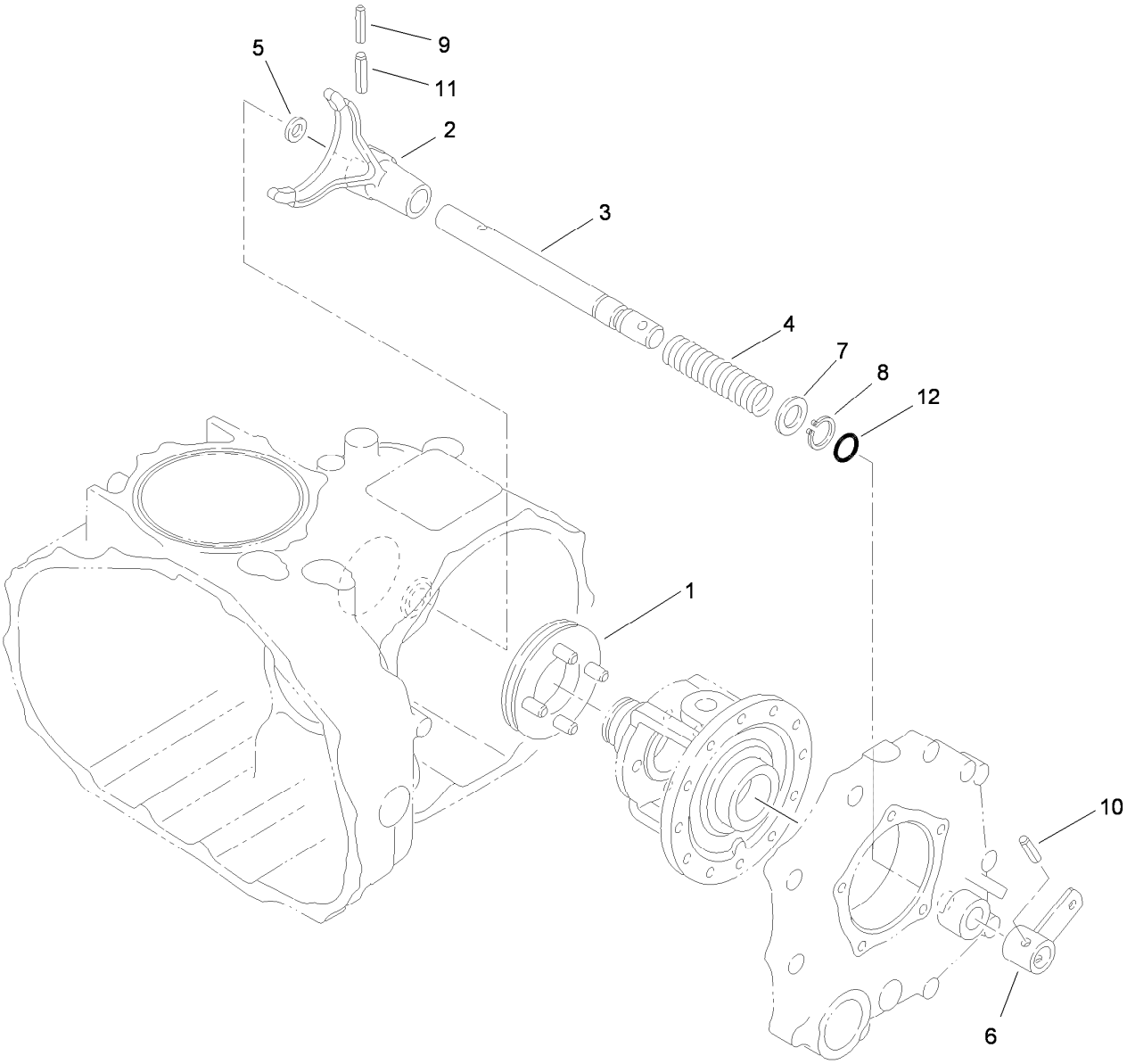

Differential Lock Assembly
Transaxle Assembly No. 115-7783

Ref.	*Part Number*	*Qty.*	*Description*
1	92-0730	1	Slider-Differential, Lock
2	92-0721	1	Fork-Lock, Differential
3	92-0722	1	Shaft-Fork, Lock Differential
4	92-0723	1	Spring-Lock, Differential
5	92-0744	1	Washer
6	92-0724	1	Arm-Lock, Differential
7	92-0733	1	Washer
8	92-0753	1	Ring-Snap
9	92-0768	1	Pin-Roll, Spring
10	92-0770	1	Pin-Roll, Spring
11	92-0771	1	Pin-Roll, Spring
12	92-0787	1	O-Ring

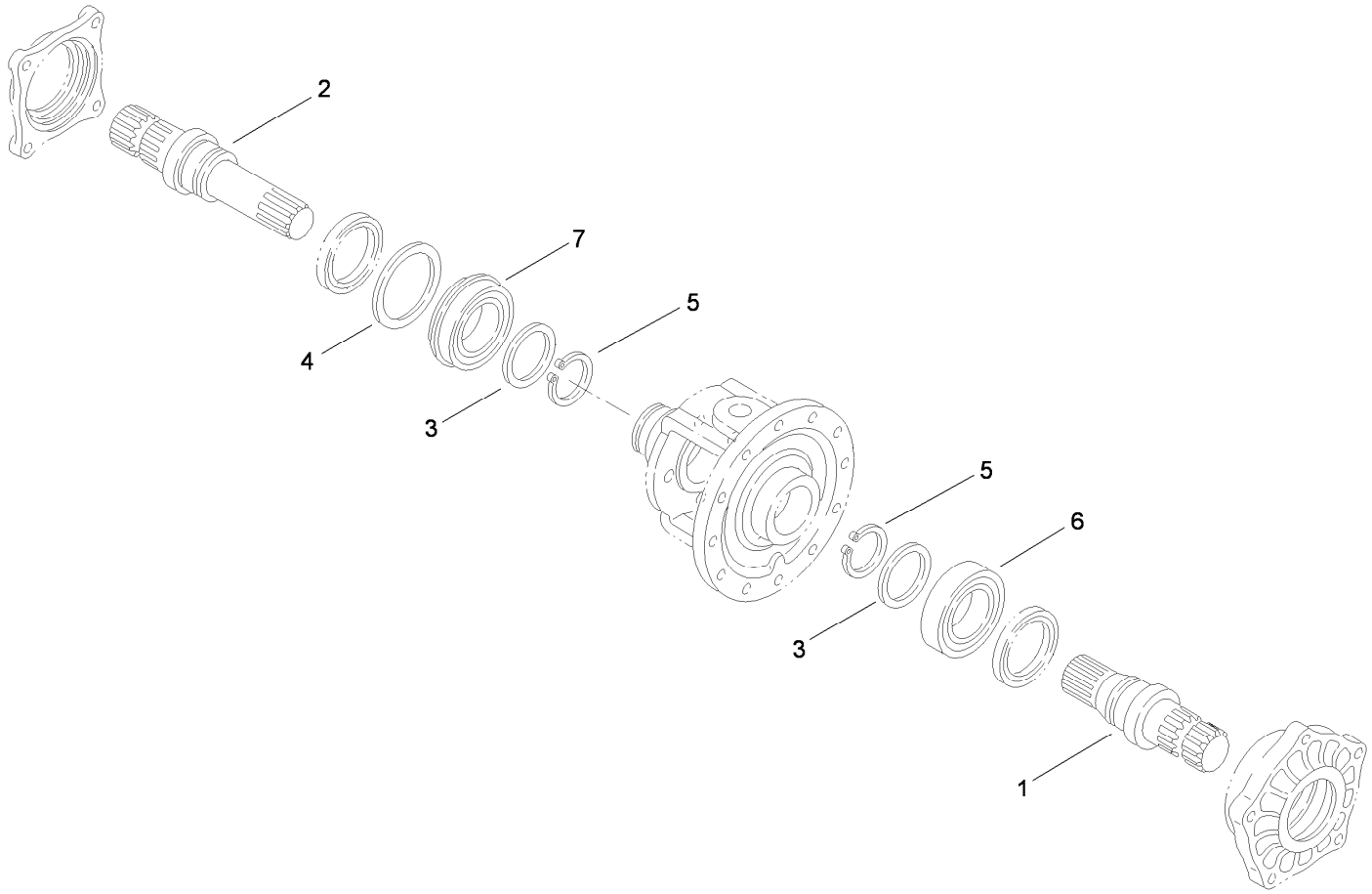

Axle Shaft Assembly
Transaxle Assembly No. 115-7783

Ref.	*Part Number*	*Qty.*	*Description*
1	92-0725	1	Shaft-Axle, Left
2	92-0726	1	Shaft-Axle, Right
3	92-0727	2	Washer
4	92-0728	1	Washer
5	92-0756	2	Ring-Snap
6	92-0775	1	Bearing
7	92-0780	1	Bearing

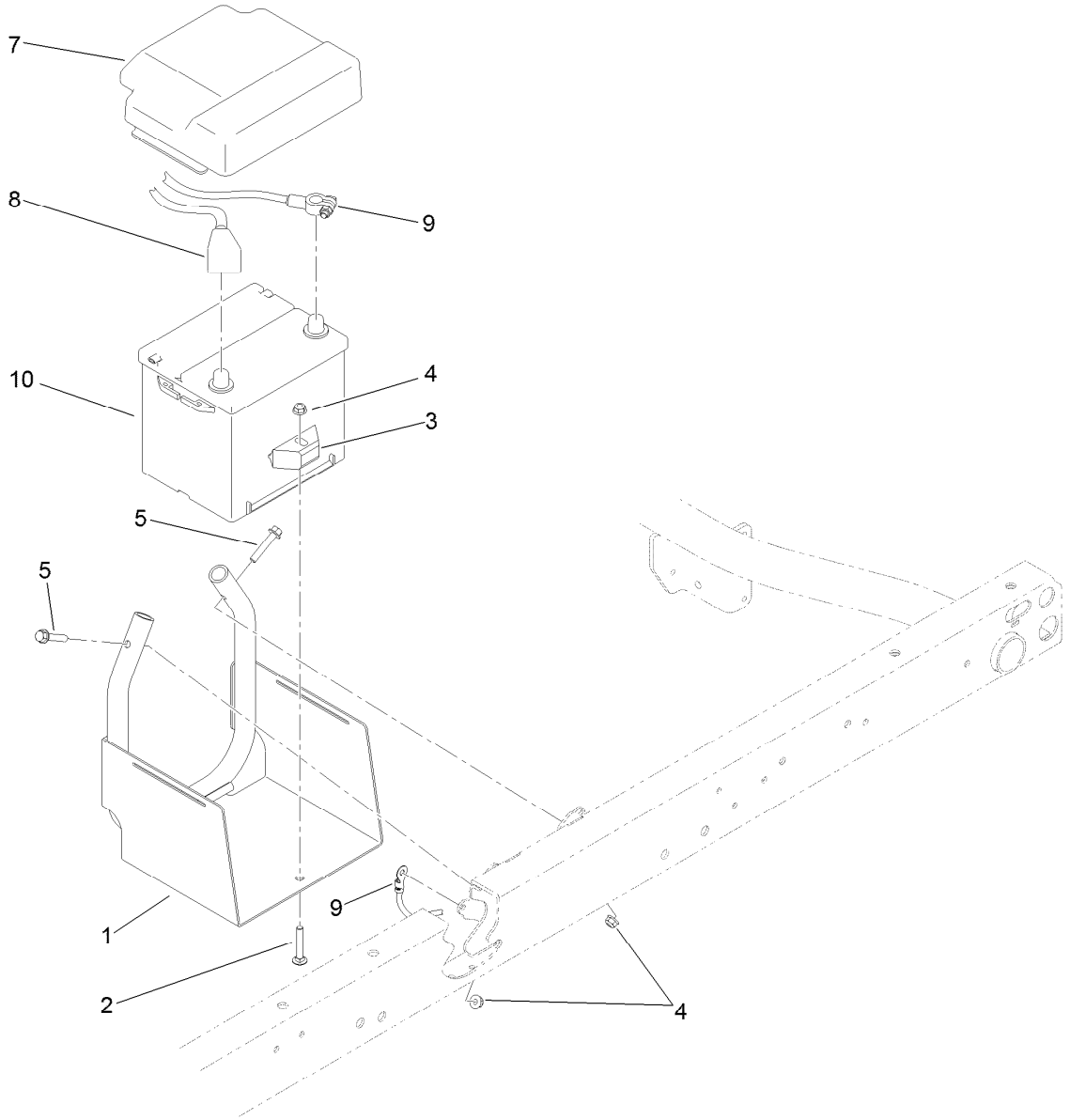

Battery Assembly

Ref.	Part Number	Qty.	Description
1	115-2237-03	1	Tray-Battery
2	3230-6	1	Screw-CARR
3	66-2490	1	Retainer-Battery
4	104-8300	3	Nut-HF, NI
5	94-5780	2	Screw-HWH
7	115-2448	1	Cover-Battery
8	87-8000	1	Cable-Battery, Positive
9	115-8122	1	Cable-Battery, Negative
10	106-5187	1	Battery-Dry

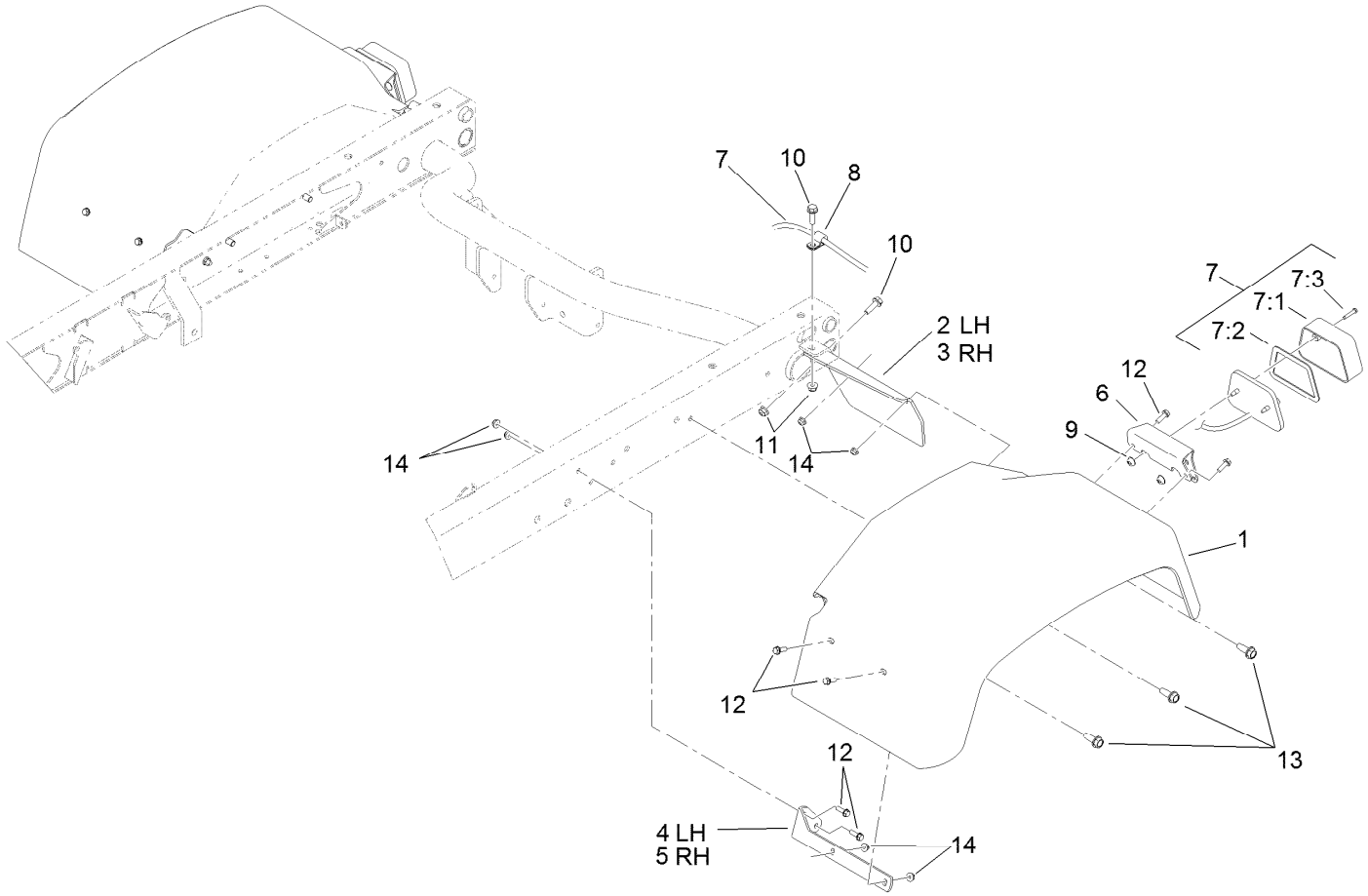

Tail Light and Fender Assembly

Ref.	Part Number	Qty.	Description
1	87-6660	2	Fender-Rear
2	93-8943-03	1	Bracket-Fender, Rear (LH)
3	93-8944-03	1	Bracket-Fender, Rear (RH)
4	93-8941-03	1	Bracket-Fender, Front (LH)
5	93-8942-03	1	Bracket-Fender, Front (RH)
6	115-2289-03	2	Bracket-Light, Tail
7	115-7745	2	Light-Tail, Brake
7:1	87-6300	1	Lens-Light, Tail
7:2	87-6310	1	Gasket-Light, Tail

Ref.	Part Number	Qty.	Description
7:3	32144-93	2	Screw-PPHTF
8	2412-93	2	Clamp-R
9	3290-506	4	Palnut
10	3234-17	4	Screw-HHF
11	104-8300	4	Nut-HF, NI
12	32105-15	12	Screw-HWH
13	105-6245	6	Screw-Tapping
14	104-7201	12	Nut-HF

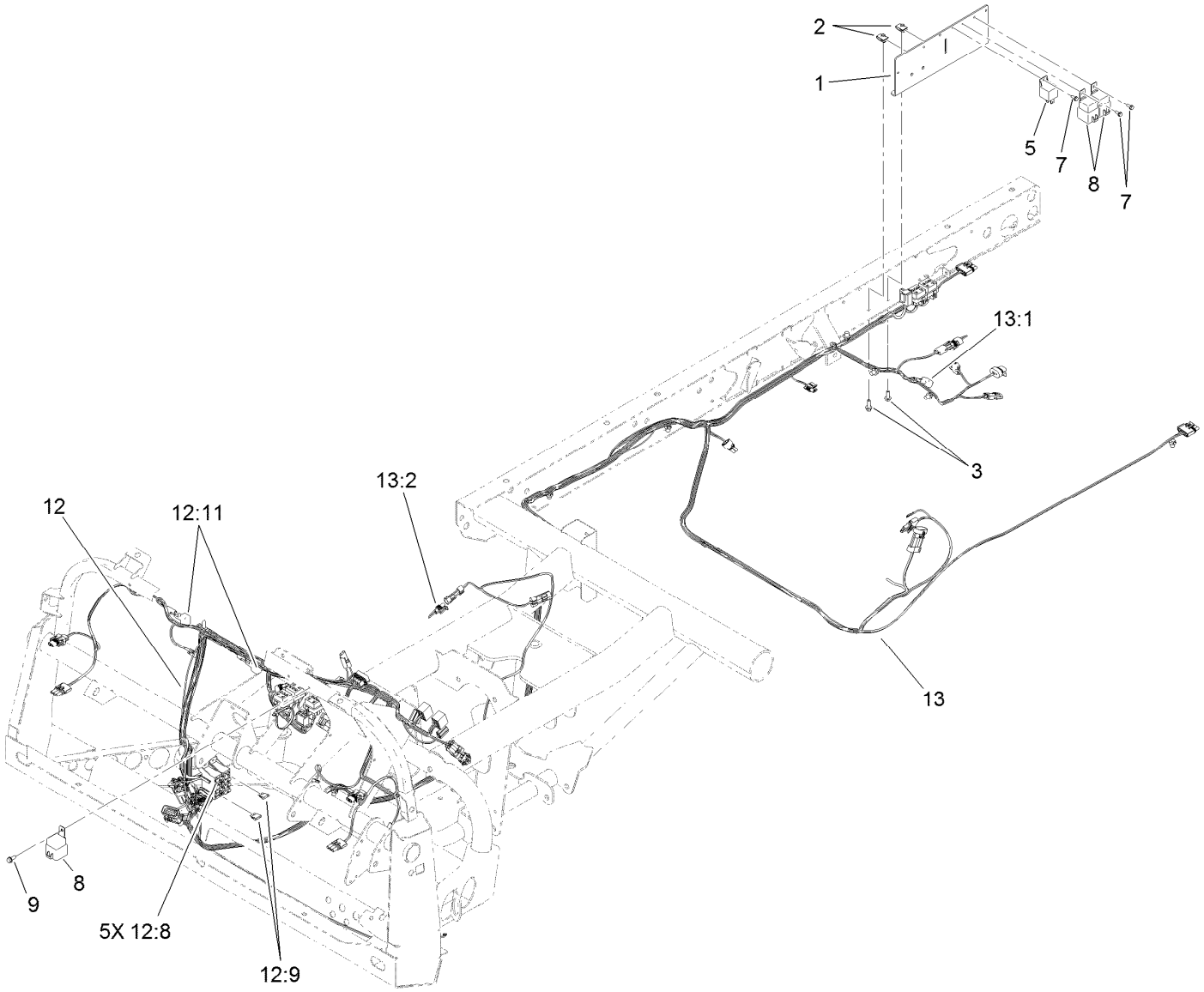

Front and Rear Wire Harness Assembly

Ref.	*Part Number*	*Qty.*	*Description*
1	115-2225	1	Bracket-Relay
2	107069	2	Clip
3	3234-4	2	Screw-HHF
5	99-7435	1	Relay-Power
7	32144-112	3	Screw-HWH
8	99-7430	3	Relay
9	32144-10	1	Screw-HWH
12	120-3990	1	Harness-Wire, Front
12:8	218-578	5	Fuse-Blade, 10 Amp
12:9	109355	2	Fuse-Blade, 15 Amp
12:11	100-4918	2	Diode
13	114-8380	1	Harness-Wire, Rear
13:1	100-4918	1	Diode
13:2	119-7787	1	Harness-Wire, Vertical Lift Shunt

Attachments and Accessories

For 07369 Workman HD Utility Vehicle with Bed

Product Name	Model/Part
Full Area Flatbed	07301
Full Area Flatbed Side Kit	07302
Fold Down Side Kit	07303
2/3 Area Flatbed	07321
2/3 Area Flatbed Side Kit	07322
Bed Liner	07331
Cab	07339
1/3 Area Flatbed	07341
1/3 Area Platform Lift	07347
Canopy	07372
Windshield	07373
Cab Door Kit	07375
Solid Window Cab Door Kit	07376
Hitch Frame Kit	07377
4 Post Roll-Over Protection System	07378
Rear PTO Kit	07419
Hand Throttle Kit	07420
Spiker	08856
Finish Grader	08867
Backup Alarm Kit	107-8037
Premium ATF (Drum)	108-1185
Premium ATF (Pail)	108-1186
Premium All Purpose Grease (Tube)	108-1190
Remote Hydraulics Manifold Kit	110-2626
Tire-Rear, 24x13-12	110-5132
Spark Arrestor Kit	112-1688
Wheel-12in x 8.0in	114-8260
Tachometer And Speedometer Kit	115-7786
Horn Kit	115-7825
Side Mirror Kit	115-7849
Roll-Over Protection System Signal Kit	117-4825
Worklight Kit	117-4827
Remote Hydraulic Float Kit	117-4828
Cab Mirror Kit	117-4830
Receiver Hitch Kit	117-4831
Trailer Signal Kit	117-4836
Trailer Brake Kit	117-4837
24x13-12 Tire and Wheel ASM	117-4838
Sprayer Cylinder Lift Kit, Workman 200 Spray System	117-4846
Harness-Wire, Speedometer Adapter	119-1762
Tapered Nozzle Kit	119-6280
Rectangular Nozzle Kit	119-6281
Nozzle-Extension, Straight	119-6282
Nozzle-Extension, Tapered	119-6283
Nozzle-Extension, Rectangular	119-6284
Canopy for Four-Post Roll-Over Protection System Kit	119-9457

Attachments and Accessories (continued)

Road Light and Homologation Kit	120-5030
Brake and Signal Light Kit	120-5045
Single Nozzle Kit	41024
Hose Reel Kit	41097
Spray Gun Kit 9 (inc. 25ft Of 1/2in Hose)	41133
Pro Foam Concentrate (4 x 1 Gallon)	41157
Sonic Boom Kit	41217
Workman 200 Spray System	41235
Foam Marker Kit	41236
Topdresser 1800	44225
Core Harvester Adapter Kit	44242
Pro Force Debris Blower	44538
Road-Ready Pro Force Debris Blower	44539
Workman HD Bed Mount Kit, Pro Force Debris Blower	44544
Bed Mount Sound Barrier Kit, Pro Force Debris Blower	44546
ProPass 200 Top Dresser with Twin Spinner and Wireless Control	44700
ProPass 200 Top Dresser with Twin Spinner	44701
Twin Spinner	44702
Conveyor and Swivel Kit	44703
Tow-Type Chassis	44704
Tow-Type Chassis Fender Kit	44705
Tow-Type Chassis Hose Assembly Kit	44706
Toro Workman Chassis	44707
Storage Stand	44712
Hydraulic Power Pack	44713
Automatic Tailgate Release Kit	92-1220
Fuse Block	92-2641
PTO Over Running Clutch Kit	92-2655
Topdresser 1800 Lift Kit	92-4452
Mid-Mount Kit for Platform Lift	93-3741
1/3 Area Cover Kit	93-9225
Rear 1/3 Area Mounting Kit	93-9249
Tire-Rear, 23x8.50-12	98-2993
Tire-Rear, Industrial	99-1091

Notes:

Notes:

TORO®

Count on it.