FORM NO. 3319-374

TORO®

MODEL 52501 | OPERATOR'S MANUAL

SOLAR PATH LIGHT



OPERATOR'S MANUAL

- PLEASE READ THIS GUIDE COMPLETELY BEFORE USING THIS PRODUCT.
- KEEP THIS GUIDE FOR FUTURE REFERENCE.

© The Toro Company - 1997

⚠ IMPORTANT

The **SOLAR PATH LIGHT** is a Solar-Powered garden and pathway light. It is weather-proof, and intended to operate in **direct sun light**. Please locate your **SOLAR PATH LIGHT** in a position where the Solar Panel will collect maximum sun light as it will greatly improve its performance.

The **SOLAR PATH LIGHT** contains a rechargeable Nickel-Cadmium (Ni-Cd) battery. This rechargeable battery is shipped without charge. **Please pre-charge it for two days in direct sun light prior to first use, to ensure full charge!**

When the Ni-Cd battery life is exhausted, the battery must be recycled or disposed of properly. For additional information regarding disposal, contact your local county solid waste authority. **DO NOT DISPOSE OF BATTERY IN FIRE.**

A) CONTENTS

Carefully unpack the **SOLAR PATH LIGHT** from the box; the box contains 5 parts:

- **SOLAR PATH LIGHT** main body
- 2 Mounting Poles
- 1 Connector
- 1 Post Tip

B) SET UP

1. Carefully remove the **SOLAR PATH LIGHT** and Mounting Poles from the box.
2. Remove the label from the Top Lens of the **SOLAR PATH LIGHT**.
3. Attach the Post Tip to one of the Mounting Poles.
4. If a taller mount is desired, attach the other Mounting Pole using the Connector.
5. Assemble the Mounting Poles to the **SOLAR PATH LIGHT** by turning them (clock-wise).
6. Choose a brightly sun-lit location. Dig a narrow hole a minimum of 6 inches deep and set the **SOLAR PATH LIGHT** into the ground securely.

Caution: Do not press down on the Top Lens as it may destroy the Solar Panel.

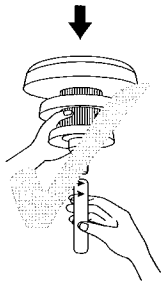

Fig. 1a

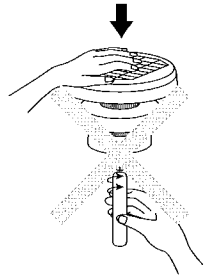

Fig. 1b

⚠ DANGER

Contact with buried utility lines could result in death or serious injury. Before digging any hole or placing stake in ground, contact your utility companies to make sure that there are NO buried lines!

C) PERFORMANCE

During the day, the Solar Panel converts sunlight into electricity and recharges the battery. At night, the light turns on automatically using the electricity stored during that day.

The number of hours of light is determined by the number of hours that direct sunlight strikes the Solar Panel.

1. The number of hours the light will stay on is dependent on your geographical location, weather conditions and seasonal lighting availability.
2. Solar lights do not receive as much direct sunlight in winter months. Therefore, the number of hours the light will stay on will be reduced during winter.
3. If the weather has been cloudy or overcast during the day, the batteries will not be recharged for operation at night. The light must have direct sunlight every day to fully charge the batteries. If the light does not receive enough sunlight one day, it will recharge the next sunny day and resume normal operation.

D) LOCATION

1. Be sure to place the **SOLAR PATH LIGHT** in direct sunlight. A southern exposure is best.
2. Be sure that the **SOLAR PATH LIGHT** is placed such that it will not be in shade during the day. Shade will limit the amount of light you get from your **SOLAR PATH LIGHT**.

E) OPERATION

1) INITIAL CHARGE:

- Place the **SOLAR PATH LIGHT** in full sun for two days to charge the battery before first use. Please move the Power Switch to the OFF position during this charge period.
- You may use the optional AC adapter **(TORO MODEL 52504)** to charge the battery for 24 to 36 hours (maximum) to ensure that it has a full charge prior to normal operation. The charge adapter is designed for INDOOR USE ONLY. Bring the **SOLAR PATH LIGHT** indoors when charging with the adapter. Do not leave the adapter connected for extended periods of time or the batteries will be damaged and they will not recharge.
- Repeat this procedure every three (3) months to fully recharge the battery.

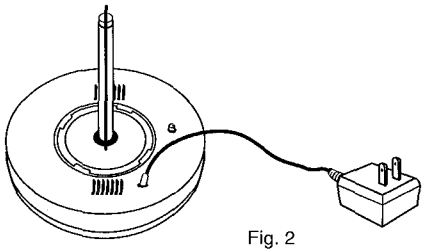

Fig. 2

2) DAILY / NORMAL OPERATION:

The Power Switch is located at the bottom of the **SOLAR PATH LIGHT**. The Power Switch has 2 positions; OFF and AUTO.

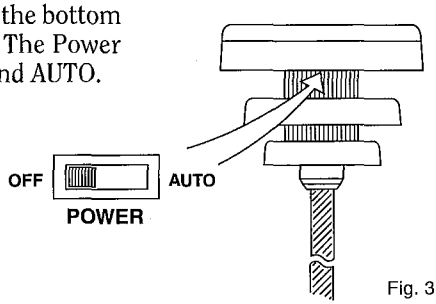

Fig. 3

Turn to AUTO:

- For normal operation of unit, the **SOLAR PATH LIGHT** will automatically turn ON during night time, and OFF during the day.

Turn to OFF:

- For charging, shipping or extended periods of non-use (storage).
- The **SOLAR PATH LIGHT** will not operate when the Power Switch is in the OFF position. However, charging can be made by the Solar Panel or the optional adapter.
- Fully recharge the battery every three (3) months by following the INITIAL CHARGE instructions. Recharge the battery prior to storage of unit.
- Never store unit with Power Switch in the "AUTO" position. This will damage the batteries and they will not recharge.

If your **SOLAR PATH LIGHT** does not function properly, make sure that you have read the above operation instructions, then take the following steps:

1. Examine the **SOLAR PATH LIGHT** to make sure that the solar panel is not broken.
2. Move the switch back and forth between "AUTO" and "OFF" a few times.
3. Make sure that the light sensor (Solar Panel) is located such that no other light is shining on it after dark. It must be in darkness at night or the **SOLAR PATH LIGHT** will sense that it is still daytime and it will not illuminate.
4. Make sure that the **SOLAR PATH LIGHT** is located where it will not be in shade at any time during the day.
5. If your **SOLAR PATH LIGHT** is not functioning, turn the Power Switch to the "OFF" position and leave it off for a few days, allowing the battery to charge to full capacity. Then turn the switch to the "AUTO" position and watch it that night. Make sure that you follow the instructions above.

To order additional parts or for technical assistance: 1 (800) 321-8676.

G) REPLACING THE BATTERY AND FLUORESCENT LAMP:

⚠ IMPORTANT

To avoid damage to the product, the Power Switch must be in the OFF position when replacing the fluorescent lamp or battery.

⚠ CAUTION

Fluorescent lamp may shatter if dropped or damaged. Broken lamp with sharp glass fragments may result in personal injury. Wear clean gloves and eye protection when handling lamp. Be extremely careful when handling lamp; especially if it is broken, to avoid cuts.

1) To replace the Battery:
Rotate the **SOLAR PATH LIGHT** housing counter-clockwise and remove it from the diffusion lens. Be careful not to break the fluorescent lamp.

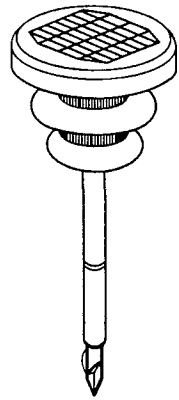

Fig. 4

2) To replace the battery, remove the six screws from the cover. You can see the battery inside. Take the battery out and disconnect the 2 battery wire leads gently. Remove and replace the battery (use 6V/ 600mAh 'AA' Ni-Cd battery). Attach the 2 wire leads to the battery contacts. Red to (+), Black to (-). Put the battery back into place.

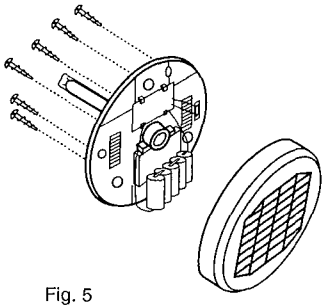

Fig. 5

3) To replace fluorescent lamp, slide the Power Switch to the "OFF" position. Rotate the fluorescent lamp 90 degrees, then take it out. Replace with a new fluorescent lamp.

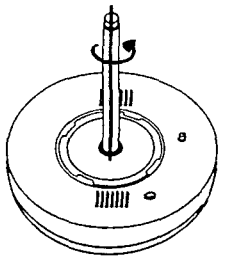

Fig. 6

⚠ CAUTION

Short-circuiting battery terminals or wires generates heat which may damage equipment and cause burns. A short-circuit will occur if the battery terminals contact each other through frayed wires, metallic tools, or other conductive objects such as jewelry or keys. Do not short-circuit battery terminals or wires. The battery might rupture resulting in personal injury.

⚠ IMPORTANT

To avoid damage to product do not immerse product in water or any liquid. Do not pull, cut or pinch any wires when replacing battery.

♲ Nickel Cadmium batteries must be recycled or disposed of properly.

H) CLEANING

It is important that the Solar Panel is kept free of dirt and debris. A dirty Solar Panel will not allow the battery to fully charge. Clean the top surface of the unit regularly with a soft cloth dampened with water. Do not use solvents. Take extreme care not to scratch the clear cover.

Wintertime tip: Clean snow and debris off the top of the unit so that the battery can recharge.

The Toro Promise

A Full Warranty

The Toro Company warrants this TORO Product against defects in material or workmanship.
The following time periods apply from date of purchase.

- Standard Light Kits Two years

  (Pathway Light, Floodlight fixtures, and Solar Powered Lights)

- Premium Light Kits Five years

  (Traditional Pathway, Varifocus®, Colonial, Contemporary, and Wood Deck fixtures)

To receive a replacement or repair, at Toro's option, just return the defective component (light fixture, power pack or wire), postage prepaid, to the seller or the TORO Service Center, 5300 Shoreline Blvd., Mound, MN 55364 along with proof of purchase. This warranty covers product defects only. Warranty excludes bulbs.

The Toro Company is not liable for indirect, incidental or consequential damages in connection with the use of TORO products covered by this warranty. Some states do not allow the exclusion or limitation of incidental or consequential damages, so the above limitation may not apply to you.

This warranty gives you specific rights, and you may have other rights, which vary from state to state.