Form No. 3417-368 Rev A

TORO®

Count on it.

Operator's Manual

TimeCutter® ZS 4200T or ZS 5000 Riding Mower

Model No. 74661—Serial No. 400900000 and Up
Model No. 74667—Serial No. 400000000 and Up

Register at www.Toro.com.
Original Instructions (EN)

CE

3417-368 A

This product complies with all relevant European directives; for details, please see the separate product specific Declaration of Conformity (DOC) sheet.

Gross Horsepower

The gross or net horsepower of this engine was laboratory rated by the engine manufacturer in accordance with the Society of Automotive Engineers (SAE) J1940 or J2723. As configured to meet safety, emission, and operating requirements, the actual engine torque on this class of mower will be significantly lower.

Go to www.Toro.com to view specifications on your mower model.

Important: **If you are using a machine with a Toro engine above 1500 m (5,000 ft) for a continuous period, ensure that the High Altitude Kit has been installed so that the engine meets CARB/EPA emission regulations. The High Altitude Kit increases engine performance while preventing spark-plug fouling, hard starting, and increased emissions. Once you have installed the kit, attach the high-altitude label next to the serial decal on the machine. Contact any Authorized Toro Service Dealer to obtain the proper High Altitude Kit and high-altitude label for your machine. To locate a dealer convenient to you, access our website at www.Toro.com or contact our Toro Customer Care Department at the number(s) listed in your Emission Control Warranty Statement.**

Remove the kit from the engine and restore the engine to its original factory configuration when running the engine under 1500 m (5,000 ft). Do not operate an engine that has been converted for high-altitude use at lower altitudes; otherwise, you could overheat and damage the engine.

If you are unsure whether or not your machine has been converted for high-altitude use, look for the following label (Figure 3).

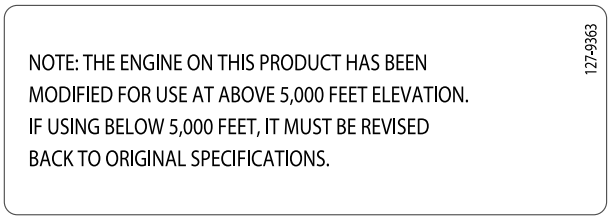

Figure 3

Introduction

This machine is a ride-on, rotary-blade intended to be used by homeowners in residential applications. It is primarily designed for cutting grass on well-maintained lawns. It is not designed for cutting brush, mowing grass and other growth alongside highways, or for agricultural uses.

Read this information carefully to learn how to operate and maintain your product properly and to avoid injury and product damage. You are responsible for operating the product properly and safely.

You may contact Toro directly at www.Toro.com for product safety and operation training materials, accessory information, help finding a dealer, or to register your product.

For the *Operator's Manual*, the complete warranty details, or to register your product, use the QR code or visit www.Toro.com. You may also call us at 1-888-384-9939 to request a written copy of the product warranty.

Whenever you need service, genuine Toro parts, or additional information, contact an Authorized Service Dealer or Toro Customer Service and have the model and serial numbers of your product ready. Figure 1 identifies the location of the model and serial numbers on the product. Write the numbers in the space provided.

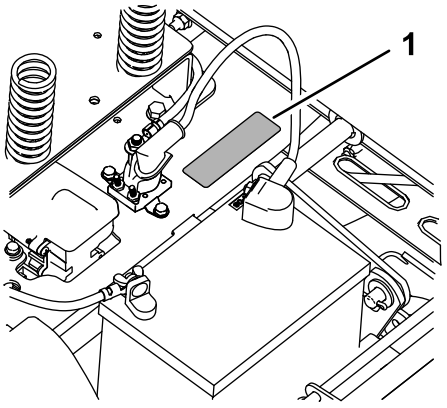

Figure 1
Under the seat

1. Model and serial-number plate

Write the product model and serial numbers in the space below:

Model No. _____

Serial No. _____

© 2017—The Toro® Company
8111 Lyndale Avenue South
Bloomington, MN 55420

Contact us at www.Toro.com.
Printed in the USA
All Rights Reserved

This manual identifies potential hazards and has safety messages identified by the safety-alert symbol (Figure 2), which signals a hazard that may cause serious injury or death if you do not follow the recommended precautions.



g000502

Figure 2
Safety-alert symbol

This manual uses 2 words to highlight information. **Important** calls attention to special mechanical information and **Note** emphasizes general information worthy of special attention.

Contents

Safety 4
General Safety 4
Slope Indicator 5
Safety and Instructional Decals 6
Product Overview 14
Controls 14
Before Operation 16
Before Operation Safety 16
Adding Fuel 16
Performing Daily Maintenance 17
Breaking in a New Machine 17
Using the Safety-Interlock System 18
Positioning the Seat 18
Adjusting the Motion-Control Levers 19
Converting to Side Discharge 19
During Operation 22
During Operation Safety 22
Operating the Mower Blade-Control Switch (PTO) 24
Operating the Throttle 25
Operating the Choke 25
Starting the Engine 26
Shutting Off the Engine 26
Using the Motion-Control Levers 26
Driving the Machine 26
Using the Side Discharge 29
Adjusting the Height of Cut 29
Adjusting the Anti-Scalp Rollers 30
Operating Tips 31
After Operation 32
After Operation Safety 32
Pushing the Machine by Hand 32
Transporting the Machine 33
Maintenance 35
Recommended Maintenance Schedule(s) 35
Pre-Maintenance Procedures 36
Maintenance Safety 36
Raising the Seat 36
Releasing the Mower-Deck Curtain 36
Lubrication 37
Greasing the Bearings 37
Engine Maintenance 37
Engine Safety 37
Servicing the Air Cleaner 37
Servicing the Engine Oil 39
Servicing the Spark Plug 41
Cleaning the Cooling System 42
Fuel System Maintenance 43
Replacing the In-Line Fuel Filter 43
Electrical System Maintenance 44
Electrical System Safety 44
Servicing the Battery 44
Servicing the Fuses 45
Drive System Maintenance 46
Checking the Tire Pressure 46
Releasing the Electric Brake 46

Belt Maintenance 47
Replacing the Mower-Deck Belt 47
Mower Maintenance 48
Servicing the Cutting Blades 48
Leveling the Mower Deck 51
Removing the Mower Deck 53
Installing the Mower Deck 54
Replacing the Grass Deflector 54
Cleaning 55
Washing the Underside of the Mower Deck 55
Disposing of Waste 55
Storage 56
Storage Safety 56
Cleaning and Storage 56
Storing the Battery 57
Troubleshooting 58
Schematics 60

Safety

This machine has been designed in accordance with EN ISO 5395:2013.

General Safety

This product is capable of amputating hands and feet and of throwing objects. Always follow all safety instructions to avoid serious personal injury.

Using this product for purposes other than its intended use could prove dangerous to you and bystanders.

- Do not operate the machine near drop-offs, ditches, embankments, water, or other hazards, or on slopes greater than 15 degrees.
- Read and understand the contents of this *Operator's Manual* before starting the engine.
- Do not put your hands or feet near moving components of the machine.
- Do not operate the machine without all guards and other safety protective devices in place and working on the machine.
- Keep children and bystanders out of the operating area. Never allow children to operate the machine.
- Stop the machine and shut off the engine before servicing, fueling, or unclogging the machine.

Improperly using or maintaining this machine can result in injury. To reduce the potential for injury, comply with these safety instructions and always pay attention to the safety-alert symbol, which means Caution, Warning, or Danger—personal safety instruction. Failure to comply with these instructions may result in personal injury or death.

You can find additional safety information where needed throughout this manual.

Slope Indicator

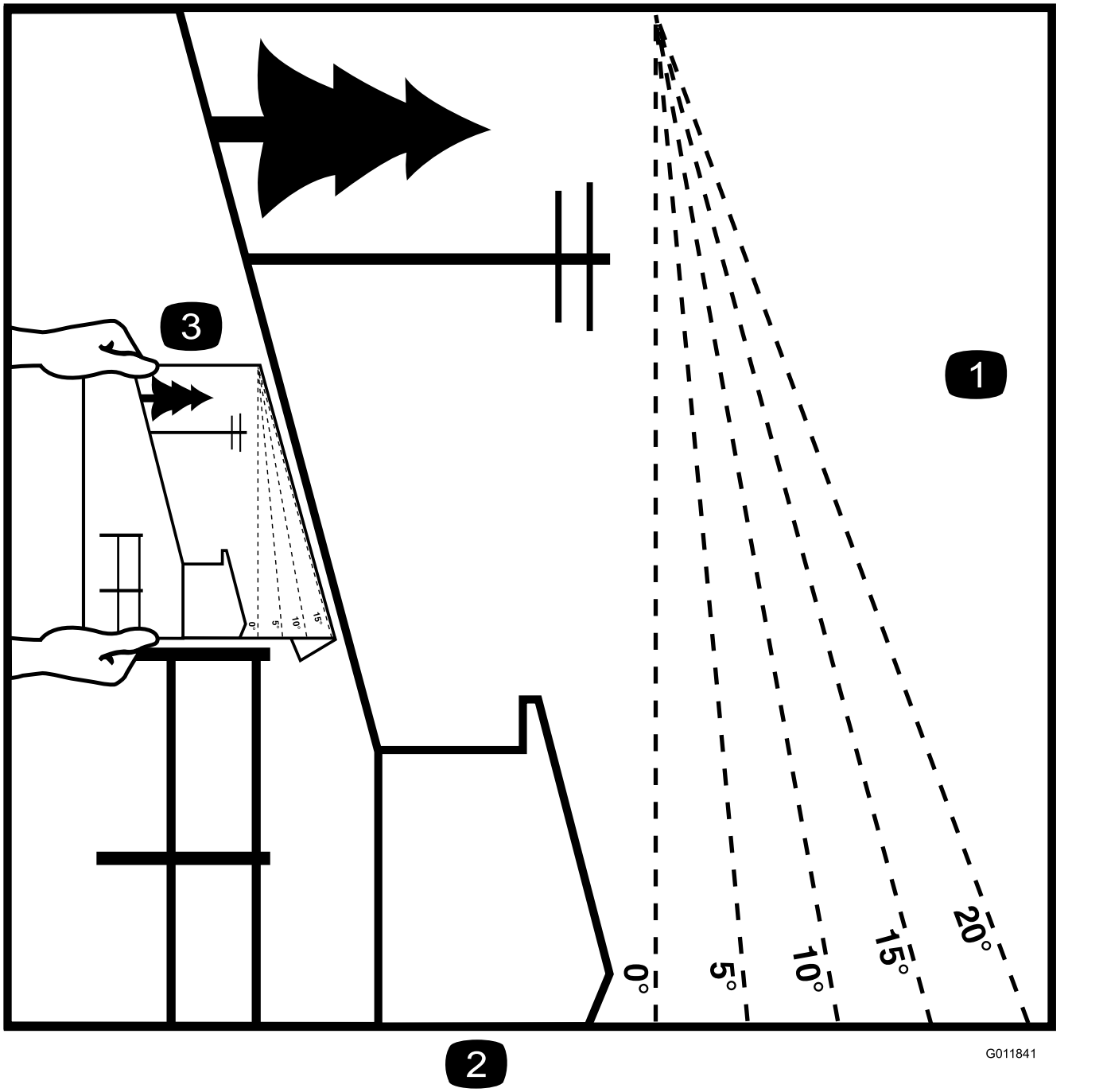

Figure 4

This page may be copied for personal use.

1. The maximum slope you can operate the machine on is **15 degrees**. Use the slope chart to determine the degree of slope of hills before operating. **Do not operate this machine on a slope greater than 15 degrees.** Fold along the appropriate line to match the recommended slope.
2. Align this edge with a vertical surface, a tree, building, fence pole, etc.
3. Example of how to compare slope with folded edge

Safety and Instructional Decals

Safety decals and instructions are easily visible to the operator and are located near any area of potential danger. Replace any decal that is damaged or missing.



decalbatterysymbols

Battery Symbols

Some or all of these symbols are on your battery.

1. Explosion hazard
2. No fire, open flame, or smoking
3. Caustic liquid/chemical burn hazard
4. Wear eye protection.
5. Read the *Operator's Manual.*
6. Keep bystanders a safe distance away from the battery.
7. Wear eye protection; explosive gases can cause blindness and other injuries.
8. Battery acid can cause blindness or severe burns.
9. Flush eyes immediately with water and get medical help fast.
10. Contains lead; do not discard

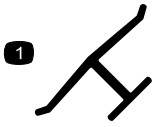

decaloemmarkt

Manufacturer's Mark

1. Indicates the blade is identified as a part from the original machine manufacturer.

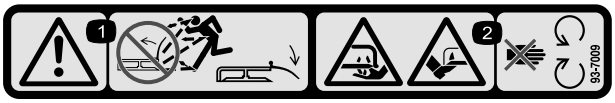

decal93-7009

93-7009

1. Warning—do not operate the mower with the deflector up or removed; keep the deflector in place.
2. Cutting/dismemberment hazard of hand or foot, mower blade—stay away from moving parts.

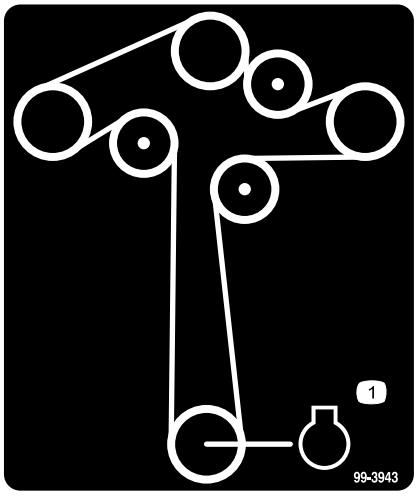

decal99-3943

99-3943

For Models with 127 cm (50 inch) Decks

1. Engine

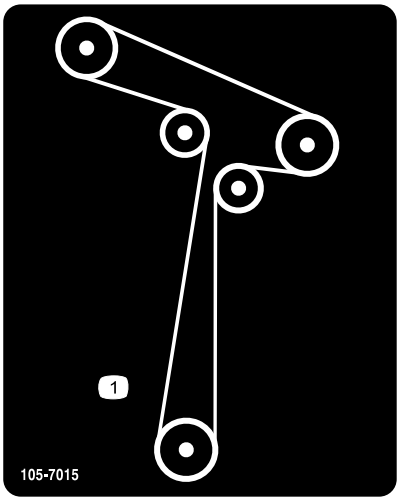

decal105-7015

105-7015

For Models with 107 cm (42-inch) Decks

1. Belt routing

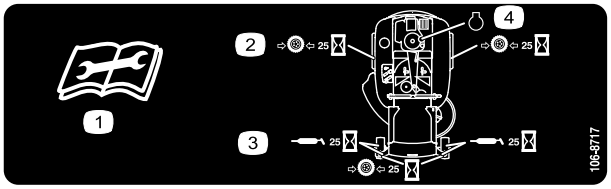

decal106-8717

106-8717

1. Read the instructions before servicing or performing maintenance.
2. Check tire pressure every 25 operating hours.
3. Grease every 25 operating hours.
4. Engine

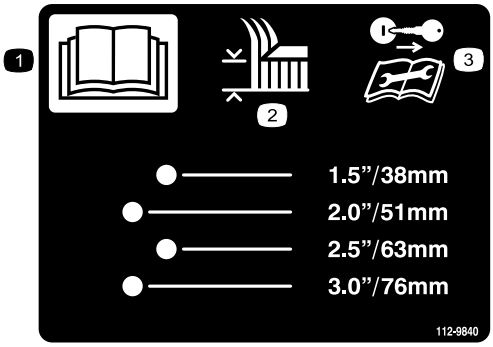

decal112-9840

112-9840

For Models with 127 cm (50 inch) Decks

1. Read the *Operator's Manual*.
2. Height of cut
3. Remove the key and read the instructions before servicing or performing maintenance.

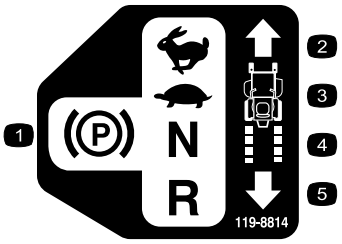

decal119-8814

119-8814

1. Parking position
2. Fast
3. Slow
4. Neutral
5. Reverse

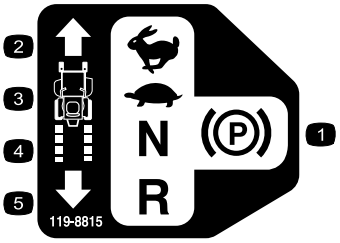

decal119-8815

119-8815

1. Parking position
2. Fast
3. Slow
4. Neutral
5. Reverse

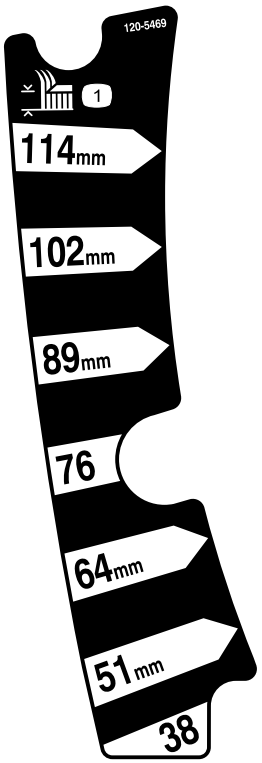

decal120-5469

120-5469

For Models with 107 cm (42 inch) Decks

1. Height of cut

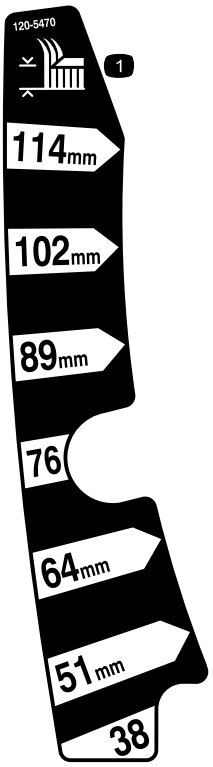

decal120-5470

120-5470

For Models with 127 cm (50 inch) Decks

1. Height of cut

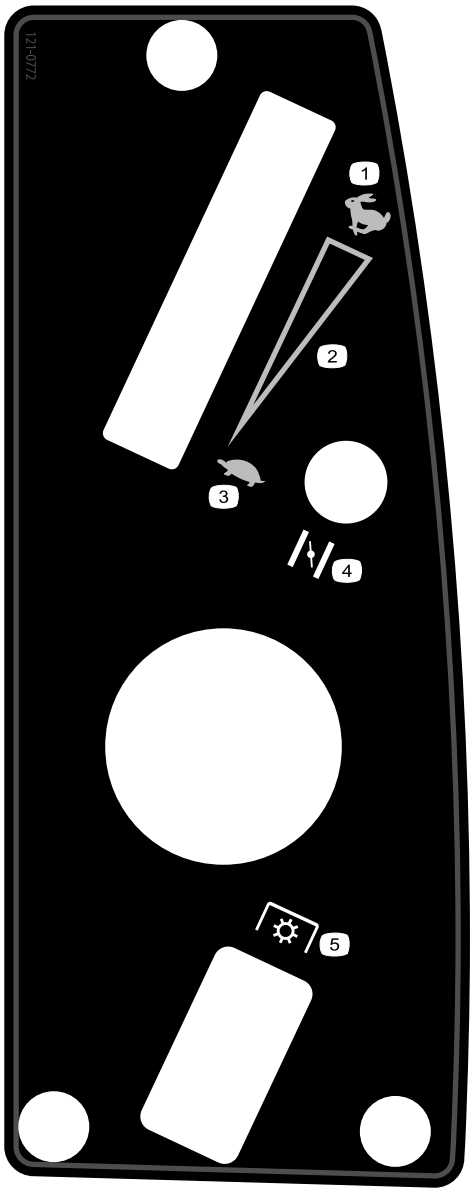

decal121-0772

121-0772

For Models with 107 cm (42 inch) Decks

1. Fast
2. Continuous-variable setting
3. Slow
4. Choke
5. Power takeoff (PTO), blade-control switch

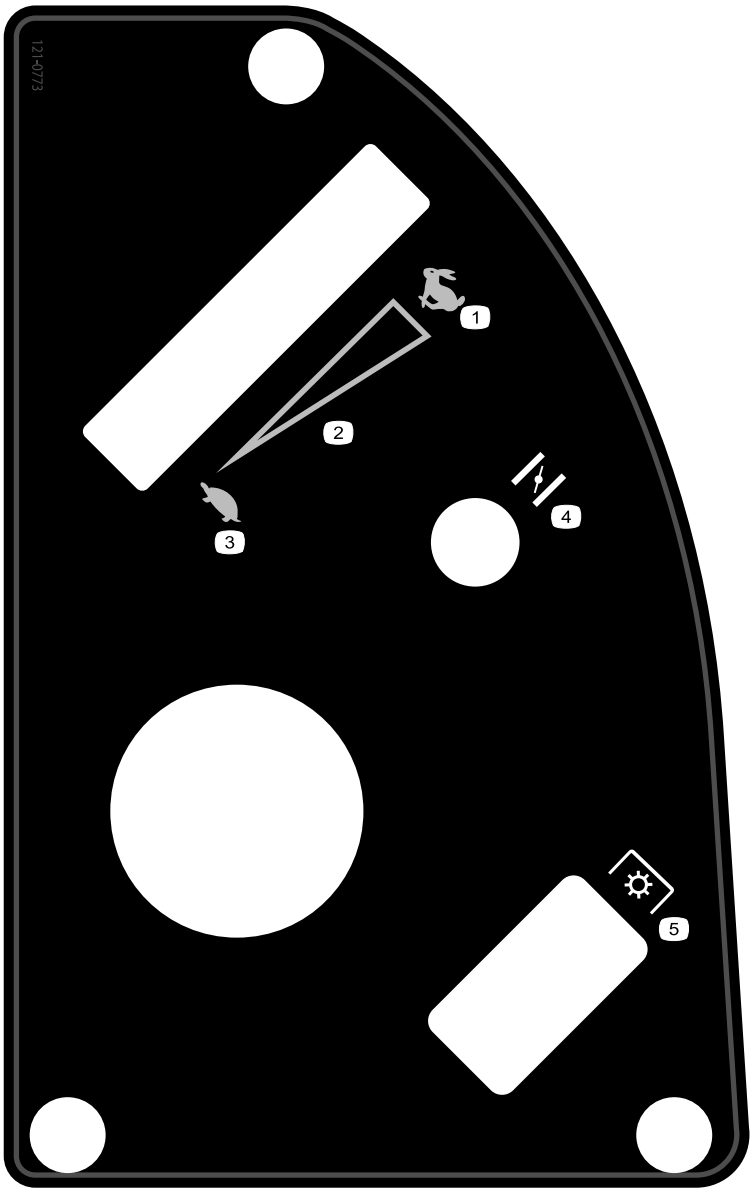

decal121-0773

121-0773

For Models with 127 cm (50 inch) Decks

1. Fast
2. Continuous-variable setting
3. Slow
4. Choke
5. Power takeoff (PTO), blade-control switch

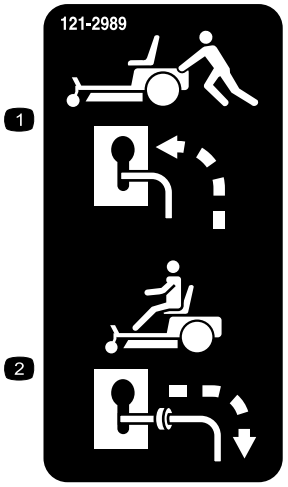

decal121-2989b

121-2989

1. Bypass lever position for pushing the machine
2. Bypass lever position for operating the machine

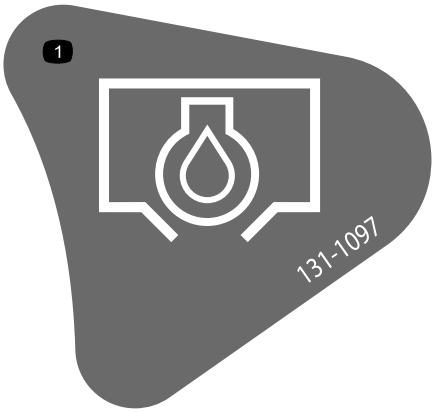

decal131-1097

131-1097

1. Oil drain

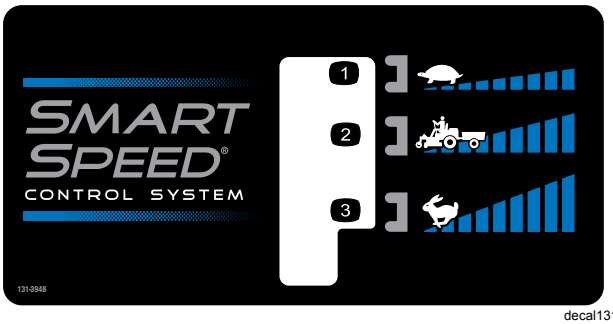

decal131-3948

131-3948

1. Slow
2. Towing
3. Fast

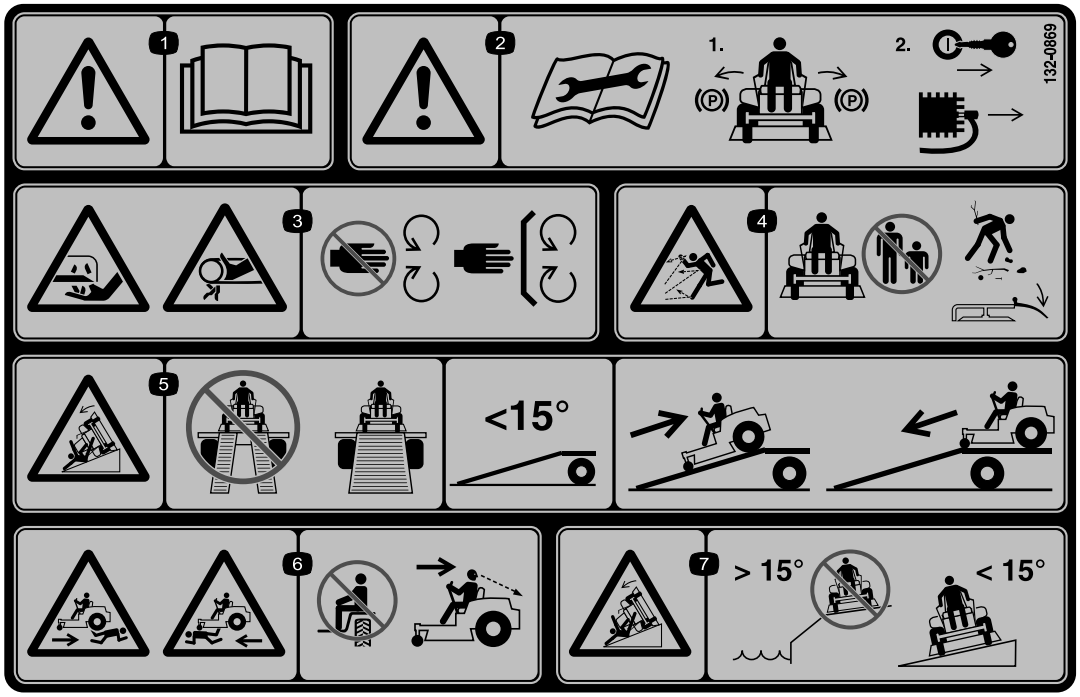

decal132-0869

132-0869

Note: This machine complies with the industry standard stability test in the static lateral and longitudinal tests with the maximum recommended slope indicated on the decal. The operator must review the instructions for operating the machine on slopes in the *Operator's Manual* and review the conditions in which the machine is being operated to determine whether the machine can be operated in the conditions on that day and at that site. Changes in the terrain can result in a change in slope operation for the machine. If possible, keep the cutting units lowered to the ground while operating the machine on slopes. Raising the cutting units while operating on slopes can cause the machine to become unstable.

1. Warning—read the *Operator's Manual*.
2. Warning—before servicing, engage the parking brake, remove the key and the spark plug connection.
3. Cutting hazard of hand, mower blade; pinching hazard of hand, belt—keep hands and feet away from moving parts; keep all guards and shields in place.
4. Thrown object hazard—keep bystanders away from the machine; remove debris from the area before mowing; keep the deflector shield down.
5. Ramp tipping hazard—when loading onto a trailer, do not use dual ramps; use only a single ramp wide enough for the machine and that has an incline less than 15 degrees; back up the ramp (in reverse) and drive forward off the ramp.
6. Bodily harm hazard—no riders; look behind you when mowing in reverse.
7. Tipping hazard on slopes—do not use on slopes near open water; do not use on slopes greater than 15 degrees.

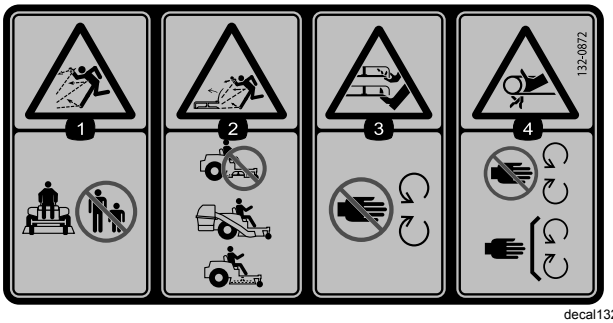

decal132-0872

132-0872

1. Thrown object hazard—keep bystanders away from the machine.
2. Thrown object hazard, raised baffle—do not operate the machine with an open deck; use a bagger or a baffle.
3. Severing hazard of hand or foot—keep away from moving parts.
4. Entanglement hazard—keep away from moving parts; keep all guards and shields in place.

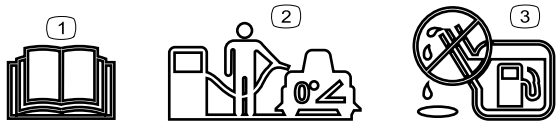

decal138-2456

138-2456

1. Read the *Operator's Manual*.
2. Park the machine on a level surface when filling the fuel tank.
3. Do not overfill the fuel tank.

Product Overview

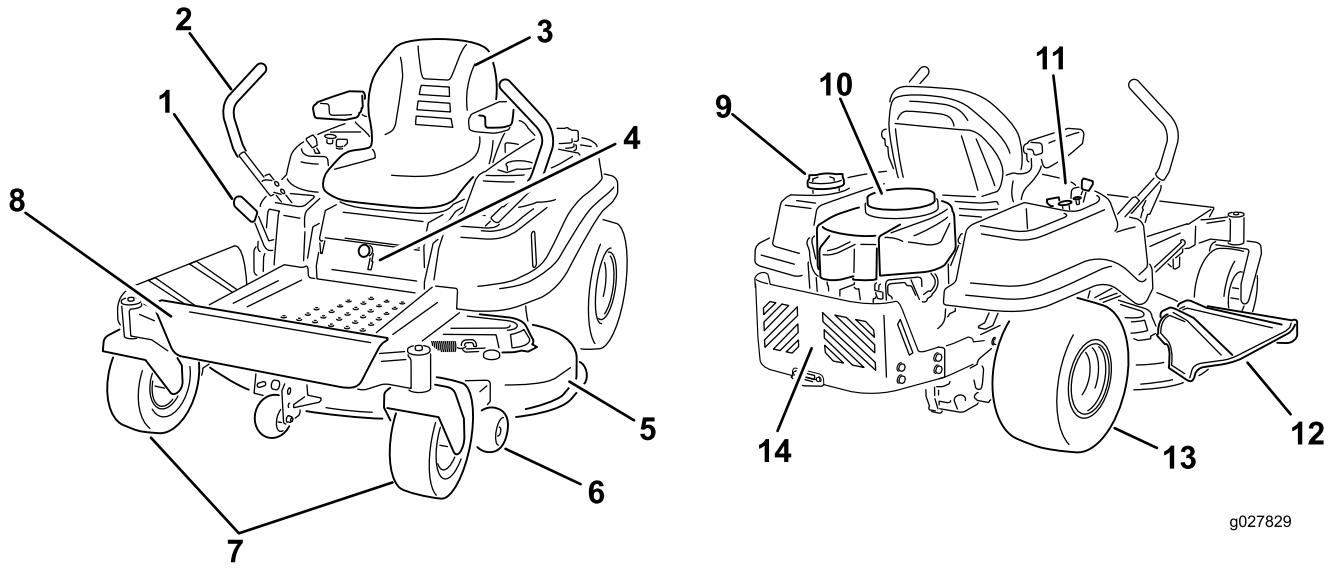

g027829

Figure 5

1. Height-of-cut lever
2. Motion-control levers
3. Operator seat
4. Smart Speed™ lever
5. Mower deck
6. Anti-scalp roller
7. Front caster wheels
8. Footrest
9. Fuel-tank cap
10. Engine
11. Control panel
12. Deflector
13. Rear drive wheel
14. Engine guard

Controls

Become familiar with all the controls before you start the engine and operate the machine.

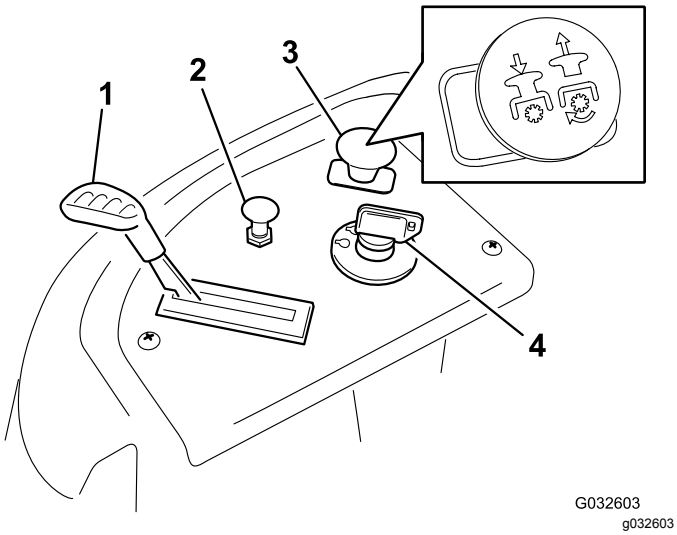

Figure 6

Control panel

1. Throttle
2. Choke
3. Blade-control switch (power takeoff)
4. Ignition switch

Key Switch

The key switch, used to start and shut off the engine, has 3 positions: OFF, RUN, and START. Refer to Starting the Engine (page 26).

Throttle Control

The throttle controls the engine speed, and it has a continuous-variable setting from the SLOW to FAST position (Figure 6).

Choke Control

Use the choke control to start a cold engine.

Blade-Control Switch (Power Takeoff)

The blade-control switch, represented by a power-takeoff (PTO) symbol, engages and disengages power to the mower blades (Figure 6).

Motion-Control Levers

Use the motion-control levers to drive the machine forward, reverse, and turn either direction (Figure 5).

Park Position

Move the motion-control levers outward from the center to the PARK position when exiting the machine (Figure 27). Always position the motion-control levers into the PARK position when you stop the machine or leave it unattended.

Smart Speed™ Control System Lever

The Smart Speed™ Control-System lever, located below the operating position, gives you a choice to drive the machine at 3 speed ranges— trim, tow, and mow (Figure 30).

Fuel-Presence Window

You can use the fuel window, located on the left side of the machine, to verify the presence of fuel in the tank (Figure 7).

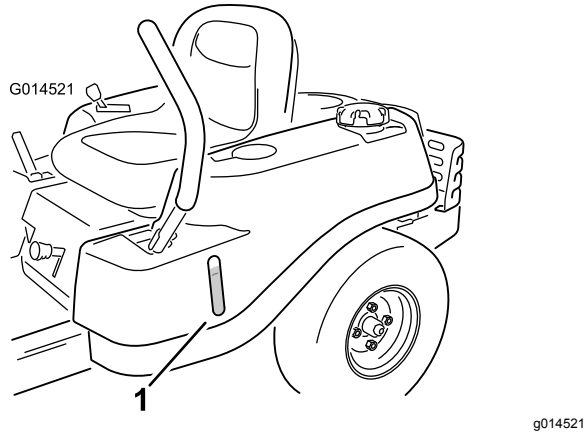

Figure 7

1. Fuel-presence window

Height-of-Cut Lever

Use the height-of-cut lever to lower and raise the deck from the seated position. Moving the lever up (toward you) raises the deck from the ground and moving the lever down (away from you) lowers the deck toward the ground. Adjust the height-of-cut only while the machine is not moving (Figure 31).

Attachments/Accessories

A selection of Toro approved attachments and accessories is available for use with the machine to enhance and expand its capabilities. Contact your Authorized Service Dealer or Distributor or go to www.Toro.com for a list of all approved attachments and accessories.

To best protect your investment and maintain optimal performance of your Toro equipment, count on Toro genuine parts. When it comes to reliability, Toro delivers replacement parts designed to the exact engineering specification of our equipment. For peace of mind, insist on Toro genuine parts.

Operation

Note: Determine the left and right sides of the machine from the normal operating position.

Before Operation

Before Operation Safety

General Safety

- Never allow children or untrained people to operate or service the machine. Local regulations may restrict the age of the operator. The owner is responsible for training all operators and mechanics.
- Become familiar with the safe operation of the equipment, operator controls, and safety signs.
- Know how to stop the machine and shut off the engine quickly.
- Check that operator-presence controls, safety switches, and shields are attached and functioning properly. Do not operate the machine unless they are functioning properly.
- Before mowing, always inspect the machine to ensure that the blades, blade bolts, and cutting assemblies are in good working condition. Replace worn or damaged blades and bolts in sets to preserve balance.
- Inspect the area where you will use the machine and remove all objects that the machine could throw.
- Evaluate the terrain to determine the appropriate equipment and any attachments or accessories required to operate the machine properly and safely.

Fuel Safety

- To avoid personal injury or property damage, use extreme care in handling fuel. Fuel vapors are flammable and explosive.
- Extinguish all cigarettes, cigars, pipes, and other sources of ignition.
- Use only an approved fuel container.
- Do not remove the fuel cap or add fuel to the fuel tank while the engine is running or while hot.
- Do not refuel the machine indoors.
- Do not store the machine or fuel container where there is an open flame, spark, or pilot light, such as on a water heater or on other appliances.
- Do not fill containers inside a vehicle or on a truck or trailer bed with a plastic liner. Always place containers on the ground, away from your vehicle before filling.
- Remove the equipment from the truck or trailer and refuel it while it is on the ground. If this is not possible, then refuel from a portable container rather than a fuel-dispenser nozzle.
- Do not operate the machine without the entire exhaust system in place and in proper working condition.
- Keep the fuel-dispenser nozzle in contact with the rim of the fuel tank or container opening at all times until fueling is complete. Do not use a nozzle lock-open device.
- If you spill fuel on your clothing, change your clothing immediately. Wipe up any fuel that spills.
- Never overfill the fuel tank. Replace the fuel cap and tighten it securely.
- Store fuel in an approved container and keep it out of the reach of children. Never buy more than a 30-day supply of fuel.
- Do not fill the fuel tank completely full. Add fuel to the fuel tank until the level is 6 to 13 mm (1/4 to 1/2 inch) below the bottom of the filler neck. This empty space in the tank allows fuel to expand.
  - Avoid prolonged breathing of vapors.
  - Keep your face away from the nozzle and fuel tank opening.
  - Avoid contact with skin; wash off spills with soap and water.

Adding Fuel

Recommended Fuel

- For best results, use only clean, fresh (less than 30 days old), unleaded gasoline with an octane rating of 87 or higher ((R+M)/2 rating method).
- **Ethanol**: Gasoline with up to 10% ethanol (gasohol) or 15% MTBE (methyl tertiary butyl ether) by volume is acceptable. Ethanol and MTBE are not the same. Gasoline with 15% ethanol (E15) by volume is not approved for use. **Never use gasoline that contains more than 10% ethanol by volume**, such as E15 (contains 15% ethanol), E20 (contains 20% ethanol), or E85 (contains up to 85% ethanol). Using unapproved gasoline may cause performance problems and/or engine damage which may not be covered under warranty.
- **Do not** use gasoline containing methanol.
- **Do not** store fuel either in the fuel tank or fuel containers over the winter unless you use a fuel stabilizer.
- **Do not** add oil to gasoline.

Using Stabilizer/Conditioner

Use a fuel stabilizer/conditioner in the machine to provide the following benefits:

- Keeps fuel fresh during storage of 90 days or less (drain the fuel tank when storing the machine for more than 90 days)
- Cleans the engine while it runs
- Eliminates gum-like varnish buildup in the fuel system, which causes hard starting

Important: **Do not use fuel additives containing methanol or ethanol.**

Add the correct amount of fuel stabilizer/conditioner to the fuel.

Note: A fuel stabilizer/conditioner is most effective when mixed with fresh fuel. To minimize the chance of varnish deposits in the fuel system, use fuel stabilizer at all times.

Filling the Fuel Tank

1. Park the machine on a level surface.
2. Engage the parking brake.
3. Shut off the engine and remove the key.
4. Clean around the fuel-tank cap.
5. Fill the fuel tank to the bottom of the filler neck (Figure 8).

   Note: Do not fill the fuel tank completely full. The empty space in the tank allows the fuel to expand.

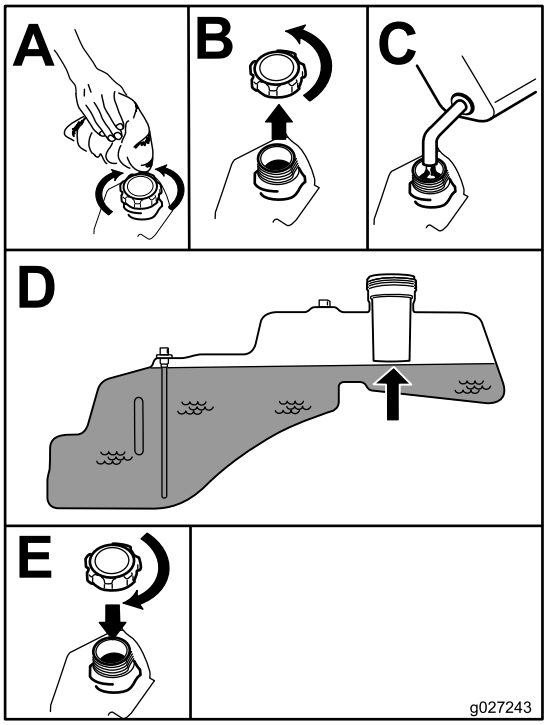

g027243

Figure 8

Performing Daily Maintenance

Before starting the machine each day, perform the Each Use/Daily procedures listed in Maintenance (page 35).

Breaking in a New Machine

New engines take time to develop full power. Mower decks and drive systems have higher friction when new, placing additional load on the engine. Allow 40 to 50 hours of break-in time for new machines to develop full power and best performance.

Using the Safety-Interlock System

⚠ WARNING

If the safety-interlock switches are disconnected or damaged, the machine could operate unexpectedly, causing personal injury.

- **Do not tamper with the interlock switches.**
- **Check the operation of the interlock switches daily and replace any damaged switches before operating the machine.**

Understanding the Safety-Interlock System

The safety-interlock system is designed to prevent the engine from starting unless:

- The blade-control switch (PTO) is disengaged.
- The motion-control levers are in the PARK position.

The safety-interlock system also is designed to shut off the engine whenever the control levers are out of the PARK position and you rise from the seat.

Testing the Safety-Interlock System

Test the safety-interlock system before you use the machine each time. If the safety system does not operate as described below, have an Authorized Service Dealer repair the safety system immediately.

1. Sit on the seat, move the motion-control levers in the PARK position, and move the blade-control switch to the ON position. Try starting the engine; the engine should not crank.
2. Sit on the seat and move the blade-control switch to the OFF position. Move either motion-control lever to the center, unlocked position. Try starting the engine; the engine should not crank. Repeat with the other motion-control lever.
3. Sit on the seat, move the blade-control switch to the OFF position, and lock the motion-control levers in the PARK position. Start the engine. While the engine is running, engage the blade-control switch, and rise slightly from the seat; the engine should shut off.
4. Sit on the seat, move the blade-control switch to the OFF position, and lock the motion-control levers in the PARK position. Start the engine. While the engine is running, move the motion-control levers to the center, unlocked position, engage the blade-control switch, and rise slightly from the seat; the engine should shut off.

Positioning the Seat

The seat can move forward and backward. Position the seat where you have the best control of the machine and are most comfortable (Figure 9).

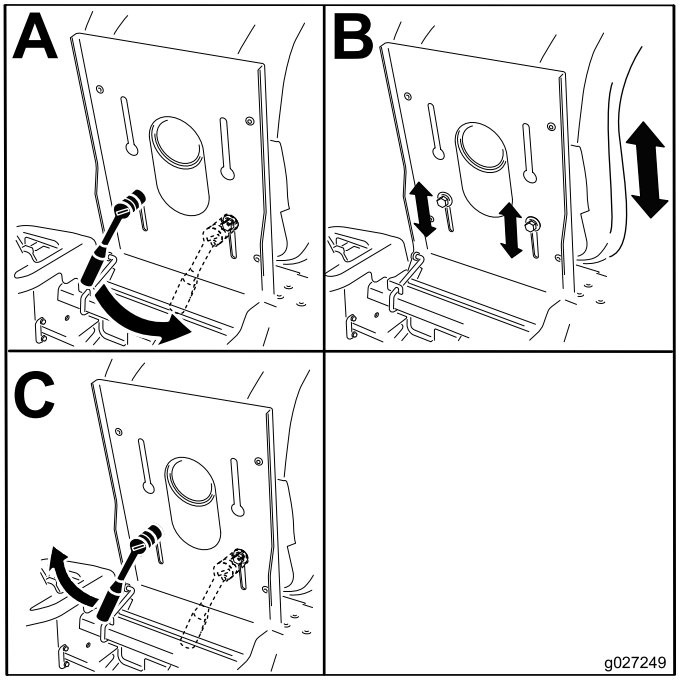

g027249

Figure 9

Adjusting the Motion-Control Levers

Adjusting the Height

You can adjust the motion-control levers higher or lower for maximum comfort (Figure 10).

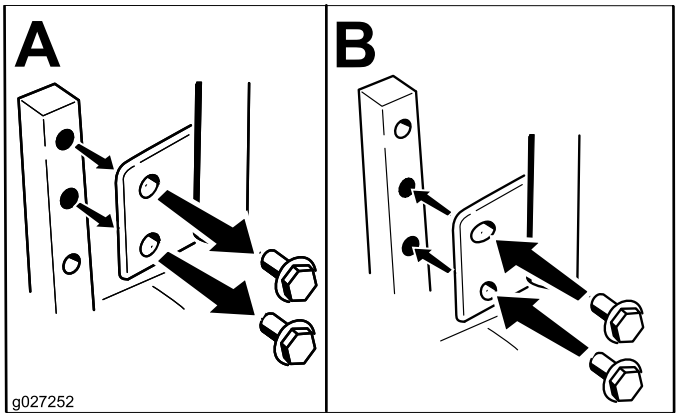

g027252

Figure 10

Adjusting the Tilt

You can adjust the motion-control levers forward or rearward for your comfort.

1. Loosen the upper bolt holding the control lever to the control-arm shaft.
2. Loosen the lower bolt just enough to pivot the control lever forward or rearward (Figure 10).
3. Tighten both bolts to secure the control lever in the new position.
4. Repeat the adjustment for the other control lever.

Converting to Side Discharge

Machines with 107 cm (42-inch) Mower Decks

The mower deck and mower blades shipped with the machine were designed for optimum mulching and side-discharge performance.

Removing the Discharge Cover for Side-Discharging

1. Park the machine on a level surface, disengage the blade-control switch, and engage the parking brake.
2. Shut off the engine, remove the key, and wait for all moving parts to stop before leaving the operating position.
3. Release the flexible latch from the latch retainer on the discharge cover and pivot the discharge cover to the right (Figure 11).

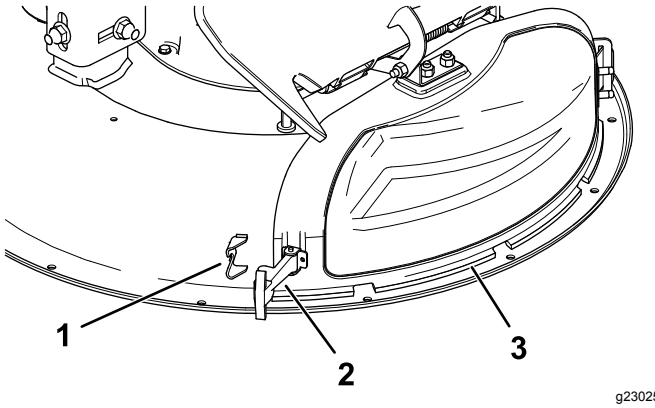

Figure 11

1. Latch retainer
2. Latch
3. Discharge cover

4. Release the hook-shaped latch on top of the discharge cover from the pivot rod (Figure 15).
5. Angle the metal tab on the discharge cover out of the slot in the bracket welded to the mower deck (Figure 12).

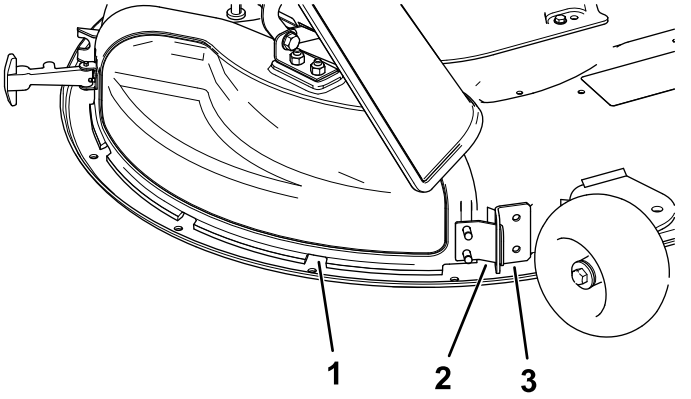

Figure 12

1. Discharge cover
2. Metal tab
3. Bracket on the mower deck

Installing the Discharge Cover for Mulching

1. Park the machine on a level surface, disengage the blade-control switch, and engage the parking brake.
2. Shut off the engine, remove the key, and wait for all moving parts to stop before leaving the operating position.
3. Angle the metal tab on the discharge cover into the slot in the bracket welded to the mower deck (Figure 13).

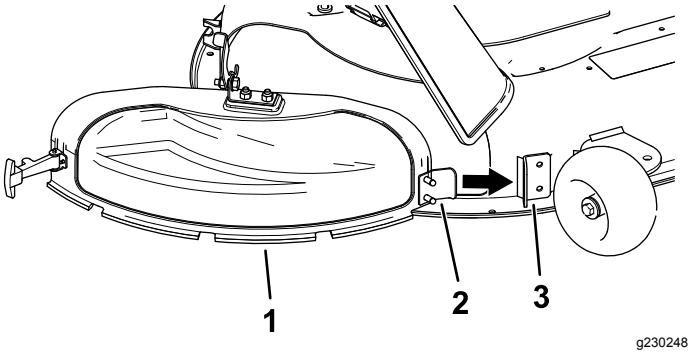

Figure 13

1. Discharge cover
2. Metal tab
3. Bracket on the mower deck

4. Pivot the discharge cover back and toward the deck so that the discharge cover aligns with the mower deck (Figure 14).

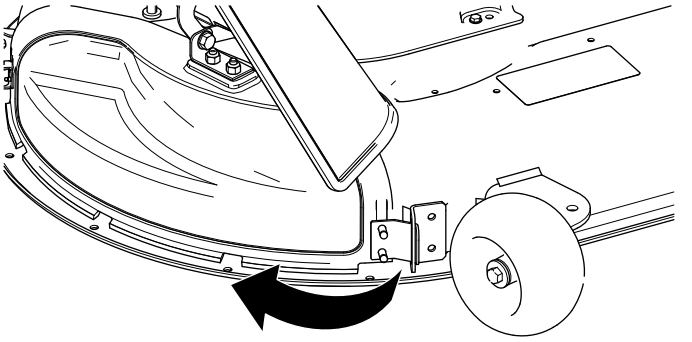

Figure 14

5. On the top of the discharge cover, engage the hook-shaped latch around the pivot rod of the deflector assembly (Figure 15).

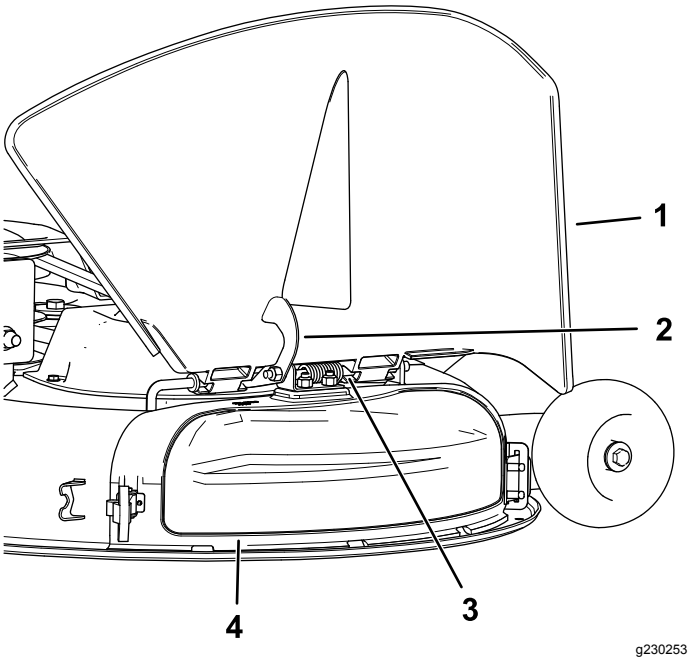

Figure 15

1. Deflector
2. Latch
3. Pivot rod
4. Discharge cover

6. Secure the discharge cover to the deck by hooking the flexible latch on the discharge cover into the retainer on the deck (Figure 11).

Machines with 127 cm (50-inch) Mower Decks

The mower deck and mower blades shipped with the machine were designed for optimum mulching and side-discharge performance.

Removing the Right Baffle for Side-Discharging

1. Park the machine on a level surface, disengage the blade-control switch, and engage the parking brake.
2. Shut off the engine, remove the key, and wait for all moving parts to stop before leaving the operating position.
3. Remove the right mower blade; refer to Removing the Blades (page 50).
4. Remove the 2 knobs and curved washers that secure the right baffle to the mower (Figure 16).

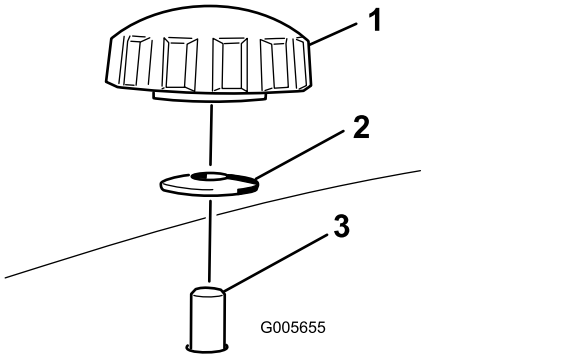

g005655

Figure 16

1. Knob
2. Curved washer
3. Baffle stud coming through the mower

5. Remove the right baffle and lower the grass deflector over the discharge opening as shown in Figure 16 and Figure 17.

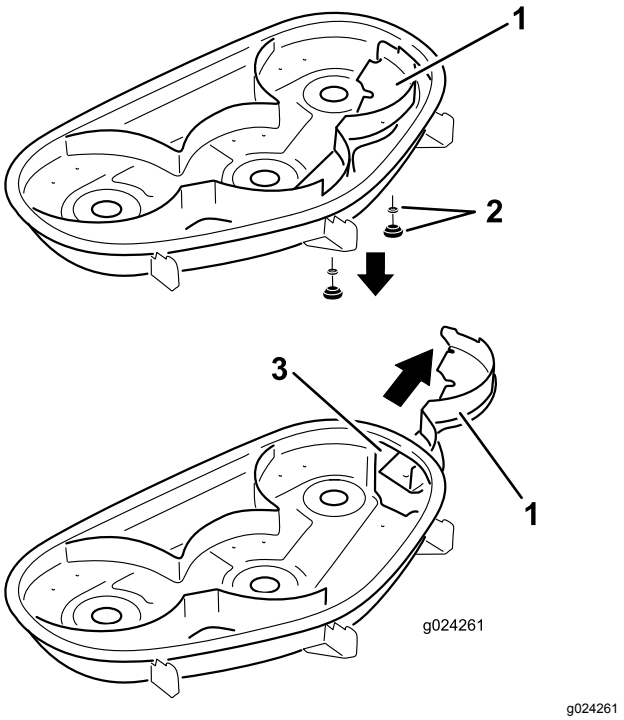

g024261

Figure 17

1. Right baffle
2. Curved washer and knob
3. Discharge opening

6. Install fasteners into the holes in the top of the mower to prevent flying debris.

⚠ WARNING

Open holes in the machine expose you and others to thrown debris that can cause severe injury.

- **Never operate the machine without hardware mounted in all holes in the machine housing.**
- **Install the hardware in the mounting holes when you remove the mulching baffle.**

7. Install the right mower blade; refer to Installing the Blades (page 51).
8. Lift up the grass deflector. Install 2 bolts (5/16 x 3/4 inch) to the 2 holes along the deck cutout.
9. Install the cutoff baffle to the mower deck (Figure 18).

Note: Use the 2 locknuts (5/16 inch) to secure the baffle to the mower deck.

Note: The cutoff baffle was shipped with the machine as a loose part.

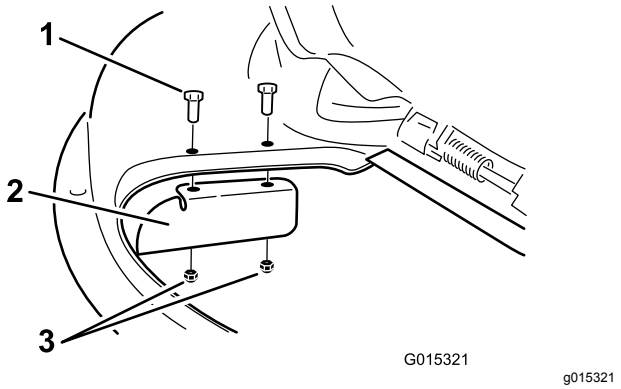

Figure 18

1. Bolt (5/16 x 3/4 inch)
2. Cutoff baffle
3. Locknut (5/16 inch)

10. Torque the fasteners to 7 to 9 N·m (14 to 18 ft-lb).
11. Lower the grass deflector over the discharge opening.

Important: **Ensure that the mower has a hinged grass deflector that disperses clippings to the side and down toward the turf while in side-discharge mode.**

Installing the Right Baffle for Mulching

1. Park the machine on a level surface, disengage the blade-control switch, and engage the parking brake.
2. Shut off the engine, remove the key, and wait for all moving parts to stop before leaving the operating position.
3. Remove the cutoff baffle from the mower deck (Figure 18).
4. Remove the right mower blade; refer to Removing the Blades (page 50).
5. Slide the right baffle under the mower deck, and secure it using 2 knobs and the curved washers (cupped side facing the mower) as shown in Figure 16 and Figure 17.

   Important: **Ensure that the tab on the far right side of the right baffle is outside of the mower and is flush with the mower wall.**
6. Install the right mower blade; refer to Installing the Blades (page 51).

During Operation

During Operation Safety

General Safety

- The owner/operator can prevent and is responsible for accidents that may cause personal injury or property damage.
- Wear appropriate clothing, including eye protection; long pants; slip-resistant, substantial footwear; and hearing protection. Tie back long hair and do not wear jewelry.
- Do not operate the machine while ill, tired, or under the influence of alcohol or drugs.
- Never carry passengers on the machine and keep bystanders and pets away from the machine during operation.
- Operate the machine only in good visibility to avoid holes or hidden hazards.
- Avoid mowing on wet grass. Reduced traction could cause the machine to slide.
- Ensure that all drives are in neutral, the parking brake is engaged, and you are in the operating position before you start the engine.
- Keep your hands and feet away from the cutting units. Keep clear of the discharge opening at all times.
- Look behind and down before backing up to be sure of a clear path.
- Use care when approaching blind corners, shrubs, trees, or other objects that may obscure your vision.
- Do not mow near drop-offs, ditches, or embankments. The machine could suddenly roll over if a wheel goes over the edge or if the edge gives way.
- Stop the blades whenever you are not mowing.
- Stop the machine and inspect the blades after striking an object or if there is an abnormal vibration in the machine. Make all necessary repairs before resuming operation.
- Slow down and use caution when making turns and crossing roads and sidewalks with the machine. Always yield the right-of-way.
- Disengage the drive to the cutting unit and shut off the engine before adjusting the height of cut (unless you can adjust it from the operating position).
- Never run an engine in an area where exhaust gases are enclosed.
- Never leave a running machine unattended.

- Before leaving the operating position (including to empty the catchers or to unclog the chute), do the following:
  - Stop the machine on level ground.
  - Disengage the power take-off and lower the attachments.
  - Engage the parking brake.
  - Shut off the engine and remove the key.
  - Wait for all moving parts to stop.
- Do not operate the machine when there is the risk of lightning.
- Do not use the machine as a towing vehicle unless it has a hitch installed.
- Do not change the governor speed or overspeed the engine.
- Use only accessories and attachments approved by Toro.
- This machine produces sound levels in excess of 85 dBA at the operator's ear and can cause hearing loss through extended periods of exposure.

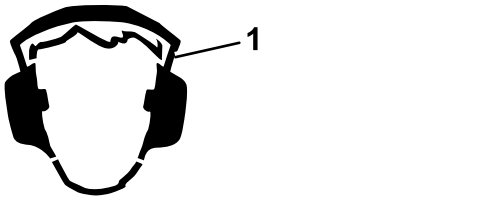

g229846

Figure 19

1. Wear hearing protection.

Slope Safety

- Slopes are a major factor related to loss of control and rollover accidents, which can result in severe injury or death. The operator is responsible for safe slope operation. Operating the machine on any slope requires extra caution. Before using the machine on a slope, do the following:
  - Review and understand the slope instructions in the manual and on the machine.
  - Use an angle indicator to determine the approximate slope angle of the area.
  - Never operate on slopes greater than 15 degrees.
  - Evaluate the site conditions of the day to determine if the slope is safe for machine operation. Use common sense and good judgment when performing this evaluation. Changes in the terrain, such as moisture, can quickly affect the operation of the machine on a slope.
- Identify hazards at the base of the slope. Do not operate the machine near drop-offs, ditches, embankments, water, or other hazards. The machine could suddenly roll over if a wheel goes over the edge or the edge collapses. Keep a safe distance (twice the width of the machine) between the machine and any hazard. Use a walk-behind machine or a hand trimmer to mow the grass in these areas.
- Avoid starting, stopping, or turning the machine on slopes. Avoid making sudden changes in speed or direction; turn slowly and gradually.
- Do not operate a machine under any conditions where traction, steering, or stability is in question. Be aware that operating the machine on wet grass, across slopes, or downhill may cause the machine to lose traction. Loss of traction to the drive wheels may result in sliding and a loss of braking and steering. The machine can slide even if the drive wheels are stopped.
- Remove or mark obstacles such as ditches, holes, ruts, bumps, rocks, or other hidden hazards. Tall grass can hide obstacles. Uneven terrain could overturn the machine.
- Use extra care while operating with accessories or attachments, such as grass-collection systems. These can change the stability of the machine and cause a loss of control. Follow directions for counterweights.
- If possible, keep the deck lowered to the ground while operating on slopes. Raising the deck while operating on slopes can cause the machine to become unstable.

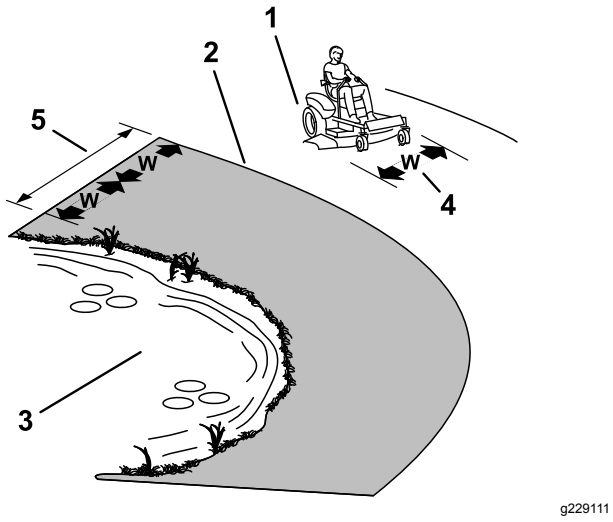

Figure 20

1. Safe Zone—use the machine here on slopes less than 15 degrees or flat areas.
2. Danger Zone—use a walk-behind mower and/or a hand trimmer on slopes greater than 15 degrees and near drop-offs or water.
3. Water
4. W=width of the machine
5. Keep a safe distance (twice the width of the machine) between the machine and any hazard.

Towing Safety

- Do not attach towed equipment except at the hitch point.
- Follow the attachment manufacturer's recommendation for weight limits for towed equipment and towing on slopes. Towed weight must not exceed the weight of the machine, operator, and ballast. Use counterweights or wheel weights as described in the attachment, or in towing the machine *Operator's Manual*.
- Never allow children or others in or on the towed equipment.
- On slopes, the weight of the towed equipment may cause loss of traction, increased risk of rollover, and loss of control. Reduce the towed weight and slow down.
- The stopping distance increases with the weight of a towed load. Travel slowly and allow extra distance to stop.
- Make wide turns to keep the attachment clear of the machine.

Operating the Mower Blade-Control Switch (PTO)

The blade-control switch (PTO) starts and stops the mower blades and any powered attachments.

Engaging the Blade-Control Switch (PTO)

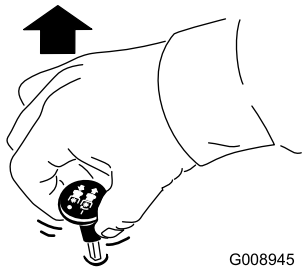

Figure 21

Note: Always engage the blades with the throttle in the FAST position (Figure 22).

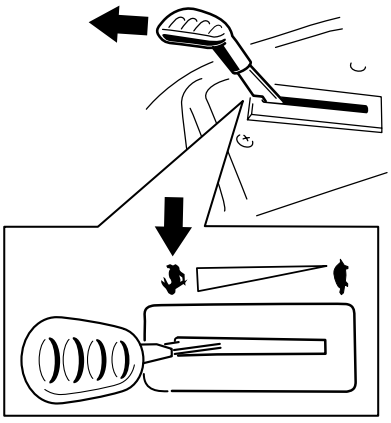

Figure 22

Disengaging the Blade-Control Switch (PTO)

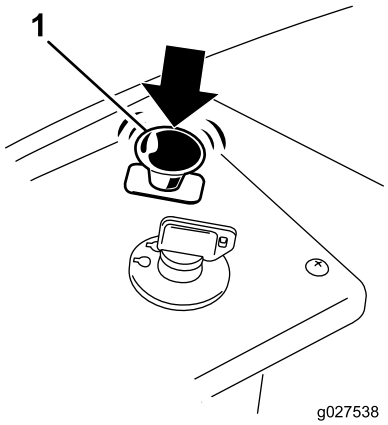

g027538

Figure 23

Operating the Throttle

You can move the throttle control between FAST and SLOW positions (Figure 24).

Always use the FAST position when engaging the PTO.

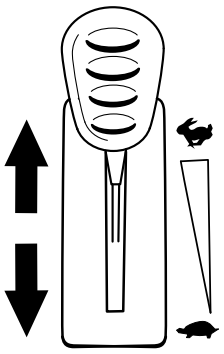

g187517

Figure 24

Operating the Choke

Use the choke to start a cold engine.

1. Pull up the choke knob to engage the choke before using the key switch (Figure 25).

   Note: Ensure that you fully engage the choke. You may need to hold the knob up when you use the key switch.

2. Push down the choke to disengage the choke after the engine has started (Figure 25).

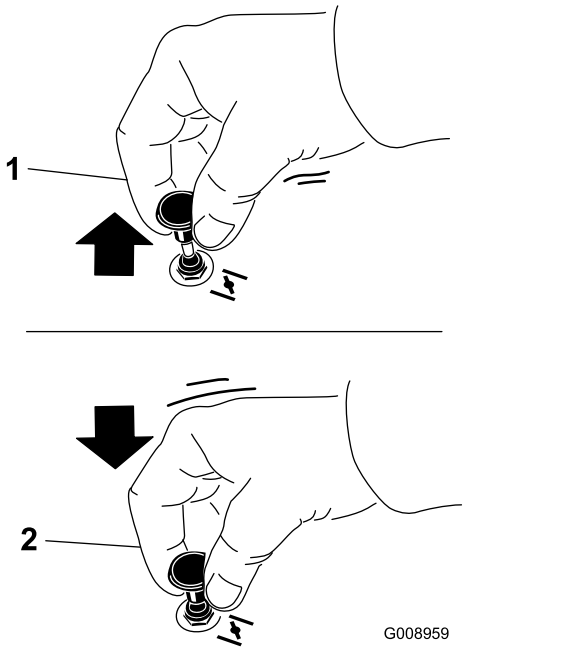

g008959

Figure 25

1. ON position
2. OFF position

Starting the Engine

Note: A warm or hot engine may not require choking.

Important: **Do not engage the starter for more than 5 seconds at a time. Engaging the starter motor for more than 5 seconds can damage the starter motor. If the engine fails to start, wait 10 seconds before operating the engine starter again.**

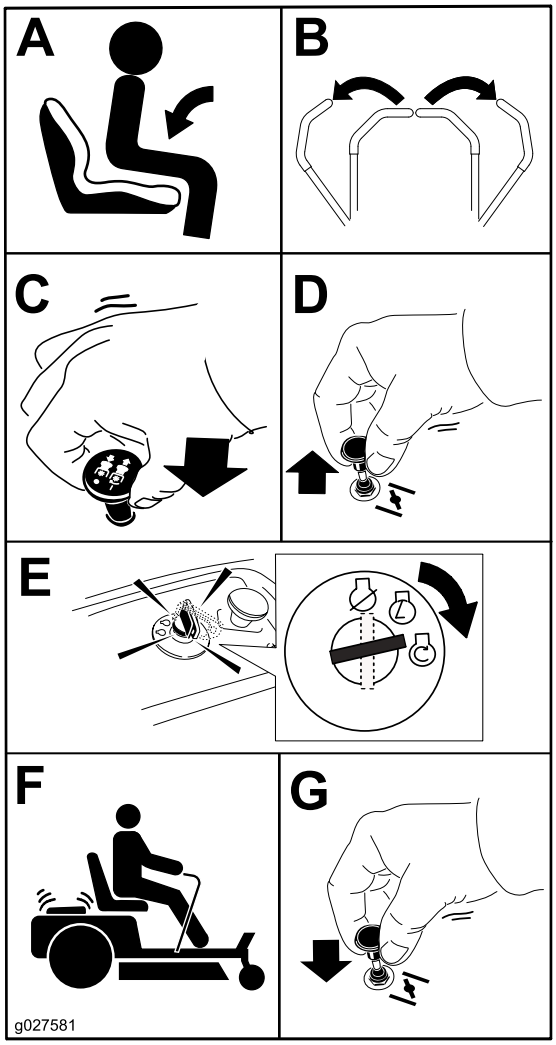

g027581

Figure 26

Shutting Off the Engine

1. Disengage the blades by moving the blade-control switch to the OFF position (Figure 26).
2. Engage the parking brake; refer to Park Position (page 15).
3. Move the throttle control to the FAST position.
4. Turn the key to the OFF position and remove the key.

⚠ CAUTION

Children or bystanders may be injured if they move or attempt to operate the machine while it is unattended.

Always remove the key and engage the parking brake when leaving the machine unattended.

Using the Motion-Control Levers

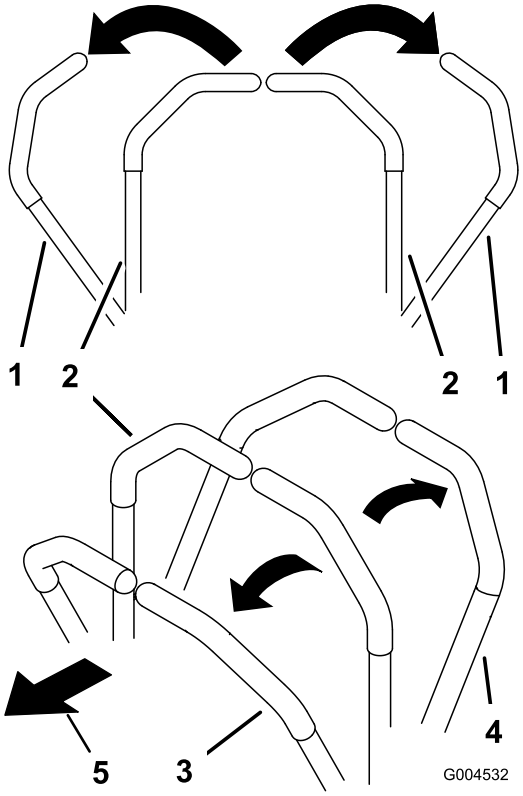

g004532

Figure 27

1. Motion-control lever—PARK position
2. Center, unlocked position
3. Forward
4. Backward
5. Front of machine

Driving the Machine

The drive wheels turn independently, powered by hydraulic motors on each axle. You can turn 1 side in reverse while you turn the other forward, causing the machine to spin rather than turn. This greatly improves the machine maneuverability but may require sometime for you to adapt to how it moves.

The throttle control regulates the engine speed as measured in rpm (revolutions per minute). Place the throttle control in the FAST position for best

performance. Always operate in the full throttle position when mowing.

⚠ WARNING

The machine can spin very rapidly. You may lose control of the machine and cause personal injury or damage to the machine.

- **Use caution when making turns.**
- **Slow the machine down before making sharp turns.**

Driving Forward

Note: Always use caution when backing up and turning.

1. Move the levers to the center, unlocked position.
2. To go forward, slowly push the motion-control levers forward (Figure 28).

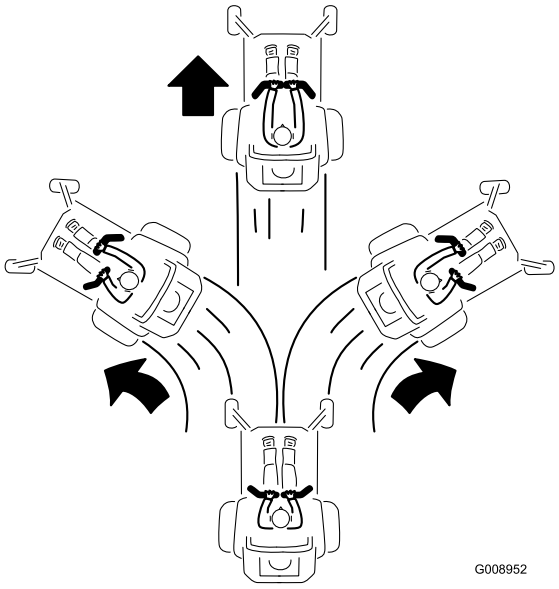

g008952

Figure 28

Driving Backward

1. Move the levers to the center, unlocked position.
2. To go backward, slowly pull the motion-control levers rearward (Figure 29).

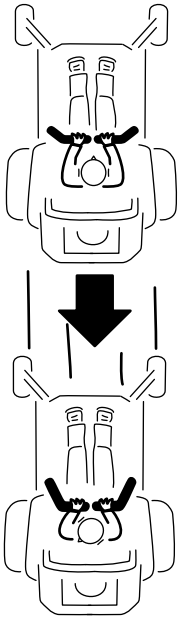

g008953

Figure 29

Using the Smart Speed™ Control System

The Smart Speed ™ Control-System lever, located below the operating position (Figure 30), gives the operator a choice to drive the machine at 3 ground speed ranges—trim, tow, and mow.

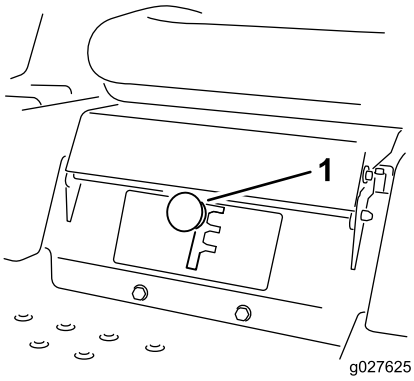

g027625

Figure 30

1. Smart-speed lever

To change speeds, do the following:

1. Move the motion-control levers to neutral and outward to the PARK position.
2. Disengage the blade-control switch.
3. Adjust the lever to the desired position.

The following are only recommendations for use. Adjustments vary by grass type, moisture content, and the height of the grass.

Suggested uses:	Trim	Tow	Mow
Parking	X		
Heavy, wet grass	X		
Training	X		
Bagging		X	
Mulching		X	
Normal mowing			X
Transport			X

Trim

This is the lowest speed. The suggested uses for this speed are as follows:

- Parking
- Heavy, wet grass mowing conditions
- Training

Tow

This is the medium speed. The suggested uses for this speed are as follows:

- Bagging
- Mulching

Mow

This is the fastest speed. The suggested uses for this speed are as follows:

- Normal mowing
- Transporting the machine

Using the Side Discharge

The mower has a hinged grass deflector that disperses clippings to the side and down toward the turf.

⚠ DANGER

Without a grass deflector, discharge cover, or a complete grass-catcher assembly mounted in place, you and others are exposed to blade contact and thrown debris. Contact with rotating mower blade(s) and thrown debris will cause injury or death.

- **Never remove the grass deflector from the mower deck because the grass deflector routes material down toward the turf. If the grass deflector is ever damaged, replace it immediately.**
- **Never put your hands or feet under the mower deck.**
- **Never try to clear the discharge area or mower blades unless you move the blade-control switch (PTO) to the OFF position, rotate the key switch to the OFF position, and remove the key from the key switch.**
- **Make sure that the grass deflector is in the down position.**

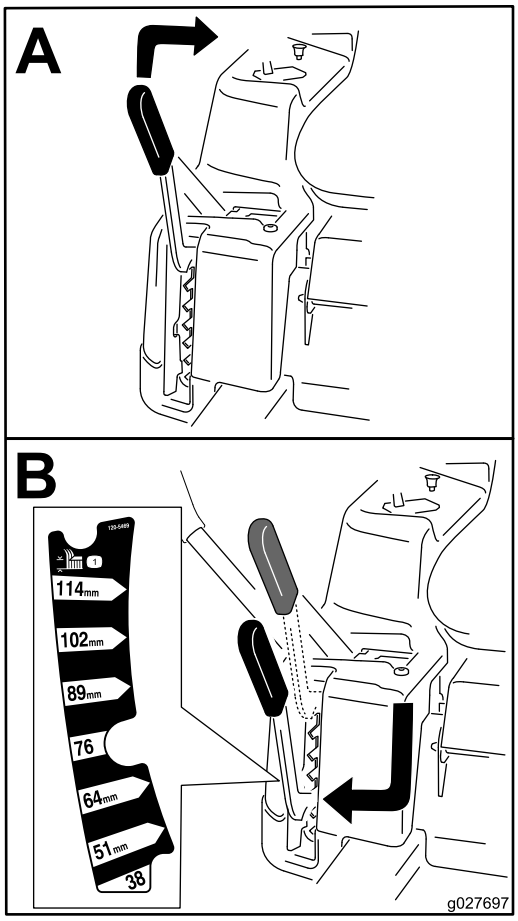

g027697

Figure 31

Adjusting the Height of Cut

Note: The transport position is the highest height-of-cut position or cutting height at 115 mm (4-1/2 inches) as shown in Figure 31.

Height of cut is controlled by the lever located to the right of the operating position (Figure 31).

Adjusting the Anti-Scalp Rollers

Adjusting the Anti-Scalp Rollers

Machines with 107 cm (42-inch) Mower Decks

Whenever you change the height of cut, adjust the height of the anti-scalp rollers.

Note: Adjust the anti-scalp rollers so that the rollers do not touch the ground in normal, flat mowing areas.

1. Park the machine on a level surface, disengage the blade-control switch and engage the parking brake.
2. Shut off the engine, remove the key, and wait for all moving parts to stop before leaving the operating position.
3. Adjust the anti-scalp rollers to 1 of the following positions:
   - Upper hole—use this position with the mower deck in the 63 mm (2-1/2 inches) and below the height-of-cut positions (Figure 32).
   - Lower hole—use this position with the mower deck in the 76 mm (3 inches) and above the height-of-cut positions (Figure 32).

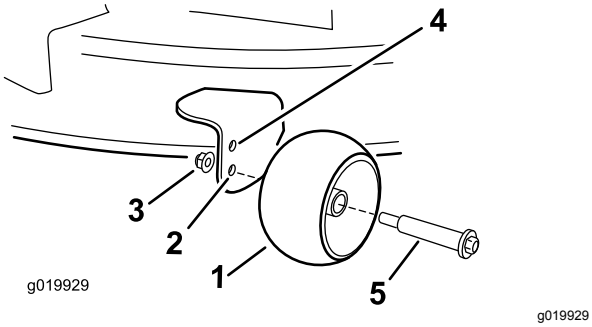

Figure 32

1. Anti-scalp roller
2. Lower hole—the mower deck in the 76 mm (3 inches) and above the height-of-cut positions
3. Flange nut
4. Upper hole—the mower deck in the 63 mm (2-1/2 inches) and below the height-of-cut positions
5. Bolt

Adjusting the Anti-Scalp Rollers

Machines with 127 cm (50-inch) Mower Decks

Whenever you change the height of cut, adjust the height of the anti-scalp rollers.

Note: Adjust the anti-scalp rollers so that the rollers do not touch the ground in normal, flat mowing areas.

1. Park the machine on a level surface, disengage the blade-control switch and engage the parking brake.
2. Shut off the engine, remove the key, and wait for all moving parts to stop before leaving the operating position.
3. Adjust the anti-scalp rollers (Figure 33) to match the closest height-of-cut position.

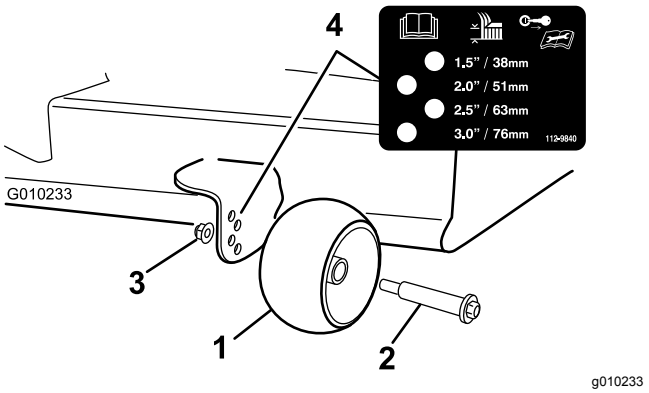

Figure 33

1. Anti-scalp roller
2. Bolt
3. Flange nut
4. Hole spacing

Operating Tips

Using the Fast Throttle Setting

For best mowing and maximum air circulation, operate the engine at the FAST position. Air is required to thoroughly cut grass clippings, so do not set the height-of-cut so low as to totally surround the mower deck in uncut grass. Always try to have 1 side of the mower deck free from uncut grass, which allows air to be drawn into the mower deck.

Cutting a Lawn for the First Time

Cut grass slightly longer than normal to ensure that the cutting height of the mower deck does not scalp any uneven ground. However, the cutting height used in the past is generally the best one to use. When cutting grass longer than 15 cm (6 inches) tall, you may want to cut the lawn twice to ensure an acceptable quality of cut.

Cutting a Third of the Grass Blade

It is best to cut only about a third of the grass blade. Cutting more than that is not recommended unless grass is sparse, or it is late fall when grass grows more slowly.

Alternating the Mowing Direction

Alternate the mowing direction to keep the grass standing straight. This also helps disperse clippings, which enhances decomposition and fertilization.

Mowing at Correct Intervals

Grass grows at different rates at different times of the year. To maintain the same cutting height, mow more often in early spring. As the grass growth rate slows in mid summer, mow less frequently. If you cannot mow for an extended period, first mow at a high cutting height, then mow again 2 days later at a lower height setting.

Using a Slower Cutting Speed

To improve cut quality, use a slower ground speed in certain conditions.

Avoiding Cutting Too Low

When mowing uneven turf, raise the cutting height to avoid scalping the turf.

Stopping the Machine

If you must stop the forward motion of the machine while mowing, a clump of grass clippings may drop onto your lawn. To avoid this, move onto a previously cut area with the blades engaged or you can disengage the mower deck while moving forward.

Keeping the Underside of the Mower Deck Clean

Clean clippings and dirt from the underside of the mower deck after each use. If grass and dirt build up inside the mower deck, cutting quality will eventually become unsatisfactory.

Maintaining the Blade(s)

Maintain a sharp blade throughout the cutting season because a sharp blade cuts cleanly without tearing or shredding the grass blades. Tearing and shredding turns grass brown at the edges, which slows growth and increases the chance of disease. Check the mower blades after each use for sharpness, and for any wear or damage. File down any nicks and sharpen the blades as necessary. If a blade is damaged or worn, replace it immediately with a genuine Toro replacement blade.

After Operation

After Operation Safety

General Safety

- Clean grass and debris from the cutting units, mufflers, and engine compartment to help prevent fires. Clean up oil or fuel spills.
- Shut off the fuel before storing or transporting the machine.
- Disengage the drive to the attachment whenever you are transporting or not using the machine.
- Allow the engine to cool before storing the machine in any enclosure.
- Never store the machine or fuel container where there is an open flame, spark, or pilot light, such as on a water heater or on other appliances.

Pushing the Machine by Hand

Important: **Always push the machine by hand. Do not tow the machine, because towing may damage it.**

This machine has an electric-brake mechanism, and to push the machine, the ignition key must be in the RUN position. The battery needs to be charged and functioning to disengage the electric brake.

Pushing the Machine

1. Park the machine on a level surface, disengage the blade-control switch, and engage the parking brake.
2. Shut off the engine, remove the key, and wait for all moving parts to stop before leaving the operating position.
3. Locate the bypass levers on the frame on both sides of the engine.
4. Move the bypass levers forward through the key hole and down to lock them in place (Figure 34).

   Note: Do this for each lever.
5. Turn the ignition key on and disengage the parking brake.

   Note: Do not start the machine.

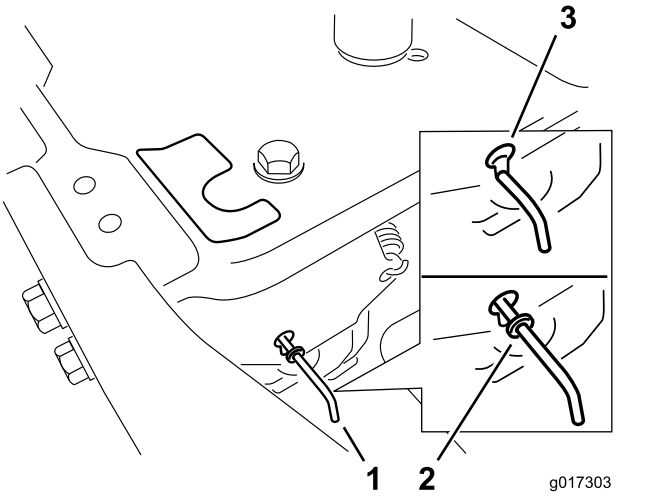

Figure 34

1. Bypass-lever locations
2. Lever position for operating the machine
3. Lever position for pushing the machine

6. When finished, ensure that the key has been returned to the STOP position to avoid draining the battery charge.

Note: If the machine fails to move, the electric brake may still be engaged. You can release the electric brake manually if necessary; refer to Releasing the Electric Brake (page 46).

Operating the Machine

Move the bypass levers rearward through the keyhole and down to lock them in place as shown in Figure 34.

Note: Do this for each lever.

Transporting the Machine

Use a heavy-duty trailer or truck to transport the machine. Use a full-width ramp. Ensure that the trailer or truck has all the necessary brakes, lighting, and marking as required by law. Please carefully read all the safety instructions. Knowing this information could help you or bystanders avoid injury. Refer to your local ordinances for trailer and tie-down requirements.

⚠ WARNING

Driving on the street or roadway without turn signals, lights, reflective markings, or a slow-moving-vehicle emblem is dangerous and can lead to accidents, causing personal injury.

Do not drive the machine on a public street or roadway.

Selecting a Trailer

⚠ WARNING

Loading a machine onto a trailer or truck increases the possibility of tip-over and could cause serious injury or death (Figure 35).

- **Use only a full-width ramp; do not use individual ramps for each side of the machine.**
- **Do not exceed a 15-degree angle between the ramp and the ground or between the ramp and the trailer or truck.**
- **Ensure that the length of ramp is at least 4 times as long as the height of the trailer or truck bed to the ground. This ensures that ramp angle does not exceed 15 degrees on flat ground.**

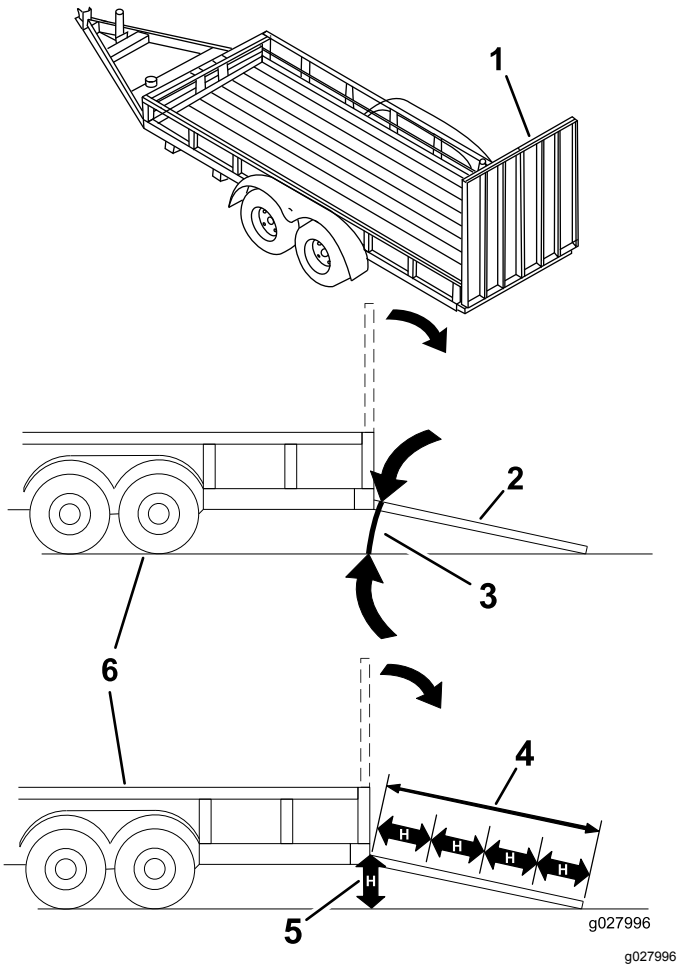

Figure 35

1. Full-width ramp in stowed position
2. Side view of full-width ramp in loading position
3. Not greater than 15 degrees
4. Ramp is at least 4 times as long as the height of the trailer or truck bed to the ground
5. H=height of the trailer or truck bed to the ground
6. Trailer

Loading the Machine

⚠ WARNING

Loading a machine onto a trailer or truck increases the possibility of tip-over and could cause serious injury or death.

- **Use extreme caution when operating a machine on a ramp.**
- **Back the machine up the ramp and drive it forward down the ramp.**
- **Avoid sudden acceleration or deceleration while driving the machine on a ramp as this could cause a loss of control or a tip-over situation.**

1. If using a trailer, connect it to the towing vehicle and connect the safety chains.
2. If applicable, connect the trailer brakes and lights.
3. Lower the ramp, ensuring that the angle between the ramp and the ground does not exceed 15 degrees (Figure 35).
4. Back the machine up the ramp (Figure 36).

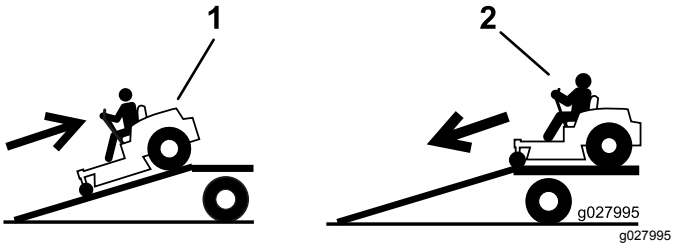

Figure 36

1. Back the machine up the ramp.
2. Drive the machine forward down the ramp.

5. Shut off the engine, remove the key, and engage the parking brake.
6. Tie down the machine near the front caster wheels and the rear bumper with straps, chains, cable, or ropes (Figure 37). Refer to local regulations for tie-down requirements.

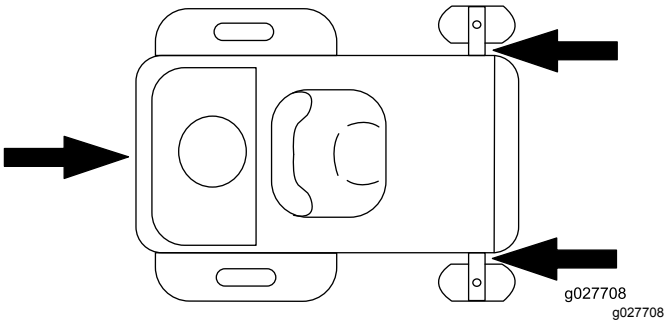

Figure 37

Unloading the Machine

1. Lower the ramp, ensuring that the angle between the ramp and the ground does not exceed 15 degrees (Figure 35).
2. Drive the machine forward down the ramp (Figure 36).

Maintenance

Note: Determine the left and right sides of the machine from the normal operating position.

Recommended Maintenance Schedule(s)

Maintenance Service Interval	Maintenance Procedure
After the first 5 hours	• Change the engine oil and filter.
Before each use or daily	• Check the safety-interlock system. • Check the air cleaner for dirty, loose, or damaged parts. • Check the engine-oil level. • Clean the air intake screen. • Inspect the blades. • Inspect the grass deflector for damage.
After each use	• Clean the mower-deck housing.
Every 25 hours	• Grease all the lubrication points. • Clean the air-cleaner foam element (more often in dusty, dirty conditions). • Check tire pressure.
Every 100 hours	• Replace the air-cleaner foam element (more often in dusty, dirty conditions). • Clean the paper air-cleaner element (more often in dirty or dusty conditions). • Change the engine oil and oil filter (more often in dirty or dusty conditions). • Check the spark plug(s). • Check the in-line fuel filter.
Every 200 hours	• Replace the paper air-cleaner element (more often in dirty or dusty conditions). • Replace the spark plug(s). • Replace the in-line fuel filter.
Before storage	• Charge the battery and disconnect the battery cables. • Perform all maintenance procedures listed above before storage. • Paint any chipped surfaces.

⚠ CAUTION

If you leave the key in the switch, someone could accidently start the engine and seriously injure you or other bystanders.

Remove the key from the switch before you perform any maintenance.

Pre-Maintenance Procedures

Maintenance Safety

- Before repairing the machine do the following:
  - Disengage the drives.
  - Engage the parking brake.
  - Shut off the engine and remove the key.
  - Disconnect the spark-plug wire.
- Park the machine on a level surface.
- Clean grass and debris from the cutting unit, drives, mufflers, and engine to help prevent fires.
- Clean up oil or fuel spills.
- Do not allow untrained personnel to service the machine.
- Use jack stands to support the machine and/or components when required.
- Carefully release pressure from components with stored energy.
- Disconnect the battery or remove the spark-plug wire before making any repairs. Disconnect the negative terminal first and the positive terminal last. Connect the positive terminal first and negative last.
- Use care when checking the blades. Wrap the blade(s) or wear thickly padded gloves, and use caution when servicing them. Only replace blades; do not straighten or weld them.
- Keep your hands and feet away from moving parts. If possible, do not make adjustments with the engine running.
- Keep all parts in good working condition and all hardware tightened, especially the blade-attachment bolts. Replace all worn or damaged decals.
- Never interfere with the intended function of a safety device or reduce the protection provided by a safety device. Check their proper operation regularly.
- To ensure optimum performance and continued safety certification of the machine, use only genuine Toro replacement parts and accessories. Replacement parts and accessories made by other manufacturers could be dangerous, and such use could void the product warranty.
- Check the parking brake operation frequently. Adjust and service as required.

Raising the Seat

Ensure that the parking brake is engaged. Lift the seat forward.

You can access following components by raising the seat:

- Serial plate
- Service decal
- Seat-adjustment bolts (if applicable)
- Fuel filter
- Battery and battery cables

Releasing the Mower-Deck Curtain

Loosen the 2 bottom bolts of the curtain to access the top of the mower deck (Figure 38).

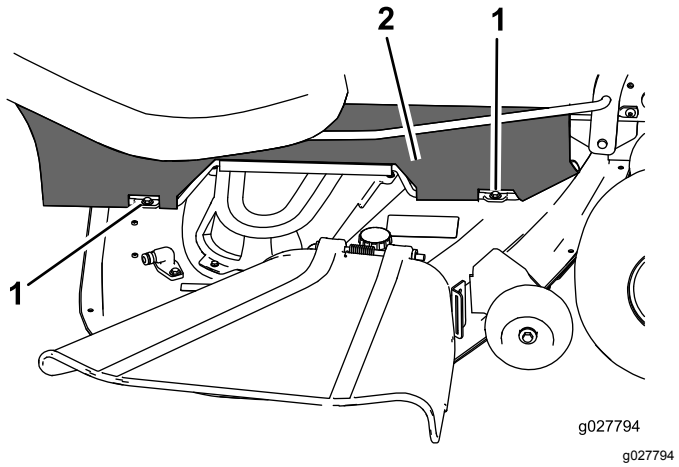

Figure 38

1. Bottom bolt
2. Curtain

Note: Always tighten the bolts to connect the curtain after maintenance.

Lubrication

Greasing the Bearings

Service Interval: Every 25 hours—Grease all the lubrication points.

Grease Type: No. 2 lithium grease

1. Park the machine on a level surface, disengage the blade-control switch, and engage the parking brake; refer to Park Position (page 15).
2. Shut off the engine, remove the key, and wait for all moving parts to stop before leaving the operating position.
3. Clean the grease fittings (Figure 39 and Figure 40) with a rag.

   Note: Scrape any paint off the front of the fitting(s).

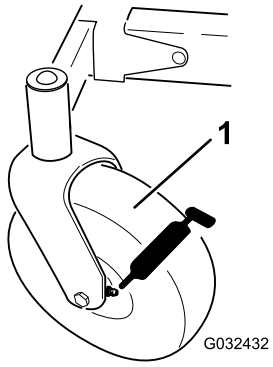

g032432

Figure 39

1. Front caster tire

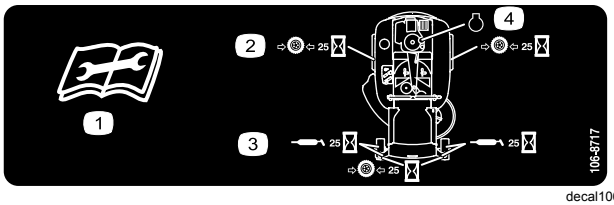

decal106-8717

Figure 40

Located on the seat-pan underside

1. Read the instructions before servicing or performing maintenance
2. Check the tire pressure every 25 operating hours
3. Grease every 25 operating hours
4. Engine

4. Connect a grease gun to each fitting (Figure 39 and Figure 40).
5. Pump grease into the fittings until grease begins to ooze out of the bearings.
6. Wipe up any excess grease.

Engine Maintenance

Engine Safety

- Shut off the engine before checking the oil or adding oil to the crankcase.
- Keep your hands, feet, face, clothing, and other body parts away the muffler and other hot surfaces.

Servicing the Air Cleaner

Service Interval: Before each use or daily

Note: Service the air cleaner more frequently (every few hours) if operating conditions are extremely dusty or sandy.

Removing the Foam and Paper Elements

1. Park the machine on a level surface, disengage the blade-control switch (PTO), and engage the parking brake.
2. Shut off the engine, remove the key, and wait for all moving parts to stop before leaving the operating position.
3. Clean around the air-cleaner cover to prevent dirt from getting into the engine and causing damage.
4. Lift the cover and rotate the air-cleaner assembly out of the engine (Figure 41).

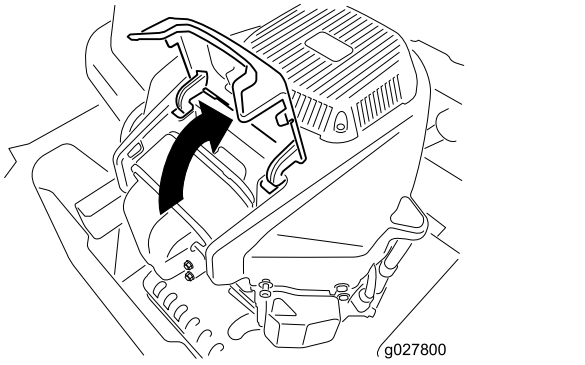

g027800

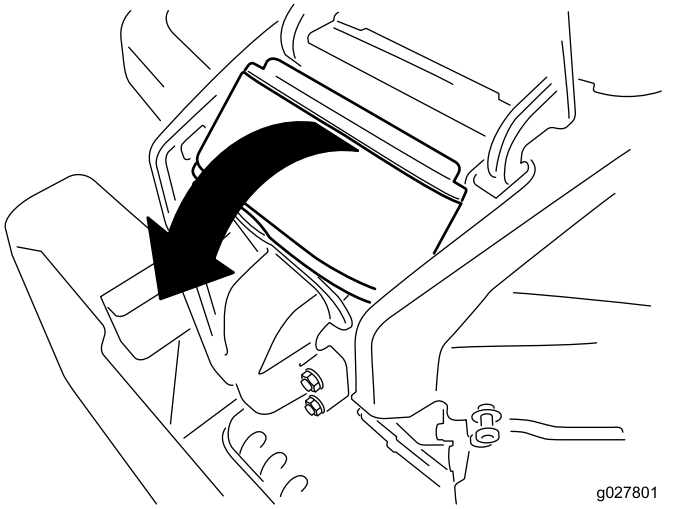

g027801

Figure 41

5. Separate the foam and paper elements (Figure 42).

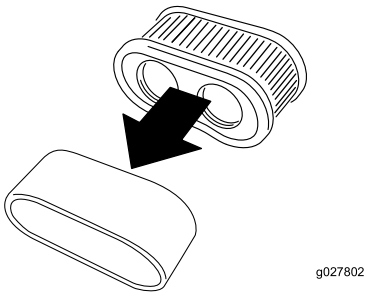

g027802

Figure 42

Servicing the Foam Air-Cleaner Element

Service Interval: Every 25 hours/Monthly (whichever comes first)—Clean the air-cleaner foam element (more often in dusty, dirty conditions).

Every 100 hours/Yearly (whichever comes first)—Replace the air-cleaner foam element (more often in dusty, dirty conditions).

1. Wash the foam element in liquid soap and warm water. When the element is clean, rinse it thoroughly.
2. Dry the element by squeezing it in a clean cloth.

Important: **Replace the foam element if it is torn or worn.**

Servicing the Paper Air-Cleaner Element

Service Interval: Every 100 hours—Clean the paper air-cleaner element (more often in dirty or dusty conditions).

Every 200 hours—Replace the paper air-cleaner element (more often in dirty or dusty conditions).

1. Clean the paper element by tapping it gently to remove dust.

   Note: If it is very dirty, replace the paper element with a new one.
2. Inspect the element for tears, an oily film, or damage to the rubber seal.
3. Replace the paper element if it is damaged.

Important: **Do not clean the paper filter.**

Installing the Air Cleaner

1. Install the foam element over the paper element.

   Note: Ensure that you do not damage the elements.

2. Align the holes of the filter into the manifold ports.
3. Rotate the filter down into the chamber and fully seat it against the manifold (Figure 43).

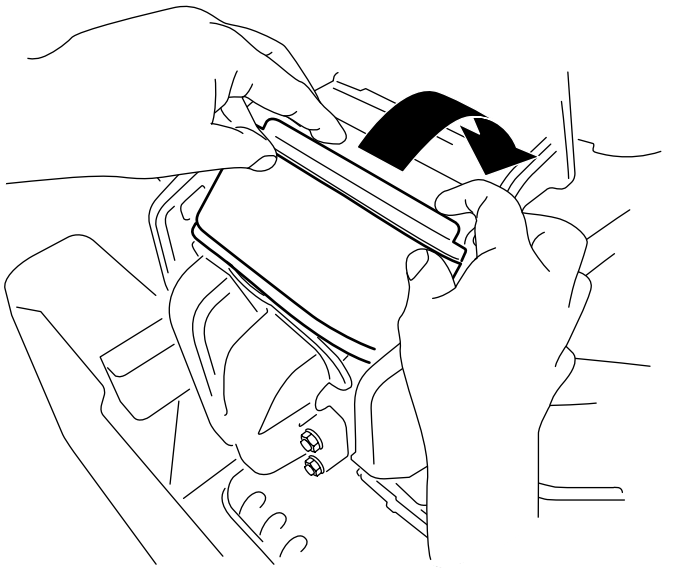

g228022

Figure 43

4. Close the cover.

Servicing the Engine Oil

Engine-Oil Specifications

Oil Type: Detergent oil (API service SF, SG, SH, SJ, or SL)

Crankcase Capacity: 2.4 L (81 fl oz) with oil filter

Viscosity: See the table below.

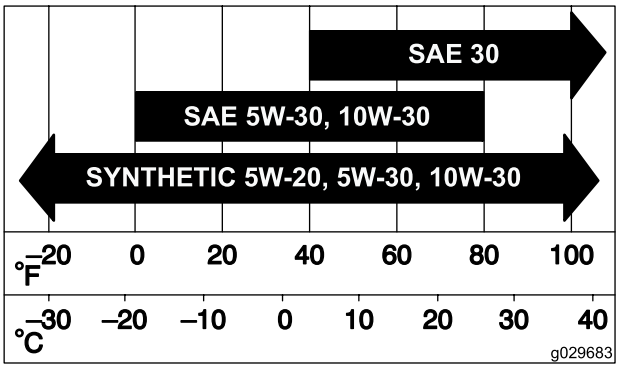

g029683

Figure 44

Checking the Engine-Oil Level

Service Interval: Before each use or daily

Note: Check the oil when the engine is cold.

Important: **If you overfill or underfill the engine crankcase with oil and run the engine, you may damage the engine.**

1. Park the machine on a level surface, disengage the blade-control switch (PTO), and engage the parking brake.
2. Shut off the engine, remove the key, and wait for all moving parts to stop before leaving the operating position.

   Note: Ensure that the engine is cool so that the oil has had time to drain into the sump.

3. To keep dirt, grass clippings, etc., out of the engine, clean the area around the oil-fill cap and dipstick before removing it (Figure 45).

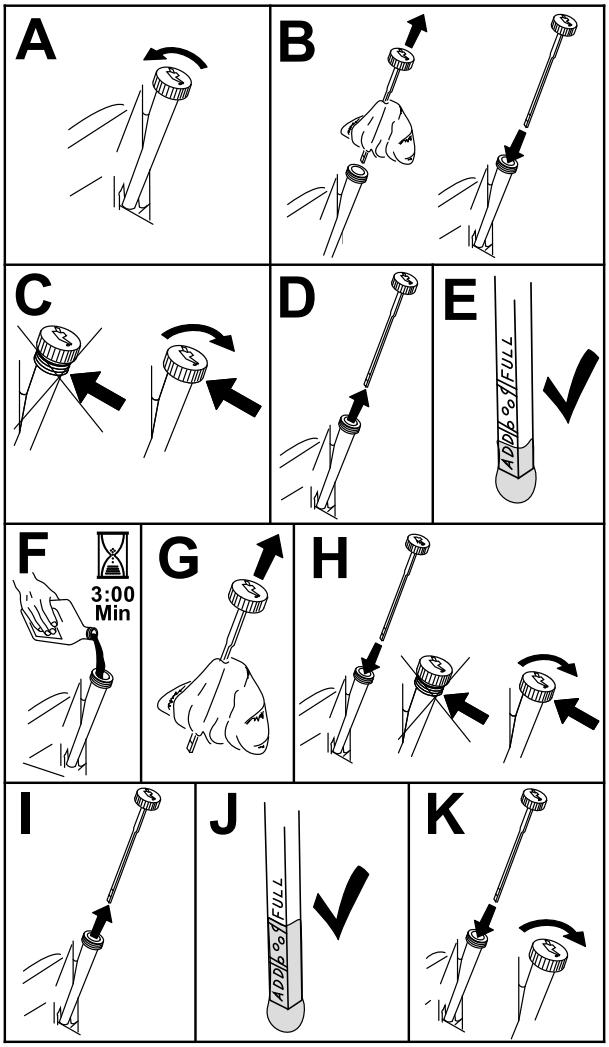

g193541

Figure 45

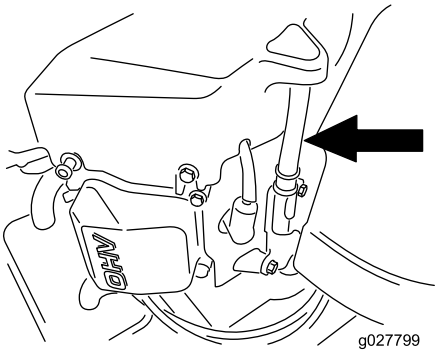

g027799

g027799

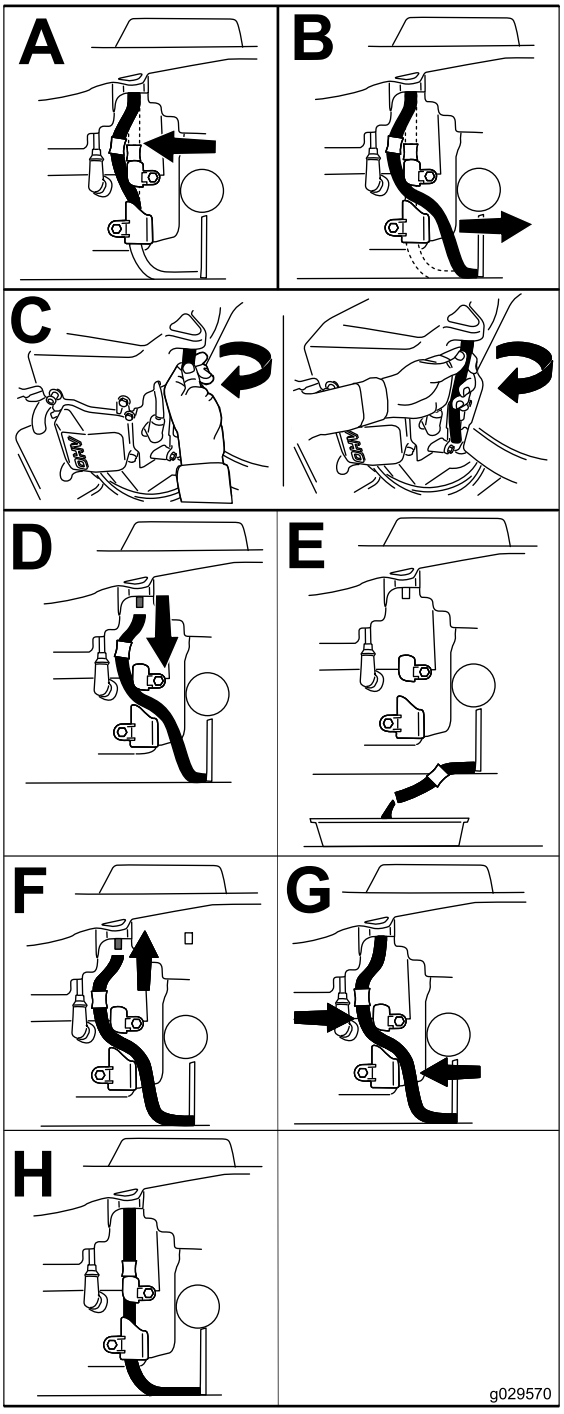

g029570

g029570

Figure 46

Changing the Engine Oil and Oil Filter

Service Interval: After the first 5 hours/After the first month (whichever comes first)—Change the engine oil and filter.

Every 100 hours/Yearly (whichever comes first)—Change the engine oil and oil filter (more often in dirty or dusty conditions).

1. Park the machine on a level surface to ensure that the oil drains completely.
2. Disengage the blade-control switch (PTO) and engage the parking brake.
3. Shut off the engine, remove the key, and wait for all moving parts to stop before leaving the operating position.
4. Drain the oil from the engine.

5. Change the engine-oil filter (Figure 47).

   Note: Ensure that the oil-filter gasket touches the engine and then turn the filter an extra 3/4 turn.

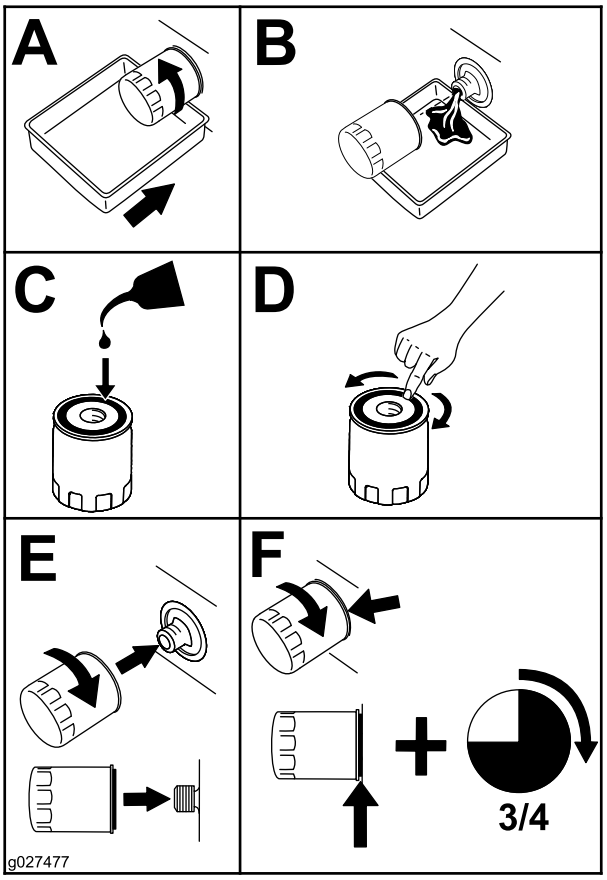

Figure 47

6. Slowly pour approximately 80% of the specified oil into the filler tube and slowly add the additional oil to bring it to the Full mark (Figure 48).

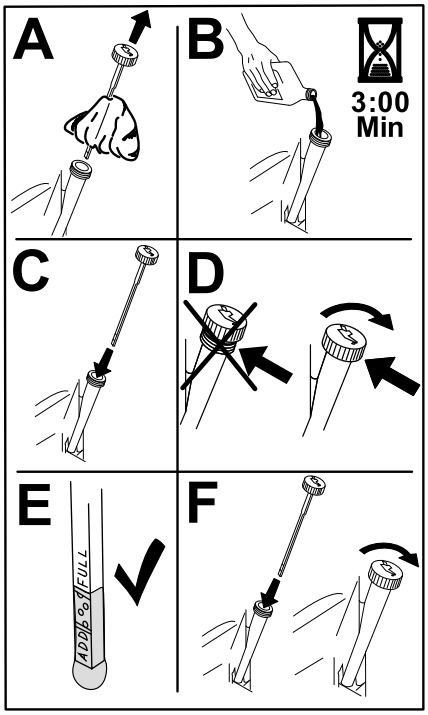

Figure 48

7. Dispose of the used oil at a recycling center.

Servicing the Spark Plug

Service Interval: Every 100 hours/Yearly (whichever comes first)—Check the spark plug(s).

Every 200 hours/Every 2 years (whichever comes first)—Replace the spark plug(s).

Ensure that the air gap between the center and side electrodes is correct before installing the spark plug. Use a spark plug wrench for removing and installing the spark plug and a gapping tool or feeler gauge to check and adjust the air gap. Install a new spark plug if necessary.

Type: Champion® RN9YC or NGK® BPR6ES

Air gap: 0.76 mm (0.03 inch)

Removing the Spark Plug

1. Park the machine on a level surface, disengage the blade-control switch (PTO), and engage the parking brake.
2. Shut off the engine, remove the key, and wait for all moving parts to stop before leaving the operating position.
3. Clean the area around the base of the plug to keep dirt and debris out of the engine.
4. Remove the spark plug (Figure 49).

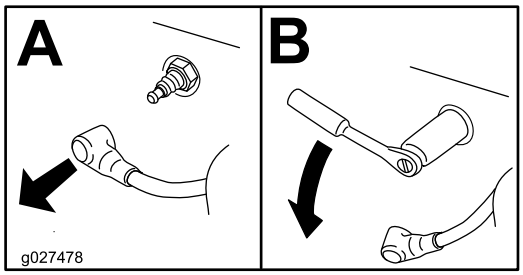

g027478

Figure 49

Checking the Spark Plug

Important: **Do not clean the spark plug(s). Always replace the spark plug(s) when it has a black coating, worn electrodes, an oily film, or cracks.**

If you see light brown or gray on the insulator, the engine is operating properly. A black coating on the insulator usually means the air cleaner is dirty.

Set the gap to 0.75 mm (0.03 inch).

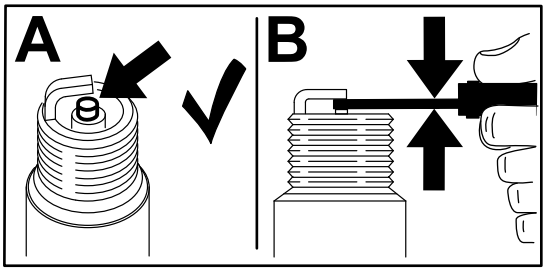

g206628

Figure 50

Installing the Spark Plug

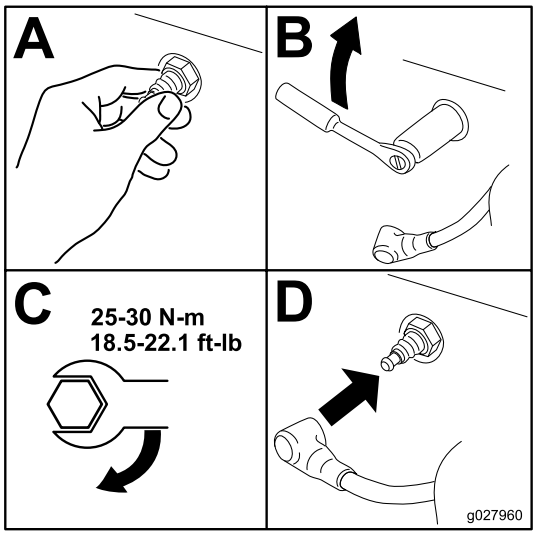

g027960

Figure 51

Cleaning the Cooling System

1. Park the machine on a level surface, disengage the blade-control switch (PTO), and engage the parking brake.
2. Shut off the engine, remove the key, and wait for all moving parts to stop before leaving the operating position.
3. Remove the air filter from the engine.
4. Remove the engine shroud.
5. To prevent debris entering the air intake, install the air filter to the filter base.
6. Clean debris and grass from the parts.
7. Remove the air filter and install the engine shroud.
8. Install the air filter.

Fuel System Maintenance

⚠ DANGER

In certain conditions, fuel is extremely flammable and highly explosive. A fire or explosion from fuel can burn you, others, and can damage property.

- **Perform any fuel-related maintenance when the engine is cold. Do this outdoors in an open area. Wipe up any fuel that spills.**
- **Never smoke when draining fuel, and stay away from an open flame or where a spark may ignite the fuel fumes.**

Replacing the In-Line Fuel Filter

Service Interval: Every 100 hours/Yearly (whichever comes first)—Check the in-line fuel filter.

Every 200 hours/Every 2 years (whichever comes first)—Replace the in-line fuel filter.

Never install a dirty filter after removing it from the fuel line.

1. Park the machine on a level surface, disengage the blade-control switch (PTO), and engage the parking brake.
2. Shut off the engine, remove the key, and wait for all moving parts to stop before leaving the operating position.

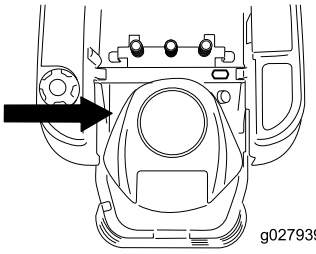

g027939

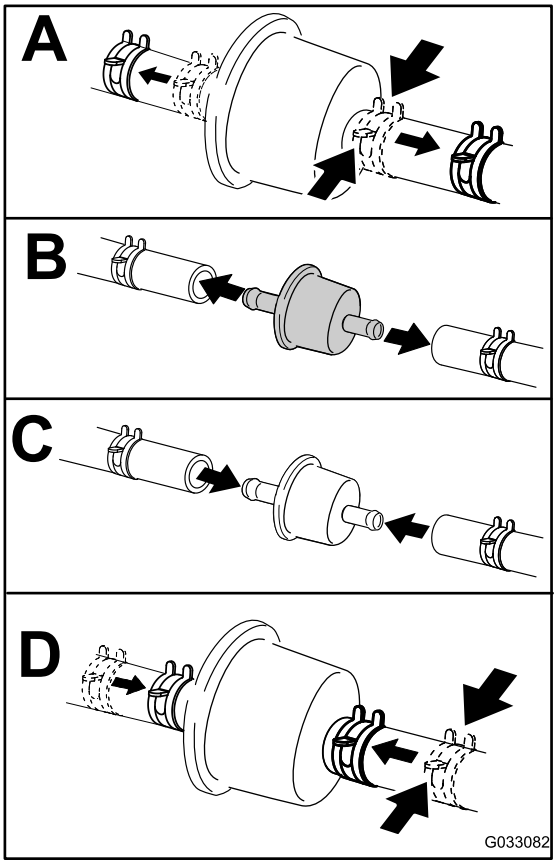

g033082

Figure 52

Electrical System Maintenance

Electrical System Safety

- Disconnect the battery before repairing the machine. Disconnect the negative terminal first and the positive last. Connect the positive terminal first and the negative last.
- Charge the battery in an open, well-ventilated area, away from sparks and flames. Unplug the charger before connecting or disconnecting the battery. Wear protective clothing and use insulated tools.

Servicing the Battery

Removing the Battery

⚠ WARNING

Battery terminals or metal tools could short against metal machine components, causing sparks. Sparks can cause the battery gasses to explode, resulting in personal injury.

- **When removing or installing the battery, do not allow the battery terminals to touch any metal parts of the machine.**
- **Do not allow metal tools to short between the battery terminals and metal parts of the machine.**

1. Park the machine on a level surface, disengage the blade-control switch (PTO), and engage the parking brake.
2. Shut off the engine, remove the key, and wait for all moving parts to stop before leaving the operating position.
3. Raise the seat to access the battery.
4. Disconnect the negative (black) ground cable from the battery post (Figure 53).

   Note: Retain all fasteners.

⚠ WARNING

Incorrectly removing the cables from battery could damage the machine and cables, causing sparks. Sparks can cause the battery gasses to explode, resulting in personal injury.

- **Always disconnect the negative (black) battery cable before disconnecting the positive (red) cable.**
- **Always connect the positive (red) battery cable before connecting the negative (black) cable.**

5. Slide the rubber cover off the positive (red) cable.
6. Disconnect the positive (red) cable from the battery post (Figure 53).

   Note: Retain all fasteners.
7. Remove the battery hold-down (Figure 53), and lift the battery from the battery tray.

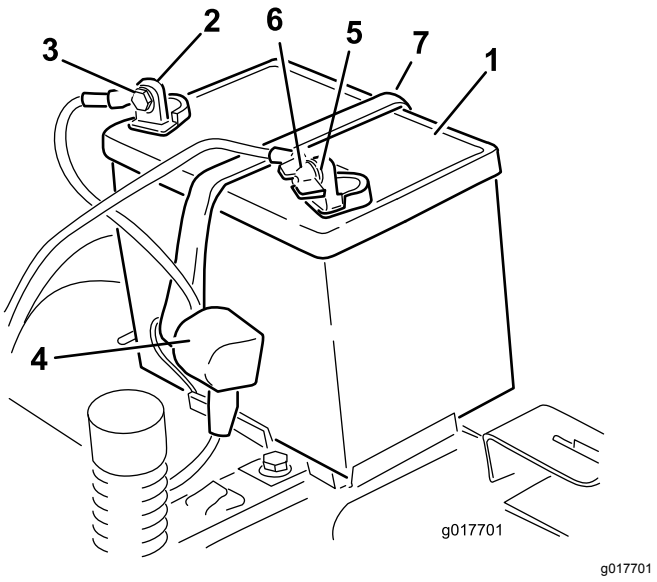

Figure 53

1. Battery
2. Positive (+) battery post
3. Bolt, washer, and nut
4. Terminal boot
5. Negative (–) battery post
6. Wing nut, washer, and bolt
7. Battery hold-down

Charging the Battery

Service Interval: Before storage—Charge the battery and disconnect the battery cables.

1. Remove the battery from the chassis; refer to Removing the Battery (page 44).

2. Charge the battery for a minimum of 1 hour at 6 to 10 A.

   Note: Do not overcharge the battery.

3. When the battery is fully charged, unplug the charger from the electrical outlet, then disconnect the charger leads from the battery posts (Figure 54).

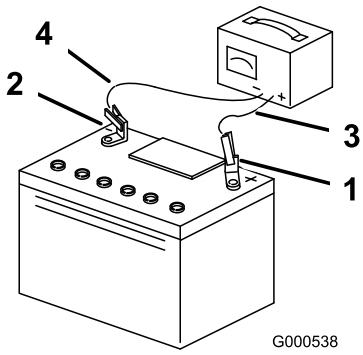

g000538

Figure 54

1. Positive (+) battery post
2. Negative (–) battery post
3. Red (+) charger lead
4. Black (–) charger lead

Installing the Battery

1. Position the battery in the tray (Figure 53).
2. Using the fasteners previously removed, install the positive (red) battery cable to the positive (+) battery terminal.
3. Using the fasteners previously removed, install the negative battery cable to the negative (-) battery terminal.
4. Slide the red terminal boot onto the positive (red) battery post.
5. Secure the battery with the hold-down (Figure 53).
6. Lower the seat.

Servicing the Fuses

The electrical system is protected by fuses. It requires no maintenance; however, if a fuse blows, check the component/circuit for a malfunction or short.

Fuse type:

- Main—F1 (30 A, blade-type)
- Charge Circuit—F2 (25 A, blade-type)

1. Remove the screws securing the control panel to the machine.

   Note: Retain all fasteners.

2. Lift the control pane up to access the main wire harness and fuse block (Figure 55).
3. To replace a fuse, pull out the fuse to remove it (Figure 55).

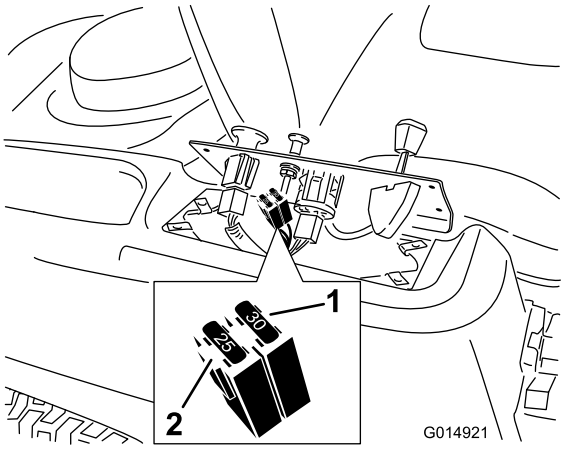

g014921

Figure 55

1. Main (30 A)
2. Charge circuit (25 A)

4. Return the control panel to its original position.

   Note: Use the screws removed previously to secure the panel to the machine.

Drive System Maintenance

Checking the Tire Pressure

Service Interval: Every 25 hours—Check tire pressure.

Maintain the air pressure in the front and rear tires as specified. Uneven tire pressure can cause an uneven cut. Check the pressure at the valve stem (Figure 56). Check the tires when they are cold to get the most accurate pressure reading.

Refer to the maximum pressure suggested by the tire manufacturer on the sidewall of the caster wheel tires.

Inflate the rear drive-wheel tires to 90 kPa (13 psi).

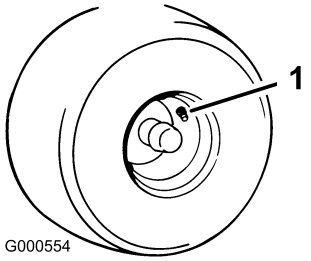

Figure 56

1. Valve stem

Releasing the Electric Brake

You can manually release the electric brake by rotating the link arms forward. Once the electric brake is energized, the brake resets.

1. Turn the key to the OFF position or disconnect the battery.
2. Loosen the bottom 2 bolts holding the mower-deck curtain to the mower deck. Refer to Releasing the Mower-Deck Curtain (page 36).
3. Locate the shaft on the electric brake where the brake link arms are connected (Figure 57).
4. Rotate the shaft forward to release the brake.
5. Tighten the bottom 2 bolts for the mower-deck curtain to the mower deck. Refer to Releasing the Mower-Deck Curtain (page 36).

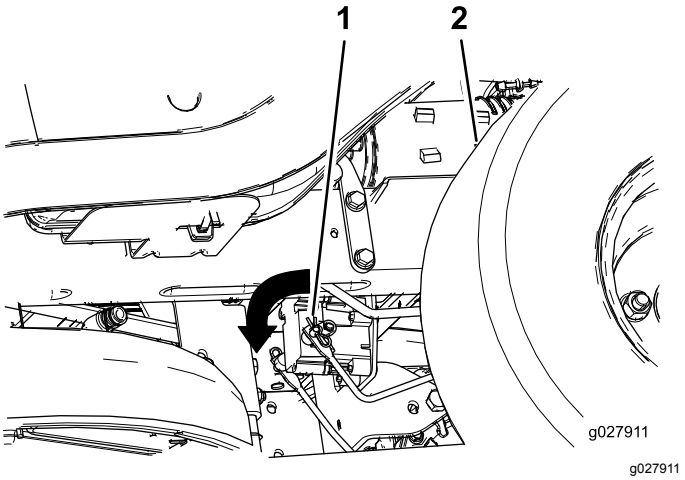

Figure 57

1. Brake-link arm on the electric brake control module
2. Left, rear tire

Belt Maintenance

Replacing the Mower-Deck Belt

The signs of a worn belt include squealing while the belt is rotating, blades slipping while cutting grass, and frayed edges, burn marks, and cracks on the belt. Replace the mower belt if any of these conditions are evident.

1. Park the machine on a level surface, disengage the blade-control switch (PTO), and engage the parking brake.
2. Shut off the engine, remove the key, and wait for all moving parts to stop before leaving the operating position.
3. Set the height-of-cut at the lowest cutting position of 38 mm (1-1/2 inches).
4. Remove the pulley covers (Figure 58).

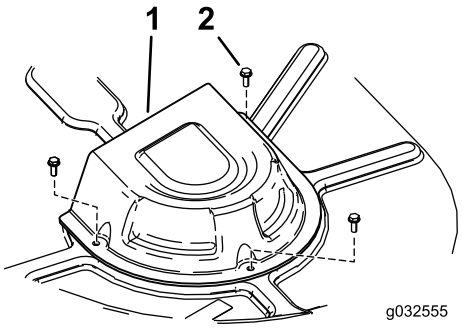

g032555

Figure 58

1. Cover
2. Screw

5. Loosen the bottom 2 bolts holding the mower-deck curtain to the mower deck. Refer to Releasing the Mower-Deck Curtain (page 36).
6. Using a spring-removal tool, (Toro Part No. 92-5771), remove the idler spring from the deck hook to remove tension on the idler pulley, and roll the belt off the pulleys (Figure 59 and Figure 60).

⚠ WARNING

The spring is under tension when installed and can cause personal injury.

Be careful when removing the belt.

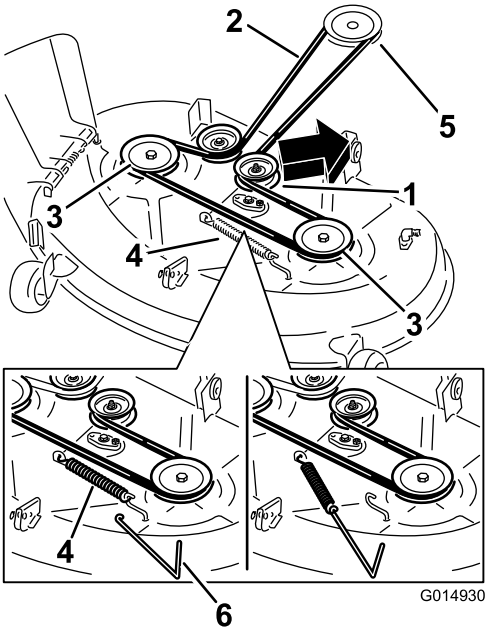

g014930

Figure 59

Mower Decks with 2 Blades

1. Idler pulley
2. Mower belt
3. Outside pulley
4. Spring
5. Engine pulley
6. Spring-removal tool

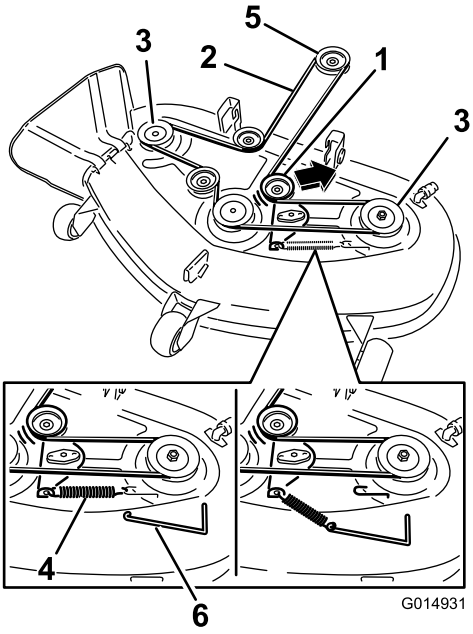

g014931

Figure 60

Mower Decks with 3 Blades

1. Idler pulley
2. Mower belt
3. Outside pulley
4. Spring
5. Engine pulley
6. Spring-removal tool

7. Route the new belt around the engine pulley and mower pulleys (Figure 60).

8. Using a spring-removal tool, install the idler spring over the deck hook, and place tension on the idler pulley and mower belt (Figure 59 and Figure 60).
9. Tighten the bottom 2 bolts for the mower-deck curtain to the mower deck. Refer to Releasing the Mower-Deck Curtain (page 36).
10. Install the pulley covers.

Mower Maintenance

Servicing the Cutting Blades

To ensure a superior quality of cut, keep the blades sharp. For convenient sharpening and replacement, keep extra blades on hand.

Blade Safety

A worn or damaged blade can break, and a piece of the blade could be thrown toward you or bystanders, resulting in serious personal injury or death. Trying to repair a damaged blade may result in discontinued safety certification of the product.

- Inspect the blades periodically for wear or damage.
- Use care when checking the blades. Wrap the blades or wear gloves, and use caution when servicing the blades. Only replace or sharpen the blades; never straighten or weld them.
- On multi-bladed machines, take care as rotating 1 blade can cause other blades to rotate.

Before Inspecting or Servicing the Blades

1. Park the machine on a level surface, disengage the blade-control switch (PTO), and engage the parking brake.
2. Shut off the engine, remove the key, and disconnect the spark-plug wires from the spark plugs.

Inspecting the Blades

Service Interval: Before each use or daily

1. Inspect the cutting edges (Figure 61).
2. If the edges are not sharp or have nicks, remove and sharpen the blade; refer to Sharpening the Blades (page 50).
3. Inspect the blades, especially in the curved area.
4. If you notice any cracks, wear, or a slot forming in this area, immediately install a new blade (Figure 61).

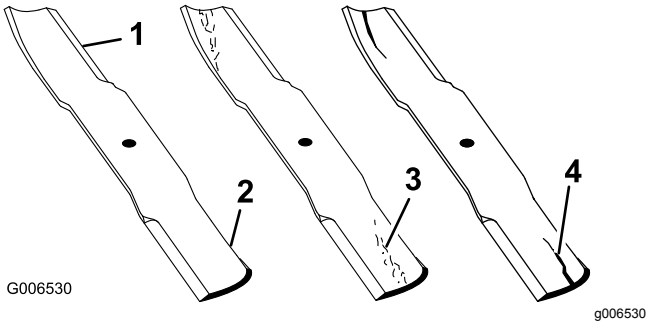

Figure 61

1. Cutting edge
2. Curved area
3. Wear/slot forming
4. Crack

Checking for Bent Blades

Note: The machine must be on a level surface for the following procedure.

1. Raise the mower deck to the highest height-of-cut position.
2. While wearing thickly padded gloves, or other adequate hand protection, slowly rotate the blade into a position that allows you to measure the distance between the cutting edge and the level surface the machine is on (Figure 62).

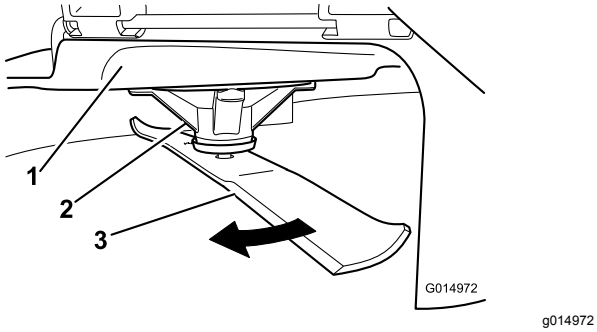

Figure 62

1. Deck
2. Spindle housing
3. Blade

3. Measure from the tip of the blade to the flat surface (Figure 63).

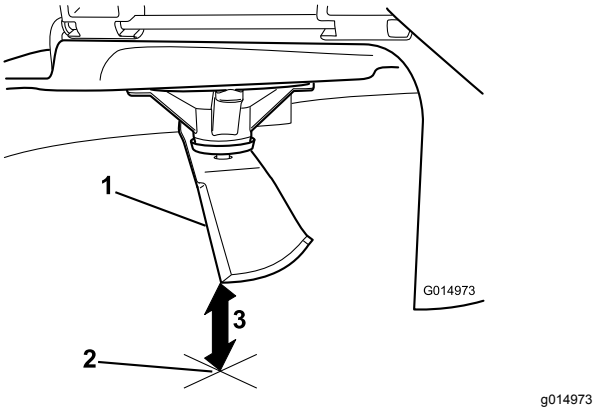

Figure 63

1. Blade (in position for measuring)
2. Level surface
3. Measured distance between blade and the surface (A)

4. Rotate the same blade 180 degrees so that the opposing cutting edge is now in the same position (Figure 64).

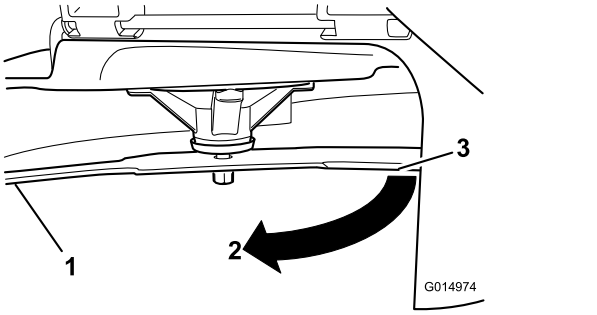

Figure 64

1. Blade (side previously measured)
2. Measurement (position used previously)
3. Opposing side of blade being moved into measurement position

5. Measure from the tip of the blade to the flat surface (Figure 65).

   Note: The variance should be no more than 3 mm (1/8 inch).

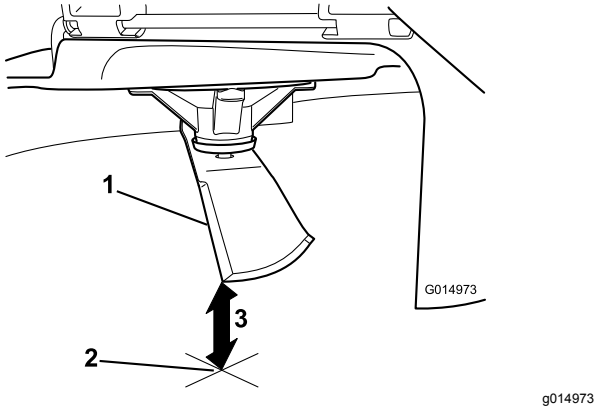

Figure 65

1. Opposite blade edge (in position for measuring)
2. Level surface
3. Second measured distance between blade and surface (B)

A. If the difference between A and B is greater than 3 mm (1/8 inch), replace the blade with a new blade; refer to Removing the Blades (page 50) and Installing the Blades (page 51).

Note: If a bent blade is replaced with a new blade, and the dimension obtained continues to exceed 3 mm (1/8 inch), the blade spindle could be bent. Contact an Authorized Service Dealer for service.

B. If the variance is within constraints, move to the next blade.

6. Repeat this procedure on each blade.

Removing the Blades

Replace the blades if they hit a solid object, or if the blade is out of balance or bent.

1. Hold the blade end using a rag or thickly padded glove.
2. Remove the blade bolt, curved washer, and blade from the spindle shaft (Figure 66).

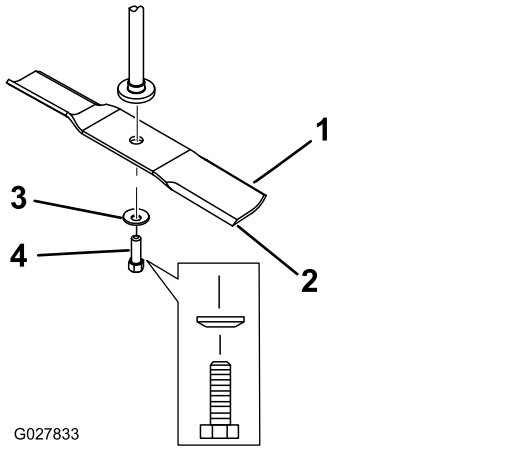

Figure 66

1. Sail area of the blade
2. Blade
3. Curved washer
4. Blade bolt

Sharpening the Blades

1. Use a file to sharpen the cutting edge at both ends of the blade (Figure 67).

Note: Maintain the original angle.

Note: The blade retains its balance if the same amount of material is removed from both cutting edges.

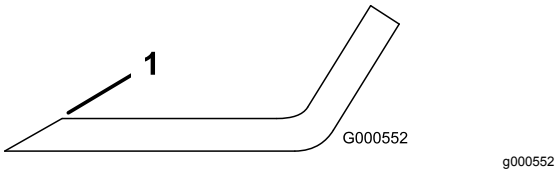

Figure 67

1. Sharpen at original angle.

2. Check the balance of the blade by putting it on a blade balancer (Figure 68).

Note: If the blade stays in a horizontal position, the blade is balanced and can be used.

Note: If the blade is not balanced, file some metal off the end of the sail area only (Figure 67).

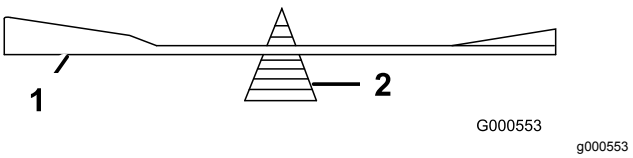

Figure 68

1. Blade
2. Balancer

3. Repeat this procedure until the blade is balanced.

Installing the Blades

1. Install the blade onto the spindle shaft (Figure 66).

   Important: **The curved part of the blade must be pointing upward toward the inside of the mower to ensure proper cutting.**

2. Install the curved washer (cupped side toward the blade) and the blade bolt (Figure 66).
3. Torque the blade bolt to 47 to 88 N·m (35 to 65 ft-lb).

Leveling the Mower Deck

Check to ensure that the mower deck is level any time you install the mower or when you see an uneven cut on your lawn.

Check the mower deck for bent blades prior to leveling, and remove and replace any bent blades; refer to the Checking for Bent Blades (page 49) before continuing.

Level the mower deck side-to-side first; then you can adjust the front-to-rear slope.

Requirements:

- The machine must be on a level surface.
- All tires must be properly inflated; refer to Checking the Tire Pressure (page 46).

Leveling from Side to Side

1. Park the machine on a level surface, disengage the blade-control switch (PTO), and engage the parking brake.
2. Shut off the engine, remove the key, and wait for all moving parts to stop before leaving the operating position.
3. Set the height-of-cut lever to the middle position.
4. Carefully rotate the blades so that they are all side to side (Figure 69 and Figure 70).

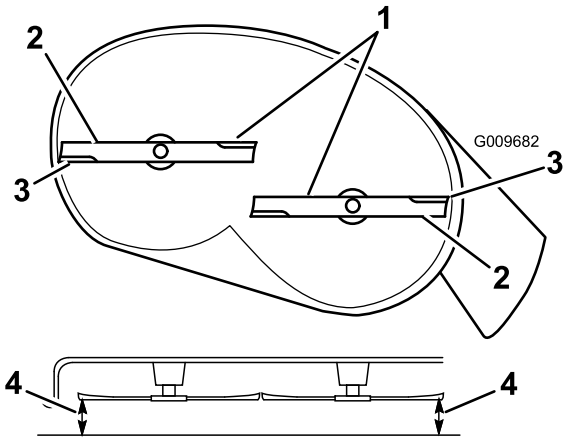

Figure 69

Mower Decks with 2 Blades

1. Blades side to side
2. Sail area of the blade
3. Outside cutting edges
4. Measure from the tip of the blade to the flat surface here.

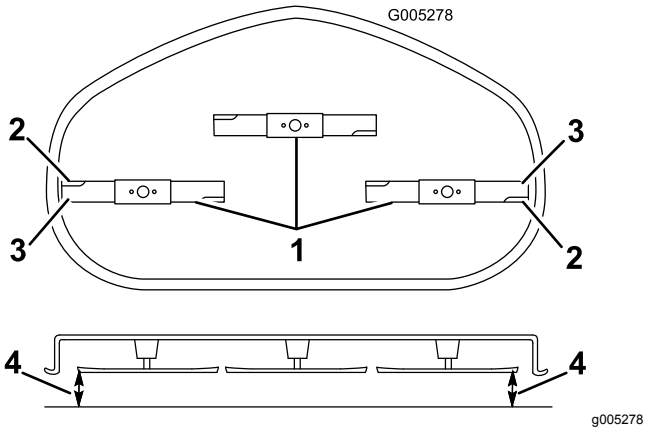

Figure 70

Mower Decks with 3 Blades

1. Blades side to side
2. Sail area of the blade
3. Outside cutting edges
4. Measure from the tip of the blade to the flat surface here.

5. Measure between the outside cutting edges and the flat surface (Figure 69 and Figure 70).

   Note: If both measurements are not within 5 mm (3/16 inch), an adjustment is required; continue with this procedure.

6. Move to the left side of the machine.
7. Loosen the side locking nut.
8. Raise or lower the left side of the mower deck by rotating the rear nut (Figure 71).

   Note: Rotate the rear nut clockwise to raise the mower deck; rotate the rear nut counter-clockwise to lower the mower deck (Figure 71).

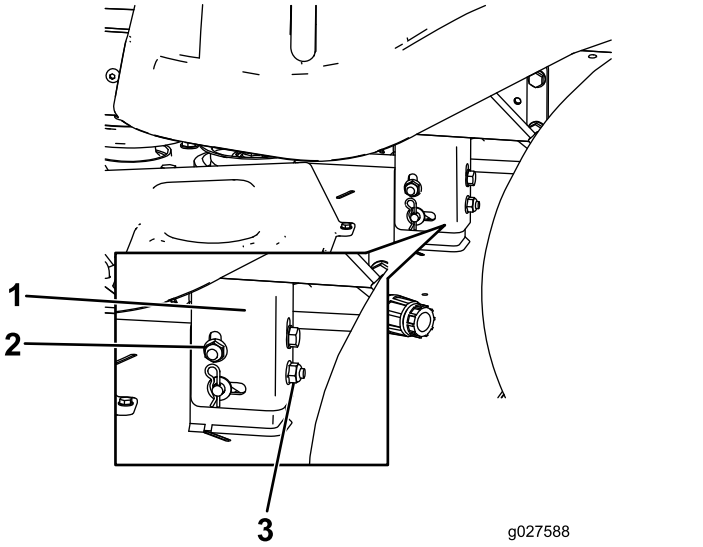

Figure 71

1. Hanger bracket
2. Side locking nut
3. Rear nut

9. Check the side-to-side adjustments again. Repeat this procedure until the measurements are correct.
10. Continue leveling the mower deck by checking the front-to-rear blade slope; refer to Adjusting the Front-to-Rear Blade Slope (page 52).

Adjusting the Front-to-Rear Blade Slope

Check the front-to-rear blade level any time you install the mower. If the front of the mower is more than 7.9 mm (5/16 inch) lower than the rear of the mower, adjust the blade level using the following instructions:

1. Park the machine on a level surface, disengage the blade-control switch (PTO), and engage the parking brake.
2. Shut off the engine, remove the key, and wait for all moving parts to stop before leaving the operating position.
3. Set the height-of-cut lever to the middle position.

   Note: Check and adjust the side-to-side blade level if you have not checked the setting; refer to Leveling from Side to Side (page 51).
4. Carefully rotate the blades so they are facing front to rear (Figure 72 and Figure 73).

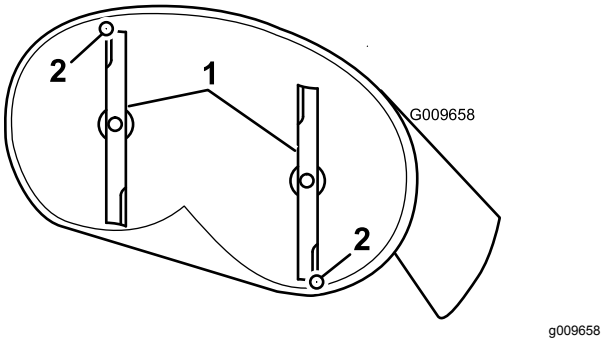

Figure 72

Mower Decks with 2 Blades

1. Blades front to rear
2. Measure from the tip of the blade to the flat surface here.

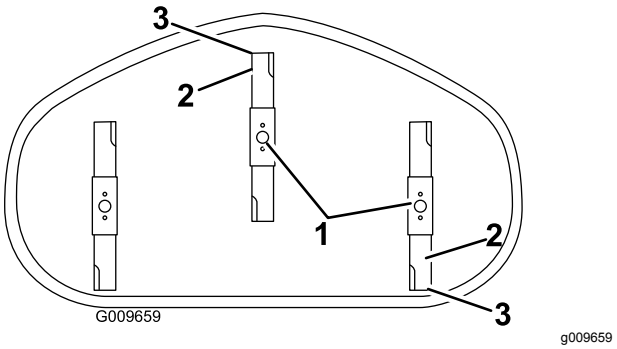

Figure 73

Mower Decks with 3 Blades

1. Blades front to rear
2. Outside cutting edges
3. Measure from the tip of the blade to the flat surface here.

5. Measure from the tip of the front blade to the flat surface, and the tip of the rear blade to the flat surface (Figure 72 and Figure 73).

   Note: If the front blade tip is not 1.6 to 7.9 mm (1/16 to 5/16 inch) lower than the rear blade tip, adjust the front locknut.
6. To adjust the front-to-rear blade slope, rotate the adjustment nut in the front of the mower (Figure 74).

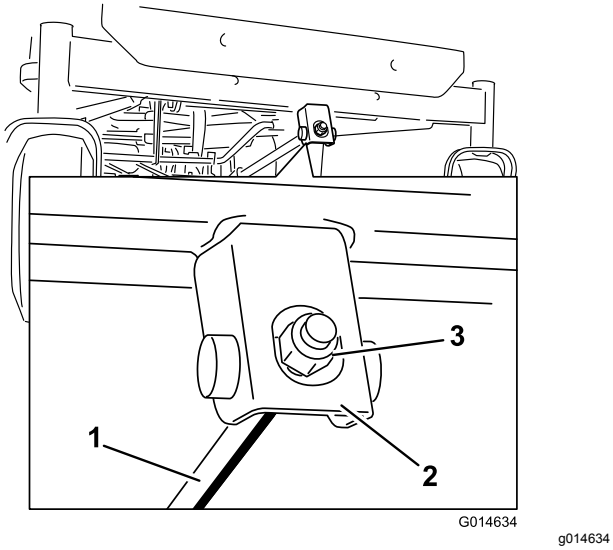

g014634

Figure 74

1. Adjusting rod
2. Adjusting block
3. Locknut

7. To raise the front of the mower, tighten the adjustment nut.
8. To lower the front of the mower, loosen the adjustment nut.
9. After adjustment, check the front-to-rear slope again, continue adjusting the nut until the front blade tip is 1.6 to 7.9 mm (1/16 to 5/16 inch) lower than the rear blade tip (Figure 72 and Figure 73).
10. When the front-to-rear blade slope is correct check the side-to-side level of the mower again, refer to Leveling from Side to Side (page 51).

Removing the Mower Deck

1. Park the machine on a level surface, disengage the blade-control switch (PTO), and engage the parking brake.
2. Shut off the engine, remove the key, and wait for all moving parts to stop before leaving the operating position.
3. Lower the height-of-cut lever to the lowest position.
4. Loosen the bottom 2 bolts holding the mower-deck curtain to the mower deck. Refer to Releasing the Mower-Deck Curtain (page 36).
5. Remove the hairpin cotter from the front support rod, and remove the rod from the deck bracket (Figure 75).

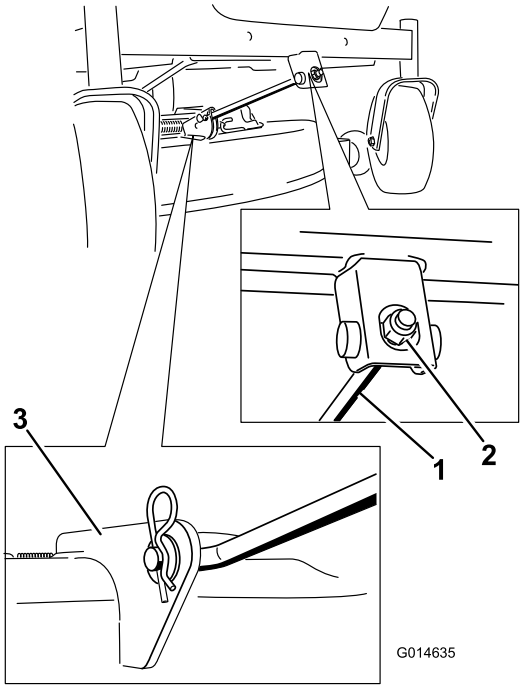

g014635

Figure 75

1. Front support rod
2. Locking nut
3. Deck bracket

6. Carefully lower the front of the mower deck to the ground.
7. Lift the mower deck and hanger brackets clear of the rear lift rod and lower the mower carefully to the ground (Figure 76).

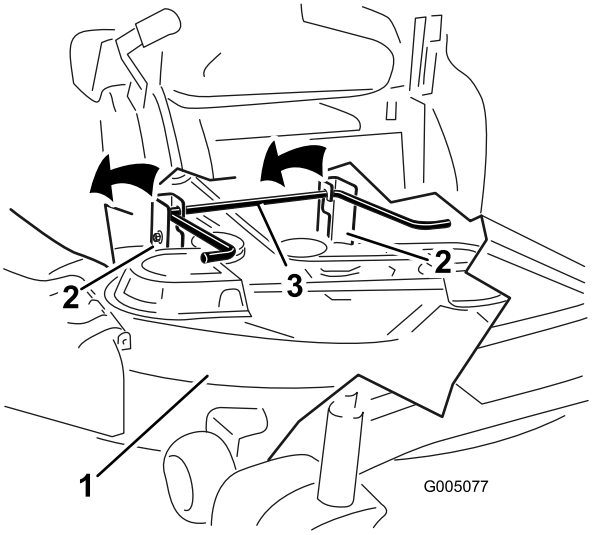

g005077

Figure 76

1. Mower deck
2. Hanger bracket
3. Rear lift rod

8. Slide the mower deck rearward to remove the mower belt from the engine pulley.

9. Slide the mower deck out from underneath the machine.

   Note: Retain all parts for future installation.

Installing the Mower Deck

1. Park the machine on a level surface, disengage the blade-control switch (PTO), and engage the parking brake.
2. Shut off the engine, remove the key, and wait for all moving parts to stop before leaving the operating position.
3. Slide the mower under the machine.
4. Lower the height-of-cut lever to the lowest position.
5. Lift the rear of the mower deck and guide the hanger brackets over the rear lift rod (Figure 74).
6. Attach the front support rod to the mower deck with the clevis pin and hairpin cotter (Figure 74).
7. Install the mower belt onto the engine pulley; refer to Replacing the Mower-Deck Belt (page 47).
8. Tighten the bottom 2 bolts for the mower-deck curtain to the mower deck; refer to Releasing the Mower-Deck Curtain (page 36).

Replacing the Grass Deflector

Service Interval: Before each use or daily—Inspect the grass deflector for damage.

⚠ WARNING

An uncovered discharge opening could allow the machine to throw objects toward you or bystanders, resulting in serious injury. Also, contact with the blade could occur.

Never operate the machine without the grass deflector, the discharge cover, or the grass-collection system in place.

1. Remove the nut (3/8 inch) from the rod under the mower (Figure 77).

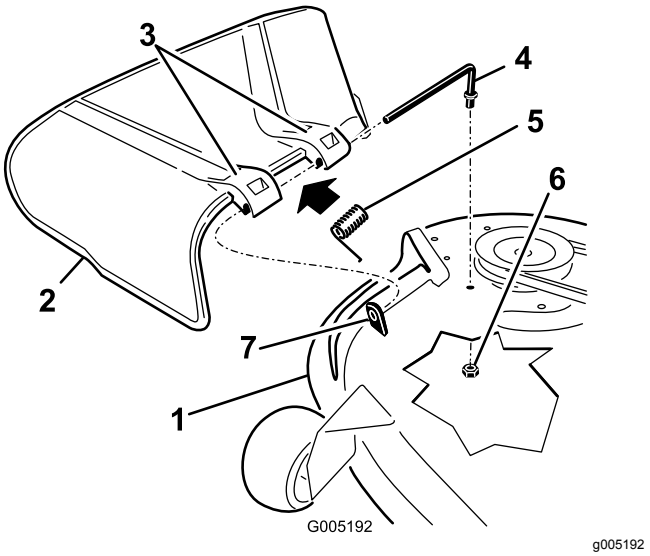

Figure 77

1. Mower deck
2. Grass deflector
3. Grass-deflector bracket
4. Rod
5. Spring
6. Nut (3/8 inch)
7. Short standoff

2. Slide the rod out of the short stand-off, spring, and grass deflector (Figure 77).
3. Remove the damaged or worn grass deflector.
4. Replace the grass deflector (Figure 77).
5. Slide the rod, straight end, through the rear grass deflector bracket.
6. Place the spring on the rod, with end wires down, and between the grass deflector brackets.
7. Slide the rod through the second grass-deflector bracket (Figure 77).
8. Insert the rod at the front of the grass deflector into the short standoff on the deck.
9. Secure the rear end of the rod into the mower with a nut (3/8 inch) as shown in Figure 77.

   Important: **The grass deflector must be spring-loaded in the down position. Lift the deflector up to test that it snaps into the full-down position.**

Cleaning

Washing the Underside of the Mower Deck

Service Interval: After each use—Clean the mower-deck housing.

Important: **You can wash the machine with a mild detergent and water. Do not pressure wash the machine. Avoid excessive use of water, especially near the control panel, under the seat, around the engine, hydraulic pumps, and motors.**

Wash the underside of the mower deck after each use to prevent grass buildup for improved mulch action and clipping dispersal.

1. Park the machine on a level surface, disengage the blade-control switch (PTO), and engage the parking brake.
2. Shut off the engine, remove the key, and wait for all moving parts to stop before leaving the operating position.
3. Attach the hose coupling to the end of the mower washout fitting, and turn the water on high (Figure 78).

   Note: Spread petroleum jelly on the washout fitting O-ring to make the coupling slide on easier and protect the O-ring.

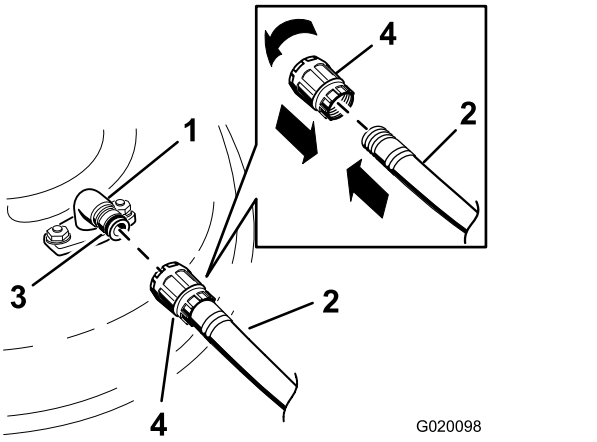

Figure 78

1. Washout fitting
2. Hose
3. O-ring
4. Coupling

4. Lower the mower to the lowest height-of-cut.
5. Sit on the seat and start the engine.
6. Engage the blade-control switch and let the mower run for 1 to 3 minutes.
7. Disengage the blade-control switch, shut off the engine, remove the ignition key, and wait for all moving parts to stop.
8. Turn the water off and remove the coupling from the washout fitting.

   Note: If the mower is not clean after 1 washing, soak it and let it stand for 30 minutes. Then, repeat the process.
9. Run the mower again for 1 to 3 minutes to remove excess water.

⚠ WARNING

A broken or missing washout fitting could expose you and others to thrown objects or blade contact. Contact with a blade or thrown debris can cause injury or death.

- **Replace broken or missing washout fitting immediately, before using machine again.**
- **Never put your hands or feet under the mower or through openings in the machine.**

Disposing of Waste

Engine oil, batteries, hydraulic fluid, and engine coolant are pollutants to the environment. Dispose of these according to your state and local regulations.

Storage

Storage Safety

- Let the engine cool before storing the machine.
- Do not store the machine or fuel near flames or drain the fuel indoors.

Cleaning and Storage

1. Disengage the blade-control switch (PTO), and engage the parking brake.
2. Shut off the engine, remove the key, and wait for all moving parts to stop before leaving the operating position.
3. Remove grass clippings, dirt, and grime from the external parts of the entire machine, especially the engine and hydraulic system. Clean dirt and chaff from the outside of the engine cylinder head fins and blower housing.

   Important: **You can wash the machine with mild detergent and water. Do not pressure wash the machine. Avoid excessive use of water, especially near the control panel, engine, hydraulic pumps, and motors.**
4. Check the parking brake operation; refer to Park Position (page 15).
5. Service the air cleaner; refer to Servicing the Air Cleaner (page 37).
6. Grease the machine; refer to Lubrication (page 37).
7. Change the crankcase oil; refer to Changing the Engine Oil and Oil Filter (page 40).
8. Check the tire pressure; refer to Checking the Tire Pressure (page 46).
9. Charge the battery; refer to Charging the Battery (page 44).
10. Scrape any heavy buildup of grass and dirt from the underside of the mower, then wash the mower with a garden hose.

    Note: Run the machine with the blade-control switch (PTO) engaged and the engine at high idle for 2 to 5 minutes after washing.
11. Check the condition of the blades; refer to Servicing the Cutting Blades (page 48).
12. Prepare the machine for storage when non-use occurs over 30 days. Prepare the machine for storage as follows:

    A. Add a petroleum based stabilizer/conditioner to fuel in the tank. Follow mixing instructions from the stabilizer manufacturer. Do not use an alcohol-based stabilizer (ethanol or methanol).

    Note: A fuel stabilizer/conditioner is most effective when mixed with fresh fuel and used at all times.

    B. Run the engine to distribute conditioned fuel through the fuel system (5 minutes).

    C. Shut off the engine, allow it to cool, and drain the fuel tank.

    D. Start the engine and run it until it stops.

    E. Dispose of fuel properly. Recycle the fuel according to local codes.

    Important: **Do not store stabilizer/conditioned fuel over 90 days.**
13. Remove and check the condition of the spark plug(s); refer to Servicing the Spark Plug (page 41). With the spark plug(s) removed from the engine, pour 30 ml (2 tablespoons) of engine oil into the spark plug hole. Use the starter to crank the engine and distribute the oil inside the cylinder. Install the spark plug(s). Do not install the wire on the spark plug(s).
14. Check and tighten all bolts, nuts, and screws. Repair or replace any part that is damaged.
15. Paint all scratched or bare metal surfaces. Paint is available from your Authorized Service Dealer.
16. Store the machine in a clean, dry garage or storage area. Remove the key from the switch and keep it out of reach of children or other unauthorized users. Cover the machine to protect it and keep it clean.

Storing the Battery

1. Fully charge the battery.
2. Let the battery rest for 24 hours, then check the battery voltage.

   Note: If the battery voltage is below 12.6 V, repeat steps 1 and 2.
3. Disconnect the cables from the battery.
4. Check the voltage periodically to ensure that the voltage is 12.4 V or higher.

   Note: If the battery voltage is below 12.4 V, repeat steps 1 and 2.

Battery Storage Tips

- Store the battery in a cool, dry area in an upright position.
- Do not stack batteries directly on top of each other, unless they are in cartons.
- Do not stack more than 3 batteries (only 2 if the battery type is commercial).
- Test a wet battery every 4 to 6 months and charge it, if necessary.
- Always test and charge the battery before installation.

Troubleshooting

Problem	Possible Cause	Corrective Action
The fuel tank is showing signs of collapsing or the machine is frequently showing signs of running out of fuel.	1. The air-cleaner paper element clogged.	1. Clean the paper element.
The engine overheats.	1. The engine load is excessive. 2. The oil level in the crankcase is low. 3. The cooling fins and air passages under the engine-blower housing are plugged. 4. The air cleaner is dirty. 5. Dirt, water, or stale fuel is in the fuel system.	1. Reduce the ground speed. 2. Add oil to the crankcase. 3. Remove the obstruction from the cooling fins and air passages. 4. Clean or replace the air-cleaner element. 5. Contact an Authorized Service Dealer
The starter does not crank.	1. The blade-control switch is engaged. 2. The motion-control levers are not in the PARK position. 3. The battery is dead. 4. The electrical connections are corroded or loose. 5. A fuse is blown. 6. A relay or switch is damaged.	1. Disengage the blade-control switch. 2. Move the motion-control levers outward to the PARK position. 3. Charge the battery. 4. Check the electrical connections for good contact. 5. Replace the fuse. 6. Contact an Authorized Service Dealer.
The engine does not start, starts hard, or fails to keep running.	1. The fuel tank is empty. 2. The choke (if applicable) is not on. 3. The air cleaner is dirty. 4. The spark-plug wire(s) is loose or disconnected. 5. The spark plug(s) is pitted, fouled, or the gap is incorrect. 6. There is dirt in fuel filter. 7. Dirt, water, or stale fuel is in fuel system. 8. There is incorrect fuel in the fuel tank. 9. The oil level in the crankcase is low.	1. Fill the fuel tank. 2. Move the choke lever to the ON position. 3. Clean or replace the air-cleaner element. 4. Install the wire(s) on the spark plug. 5. Install a new, correctly gapped spark plug(s). 6. Replace the fuel filter. 7. Contact an Authorized Service Dealer. 8. Drain the tank and replace the fuel with the proper type. 9. Add oil to the crankcase.
The engine loses power.	1. The engine load is excessive. 2. The air cleaner is dirty. 3. The oil level in the crankcase is low. 4. The cooling fins and air passages under the engine blower housing are plugged. 5. The spark plug(s) is pitted, fouled, or the gap is incorrect. 6. The fuel-tank vent is blocked. 7. There is dirt in the fuel filter. 8. Dirt, water, or stale fuel is in the fuel system. 9. There is incorrect fuel in the fuel tank.	1. Reduce the ground speed. 2. Clean the air-cleaner element. 3. Add oil to the crankcase. 4. Remove the obstruction from the cooling fins and air passages. 5. Install a new, correctly gapped spark plug(s). 6. Contact an Authorized Service Dealer. 7. Replace the fuel filter. 8. Contact an Authorized Service Dealer. 9. Drain the tank and replace the fuel with the proper type.

Problem	Possible Cause	Corrective Action
The machine does not drive.	1. The bypass valves are open. 2. The traction belts are worn, loose, or broken. 3. The traction belts are off the pulleys. 4. The transmission has failed.	1. Close the tow valves. 2. Contact an Authorized Service Dealer. 3. Contact an Authorized Service Dealer. 4. Contact an Authorized Service Dealer.
The machine vibrates abnormally.	1. The cutting blade(s) is/are bent or unbalanced. 2. The blade mounting bolt is loose. 3. The engine mounting bolts are loose. 4. The engine pulley, idler pulley, or blade pulley is loose. 5. The engine pulley is damaged. 6. The blade spindle is bent. 7. The motor mount is loose or worn.	1. Install new cutting blade(s). 2. Tighten the blade mounting bolt. 3. Tighten the engine mounting bolts. 4. Tighten the appropriate pulley. 5. Contact an Authorized Service Dealer. 6. Contact an Authorized Service Dealer. 7. Contact an Authorized Service Dealer.
The cutting height is uneven.	1. The blade(s) is not sharp. 2. A cutting blade(s) is/are bent. 3. The mower is not level. 4. An anti-scalp roller (if applicable) is not set correctly. 5. The underside of the mower deck is dirty. 6. The tire pressure is incorrect. 7. A blade spindle is bent.	1. Sharpen the blade(s). 2. Install a new cutting blade(s). 3. Level the mower from side-to-side and front-to-rear. 4. Adjust the anti-scalp wheel height. 5. Clean the underside of the mower deck. 6. Adjust the tire pressure. 7. Contact an Authorized Service Dealer.
The blades do not rotate.	1. The drive belt is worn, loose or broken. 2. The drive belt is off of the pulley. 3. The power-takeoff (PTO) switch or PTO clutch is faulty. 4. The mower belt is worn, loose, or broken.	1. Install a new drive belt. 2. Install the drive belt and check the adjusting shafts and belt guides for the correct position. 3. Contact an Authorized Service Dealer. 4. Install a new mower belt.

Schematics

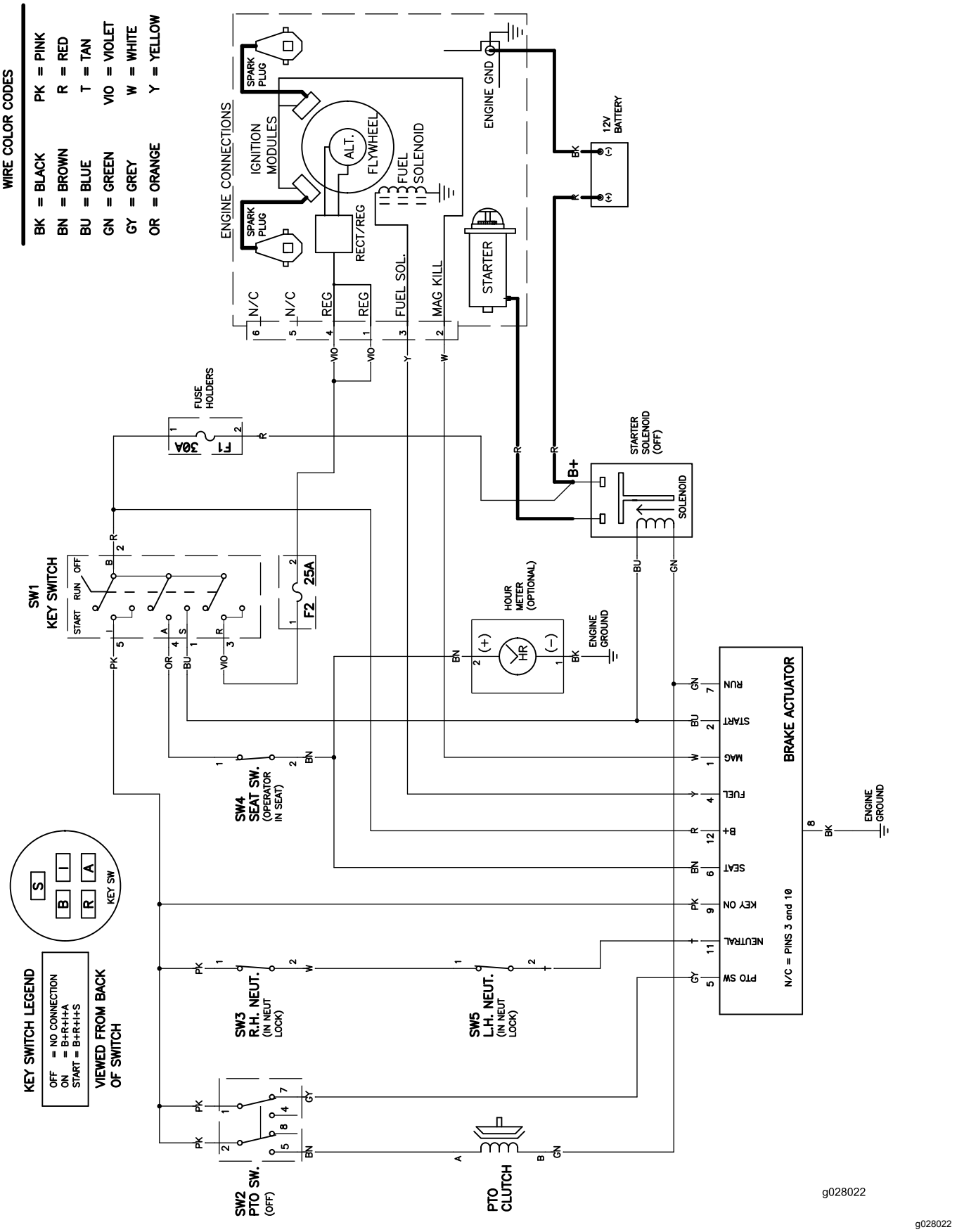

g028022

Electrical Diagram (Rev. A)

Notes:

Notes:

Notes:

European Privacy Notice

The Information Toro Collects
Toro Warranty Company (Toro) respects your privacy. In order to process your warranty claim and contact you in the event of a product recall, we ask you to share certain personal information with us, either directly or through your local Toro company or dealer.

The Toro warranty system is hosted on servers located within the United States where privacy law may not provide the same protection as applies in your country.

BY SHARING YOUR PERSONAL INFORMATION WITH US, YOU ARE CONSENTING TO THE PROCESSING OF YOUR PERSONAL INFORMATION AS DESCRIBED IN THIS PRIVACY NOTICE.

The Way Toro Uses Information
Toro may use your personal information to process warranty claims, to contact you in the event of a product recall and for any other purpose which we tell you about. Toro may share your information with Toro's affiliates, dealers or other business partners in connection with any of these activities. We will not sell your personal information to any other company. We reserve the right to disclose personal information in order to comply with applicable laws and with requests by the appropriate authorities, to operate our systems properly or for our own protection or that of other users.

Retention of your Personal Information
We will keep your personal information as long as we need it for the purposes for which it was originally collected or for other legitimate purposes (such as regulatory compliance), or as required by applicable law.

Toro's Commitment to Security of Your Personal Information
We take reasonable precautions in order to protect the security of your personal information. We also take steps to maintain the accuracy and current status of personal information.

Access and Correction of your Personal Information
If you would like to review or correct your personal information, please contact us by email at legal@toro.com.

Australian Consumer Law

Australian customers will find details relating to the Australian Consumer Law either inside the box or at your local Toro Dealer.