FORM NO. 3319–741

TORO®

PTO BELT COVER INSTALLATION KIT

for 520 Series Garden Tractors

PART NUMBER 94–3745

INSTALLATION INSTRUCTIONS

Note: Keep these Instructions with your tractor Operator's Manual for future reference.

Loose Parts

Note: Use the chart below to identify parts used for assembly.

DESCRIPTION	QTY.	USE
Heat Shield	1	Replaces the existing heat shield
PTO Belt Cover	1	Attaching the belt cover to the retainer nut and belt cover bracket
Wing Nut – 1/4"-20	1	
Knob	1	
Retainer Nut – 1/4"-20	1	Attaching the belt cover to the tractor belt guard
Belt Cover Bracket	1	Attaching the belt cover bracket to the tractor frame
Cap Screw – 3/8"-16 x 1" (25 mm)	1	
Locknut – 3/8"-16	1	

Installing the New Heat Shield

1. Open the hood and disassemble the old heat shield from the muffler (Fig. 1).
2. Fasten the new heat shield to the muffler using the six #10–24 screws removed in step 1 above (Fig. 1).

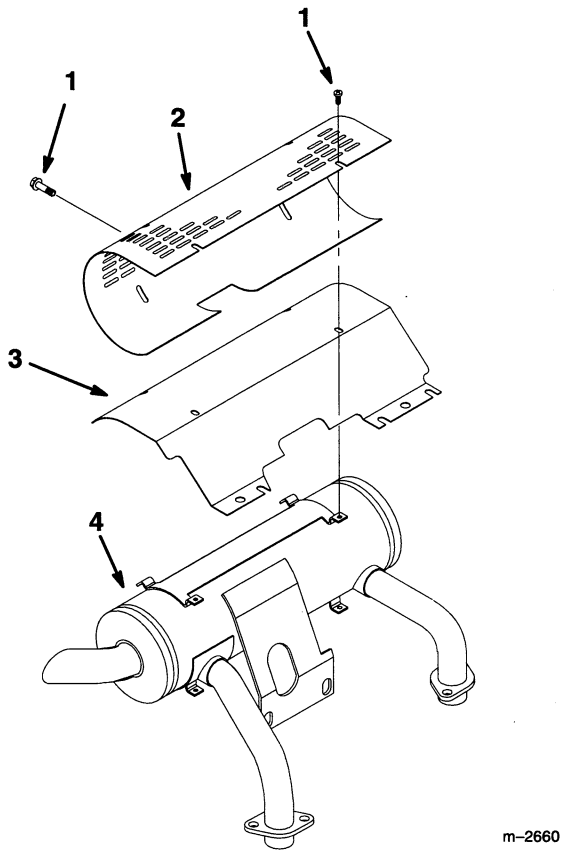

Figure 1

1. #10-24 Screw (6)
2. Heat Shield
3. Deflector Baffle
4. Muffler

Mounting the Belt Cover Bracket

Fasten the belt cover bracket to the existing hole in the tractor frame using the 3/8"-16 x 1" (25 mm) cap screw and locknut (Fig. 2).

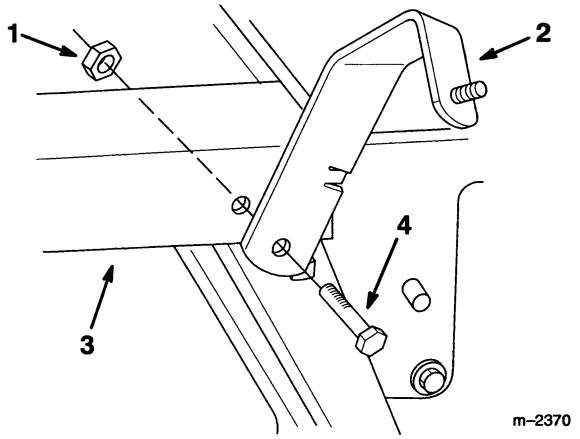

Figure 2

1. 3/8" Locknut
2. Belt Cover Bracket
3. Tractor Frame
4. 3/8"-16 x 1" (25 mm) Cap Screw

Installing the Retainer Bolt into the Belt Guard

1. Remove the belt guard from the right side of the tractor.
2. Cut out the hole template (Fig. 5) from the back of this installation manual.
3. Fold the template tabs along the dotted lines, then tape the hole template onto the belt guard (Fig. 3).
4. Lay out, center–punch and drill a 5/16" hole in the center of the square hole as marked on the template (Fig. 3).
5. Use a file to open up the square hole as drawn on the template (Fig. 3).
6. Snap the retainer nut into the square hole in the belt guard from the back side of the guard (Fig. 3).

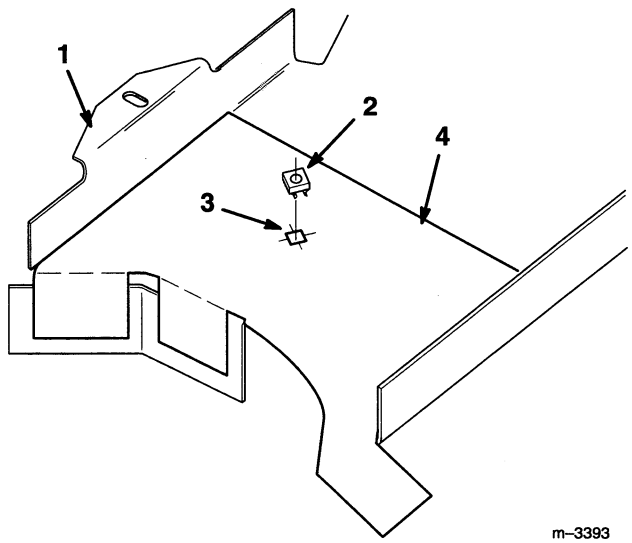

Figure 3

1. Belt Guard
2. Retainer Nut
3. Square Hole
4. Hole Template

7. Reinstall the belt guard and attached retainer nut onto the tractor.

Installing the Belt Cover

1. Install the belt cover over the power take–off (PTO) pulleys, and onto the 1/4"-20 stud on the belt cover bracket (Fig. 4).
2. Install and tighten the wing nut onto the 1/4"-20 stud on the belt cover bracket (Fig. 4).
3. Install and tighten the knob into the retainer nut on the belt guard (Fig. 4).

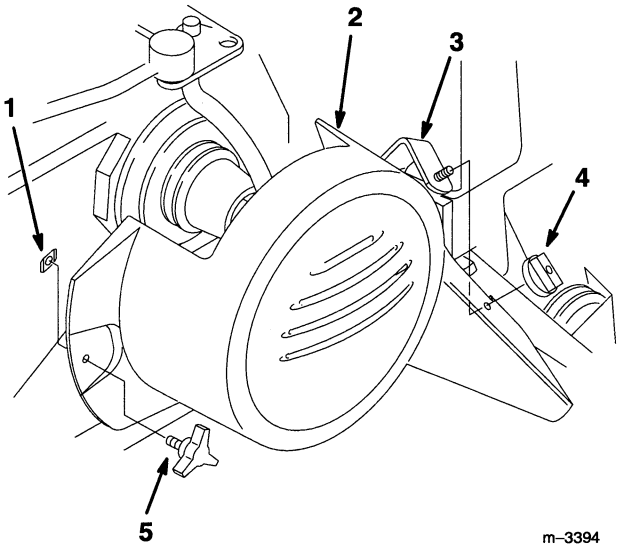

Figure 4

1. Retainer Nut
2. Belt Cover
3. Belt Cover Bracket
4. Wing Nut
5. Knob

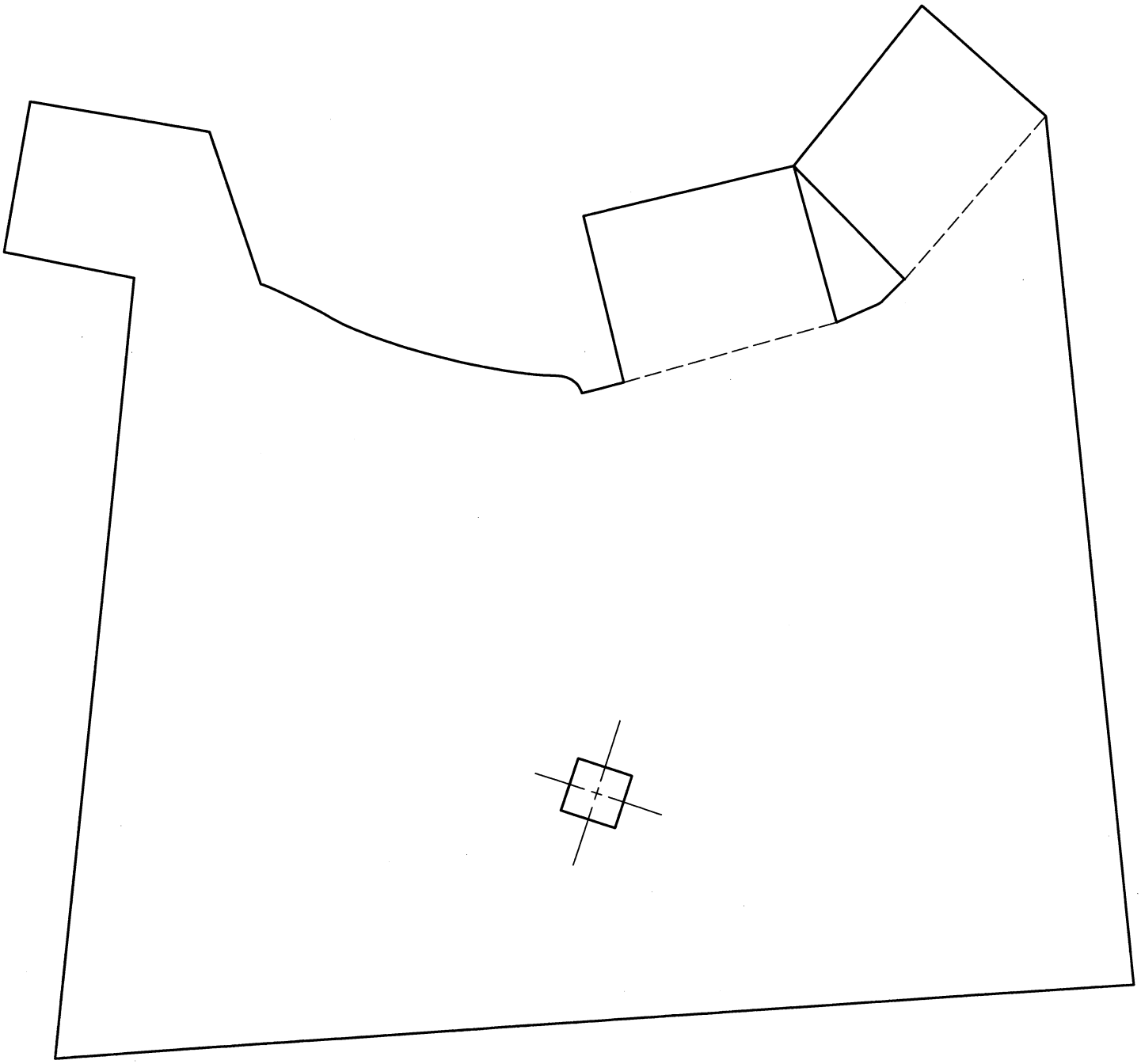

m–2368

Figure 5 – Hole Template for Twin–cylinder Tractors (to scale)


TORO®