Form No. 3417-677 Rev A

# Rod Replacement Kit

## Greensmaster® Flex™ 1820 or 2120 Series Traction Unit with Trans Pro 100 Tow-Behind Trailer

**Model No. 136-8548**

**Model No. 136-8551**

**Installation Instructions**

**⚠ WARNING**

**CALIFORNIA**
**Proposition 65 Warning**

**This product contains a chemical or chemicals known to the State of California to cause cancer, birth defects, or reproductive harm.**

# Installation

# 1

## Removing the Existing Rods

**No Parts Required**

### Procedure

1. Raise the trailer and place jack stands underneath it.
2. Remove the lug nuts that secure the wheel assemblies to the trailer axles (Figure 1).

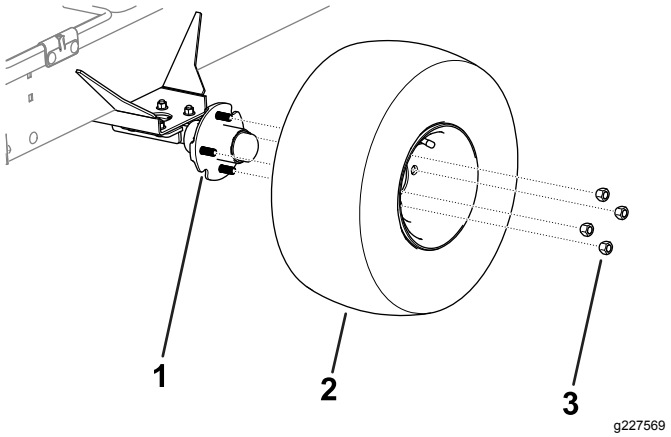


**Figure 1**

1. Axle
2. Wheel assembly
3. Lug nut

3. Remove the wheel assemblies from both sides of the trailer (Figure 1).
4. Remove the carriage bolts, flange nuts, and spring latches that secure the rods and rod brackets to both sides of the trailer (Figure 2).

   **Note:** Retain the carriage bolts, flange nuts, and spring latches for installation.

© 2017—The Toro® Company
8111 Lyndale Avenue South
Bloomington, MN 55420

Register at www.Toro.com.

CE

Original Instructions (EN)
Printed in the USA
All Rights Reserved

*3417-677* A

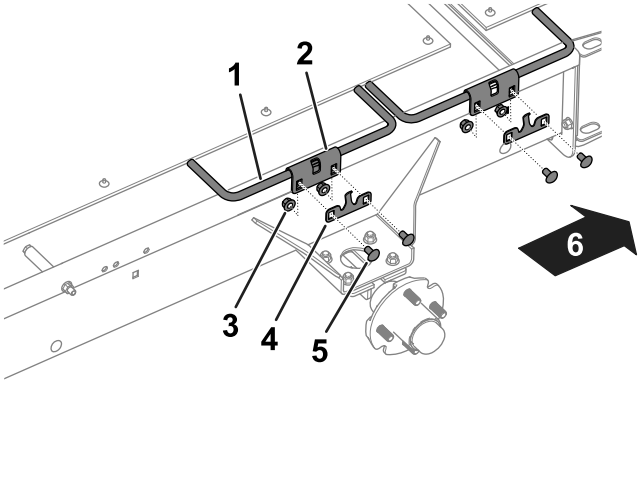


g227387

**Figure 2**
TransPro—left side shown

1. Rod
2. Rod bracket
3. Flange nut
4. Spring latch
5. Carriage bolt
6. Rear of the trailer

5. Remove the rods and rod brackets from the trailer (Figure 2).

   **Note:** Retain the rod brackets for installation.

6. Remove the side ramps (Figure 3) from the trailer by loosening and removing the fasteners that secure the side ramps to the trailer.

7. Remove the bolt (3/8 x 4-3/4 inches), spacer (2-1/2 inches), spacer (1-1/4 inch), and nut from the right side of the trailer (Figure 3).

   **Note:** Retain the spacer (1-1/4 inch) and nut for installation.

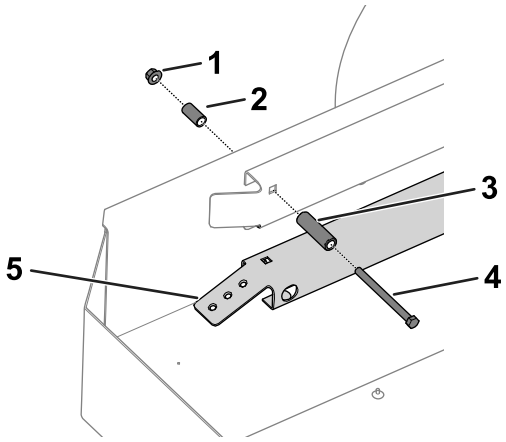


g230136

**Figure 3**
TransPro (equipped with 18-inch Transport Conversion Kit)—right side shown

1. Nut
2. Spacer (1-1/4 inch)
3. Spacer (2-1/2 inches)
4. Bolt
5. Side ramp

# 2

# Installing the Rods

**Parts needed for this procedure:**

| | |
|---|---|
| 3 | Rod |
| 1 | Right, front rod |
| 1 | Bolt |
| 1 | Spacer |

## Procedure

1. Use the previously removed carriage bolts, flange nuts, spring latches, and rod brackets to install the rods to the trailer; refer to Figure 2.

   **Note:** Install the right, front rod to the right, front side of the trailer as shown in Figure 4.

   **Note:** Ensure that the rod hooks face downwards and sit flush with the trailer lip as shown in Figure 4.

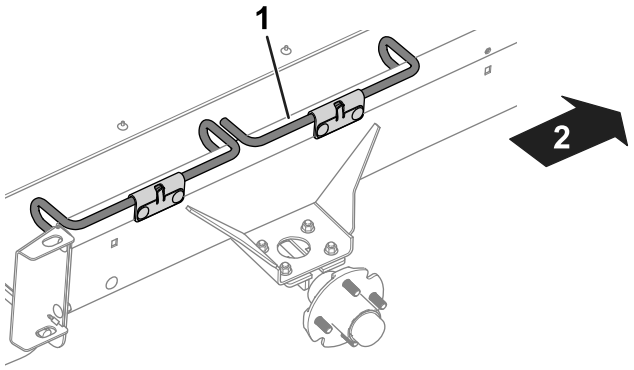


g227393

**Figure 4**
TransPro—right side shown

1. Right, front rod
2. Front of the trailer

2. Install the bolt and spacer (provided in this kit) and the previously removed spacer (1-1/4 inch) and nut to the right side of the trailer (Figure 3).
3. Use the lug nuts to install the wheel assemblies to the axles; refer to Figure 1.
4. Torque the lug nuts to 80 ft-lb (108 N·m).
5. Lower the trailer and remove the stands.