Form No. 3417-693 Rev A

TORO®

Count on it.

Parts Catalog

Rod Replacement Kit

Greensmaster® Flex™ 1820 Series Traction Unit with Trans Pro 100 Tow-Behind Trailer

Model No. 136-8551

Register at www.Toro.com.
Original Instructions (EN)

CE

3417-693 A

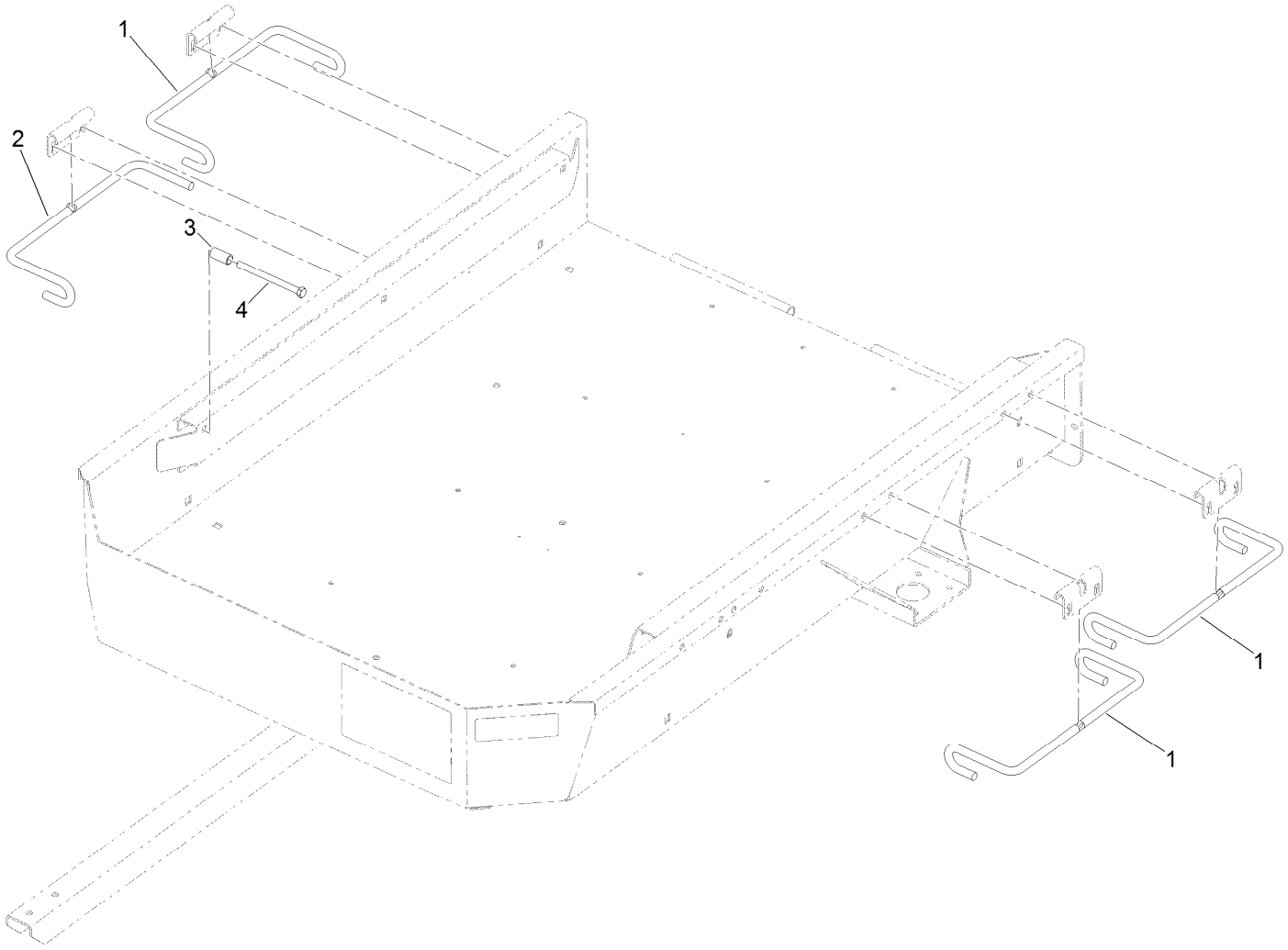

Rod Replacement Assembly No. 136-8551

Ref.	*Part Number*	*Qty.*	*Description*
1	136-8552	3	Rod-Trailer
2	136-8553	1	Rod-Trailer
3	98-8777	1	Spacer
4	323-38	1	Screw-HH