Form No. 3398-979 Rev B

TORO®

Count on it.

Operator's Manual

TimeCutter® SW 4200 or SW 5000 Riding Mower

Model No. 74675—Serial No. 316000001 and Up
Model No. 74680—Serial No. 316000001 and Up

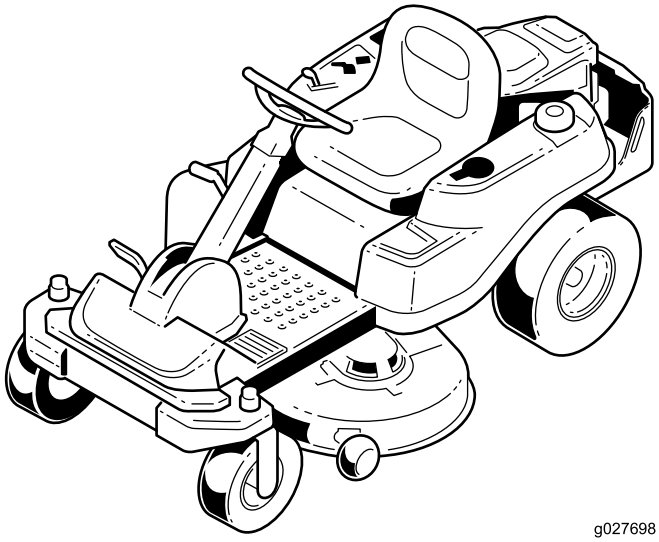

g027698

Register at www.Toro.com.
Original Instructions (EN)

CE

3398-979 B

This product complies with all relevant European directives; for details, please see the separate product specific Declaration of Conformity (DOC) sheet.

Gross Horsepower

The gross or net horsepower of this engine was laboratory rated by the engine manufacturer in accordance with the Society of Automotive Engineers (SAE) J1940. As configured to meet safety, emission, and operating requirements, the actual engine torque on this class of mower will be significantly lower.

Go to www.Toro.com to view specifications on your mower model.

This spark ignition system complies with Canadian ICES-002

Introduction

This machine is a ride-on, rotary-blade lawn mower intended to be used by homeowners in residential applications. It is primarily designed for cutting grass on well-maintained lawns. It is not designed for cutting brush, mowing grass and other growth alongside highways, or for agricultural uses.

Read this information carefully to learn how to operate and maintain your product properly and to avoid injury and product damage. You are responsible for operating the product properly and safely.

You may contact Toro directly at www.Toro.com for product safety and operation training materials, accessory information, help finding a dealer, or to register your product.

Whenever you need service, genuine Toro parts, or additional information, contact an Authorized Service Dealer or Toro Customer Service and have the model and serial numbers of your product ready. Figure 1 identifies the location of the model and serial numbers on the product. Write the numbers in the space provided.

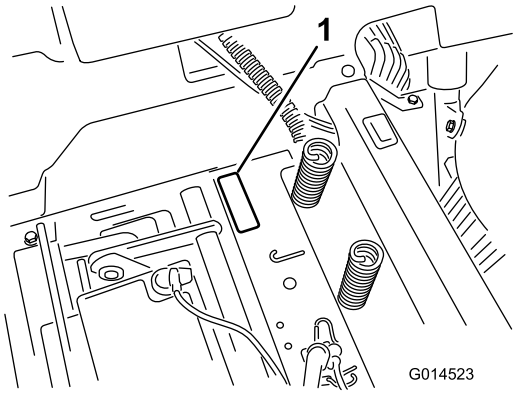

g014523

Figure 1

Under the seat

1. Model and serial number plate

Write the product model and serial numbers in the space below:

Model No. _____

Serial No. _____

This manual identifies potential hazards and has safety messages identified by the safety alert symbol (Figure 2), which signals a hazard that may cause serious injury or death if you do not follow the recommended precautions.



g000502

Figure 2

1. Safety alert symbol.

This manual uses 2 words to highlight information. **Important** calls attention to special mechanical information and **Note** emphasizes general information worthy of special attention.

Contents

Safety 4
Safe Operating Practices 4
Toro Mower Safety 6
Model 74675 7
Model 74680 7
Slope Indicator 8
Safety and Instructional Decals 9
Product Overview 16
Controls 16
Operation 18

© 2017—The Toro® Company
8111 Lyndale Avenue South
Bloomington, MN 55420

Contact us at www.Toro.com.
Printed in the USA
All Rights Reserved

Adding Fuel 18
Checking the Engine-Oil Level 19
Breaking in a New Machine 19
Think Safety First 19
Starting the Engine 21
Operating the SmartPark™ Parking Brake 21
Operating the Blades 22
Stopping the Engine 22
Driving the Machine 22
Stopping the Machine 23
Mowing in Reverse 23
Adjusting the Height-of-Cut 23
Positioning the Seat 24
Positioning the Steering Wheel 24
Adjusting the Anti-scalp Rollers 24
Adjusting the Anti-scalp Rollers 25
Pushing the Machine by Hand 25
Converting to Side Discharge 26
Converting to Side Discharge (for models with) 27
Transporting the Machine 29
Loading the Machine 30
Operating Tips 31
Maintenance 33
Recommended Maintenance Schedule(s) 33
Pre-Maintenance Procedures 34
Raising the Seat 34
Releasing the Mower-Deck Curtain 34
Raising the Front of the Machine 34
Lubrication 35
Greasing the Bearings 35
Engine Maintenance 35
Servicing the Air Cleaner 35
Servicing the Engine Oil 36
Servicing the Spark Plug 39
Cleaning the Cooling System 41
Fuel System Maintenance 41
Replacing the In-Line Fuel Filter 41
Electrical System Maintenance 42
Charging the Battery 42
Servicing the Fuses 44
Drive System Maintenance 44
Checking the Tire Pressure 44
Releasing the Electric Brake 44
Mower Maintenance 45
Servicing the Cutting Blades 45
Leveling the Mower Deck 48
Removing the Mower Deck 50
Installing the Mower Deck 51
Replacing the Grass Deflector 51
Mower Belt Maintenance 52
Inspecting the Belts 52
Replacing the Mower-Deck Belt 52
Cleaning 54
Cleaning under the Front of the Machine 54
Washing the Underside of the Mower 54
Storage 55
Cleaning and Storage 55
Troubleshooting 56
Schematics 58

Safety

This machine has been designed in accordance with EN ISO 5395:2013.

Improperly using or maintaining this mower can result in injury. To reduce the potential for injury, comply with these safety instructions.

Toro designed and tested this mower for reasonably safe service; however, failure to comply with the following instructions may result in personal injury.

To ensure maximum safety, best performance, and to gain knowledge of the product, it is essential that you and any other operator of the mower read and understand the contents of this manual before the engine is ever started. Pay particular attention to the safety alert symbol (Figure 2) which means Caution, Warning, or Danger. Read and understand the instruction because it has to do with safety. Failure to comply with the instruction may result in personal injury.

Safe Operating Practices

Training

- Read the *Operator's Manual* and other training material.

  Note: If the operator(s) or mechanic(s) cannot read the manual language, it is the owner's responsibility to explain this material to them.
- Become familiar with the safe operation of the equipment, operator controls, and safety signs.
- All operators and mechanics should be trained. The owner is responsible for training the users.
- Never let children or untrained people operate or service the equipment.

  Note: Local regulations may restrict the age of the operator.
- The owner/user can prevent and is responsible for accidents or injuries occurring to himself or herself, other people, or damage to property.

Preparation

- Evaluate the terrain to determine what accessories and attachments are needed to properly and safely perform the job. Only use accessories and attachments approved by the manufacturer.
- Wear appropriate clothing; including safety glasses, long pants, substantial, slip resistant footwear, gloves, and hearing protection.

  Important: **Tie back long hair. Do not wear jewelry.**
- Inspect the area where the equipment is to be used and ensure that all objects are removed from the machine before use.
- Use extra care when handling fuels. They are flammable and vapors are explosive.
  - Use only an approved container.
  - Do not remove the fuel cap or add fuel with the engine running. Allow the engine to cool before refueling. Do not smoke near the machine when the engine is running.
  - Do not refuel or drain the machine indoors.
- Check that the operator's presence controls, safety switches, and shields are attached and functioning properly. Do not operate the machine unless they are functioning properly.

Operation

- Lightning can cause severe injury or death. If lightning is seen, or thunder is heard in the area, do not operate the machine; seek shelter.
- Do not operate the engine in a confined space where dangerous carbon monoxide and other exhaust gasses can collect.
- Only operate in well-lit areas, keeping away from holes and hidden hazards.
- Ensure that all drives are in neutral and that the parking brake is engaged before starting engine. Only start the engine from the operator’s position.
- Slow down and use extra care on hillsides. Be sure to travel side to side on hillsides. Turf conditions can affect the stability of the machine. Use caution while operating near drop-offs.
- Slow down and use caution when making turns and when changing directions on slopes.
- Do not raise the mower deck with the blades running.
- Do not operate the machine without the PTO shield or other guards securely in place. Be sure all interlocks are attached, adjusted properly, and functioning properly.
- Do not operate with the discharge deflector raised, removed or altered, unless using a grass catcher.

- Do not change the engine governor setting or overspeed the engine.
- Stop on level ground, disengage drives, engage the parking brake (if provided), shut off the engine before leaving the operator's position for any reason, including emptying the catchers or unclogging the chute.
- Stop equipment and inspect the blades after striking objects or if an abnormal vibration occurs. Make the necessary repairs before resuming operations.
- Keep your hands and feet away from the cutting unit.
- Look behind and down before backing up to ensure a clear path.
- Keep pets and bystanders away from an operating machine.
- Slow down and use caution when making turns and crossing roads and sidewalks. Stop the blades if you are not mowing.
- Be aware of the mower-discharge direction and do not point it at anyone.
- Do not operate the mower under the influence of alcohol or drugs.
- Use care when loading or unloading the machine into or from a trailer or truck.
- Use care when approaching blind corners, shrubs, trees, or other objects that may obscure vision.

Safe Handling of Fuels

- To avoid personal injury or property damage, use extreme care in handling gasoline. Gasoline is extremely flammable and the vapors are explosive.
- Extinguish all cigarettes, cigars, pipes, and other sources of ignition.
- Use only an approved fuel container.
- Do not remove the fuel cap or add fuel with the engine running.
- Allow the engine to cool before fueling.
- Do not fuel the machine indoors.
- Do not store the machine or fuel container where there is an open flame, spark, or pilot light such as on a water heater or on other appliances.
- Do not fill containers inside a vehicle, on a truck, or on a trailer bed with a plastic liner. Always place containers on the ground away from your vehicle before filling.
- Remove equipment from the truck or trailer and fuel it on the ground. If this is not possible, then add fuel with such equipment as a portable container, rather than from a fuel dispenser nozzle.
- Keep the nozzle in contact with the rim of the fuel tank or container opening at all times until fueling is complete. Do not use a nozzle lock open device.
- If fuel is spilled on clothing, change your clothing immediately.
- Do not overfill fuel tank. Replace fuel cap and tighten securely.

Maintenance and Storage

- Disengage drives, set the parking brake, stop the engine, and remove the key or disconnect spark-plug wire. Wait for all movement to stop before adjusting, cleaning, or repairing.
- Clean grass and debris from the cutting unit, drives, mufflers, and engine to help prevent fires.
- Clean up oil or fuel spillage.
- Let the engine cool before storing.
- Do not store fuel near flames or drain indoors.
- Do not allow untrained personnel to service machine.
- Use jack stands to support components when required.
- Carefully release pressure from components with stored energy.
- Disconnect the battery or remove the spark-plug wire before making any repairs. Disconnect the negative terminal first and the positive terminal last. Reconnect the positive first and negative last.
- Use care when checking the blades. Wrap the blade(s) or wear thickly-padded gloves, and use caution when servicing them. Only replace blades; do not straighten or weld them.
- Keep hands and feet away from moving parts. If possible, do not make adjustments with the engine running.
- Keep all parts in good working condition and all hardware tightened. Replace all worn or damaged decals.

Hauling

- Use care when loading or unloading the machine into a trailer or a truck.
- Use full-width ramps for loading machine into a trailer or a truck.
- Tie the machine down securely using straps, chains, cable, or ropes. Both front and rear straps should be directed down and outward from the machine.

Toro Mower Safety

The following list contains safety information specific to Toro products and other safety information you must know.

This product is capable of amputating hands and feet, and throwing objects. Always follow all safety instructions to avoid serious injury or death.

This product is designed for cutting and recycling grass, or, when equipped with a grass bagger, for catching cut grass. Any use for purposes other than these could prove dangerous to the user and bystanders.

General Operation

- Be sure that the area is clear of bystanders before mowing. Stop the machine if anyone enters the area.
- Do not touch equipment or attachment parts which may be hot from operation. Allow all of the parts to cool before attempting to maintain, adjust, or service the machine.
- Use only Toro-approved attachments. Warranty may be voided if used with any unapproved attachments.
- Check carefully for overhead clearances (i.e. branches, doorways, electrical wires, etc.) before operating under any objects, and do not contact them.
- Slow down before making turns and use extra caution.
- Use caution when riding the platform over curbs, rocks, roots, or other obstructions.
- Look behind and down before backing up to ensure a clear path. Use extra care when operating in reverse.
- Do not jerk the controls; use a steady motion.
- When loading or unloading the machine, use one full-width ramp that is wide enough to extend beyond the width of the machine.
- Do not carry passengers.
- Do not carry equipment on the machine.

Slope Operation

All slopes and ramps require extra caution. If you feel uneasy on a slope, do not mow it.

- Remove obstacles such as rocks, tree limbs, etc. from the mowing area.
- Watch for holes, ruts or bumps.

  Note: Tall grass can hide obstacles.
- Use caution near drop-offs, ditches, or embankments.

  Note: The machine could suddenly turn over if a wheel goes over the edge of a cliff or ditch, or if an edge caves in.
- Use extra care with grass catchers or other attachments.

  Note: These can change the stability of the machine.
- Keep all movement on slopes slow and gradual.
- Mow slopes side to side.
- Do not mow slopes greater than 15 degrees.

Towing Safety

- Do not attach towed equipment except at the hitch point.
- Follow the attachment manufacturer's recommendation for weight limits for towed equipment and towing on slopes. Towed weight must not exceed the weight of the machine, operator, and ballast. Use counterweights or wheel weights as described in the attachment, or in the pulling machine *Operator's Manual*.
- Never allow children or others in or on towed equipment.
- On slopes, the weight of the towed equipment may cause loss of traction, increased risk of rollover, and loss of control. Reduce the towed weight and slow down.
- Stopping distance increases with the weight of the towed load. Travel slowly and allow extra distance to stop.
- Make wide turns to keep the attachment clear of the machine.

Service

- Do not store the machine or a fuel container inside where there is an open flame, such as near a water heater or furnace.
- Keep the nuts and bolts tight, especially the blade-attachment bolts.
- Never remove or tamper with safety devices. Check their proper operation regularly. Never do anything to interfere with the intended function of a

safety device or to reduce the protection provided by a safety device.

- Removing standard original equipment parts and accessories may alter the warranty, traction, and safety of the machine. Failure to use original Toro parts could cause serious injury or death. Making unauthorized changes to the engine, fuel or venting system, may violate regulations.
- Replace all parts including, but not limited to, tires, belts, blades, and fuel system components with original Toro parts.
- Check brake operation frequently. Adjust and service as required.

Model 74675

Sound Pressure

This unit has a sound pressure level at the operator's ear of 89 dBA, which includes an Uncertainty Value (K) of 1 dBA.

Sound level was determined according to the procedures outlined in EN ISO 5395:2013.

Sound Power

This unit has a guaranteed sound power level of 100 dBA, which includes an Uncertainty Value (K) of 1 dBA.

Sound power level was determined according to the procedures outlined in ISO 11094.

Hand-Arm Vibration

Measured vibration level for right hand = 1.6 m/s^2

Measured vibration level for left hand = 1.6 m/s^2

Uncertainty Value (K) =0.8 m/s^2

Measured values were determined according to the procedures outlined in EN ISO 5395:2013.

Whole-Body Vibration

Measured vibration level = 0.60 m/s^2

Uncertainty Value (K) = 0.30 m/s^2

Measured values were determined according to the procedures outlined in EN ISO 5395:2013.

Model 74680

Sound Pressure

This unit has a sound pressure level at the operator's ear of 93 dBA, which includes an Uncertainty Value (K) of 1 dBA.

Sound level was determined according to the procedures outlined in EN ISO 5395:2013.

Sound Power

This unit has a guaranteed sound power level of 105 dBA, which includes an Uncertainty Value (K) of 1 dBA.

Sound power level was determined according to the procedures outlined in ISO 11094.

Hand-Arm Vibration

Measured vibration level for right hand = 1.7 m/s^2

Measured vibration level for left hand = 1.7 m/s^2

Uncertainty Value (K) = 0.8 m/s^2

Measured values were determined according to the procedures outlined in EN ISO 5395:2013.

Whole-Body Vibration

Measured vibration level = 0.48 m/s^2

Uncertainty Value (K) = 0.24 m/s^2

Measured values were determined according to the procedures outlined in EN ISO 5395:2013.

Slope Indicator

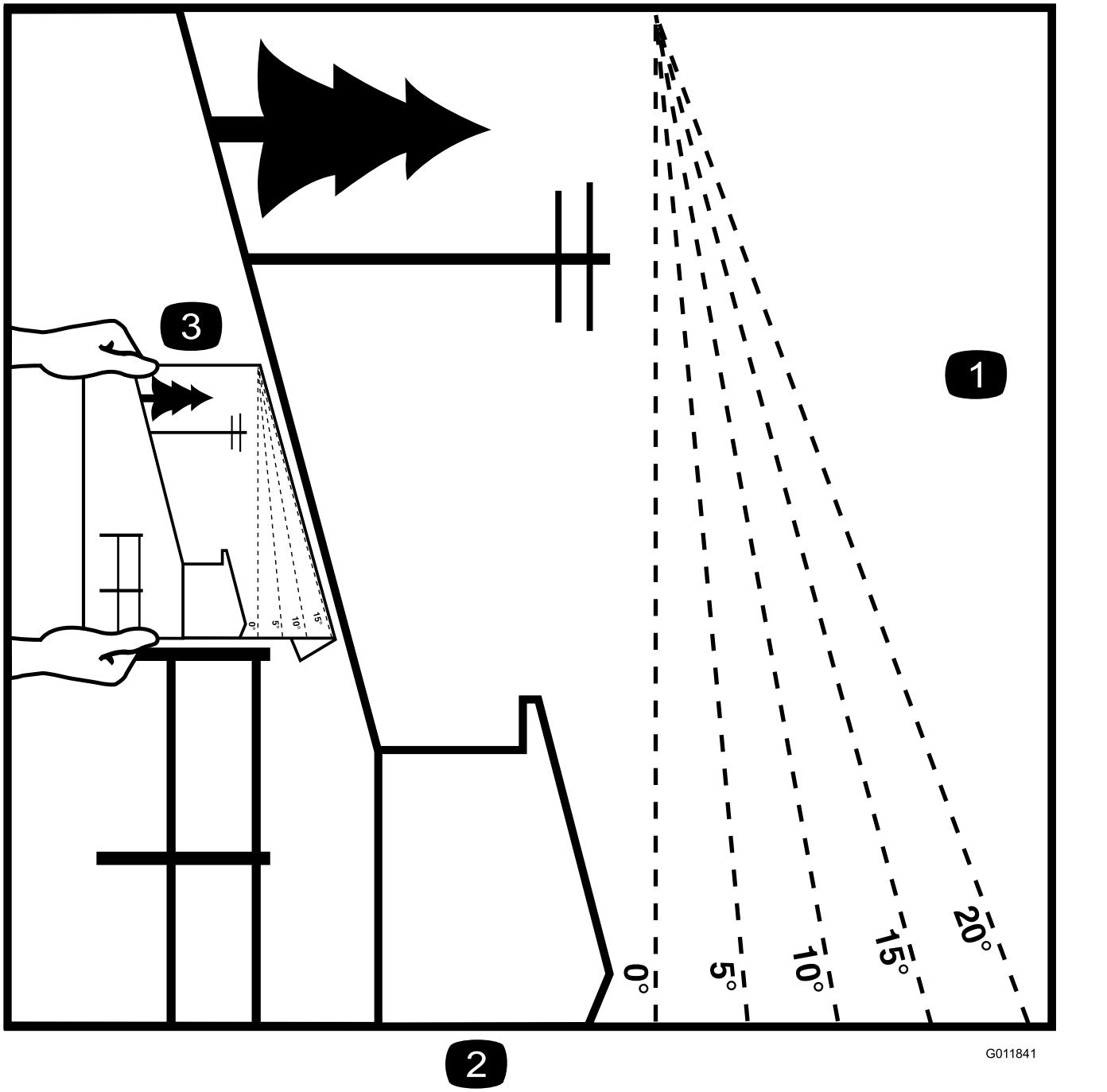

Figure 3

This page may be copied for personal use.

1. The maximum slope you can safely operate the machine on is **15 degrees**. Use the slope chart to determine the degree of slope of hills before operating. **Do not operate this machine on a slope greater than 15 degrees.** Fold along the appropriate line to match the recommended slope.
2. Align this edge with a vertical surface, a tree, building, fence pole, etc.
3. Example of how to compare slope with folded edge.

Safety and Instructional Decals

Safety decals and instructions are easily visible to the operator and are located near any area of potential danger. Replace any decal that is damaged or lost.



decal93-7009

93-7009

1. Warning—don't operate the mower with the deflector up or removed; keep the deflector in place.
2. Cutting/dismemberment hazard of hand or foot, mower blade—stay away from moving parts.

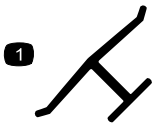

decaloemmarkt

Manufacturer's Mark

1. Indicates the blade is identified as a part from the original machine manufacturer.

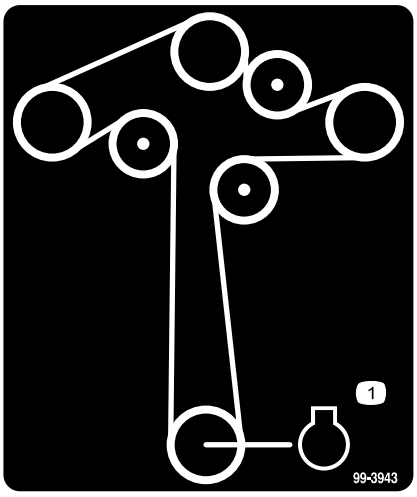

decal99-3943

99-3943

127 cm (50 inch) Models

1. Engine

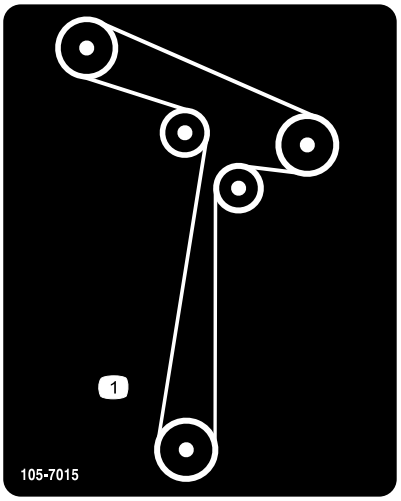

decal105-7015

105-7015

107 cm (42 inch) Models

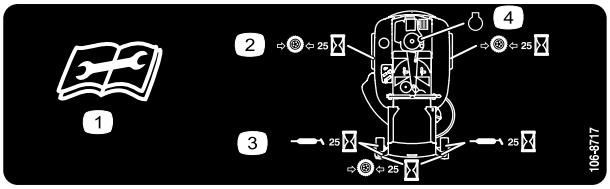

decal106-8717

106-8717

1. Read the instructions before servicing or performing maintenance.
2. Check tire pressure every 25 operating hours.
3. Grease every 25 operating hours.
4. Engine

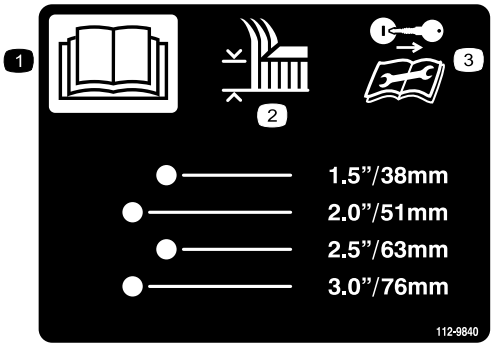

decal112-9840

112-9840

1. Read the *Operator's Manual*.
2. Height-of-cut
3. Remove the ignition key and read the instructions before servicing or performing maintenance.

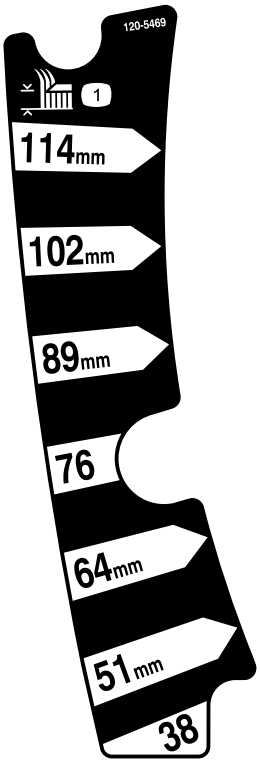

decal120-5469

120-5469

107 cm (42 inch) Models

1. Height-of-cut

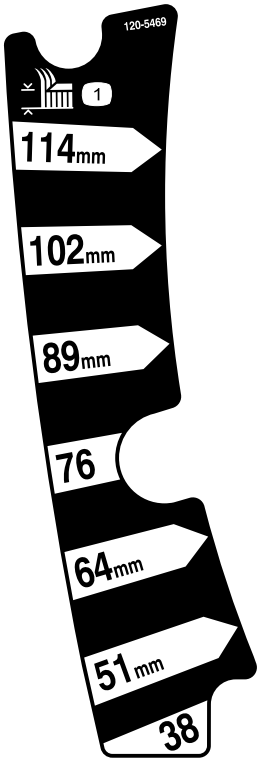

decal120-5469

120-5470

127 cm (50 inch) Models

1. Height-of-cut

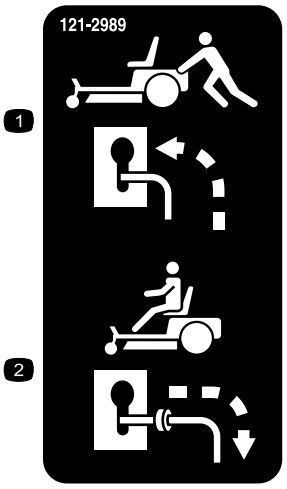

decal121-2989b

121-2989

1. Bypass lever position for pushing the machine
2. Bypass lever position for operating the machine



decalbatterysymbols

Battery Symbols

Some or all of these symbols are on your battery

1. Explosion hazard
2. No fire, open flame, or smoking.
3. Caustic liquid/chemical burn hazard
4. Wear eye protection
5. Read the *Operator's Manual.*
6. Keep bystanders a safe distance from the battery.
7. Wear eye protection; explosive gases can cause blindness and other injuries
8. Battery acid can cause blindness or severe burns.
9. Flush eyes immediately with water and get medical help fast.
10. Contains lead; do not discard.

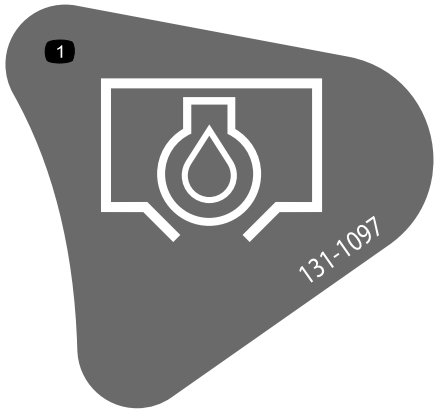

decal131-1097

131-1097

1. Oil drain

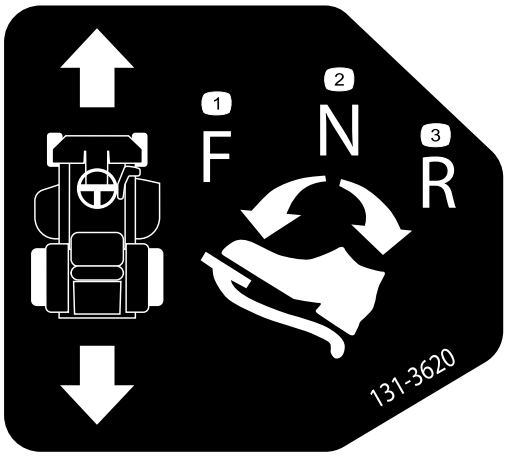

decal131-3620

131-3620

1. Pedal position—forward
2. Pedal position—neutral
3. Pedal position—reverse

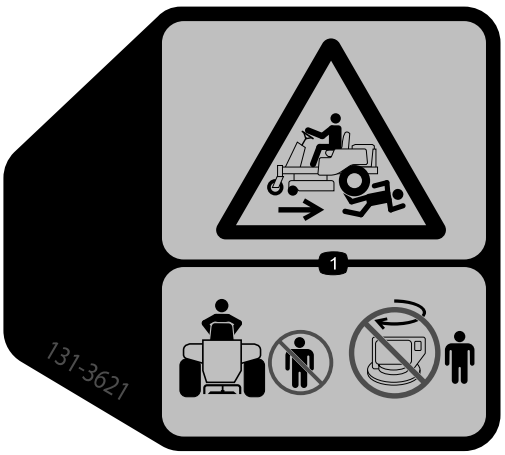

decal131-3621b

131-3621

1. Crushing/dismemberment hazard of bystanders—keep bystanders away from the machine; do not start the machine with bystanders nearby.



decal131-3664

131-3664

127 cm (50 inch) Models

1. Spinning blade
2. Reverse
3. *Operator's Manual*



decal131-3665

131-3665

107 cm (42 inch) Models

1. Blade spinning
2. Reverse
3. Read the *Operator's Manual*.



decal131-3954

131-3954

127 cm (50 inch) Models

1. On
2. Off



decal131-3955

131-3955

107 cm (42 inch) Models

1. On
2. Off

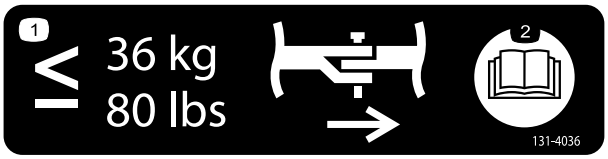

decal131-4036

131-4036

1. The maximum drawbar pull is 36 kg (80 lb).
2. Read the *Operator's Manual*.



decal132-6863

132-6863

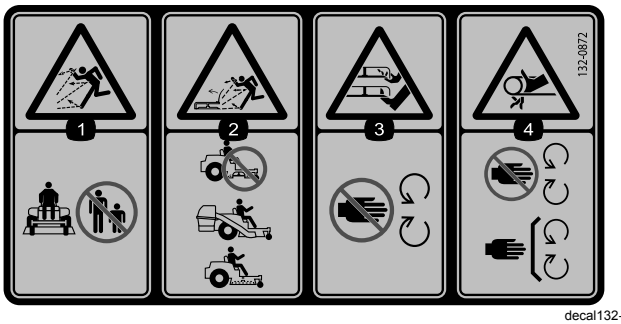

decal132-0872

132-0872

1. Thrown object hazard—keep bystanders away from the machine.
2. Thrown object hazard, raised baffle—do not operate the machine with an open deck; use a bagger or a baffle.
3. Severing hazard of hand or foot—keep away from moving parts.
4. Entanglement hazard—keep away from moving parts; keep all guards and shields in place.



decal132-0870

132-0870

1. Warning—read the *Operator's Manual*.
2. Cutting hazard of hand, mower blade; pinching hazard of hand, belt—keep hands and feet away from moving parts; keep all guards and shields in place.
3. Bodily harm hazard—no riders; look behind you when mowing in reverse.
4. Thrown object hazard—keep bystanders away from the machine; remove debris from the area before mowing; keep the deflector shield down.
5. Ramp tipping hazard—when loading onto a trailer, do not use dual ramps; only use a single ramp wide enough for the machine and that has an incline less than 15 degrees; back up the ramp (in reverse) and drive forward off the ramp.
6. Tipping hazard on slopes—do not make sharp, quick turns; do not use slopes greater than 15 degrees.

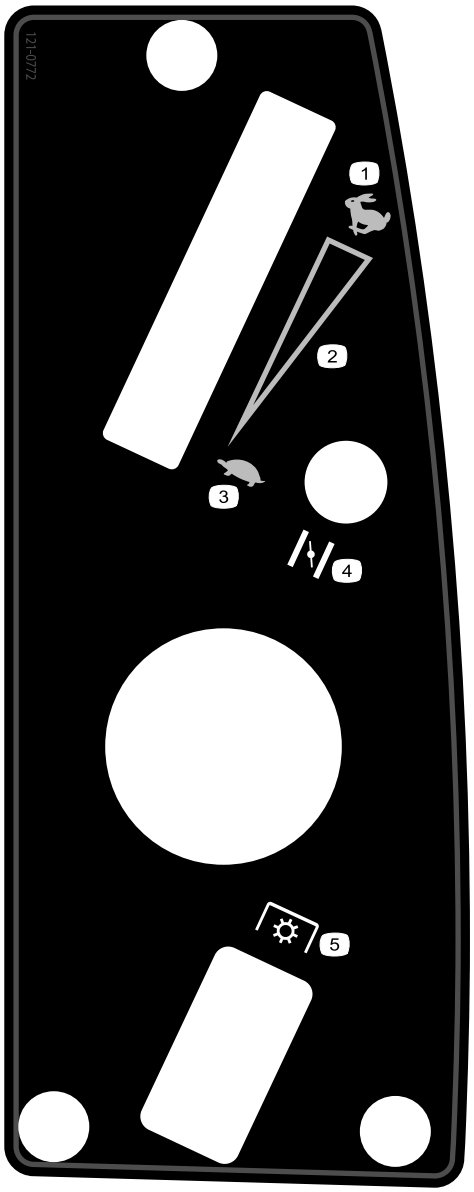

decal121-0772

121-0772

107 cm (42 inch) Models

1. Fast
2. Continuous-variable setting
3. Slow
4. Choke
5. Power take-off (PTO), blade-control switch

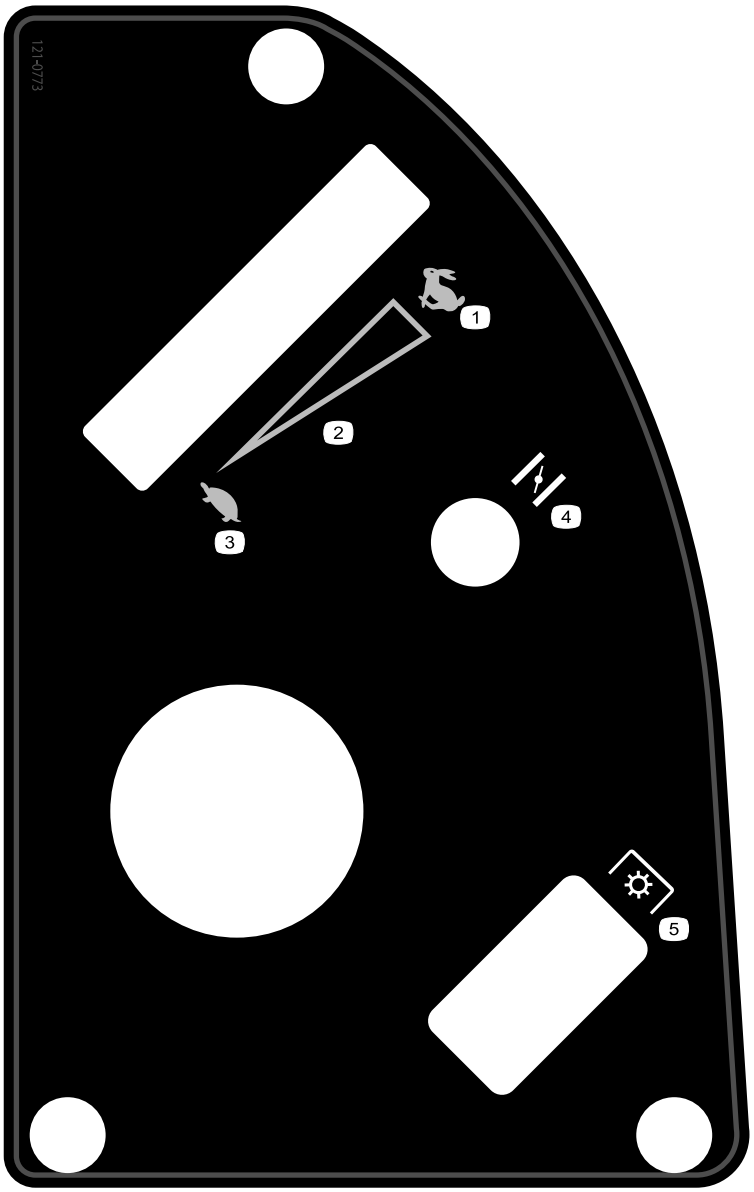

decal121-0773

121-0773

127 cm (50 inch) Models

1. Fast
2. Continuous-variable setting
3. Slow
4. Choke
5. Power take-off (PTO), blade-control switch

Product Overview

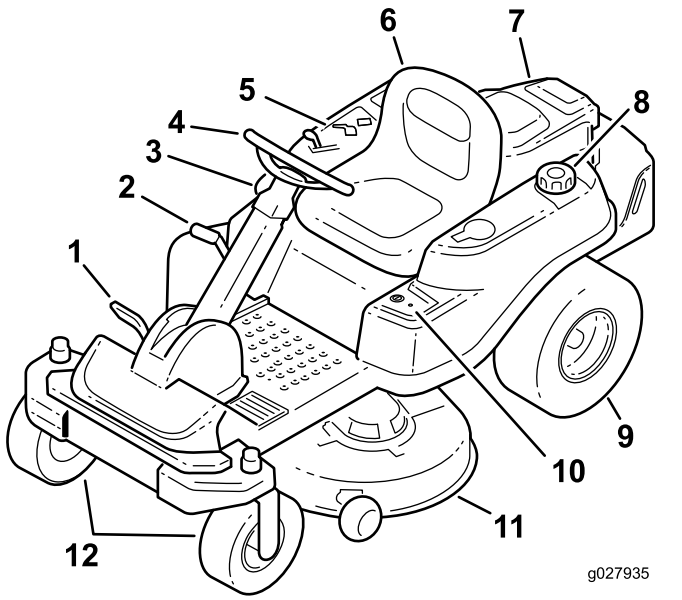

g027935

Figure 4

1. Traction-control pedal
2. Height-of-cut lever
3. SmartPark™ switch
4. Steering wheel
5. Control panel
6. Operator seat
7. Engine
8. Fuel-tank cap
9. Rear drive wheel
10. Key Choice® control
11. Mower deck
12. Front caster wheels

Controls

Become familiar with all controls in Figure 4 and Figure 5 before you start the engine and operate the machine.

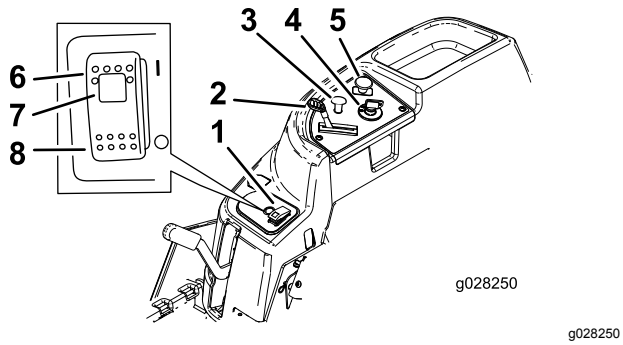

g028250

Figure 5

Control Panel

1. SmartPark™ Switch
2. Throttle
3. Choke
4. Ignition switch
5. Blade-control switch (power take-off)
6. Parking brake—On
7. Parking brake indicator light
8. Parking brake—Off

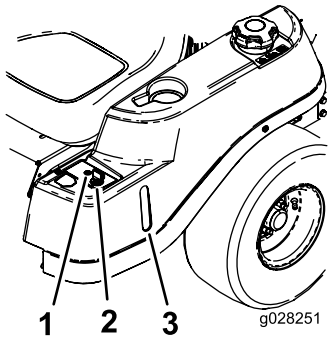

g028251

Figure 6

1. Operating–in–Reverse warning light
2. Key Choice key (blue in color)
3. Fuel-presence window

Ignition Switch

The ignition switch has 3 positions—Off, Run and Start. The key will turn to Start and move back to Run upon release. Turning the key to the OFF position will stop the engine; however, always remove the key when leaving the machine to prevent someone from accidentally starting the engine (Figure 5).

Choke Control

Use the choke to start a cold engine. Pull the choke knob up to engage it. Push down on the choke knob to disengage it (Figure 5).

Throttle Control

The throttle control is variable between FAST and SLOW. Moving the throttle lever forward will increase engine speed and moving the throttle lever to the rear will decrease the engine speed (Figure 5).

Blade-Control Switch (Power Take-off)

The blade-control switch, (PTO), engages and disengages power to the mower blades (Figure 5).

Fuel-Presence Window

The fuel window located on the left-hand side of the machine, can be used to verify the presence of gasoline in the tank (Figure 6).

Height-of-Cut Lever

The height-of-cut lever allows you to lower and raise the deck from the seated position. When you raise the lever (toward you), the deck is raised from the ground, and when you lower it (away from you), it lowers to

the ground. Adjust the height-of-cut only while the machine is not moving (Figure 14).

Key Choice® Switch

This switch allows you to mow in reverse when it is activated. To activate it, turn the switch to on and release it after the PTO is engaged. To deactivate it, disengage the power take-off (PTO) (Figure 6).

Operating–in–Reverse Warning Light

The Operating–in–Reverse warning light will illuminate whenever the KeyChoice key is used to deactivate the operating–in–reverse interlock. It is a reminder that the interlock system is deactivated. The light goes out whenever the PTO is disengaged or the engine is shut off. When the light is on, look behind and use extra caution when backing up.

SmartPark™ Switch

The parking brake is activated electronically.

Engage the parking brake by one of the following actions:

- Pressing the SmartPark™ switch to the ON position (Figure 5).
- The parking brake engages automatically when the operator leaves the seat and the traction control pedal is in the NEUTRAL position.
- The parking brake automatically engages 5 to 6 seconds after the ignition switch is turned to the OFF position (if not already engaged).

To disengage the parking brake, press the Smartpark switch to the OFF position with the key in the RUN position.

Operation

Note: Determine the left and right sides of the machine from the normal operating position.

Adding Fuel

- For best results, use only clean, fresh (less than 30 days old), unleaded gasoline with an octane rating of 87 or higher ((R+M)/2 rating method).
- **Ethanol**: Gasoline with up to 10% ethanol (gasohol) or 15% MTBE (methyl tertiary butyl ether) by volume is acceptable. Ethanol and MTBE are not the same. Gasoline with 15% ethanol (E15) by volume is not approved for use. **Never use gasoline that contains more than 10% ethanol by volume**, such as E15 (contains 15% ethanol), E20 (contains 20% ethanol), or E85 (contains up to 85% ethanol). Using unapproved gasoline may cause performance problems and/or engine damage which may not be covered under warranty.
- **Do not** use gasoline containing methanol.
- **Do not** store fuel either in the fuel tank or fuel containers over the winter unless a fuel stabilizer is used.
- **Do not** add oil to gasoline.

⚠ DANGER

In certain conditions, gasoline is extremely flammable and highly explosive. A fire or explosion from gasoline can burn you and others and can damage property.

- **Fill the fuel tank outdoors, in an open area, when the engine is cold. Wipe up any gasoline that spills.**
- **Never fill the fuel tank inside an enclosed trailer.**
- **Do not fill the fuel tank completely full. Add gasoline to the fuel tank until the level is 6 to 13 mm (1/4 to 1/2 inch) below the bottom of the filler neck. This empty space in the tank allows gasoline to expand.**
- **Never smoke when handling gasoline, and stay away from an open flame or where gasoline fumes may be ignited by a spark.**
- **Store gasoline in an approved container and keep it out of the reach of children. Never buy more than a 30-day supply of gasoline.**
- **Do not operate without entire exhaust system in place and in proper working condition.**

⚠ DANGER

In certain conditions during fueling, static electricity can be released, causing a spark that can ignite the gasoline vapors. A fire or explosion from gasoline can burn you and others and can damage property.

- **Always place gasoline containers on the ground away from your vehicle before filling.**
- **Do not fill gasoline containers inside a vehicle or on a truck or trailer bed, because interior carpets or plastic truck bed liners may insulate the container and slow the loss of any static charge.**
- **When practical, remove gas-powered equipment from the truck or trailer and refuel the equipment with its wheels on the ground.**
- **If this is not possible, then refuel such equipment on a truck or trailer from a portable container rather than from a gasoline-dispenser nozzle.**
- **If you must use a gasoline-dispenser nozzle, keep the nozzle in contact with the rim of the fuel tank or container opening at all times until fueling is complete.**

⚠ WARNING

Gasoline is harmful or fatal if swallowed. Long-term exposure to vapors can cause serious injury and illness.

- **Avoid prolonged breathing of vapors.**
- **Keep face away from nozzle and gas tank or conditioner bottle opening.**
- **Avoid contact with skin; wash off spills with soap and water.**

Using Stabilizer/Conditioner

Use a fuel stabilizer/conditioner in the machine to provide the following benefits:

- Keeps gasoline fresh during storage of 90 days or less. For longer storage it is recommended that the fuel tank be drained.
- Cleans the engine while it runs
- Eliminates gum-like varnish buildup in the fuel system, which causes hard starting

Important: **Do not use fuel additives containing methanol or ethanol.**

Add the correct amount of gasoline stabilizer/conditioner to the gasoline.

Note: A fuel stabilizer/conditioner is most effective when mixed with fresh gasoline. To minimize the chance of varnish deposits in the fuel system, use fuel stabilizer at all times.

Filling the Fuel Tank

Note: Ensure that the engine is shut off and the motion controls are in the parked position.

Note: You can use the fuel window to verify the presence of gasoline before filling the tank (Figure 7).

Important: **Do not overfill fuel tank. Fill the fuel tank to the bottom of the filler neck. The empty space in the tank allows the fuel to expand. Overfilling may result in fuel leakage, damage to the engine, or damage to the emissions system.**

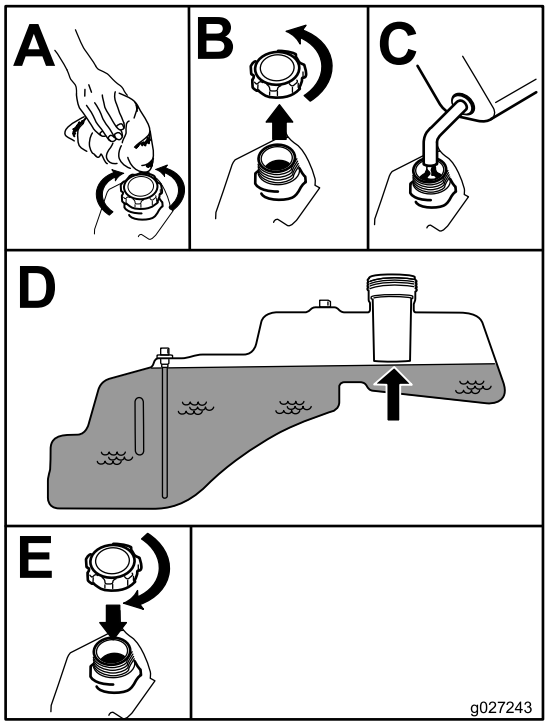

g027243

Figure 7

Checking the Engine-Oil Level

Before you start the engine and use the machine, check the oil level in the engine crankcase; refer to Checking the Engine-Oil Level (page 36).

Breaking in a New Machine

New engines take time to develop full power. Mower decks and drive systems have higher friction when new, placing additional load on the engine. Allow 40 to 50 hours of break-in time for new machines to develop full power and best performance.

Think Safety First

Please carefully read all of the safety instructions and decals in the safety section. Knowing this information could help you, your family, pets, or bystanders avoid injury.

⚠ DANGER

Operating the machine on wet grass or steep slopes can cause sliding and loss of control.

- **Do not operate on slopes greater than 15 degrees.**
- **Reduce speed and use extreme caution on slopes.**
- **Do not operate the machine near water.**

⚠ DANGER

Wheels dropping over edges can cause rollovers, which may result in serious injury, death, or drowning.

Do not operate the machine near drop-offs.

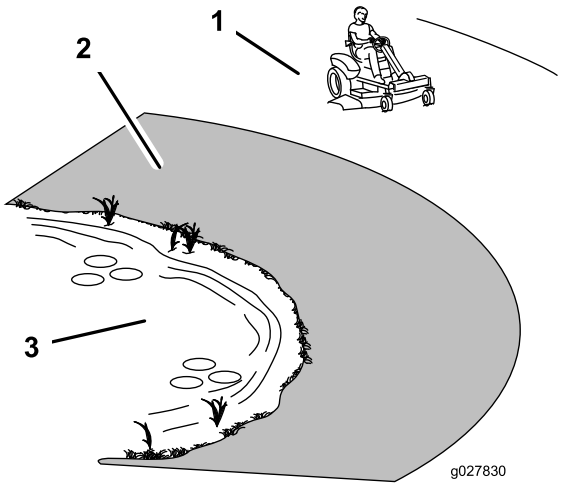

g027830

Figure 8

1. Safe zone—use the TimeCutter here
2. Use a walk-behind mower and/or hand trimmer near drop-offs and water.
3. Water

⚠ CAUTION

This machine produces sound levels in excess of 85 dBA at the operators ear and can cause hearing loss through extended periods of exposure.

Wear hearing protection when operating this machine.

The use of protective equipment for eyes, ears, feet, and head is recommended.

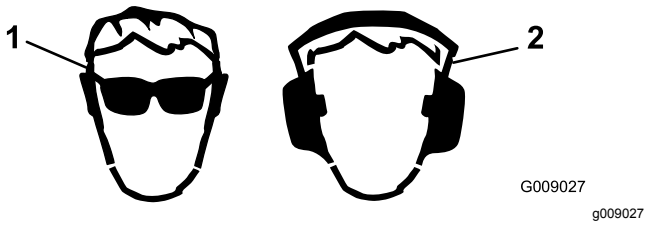

Figure 9

1. Wear safety glasses
2. Wear hearing protection

Understanding the Safety-Interlock System

⚠ WARNING

If safety-interlock switches are disconnected or damaged, the machine could operate unexpectedly causing personal injury.

- **Do not tamper with the interlock switches.**
- **Check the operation of the interlock switches daily, and replace any damaged switches before operating the machine.**

The safety-interlock system is designed for the following:

- To prevent the engine from starting unless the traction pedal is in the NEUTRAL position.
- To automatically ensure that the parking brake is engaged and the PTO is off when starting.
- To stop the engine whenever the traction pedal is not in the NEUTRAL position and you rise from the seat.
- To automatically engage the parking brake and disengage the PTO, when you rise out of the seat with the traction pedal in the NEUTRAL position.
- To stop the engine whenever the parking brake is not engaged and you rise from the seat.

Testing the Safety-Interlock System

1. Sit in the seat with the engine off and ensure that the PTO switch is in the OFF position.
2. Turn the ignition key to the START position; the starter should crank. Do not start the engine or turn the engine off prior to step 3.
3. Turn the key to the ON position and push the SmartPark switch to the OFF position. The brake should disengage and the brake light should turn off.
4. With the brake disengaged and traction pedal in the NEUTRAL position, turn the ignition switch to the START position. The brake should automatically engage, the engine should crank, and the brake light will turn on.
5. With the engine off and the key in the ON position, engage the PTO by pulling up the blade-control switch, you should hear the clutch engage.
6. Ensure that the traction pedal is in neutral and turn the ignition switch to the START position. The PTO should disengage and the engine should crank and start without the blades moving.

7. With the engine running, rise from the seat. The engine should remain running and the brake light will be on.
8. Return to the seat and disengage the parking brake by pushing the SmartPark switch to the OFF position. The engine should continue to run.
9. Rise from the seat again. The brake should automatically engage and the engine will continue to run.
10. Return to the seat and engage the blades by pulling up on the blade-control switch.
11. Rise from the seat. The blades should disengage and the engine will continue to run.
12. Return to the seat and pull up the blade-control switch. The blades should engage. Disengage the blades by pushing down the blade-control switch.
13. Pull up the blade-control switch to engage the blades. Move the traction pedal to the REVERSE position. The blades should disengage. Move the traction pedal to the NEUTRAL position.
14. Pull up the blade-control switch to engage the blades. Turn the Key Choice switch to the ON position and release it. The operating-in-reverse light should illuminate.
15. Move the traction pedal to the REVERSE position. The blades should remain engaged. Push the blade-control switch in to disengage the blades. The operating-in-reverse light should turn off. Move the traction pedal to the NEUTRAL position.
16. If not engaged, push the SmarkPark switch to the ON position and lightly tap the traction pedal in the either the FORWARD or REVERSE position. The brake should disengage and the brake light should turn off.

    Note: Tap the pedal, do not fully engage the pedal as that will cause the brake system to bind and not release.
17. With the brake released, engage the traction pedal slightly and rise from the seat. The engine should kill.
18. Return to the seat and turn the ignition key to the OFF position. After several seconds, the brake system should engage.

    Note: With the key in the OFF position, the brake light will not illuminate.

Starting the Engine

Important: **Do not engage the starter for more than 5 seconds at a time. Engaging the starter motor for more than 5 seconds can damage the starter motor. If the engine fails to start, wait 10 seconds before operating the engine starter again.**

Sit down on the seat and ensure the parking brake is set (Figure 10).

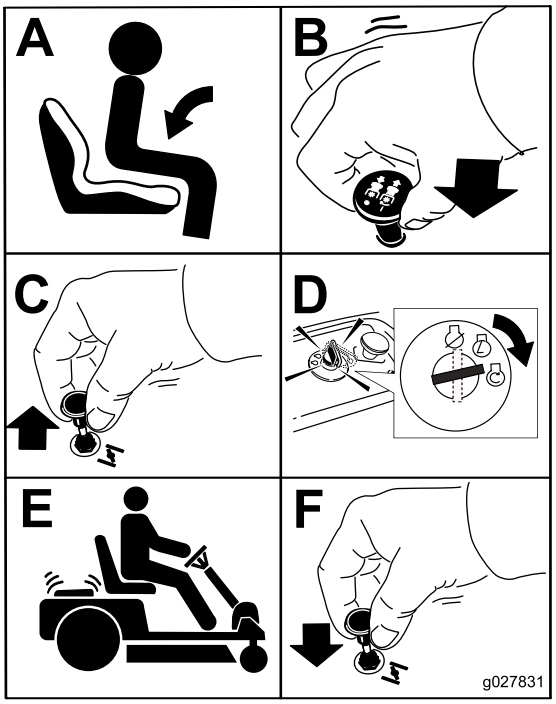

g027831

Figure 10

Operating the SmartPark™ Parking Brake

The parking brake is activated electronically.

Engage the parking brake by one of the following actions:

- Pressing the SmartPark™ switch to the ON position (Figure 5).
- The parking brake engages automatically when the operator leaves the seat and the traction control pedal is in the NEUTRAL position.
- The parking brake automatically engages 5 to 6 seconds after the ignition switch is turned to the OFF position (if not already engaged).

Disengage the parking brake by one of the following actions:

- Tap the traction-control pedal forward or reverse.
- Pressing the brake switch to the OFF position (Figure 5).

Operating the Blades

The blade control switch engages and disengages power to the mower blades. This switch controls power to any attachments that draw power from the engine, including the mower deck and cutting blades.

Engaging the Blades

Important: **Do not engage the blades when parked in tall grass. Belt or clutch damage can occur.**

Note: Always engage the blades with the throttle in the FAST position.

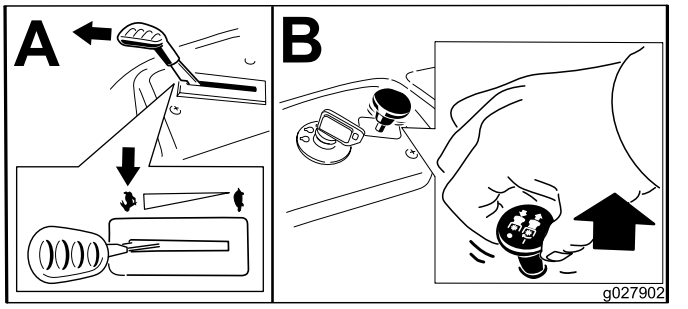

g027902

Figure 11

Disengaging the Blades

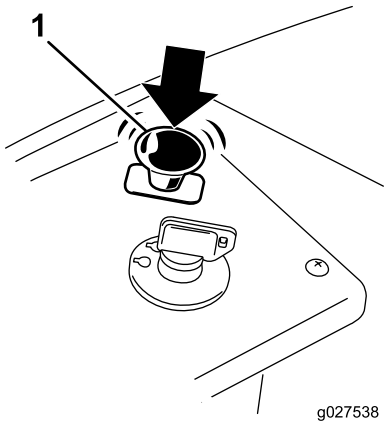

g027538

Figure 12

1. Power take-off (PTO) switch

Stopping the Engine

1. Disengage the blades by pushing the blade-control switch to OFF (Figure 12).
2. Move the throttle lever to the FAST position.
3. Turn the ignition key to OFF and remove the key.

Driving the Machine

This machine has the characteristics of both a garden tractor and a zero-turn machine. Like a garden tractor, the machine has a foot pedal that controls the forward and reverse motion along with the speed, and it has a steering wheel that controls the direction and the turning radius. Like a zero-turn machine, the rear drive wheels operate independently of each other, enabling you to make sharp turns and to turn in different directions quickly. These characteristics vastly improve the maneuverability of the machine, but they may also require you to practice driving if you are unfamiliar with this type of machine.

⚠ WARNING

The machine can spin very rapidly. The operator may lose control of the machine and cause personal injury or damage to the machine.

- **Use caution when making turns.**
- **Slow the machine down before making sharp turns.**

The throttle control regulates the engine speed as measured in rpm (revolutions per minute). Placing the throttle control in the FAST position can be best for performance. For most applications, operating in the FULL-THROTTLE position is desirable.

Driving Forward or Backward

1. Move the throttle to the FAST position.
2. Release the parking brake. Refer to Operating the SmartPark™ Parking Brake (page 21).
3. Place your foot onto the traction-control pedal and slowly press the top of the pedal to go forward, or press on the bottom of the pedal to move backward (Figure 13).

   Note: The farther you move the pedal in either direction, the faster the machine will move in that direction.

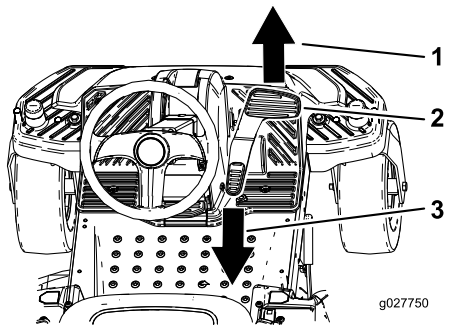

g027750

Figure 13

1. Forward
2. Traction-control pedal
3. Backward

4. To slow down, release the pressure on the traction-control pedal.

Stopping the Machine

To stop the machine, release the traction-control pedal, disengage the blade-control switch, ensure the throttle is in the FAST position, set the parking brake and turn the ignition key to off.

Note: Remember to remove the key from the ignition switch.

⚠ WARNING

Children or bystanders may be injured if they move or attempt to operate the mower while it is unattended.

Always remove both the ignition and KeyChoice keys and set the parking brake when leaving the machine unattended, even if just for a few minutes.

Mowing in Reverse

The machine has an interlock feature that prevents the mower deck from mowing while the machine is traveling in reverse. If you shift into reverse with the PTO engaged, the PTO will stop. If you need to mow while in reverse gear, you can temporarily deactivate this interlock.

Note: Do not mow while backing up unless it is absolutely necessary.

⚠ DANGER

A child or bystander could be backed over by a riding mower with blades engaged and cause serious personal injury or death.

- **Do not mow in reverse unless absolutely necessary.**
- **Always look backward and down before backing up.**
- **Use the KeyChoice switch only if you are certain no children or other bystanders will appear in the mowing area.**
- **Always remove both the ignition and KeyChoice keys and put them in a safe place out of the reach of children or unauthorized users when leaving the unit unattended.**

If you are certain that you can safely mow or operate an attachment in reverse, complete the following procedure:

1. Insert the KeyChoice key into the KeyChoice switch (Figure 6).
2. Engage the PTO.
3. Turn the KeyChoice key clockwise until it stops and release it.

   Note: A red light illuminates on the console to serve as a reminder that the interlock has been deactivated.
4. Perform the mowing.
5. When finished mowing, remove the KeyChoice key (Figure 6).

   Note: Once you deactivate the interlock, it stays in this mode—with your mower blade or PTO powered attachment operating whenever you back up—and the console light stays on until you either disengage the PTO or turn off the engine.

Adjusting the Height-of-Cut

Note: The transport position is the highest height-of-cut position or cutting height 115 mm (4.5 inches) as shown in Figure 14.

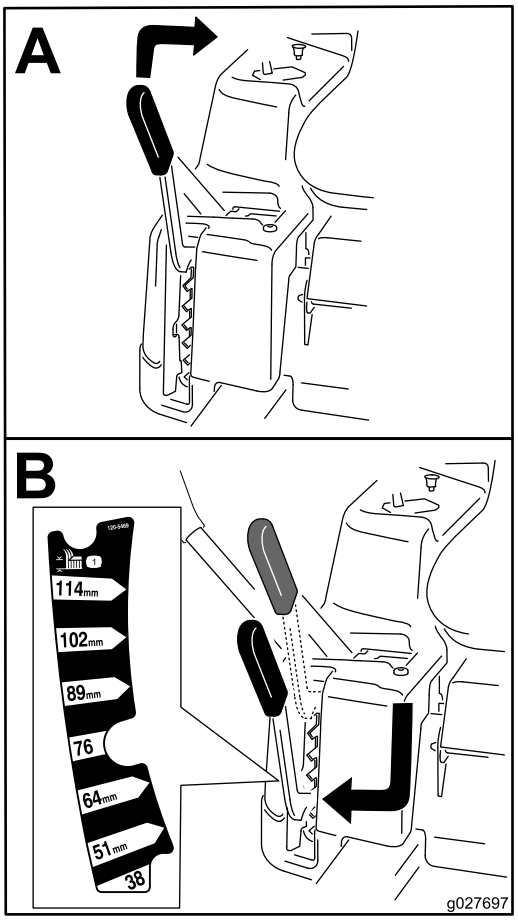

g027697

Figure 14

Positioning the Seat

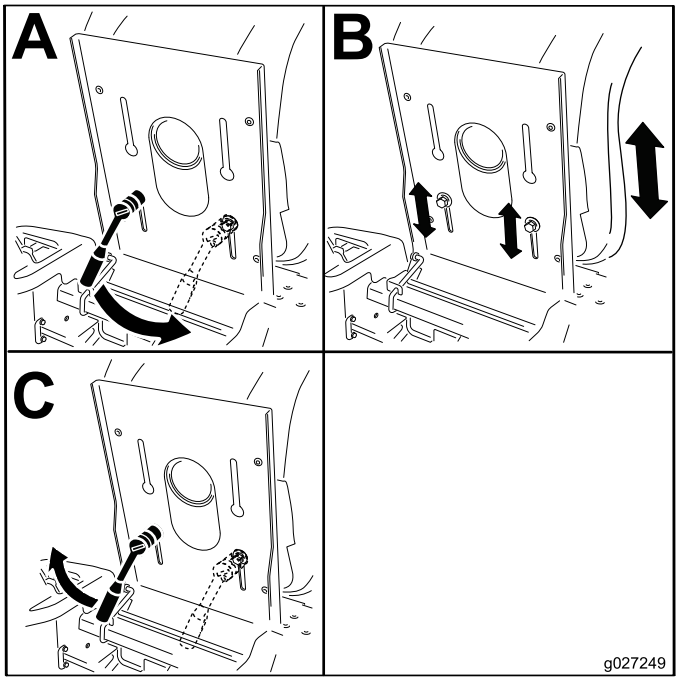

g027249

Figure 15

Positioning the Steering Wheel

The steering wheel has 3 positions for operation and one, full-up position. Use the full-up position for stepping on and off the machine and getting out of the seat. When operating the machine, position the steering wheel where you have the best control of the machine and are most comfortable.

1. Press your foot onto the steering-column release lever.
2. Position the steering wheel to the desired position (Figure 16).

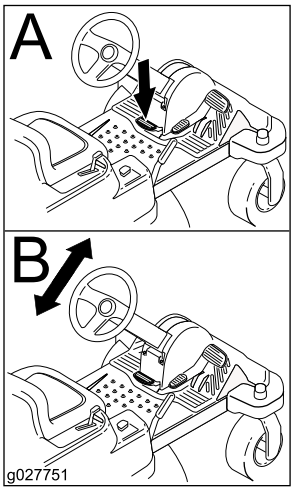

g027751

Figure 16

Adjusting the Anti-scalp Rollers

107 cm (42-inch) Mower Decks Only

Whenever you change the height-of-cut, it is recommended to adjust the height of the anti-scalp rollers.

Note: Adjust the anti-scalp rollers so the rollers do not touch the ground in normal, flat mowing areas.

1. Disengage the blade-control switch (PTO) and ensure the parking brake is engaged.
2. Stop the engine, remove the key, and wait for all moving parts to stop before leaving the operating position.
3. Adjust the anti-scalp rollers to one of the following positions:

- Upper hole—use this position with the mower deck in the 63 mm (2-1/2 inches) and below the height-of-cut positions (Figure 17).
- Lower hole—use this position with the mower deck in the 76 mm (3 inches) and above the height-of-cut positions (Figure 17).

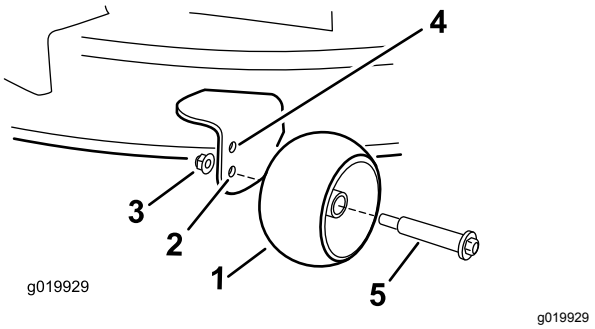

Figure 17

1. Anti-scalp roller
2. Lower hole—the mower deck in the 76 mm (3 inches) and above the height-of-cut positions
3. Flange nut
4. Upper hole—the mower deck in the 63 mm (2-1/2 inches) and below the height-of-cut positions
5. Bolt

Adjusting the Anti-scalp Rollers

127 cm (50-inch) Mower Decks Only

Whenever you change the height-of-cut, it is recommended to adjust the height of the anti-scalp rollers.

Note: Adjust the anti-scalp rollers so the rollers do not touch the ground in normal, flat mowing areas.

1. Disengage the blade-control switch (PTO) and ensure the parking brake is engaged.
2. Stop the engine, remove the key, and wait for all moving parts to stop before leaving the operating position.
3. Adjust the anti-scalp rollers (Figure 18) to match the closest height-of-cut position.

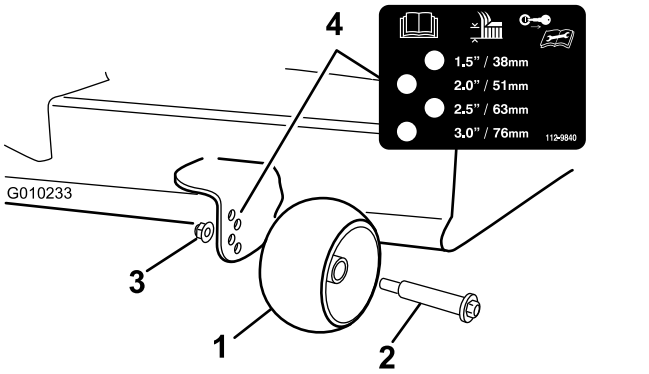

Figure 18

1. Anti-scalp roller
2. Bolt
3. Flange nut
4. Hole spacing

Pushing the Machine by Hand

Important: **Always push the machine by hand. Do not tow the machine, because damage may occur.**

This machine has an electric-brake mechanism, and to push the machine, the ignition key needs to be in the RUN position. The battery needs to be charged and functioning for the electric brake to be disengage.

Pushing the Machine

1. Park the machine on a level surface, and disengage the blade-control switch.
2. Set the parking brake, stop the engine, and wait for all moving parts to stop before leaving the operating position.
3. Locate the bypass levers on the frame on both sides of the engine.
4. Move the bypass levers forward through the key hole and down to lock them in place (Figure 19).

   Note: Ensure this is done for each lever.
5. Turn the ignition key on and disengage the parking brake.

   Note: Do not start the machine.

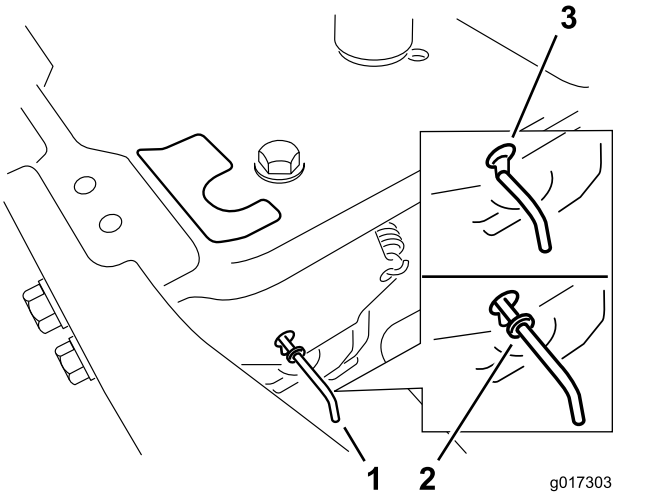

Figure 19

1. Bypass-lever locations
2. Lever position for operating the machine
3. Lever position for pushing the machine

6. When finished, ensure that the key has been returned to the STOP position to avoid draining the battery charge.

Note: If the machine fails to move, the electric brake may still be engaged. If necessary, the electric brake can be released manually; refer to Releasing the Electric Brake (page 44).

Operating the Machine

Move the bypass levers rearward through the key hole and down to lock them in place as shown in Figure 19.

Note: Ensure that the bypass levers are pull rearward the full length of travel.

Converting to Side Discharge

107 cm (42-inch) Mower Decks Only

The mower deck and mower blades shipped with this machine were designed for optimum mulching and side discharge performance.

Removing the Discharge Cover for the Side Discharge

1. Park the machine on a level surface and disengage the blade-control switch.
2. Ensure the parking brake is engaged, stop the engine, remove the key, and wait for all moving parts to stop before leaving the operating position.
3. Remove the 2 bolts and nuts that secure the discharge cover to the mower (Figure 20).

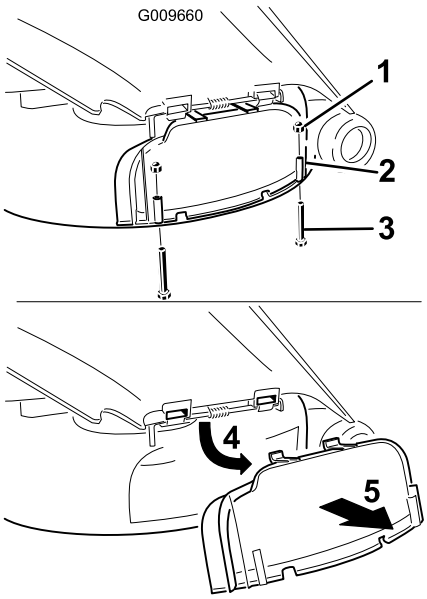

Figure 20

1. Cap nut (1/4 inch)
2. Discharge cover
3. Bolt (1/4 x 2-1/2 inches)
4. Rotate the cover up
5. Remove the cover

4. Remove the discharge cover.
5. Lift up the grass deflector, and locate the lock nut on the deflector pivot rod.
6. Remove the existing thin nut (3/8 inch).
7. Install the cutoff baffle to the exposed pivot rod (Figure 21).

   Note: Use the existing thin nut (3/8 inch) to secure the baffle to the mower.

Note: The cutoff baffle was shipped with the machine as a loose part.

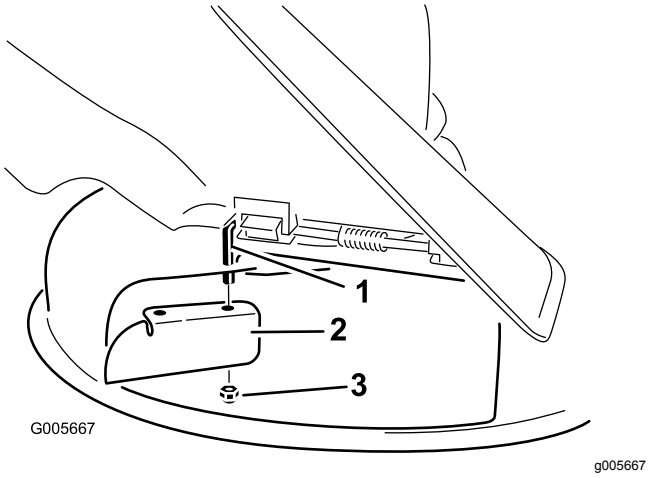

Figure 21

1. Pivot rod
2. Cutoff baffle (originally shipped with the machine)
3. Existing thin nut (3/8 inch)

8. Torque the fastener to 7-9 N·m (14-18 ft-lb).
9. Lower the grass deflector over the discharge opening

Important: **Ensure that the mower has a hinged grass deflector that disperses clippings to the side and down toward the turf, while in side-discharge mode.**

Installing the Discharge Cover for Mulching

1. Park the machine on a level surface and disengage the blade-control switch.
2. Ensure the parking brake is engaged, stop the engine, remove the key, and wait for all the moving parts to stop before leaving the operating position.
3. Remove the cutoff baffle from the mower deck (Figure 21).
4. Lift the grass deflector and slide the tabs on top of the discharge cover under the grass deflector retaining rod.
5. Rotate the discharge cover down over the opening, and onto the lower lip of the mower (Figure 22).

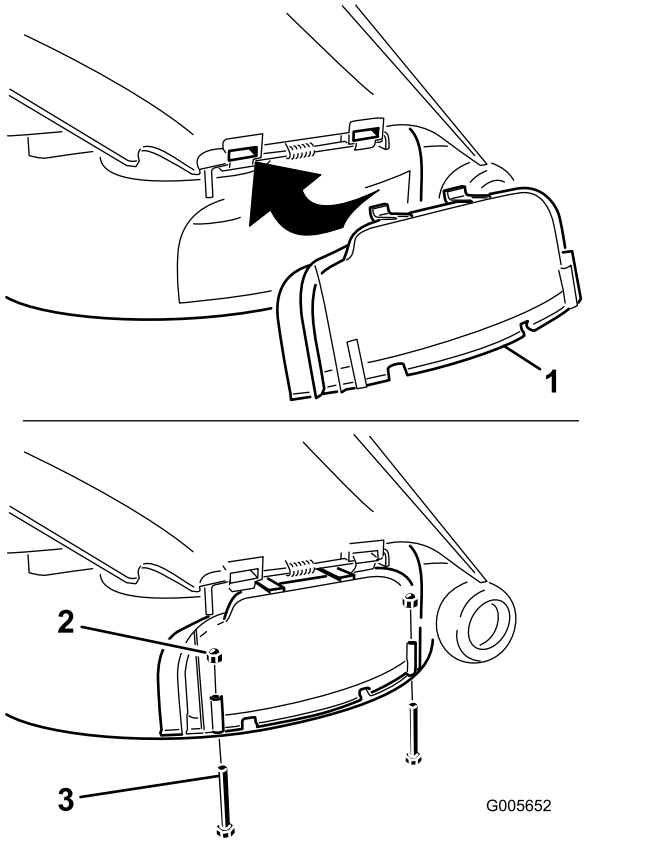

Figure 22

1. Discharge cover
2. Cap nut (1/4 inch)
3. Bolt (1/4 x 2-1/2 inches)

6. Secure the discharge cover to the lower lip of the mower with 2 bolts (1/4 x 2-1/2 inches) and 2 cap nuts (1/4 inch) as shown in Figure 22.

   Note: Do not overtighten the nuts; this could distort the cover and cause blade contact.

Converting to Side Discharge (for models with)

127 cm (50-inch) Mower Decks Only

The mower deck and mower blades shipped with this machine were designed for optimum mulching and side discharge performance.

Removing the Right Baffle for Side Discharge

1. Park the machine on a level surface and disengage the blade-control switch.

2. Ensure the parking brake is engaged, stop the engine, remove the key, and wait for all moving parts to stop before leaving the operating position.
3. Remove the right mower blade; refer to Removing the Blades (page 47).
4. Remove the 2 knobs and curved washers that secure the right baffle to the mower (Figure 23).

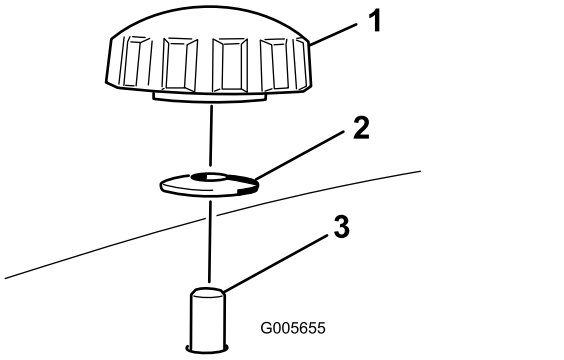

Figure 23

1. Knob
2. Curved washer
3. Baffle stud coming through the mower

5. Remove the right baffle and lower the grass deflector over the discharge opening as shown in Figure 23 and Figure 24.

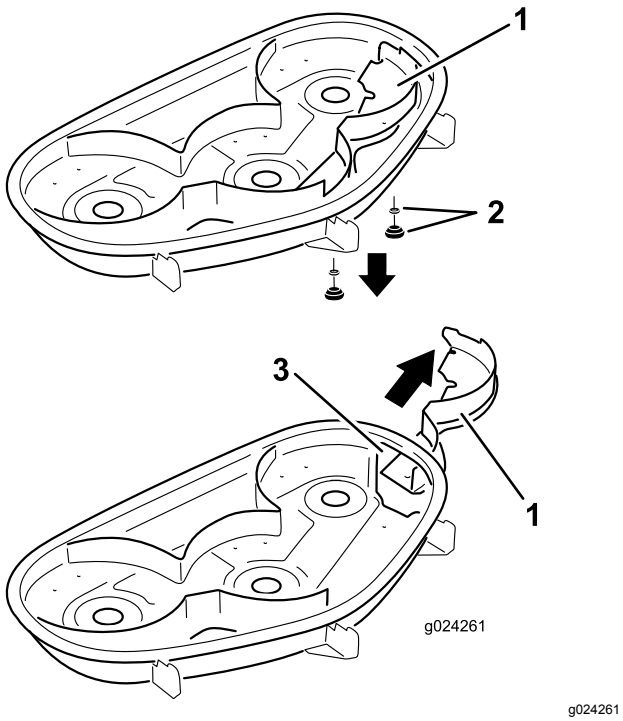

Figure 24

1. Right baffle
2. Curved washer and knob
3. Discharge opening

6. Install fasteners into the holes in the top of the mower to prevent flying debris.

⚠ WARNING

Open holes in the mower expose you and others to thrown debris which can cause severe injury.

- **Never operate the mower without hardware mounted in all holes in the mower housing.**
- **Install the hardware in the mounting holes when you remove the mulching baffle.**

7. Install the right mower blade; refer to Installing the Blades (page 48).
8. Lift up the grass deflector. Install 2 bolts (5/16 x 3/4 inch) to the 2 holes along the deck cutout.
9. Install the cutoff baffle to the mower deck (Figure 25).

Note: Use the 2 locknuts (5/16 inch) to secure the baffle to the mower deck.

Note: The cutoff baffle was shipped with the machine as a loose part.

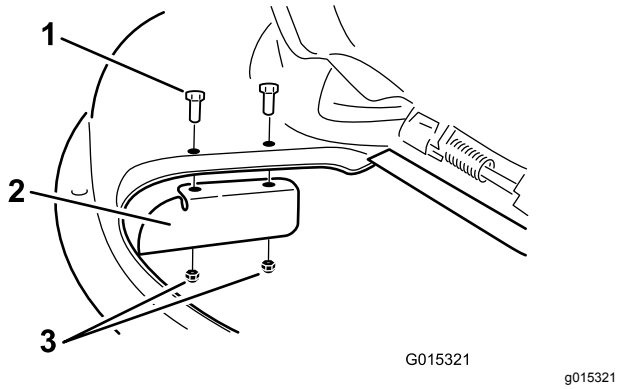

Figure 25

1. Bolt (5/16 x 3/4 inch)
2. Cutoff baffle
3. Locknut (5/16 inch)

10. Torque the fasteners to 7-9 N·m (14-18 ft-lb).
11. Lower the grass deflector over the discharge opening.

Important: **Ensure that the mower has a hinged grass deflector that disperses clippings to the side and down toward the turf, while in side discharge mode.**

Installing the Right Baffle for Mulching

1. Park the machine on a level surface and disengage the blade-control switch.
2. Ensure the parking brake is engaged, stop the engine, remove the key, and wait for all moving parts to stop before leaving the operating position.
3. Remove the cutoff baffle from the mower deck (Figure 25).
4. Remove the right mower blade; refer to Removing the Blades (page 47).
5. Slide the right baffle under the mower deck, and secure it using 2 knobs and the curved washers (cupped side facing the mower) as shown in Figure 23 and Figure 24.

   Important: **Ensure that the tab on the far right side of the right baffle is outside of the mower and is flush with the mower wall.**
6. Install the right mower blade; refer to Installing the Blades (page 48).

Transporting the Machine

Use a heavy-duty trailer or truck to transport the machine. Ensure that the trailer or truck has all necessary brakes, lighting, and marking as required by law. Please carefully read all the safety instructions. Knowing this information could help you, your family, pets, or bystanders avoid injury.

⚠ WARNING

Driving on the street or roadway without turn signals, lights, reflective markings, or a slow moving vehicle emblem is dangerous and can lead to accidents causing personal injury.

Do not drive machine on a public street or roadway.

To transport the machine:

1. If using a trailer, connect it to the towing vehicle and connect the safety chains.
2. If applicable, connect the trailer brakes.
3. Load the machine onto the trailer or truck.
4. Stop the engine, remove the key, set the brake, and close the fuel valve.
5. Tie down the machine near the front caster wheels and the rear bumper (Figure 26).

   Note: Avoid the steering components and mower deck parts when tying down the machine at the front caster wheels.

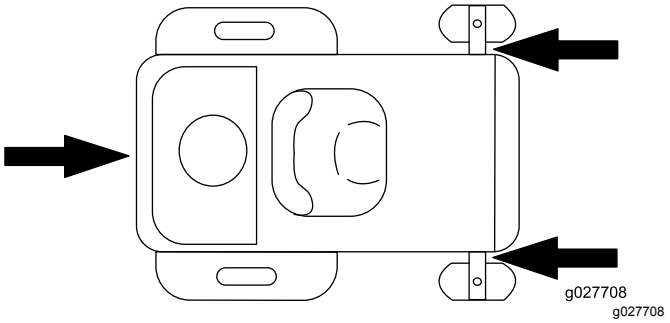

Figure 26

Loading the Machine

Use extreme caution when loading or unloading machines onto a trailer or a truck. Use a full-width ramp that is wider than the machine for this procedure. Back up ramps and drive forward down ramps (Figure 27).

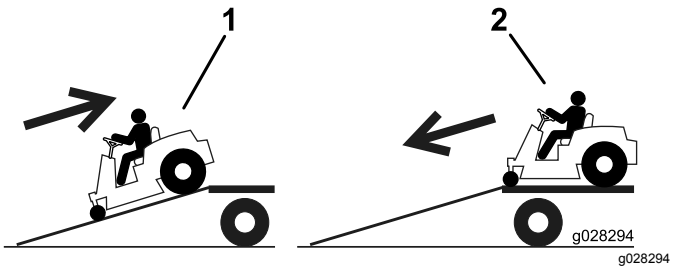

Figure 27

1. Back up ramps
2. Drive forward down ramps

Important: **Do not use narrow individual ramps for each side of the machine.**

Ensure the ramp is long enough so that the angle with the ground does not exceed 15 degrees (Figure 28). On flat ground, this requires a ramp to be at least four times (4X) as long as the height of the trailer or truck bed to the ground. A steeper angle may cause mower components to get caught as the unit moves from the ramp to the trailer or truck. Steeper angles may also cause the machine to tip or lose control. If loading on or near a slope, position the trailer or truck so that it is on the down side of the slope and the ramp extends up the slope. This will minimize the ramp angle.

⚠ WARNING

Loading a machine onto a trailer or truck increases the possibility of tip-over and could cause serious injury or death.

- **Use extreme caution when operating a machine on a ramp.**
- **Use only a full-width ramp; do not use individual ramps for each side of the machine.**
- **Do not exceed a 15-degree angle between the ramp and the ground or between the ramp and the trailer or truck.**
- **Ensure the length of ramp is at least four times (4X) as long as the height of the trailer or truck bed to the ground. This will ensure that ramp angle does not exceed 15 degrees on flat ground.**
- **Back up ramps and drive forward down ramps.**
- **Avoid sudden acceleration or deceleration while driving the machine on a ramp as this could cause a loss of control or a tip-over situation.**

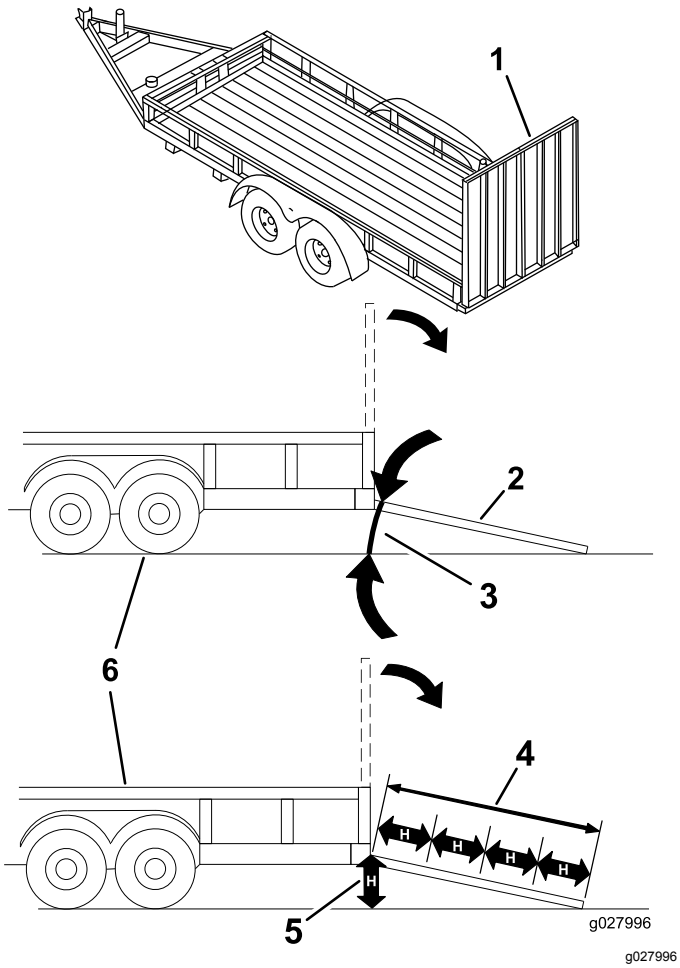

Figure 28

1. Full-width ramp in stowed position
2. Side view of full-width ramp in loading position
3. Not greater than 15 degrees
4. Ramp is at least four times (4X) as long as the height of the trailer or truck bed to the ground
5. H= height of the trailer or truck bed to the ground
6. Trailer

Operating Tips

Using the Fast Throttle Setting

For best mowing and maximum air circulation, operate the engine at the FAST-THROTTLE position. Air is required to thoroughly cut grass clippings, so do not set the height-of-cut so low as to totally surround the mower in uncut grass. Always try to have 1 side of the mower free from uncut grass, which allows air to be drawn into the mower.

Cutting a Lawn for the First Time

Cut the grass slightly longer than normal to ensure that the cutting height of the mower does not scalp any uneven ground. However, the cutting height used in the past is generally the best one to use. When cutting grass longer than 15 cm (6 inches) tall, you may want to cut the lawn twice to ensure an acceptable quality of cut.

Cutting a Third of the Grass Blade

It is best to cut only about 1/3 of the grass blade. Cutting more than that is not recommended unless grass is sparse, or it is late fall when grass grows more slowly.

Mowing Direction

Alternate the mowing direction to keep the grass standing straight. This also helps disperse clippings which enhances decomposition and fertilization.

Mowing at Correct Intervals

Normally, mow every 4 days. But, remember, grass grows at different rates at different times. So to maintain the same cutting height, which is a good practice, and mow more often in early spring. As the grass growth rate slows in mid summer, mow less frequently. If you cannot mow for an extended period, first mow at a high cutting height, then mow again 2 days later at a lower height setting.

Avoiding Cutting Too Low

If the cutting width of the mower is wider than the mower you previously used, raise the cutting height to ensure that uneven turf is not cut too short.

Cutting Long Grass

If the grass is ever allowed to grow slightly longer than normal, or if it contains a high degree of moisture, raise the cutting height higher than usual and cut the

grass at this setting. Then cut the grass again using the lower, normal setting.

Stopping

If you must stop the forward motion of the machine while mowing, a clump of grass clippings may drop onto your lawn. To avoid this, move onto a previously cut area with the blades engaged.

Keeping the Underside of the Mower Clean

Clean clippings and dirt from the underside of the mower after each use. If grass and dirt build up inside the mower, the cutting quality eventually becomes unsatisfactory.

Maintaining the Blade

Maintain a sharp blade throughout the cutting season, because a sharp blade cuts cleanly without tearing or shredding the grass blades. Tearing and shredding turns grass brown at the edges, which slows growth and increases the chance of disease. Check the cutter blades daily for sharpness and for any wear or damage. File down any nicks and sharpen and balance the blades as necessary. If a blade is damaged or worn, replace it immediately with a genuine Toro replacement blade.

Maintenance

Note: Determine the left and right sides of the machine from the normal operating position.

Recommended Maintenance Schedule(s)

Maintenance Service Interval	Maintenance Procedure
After the first 5 hours	• Change the engine oil.
Before each use or daily	• Check the engine-oil level. • Clean the air intake screen. • Check the cutting blades. • Inspect the grass deflector for damage
After each use	• Check and clean the front of the machine. • Clean the mower-deck housing.
Every 25 hours	• Grease all the lubrication points. • Clean the foam element (more often in dusty, dirty conditions). • Check tire pressure. • Check the belts for wear or cracks.
Every 100 hours	• Replace the foam element (more often in dusty, dirty conditions). • Service the paper element (more often in dusty, dirty conditions). • Change the engine oil (more often in dusty, dirty conditions). • Change the oil filter (more often in dusty, dirty conditions). • Check the spark plug(s). • Check the in-line fuel filter.
Every 200 hours	• Replace the paper element (more often in dusty, dirty conditions). • Replace the spark plug(s). • Replace the in-line fuel filter.
Before storage	• Charge the battery and disconnect battery cables. • Perform all maintenance procedures listed above before storage. • Paint any chipped surfaces.

⚠ CAUTION

If you leave the key in the ignition switch, someone could accidently start the engine and seriously injure you or other bystanders.

Remove the key from the ignition and disconnect the wire from the spark plug before you do any maintenance. Set the wire aside so that it does not accidentally contact the spark plug.

Pre-Maintenance Procedures

Raising the Seat

Ensure the parking brake is engaged and lift the seat forward.

The following components can be accessed by raising the seat:

- Serial plate
- Service decal
- Seat-adjustment bolts
- Fuel filter
- Battery and battery cables

Releasing the Mower-Deck Curtain

Loosen the 2 bottom bolts of the curtain to gain access to the top of the mower deck (Figure 29).

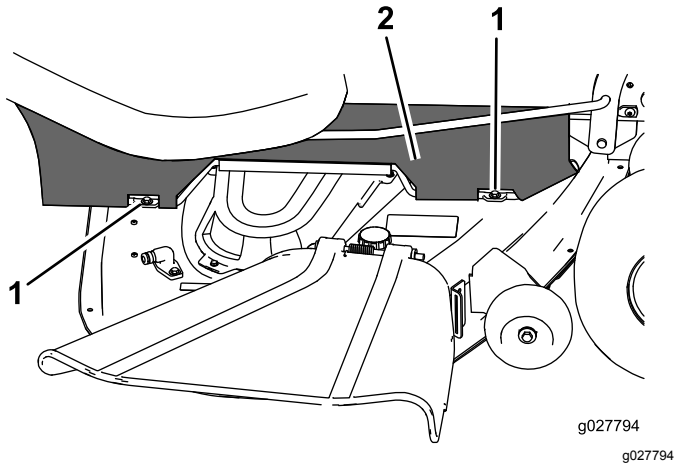

Figure 29

1. Bottom bolt
2. Mower-deck curtain

Raising the Front of the Machine

If the front of the machine needs to be raised, use the very front edge as show in Figure 30.

Important: **To prevent damage to the steering mechanism, ensure the very front edge of the machine is used for jacking points.**

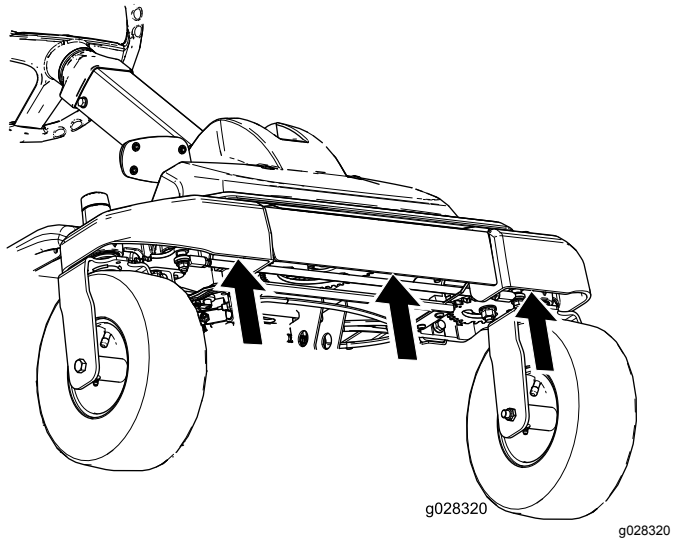

Figure 30

Lubrication

Greasing the Bearings

Service Interval: Every 25 hours—Grease all the lubrication points.

Grease Type: No. 2 lithium grease

1. Park the machine on a level surface, and disengage the blade-control switch.
2. Ensure the parking brake is engaged, stop the engine, remove the key, and wait for all moving parts to stop before leaving the operating position.
3. Clean the grease fittings (Figure 31 and Figure 32) with a rag.

   Note: Make sure to scrape any paint off of the front of the fitting(s).

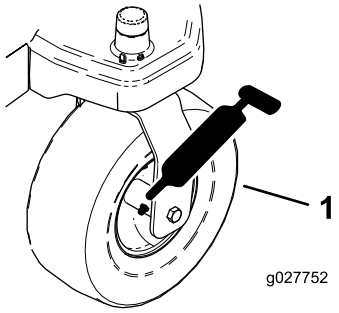

g027752

Figure 31

1. Front caster tire

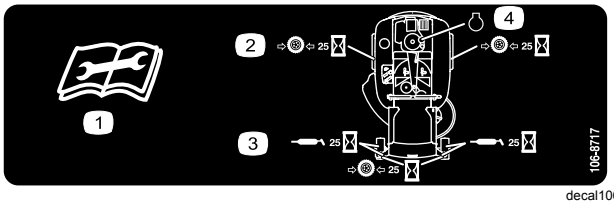

decal106-8717

Figure 32

Located on the seat-pan underside

1. Read the instructions before servicing or performing maintenance
2. Check the tire pressure every 25 operating hours
3. Grease every 25 operating hours
4. Engine

4. Connect a grease gun to each fitting (Figure 31 and Figure 32).
5. Pump grease into the fittings until grease begins to ooze out of the bearings.

Engine Maintenance

Servicing the Air Cleaner

Note: Service the air cleaner more frequently (every few hours) if operating conditions are extremely dusty or sandy.

Removing the Elements

1. Park the machine on a level surface and disengage the blade-control switch (PTO).
2. Engage the parking brake, stop the engine, remove the key, and wait for all moving parts to stop before leaving the operating position.
3. Clean around the air-cleaner cover to prevent dirt from getting into the engine and causing damage.
4. Lift the cover and rotate the air-cleaner assembly out of the engine (Figure 33).

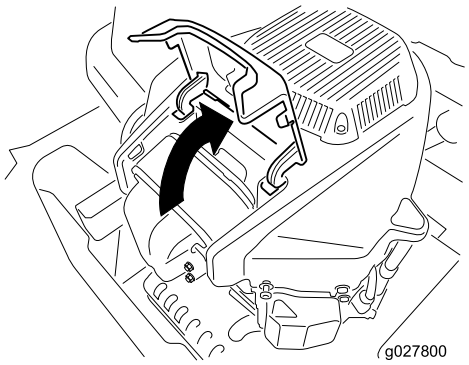

g027800

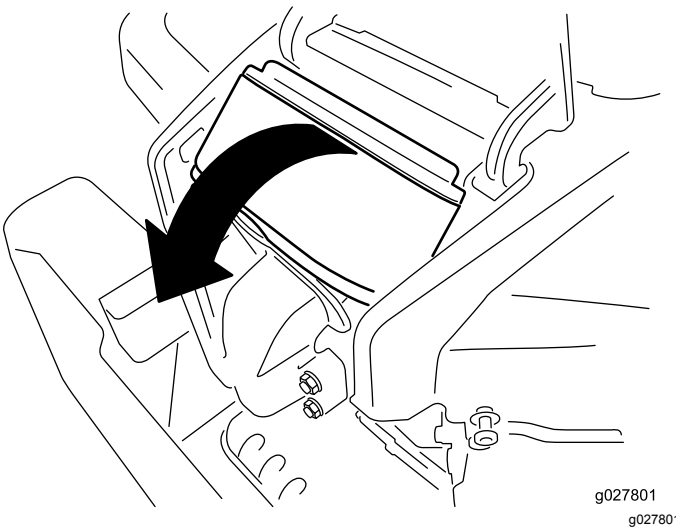

g027801

Figure 33

5. Remove the foam element from the paper element (Figure 34).

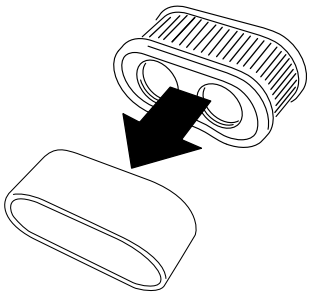

g027802

Figure 34

Servicing the Foam Element

Service Interval: Every 25 hours/Monthly (whichever comes first)—Clean the foam element (more often in dusty, dirty conditions).

Every 100 hours/Yearly (whichever comes first)—Replace the foam element (more often in dusty, dirty conditions).

Wash the foam element with water and replace the foam element if it is damaged.

Servicing the Paper Element

Service Interval: Every 100 hours/Yearly (whichever comes first)—Service the paper element (more often in dusty, dirty conditions).

Every 200 hours/Every 2 years (whichever comes first)—Replace the paper element (more often in dusty, dirty conditions).

1. Lightly tap the element on a flat surface to remove dust and dirt.
2. Inspect the element for tears, an oily film, and damage to the seal.

   Important: **Do not clean the paper element with pressurized air or liquids, such as solvent, gas, or kerosene. Replace the paper element if it is damaged or cannot be cleaned thoroughly.**

Servicing the Engine Oil

Oil Type: Detergent oil (API service SF, SG, SH, SJ, or SL)

Crankcase Capacity: 2.4 L (2.5 US qt)

Viscosity: See the table below.

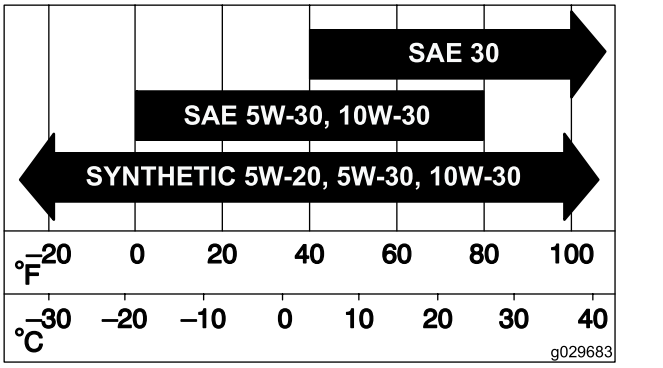

g029683

Figure 35

Checking the Engine-Oil Level

Service Interval: Before each use or daily

Note: Check the oil when the engine is cold.

⚠ WARNING

Contact with hot surfaces may cause personal injury.

Keep hands, feet, face, clothing, and other body parts away the muffler and other hot surfaces.

Important: **Do not overfill the crankcase with oil, because damage to the engine may result. Do not run engine with oil below the Low mark, because the engine may be damaged.**

1. Park the machine on a level surface, disengage the blade-control switch, stop the engine, engage parking brake, and remove the key.
2. Make sure that the engine is stopped, level, and is cool, so the oil has had time to drain into the sump.
3. To keep dirt, grass clippings, etc., out of the engine, clean the area around the oil-fill cap and dipstick before removing it (Figure 36).
4. Stop the engine, remove the key, and wait for all moving parts to stop before leaving the operating position.

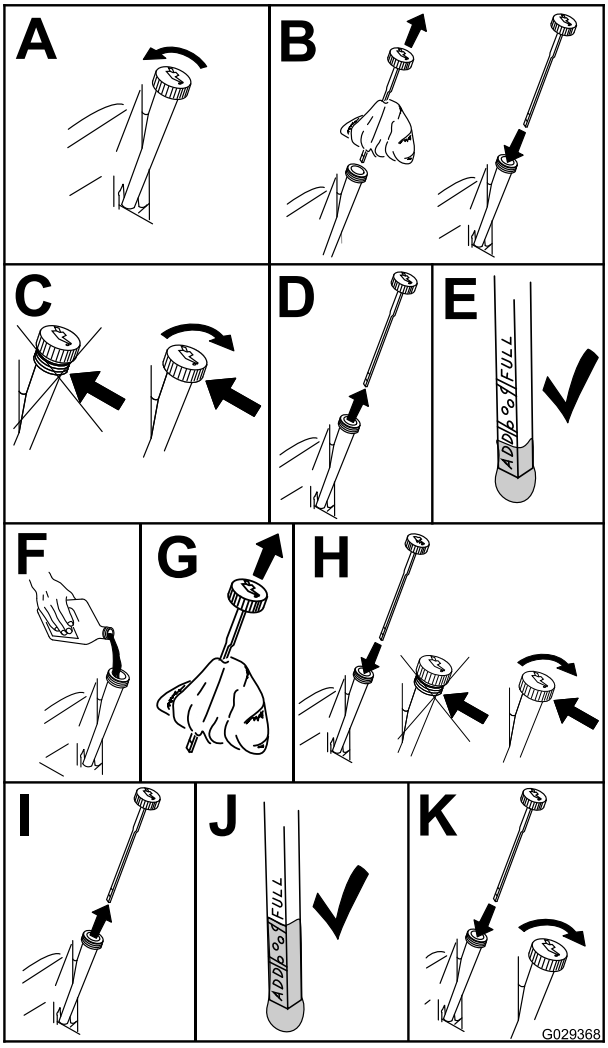

g029368

Figure 36

Changing the Engine Oil and Oil Filter

Service Interval: After the first 5 hours/After the first month (whichever comes first)—Change the engine oil.

Every 100 hours/Yearly (whichever comes first)—Change the engine oil (more often in dusty, dirty conditions).

Every 100 hours/Yearly (whichever comes first)—Change the oil filter (more often in dusty, dirty conditions).

Note: Change the engine-oil filter more frequently when operating conditions are extremely dusty or sandy.

Note: Dispose of the used oil at a recycling center.

1. Park the machine on a level surface to ensure the oil drains completely.
2. Disengage the PTO and ensure the parking brake is engaged.
3. Stop the engine, remove the key, and wait for all moving parts to stop before leaving the operating position.

4. Drain the engine oil.

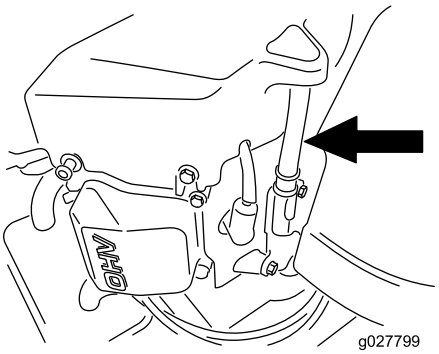

g027799

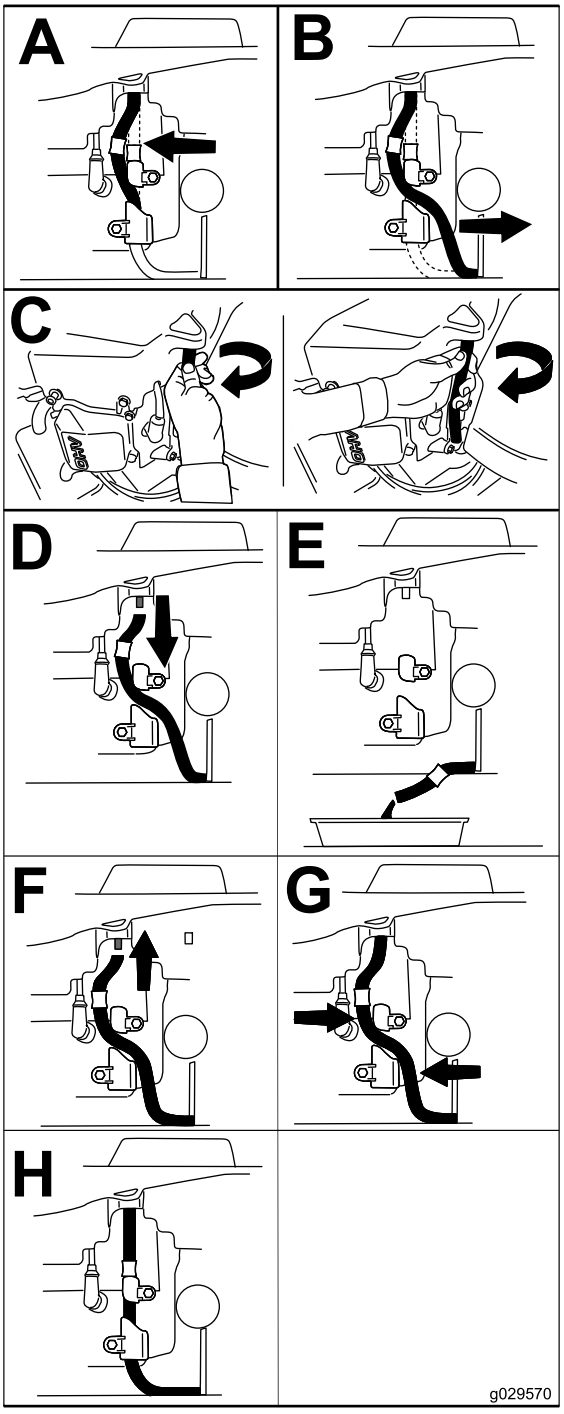

g029570

Figure 37

5. Change the engine oil filter (Figure 38).

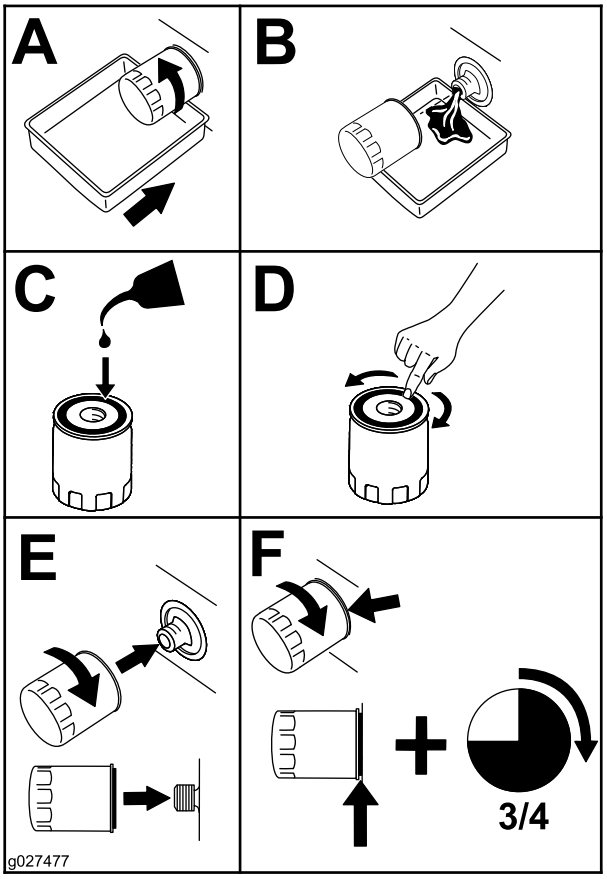

g027477

Figure 38

Note: Ensure that the oil-filter gasket touches the engine and then turn the filter an extra 3/4 turn.

6. Slowly pour approximately 80% of the specified oil into the filler tube and slowly add the additional oil to bring it to the **Full** mark (Figure 39).

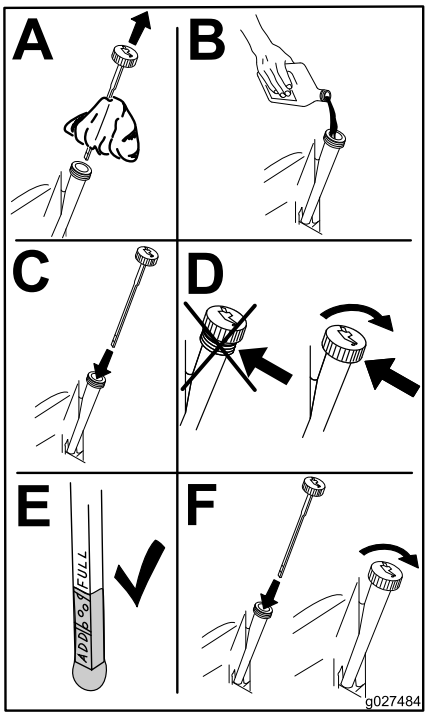

g027484

Figure 39

Servicing the Spark Plug

Service Interval: Every 100 hours/Yearly (whichever comes first)—Check the spark plug(s).

Every 200 hours/Every 2 years (whichever comes first)—Replace the spark plug(s).

Make sure that the air gap between the center and side electrodes is correct before installing the spark plug. Use a spark-plug wrench for removing and installing the spark plug(s) and a gapping tool/feeler gauge to check and adjust the air gap. Install a new spark plug(s) if necessary.

Type: Champion® RN9YC or NGK® BPR6ES

Air gap: 0.76 mm (0.03 inch)

Removing the Spark Plug

1. Disengage the PTO and ensure the parking brake is engaged.
2. Stop the engine, remove the key, and wait for all moving parts to stop before leaving the operating position.

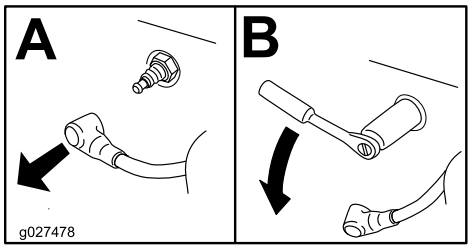

g027478

Figure 40

Note: Due to the deep recess around the spark plug, blowing out the cavity with compressed air is usually the most effective method for cleaning. The spark plug is most accessible when the blower housing is removed for cleaning.

Checking the Spark Plug

Important: **Do not clean the spark plug(s). Always replace the spark plug(s) when it has: a black coating, worn electrodes, an oily film, or cracks.**

If you see light brown or gray on the insulator, the engine is operating properly. A black coating on the insulator usually means the air cleaner is dirty.

Set the gap to 0.76 mm (0.030 inch).

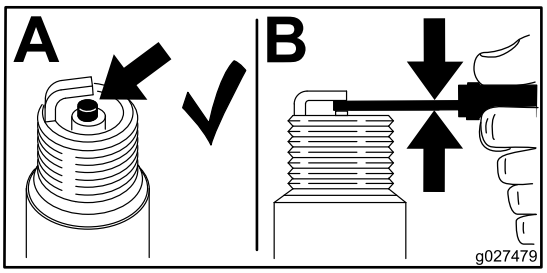

g027479

Figure 41

Installing the Spark Plug

Tighten the spark plug(s) to 25–30 N·m (18.5–22.1 ft-lb).

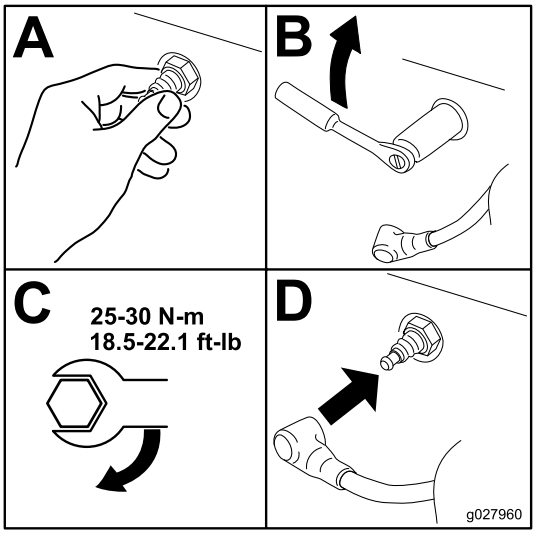

g027960

Figure 42

Cleaning the Cooling System

Clean the air intake screen from grass and debris before each use.

1. Disengage the blade control switch and apply the parking brake.
2. Stop the engine, remove the key, and wait for all moving parts to stop before leaving the operating position.
3. Remove the air filter from the engine.
4. Remove the engine shroud.
5. To prevent debris entering the air intake, install the air filter to the filter base.
6. Clean debris and grass from the parts.
7. Remove the air filter and install the engine shroud.
8. Install the air filter.

Fuel System Maintenance

⚠ DANGER

In certain conditions, gasoline is extremely flammable and highly explosive. A fire or explosion from gasoline can burn you, others, and can damage property.

- **Perform any fuel-related maintenance when the engine is cold. Do this outdoors in an open area. Wipe up any gasoline that spills.**
- **Never smoke when draining gasoline, and stay away from an open flame or where a spark may ignite the gasoline fumes.**

Replacing the In-Line Fuel Filter

Service Interval: Every 100 hours/Yearly (whichever comes first)—Check the in-line fuel filter.

Every 200 hours/Every 2 years (whichever comes first)—Replace the in-line fuel filter.

Never install a dirty filter if it is removed from the fuel line.

1. Park the machine on a level surface and disengage the blade-control switch.
2. Ensure the brake is engaged, stop the engine, remove the key, and wait for all moving parts to stop before leaving the operating position.

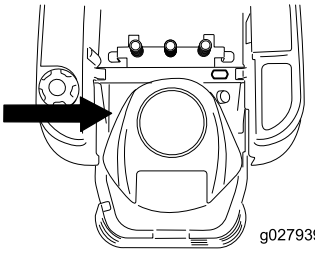

g027939

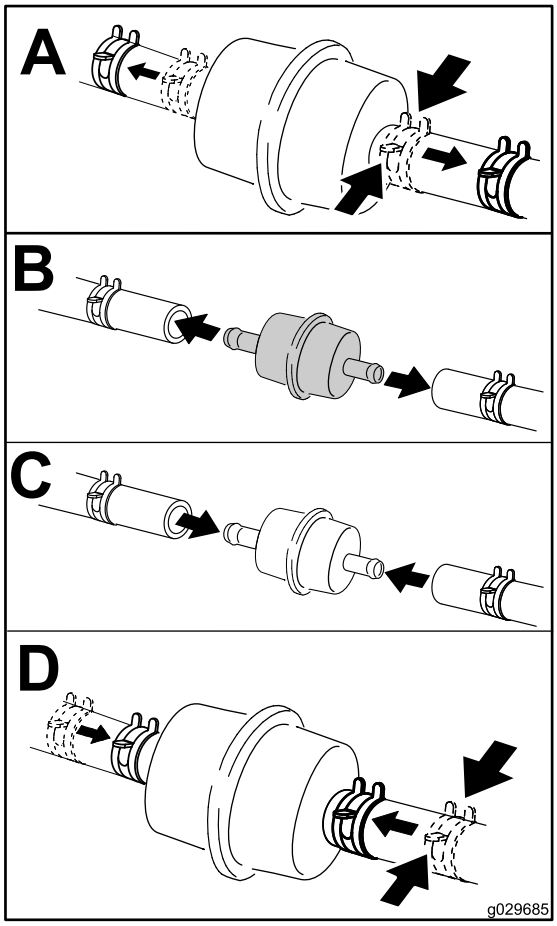

g029685

Figure 43

Electrical System Maintenance

Charging the Battery

Removing the Battery

⚠ WARNING

Battery terminals or metal tools could short against metal machine components causing sparks. Sparks can cause the battery gasses to explode, resulting in personal injury.

- **When removing or installing the battery, do not allow the battery terminals to touch any metal parts of the machine.**
- **Do not allow metal tools to short between the battery terminals and metal parts of the machine.**

1. Park the machine on a level surface and disengage the blade control switch.
2. Ensure the parking brake is engaged, stop the engine, remove the key, and wait for all moving parts to stop before leaving the operating position.
3. Raise the seat to access the battery.
4. Disconnect the negative (black) ground cable from the battery post (Figure 44). Retain all fasteners.

⚠ WARNING

Incorrect battery cable routing could damage the machine and cables causing sparks. Sparks can cause the battery gasses to explode, resulting in personal injury.

- **Always disconnect the negative (black) battery cable before disconnecting the positive (red) cable.**
- **Always connect the positive (red) battery cable before connecting the negative (black) cable.**

5. Slide the rubber cover up the positive (red) cable. Disconnect the positive (red) cable from the battery post (Figure 44). Retain all fasteners.
6. Remove the battery hold-down (Figure 44) and lift the battery from the battery tray.

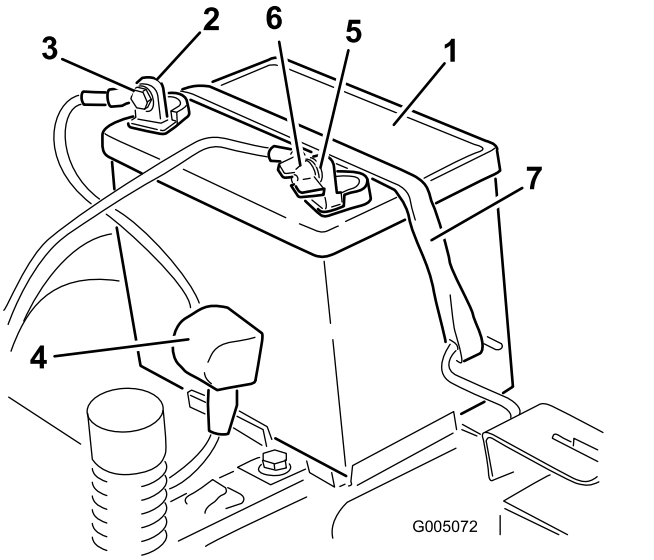

Figure 44

1. Battery
2. Positive battery post
3. Bolt, washer, and nut
4. Terminal boot
5. Negative battery post
6. Wing nut, washer, and bolt
7. Battery hold-down

Charging the Battery

Service Interval: Before storage—Charge the battery and disconnect battery cables.

1. Remove the battery from the chassis; refer to Removing the Battery.
2. Charge the battery for a minimum of 1 hour at 6 to 10 amps. Do not overcharge the battery.
3. When the battery is fully charged, unplug the charger from the electrical outlet, then disconnect the charger leads from the battery posts (Figure 45).

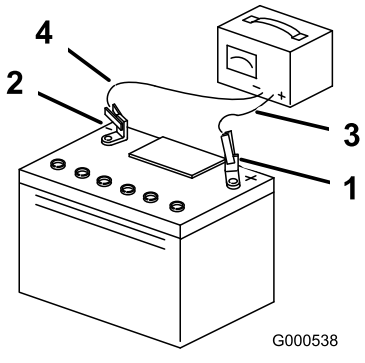

Figure 45

1. Positive battery post
2. Negative battery post
3. Red (+) charger lead
4. Black (-) charger lead

Installing the Battery

1. Position the battery in the tray (Figure 44).
2. Install the positive (red) battery cable to the positive (+) battery terminal using the fasteners removed previously.
3. Install the negative battery cable to the negative (-) battery terminal using the fasteners removed previously.
4. Slide the red terminal boot onto the positive (red) battery post.
5. Secure the battery with the hold-down (Figure 44).
6. Lower the seat.

Servicing the Fuses

The electrical system is protected by fuses. It requires no maintenance; however, if a fuse blows, check the component or circuit for a malfunction or short.

Fuse type:

- Main—F1-30 A, blade-type
- Charge Circuit—F2-25 A, blade-type

1. Remove the screws securing the control panel to the machine.

   Note: Retain all fasteners.

2. Lift the control pane up to access the main wiring harness and fuse block (Figure 46).
3. To replace a fuse, pull out the fuse to remove it (Figure 46).

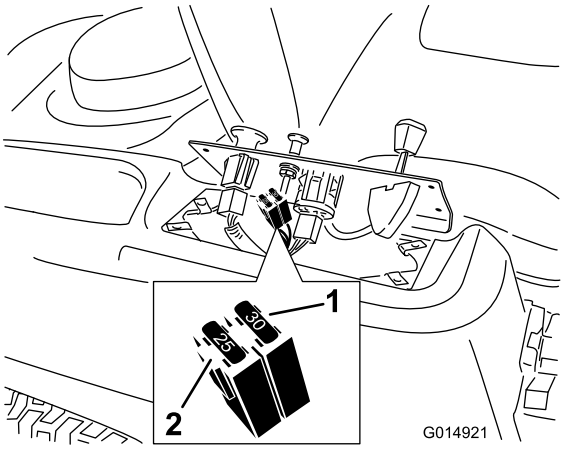

Figure 46

1. Main—30 amp
2. Charge circuit—25 amp

4. Return the control panel to its original position.

   Note: Use the screws removed previously to secure the panel to the machine.

Drive System Maintenance

Checking the Tire Pressure

Service Interval: Every 25 hours—Check tire pressure.

Maintain the air pressure in the front and rear tires as specified. Uneven tire pressure can cause uneven cut. Check the pressure at the valve stem (Figure 47). Check the tires when they are cold to get the most accurate pressure reading.

Refer to the maximum pressure suggested by the tire manufacturer on the sidewall of the caster wheel tires.

Inflate the rear drive wheel tires to 90 kPa (13 psi).

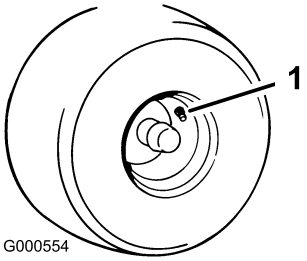

Figure 47

1. Valve stem

Releasing the Electric Brake

The electric brake can be release by manually rotating the link arms forward. Once the electric brake is energized the brake will reset.

To release the brake:

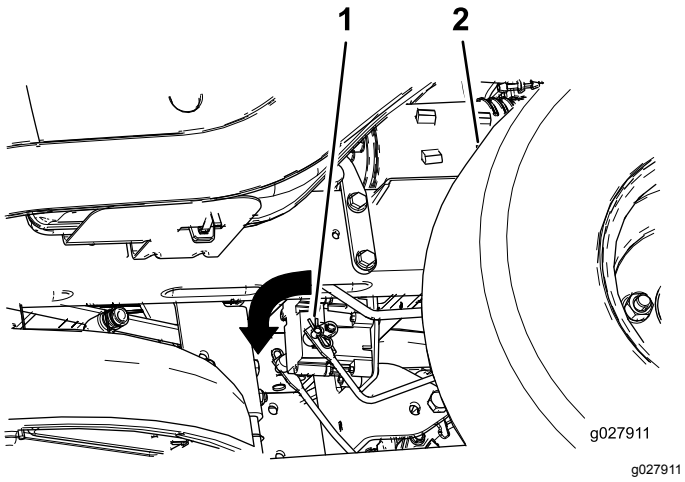

Figure 48

1. Brake link arm on the electric brake control module
2. Left rear tire

1. Turn the ignition key to the OFF position or disconnect the battery.
2. Locate the shaft on the electric brake where the brake link arms are connected.
3. Rotate the shaft forward to release the brake.

Mower Maintenance

Servicing the Cutting Blades

Maintain sharp and balanced blades throughout the cutting season, because sharp blades cut cleanly without tearing or shredding the grass blades. Tearing and shredding turns grass brown at the edges, which slows growth, and increases the chance of disease.

Check the cutter blades daily for sharpness, and for any wear or damage. File down any nicks and sharpen the blades as necessary. If a blade is damaged or worn, replace it immediately with a genuine Toro replacement blade. For convenient sharpening and replacement, you may want to keep extra blades on hand.

⚠ WARNING

A worn or damaged blade can break, and a piece of the blade could be thrown at you or bystander's, resulting in serious personal injury or death.

- **Inspect the blade periodically for wear or damage.**
- **Replace a worn or damaged blade.**

Before Inspecting or Servicing the Blades

Park the machine on a level surface, disengage the blade-control switch, ensure the parking brake is engaged, stop the engine, and remove the key.

Inspecting the Blades

Service Interval: Before each use or daily—Check the cutting blades.

1. Inspect the cutting edges (Figure 49).

   Note: If the edges are not sharp or have nicks, remove and sharpen the blades; refer to Sharpening the Blades (page 47).

2. Inspect the blades, especially the curved area (Figure 49).

   Note: If you notice any damage, wear, or a slot forming in this area (item 3 in Figure 49), immediately install a new blade.

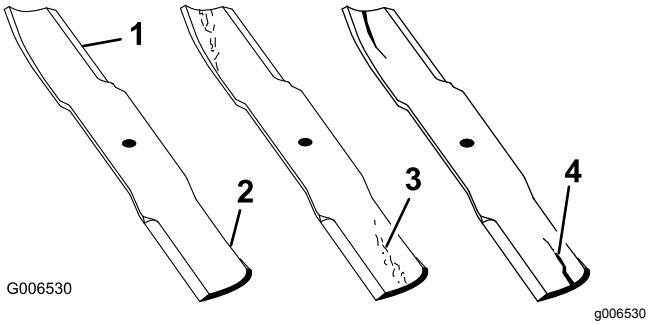

Figure 49

1. Cutting edge
2. Curved area
3. Wear/slot forming
4. Damage

Checking for Bent Blades

Note: The machine must be on a level surface for the following procedure.

1. Raise the mower deck to the highest height-of-cut position; also considered the 'transport' position.
2. While wearing thickly padded gloves, or other adequate hand protection, slowly rotate the blade to be measure into a position that allows effective measurement of the distance between the cutting edge and the level surface the machine is on (Figure 50).

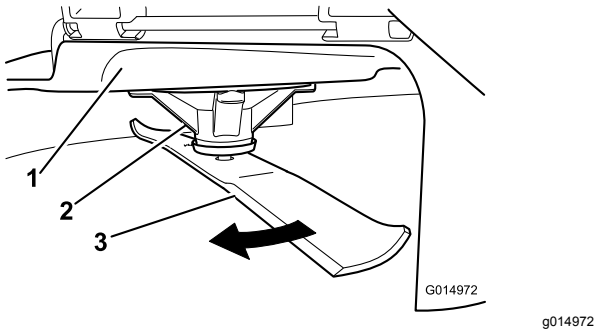

Figure 50

1. Deck
2. Spindle housing
3. Blade

3. Measure from the tip of the blade to the flat surface (Figure 51).

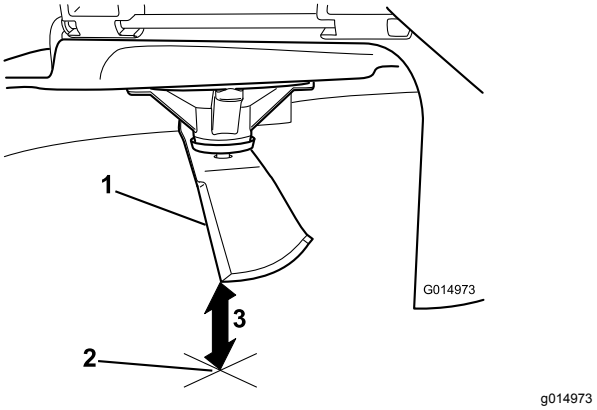

Figure 51

1. Blade (in position for measuring)
2. Level surface
3. Measured distance between blade and the surface (A)

4. Rotate the same blade 180 degrees, so that the opposing cutting edge is now in the same position (Figure 52).

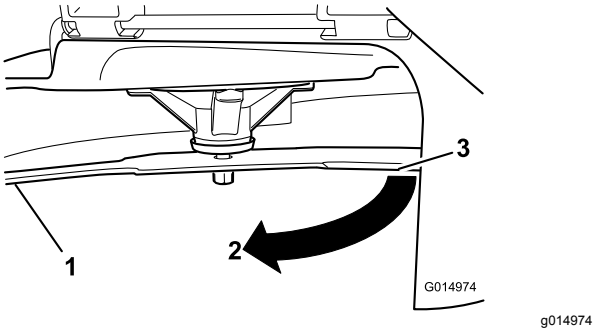

Figure 52

1. Blade (side previously measured)
2. Measurement (position used previously)
3. Opposing side of blade being moved into measurement position

5. Measure from the tip of the blade to the flat surface (Figure 53).

   Note: The variance should be no more than 3 mm (1/8 inch).

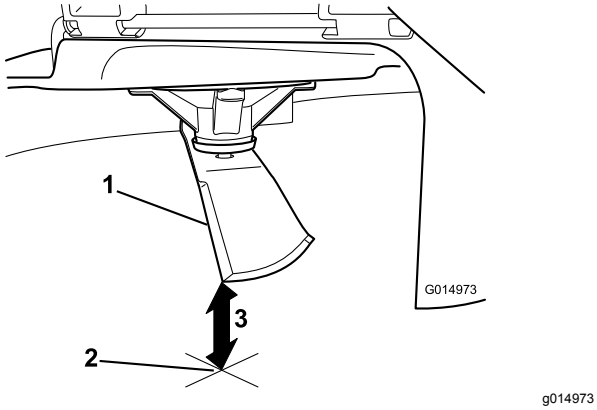

Figure 53

1. Opposite blade edge (in position for measuring)
2. Level surface
3. Second measured distance between blade and surface (B)

A. If the difference is greater than 3 mm (1/8 inch), replace the blade with a new blade; refer to Removing the Blades (page 47) and Installing the Blades (page 48).

   Note: If a bent blade is replaced with a new one, and the dimension obtained continues to exceed 3 mm (1/8 inch), the blade spindle could be bent. Contact an Authorized Toro Dealer for service.

B. If the variance is within constraints, move to the next blade.

Repeat this procedure on each blade.

Removing the Blades

The blades must be replaced if a solid object is hit, if the blade is out of balance, or if the blade is bent. To ensure optimum performance and continued safety conformance of the machine, use genuine Toro replacement blades. Replacement blades made by other manufacturers may result in non-conformance with safety standards.

1. Hold the blade end using a rag or thickly-padded glove.
2. Remove the blade bolt, the curved washer, and the blade from the spindle shaft (Figure 54).

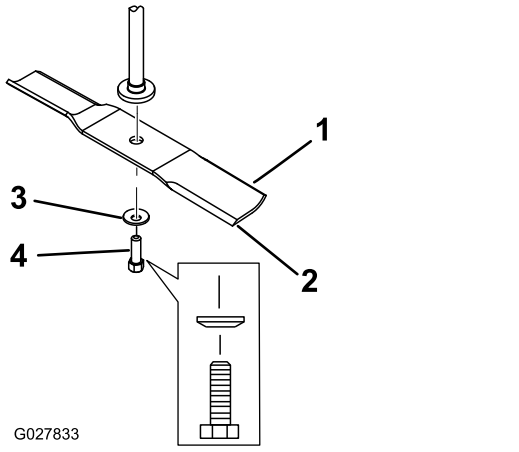

Figure 54

1. Sail area of the blade
2. Blade
3. Curved washer
4. Blade bolt

Sharpening the Blades

1. Use a file to sharpen the cutting edge at both ends of the blade (Figure 55).

   Note: Maintain the original angle.

   Note: The blade retains its balance if the same amount of material is removed from both cutting edges.

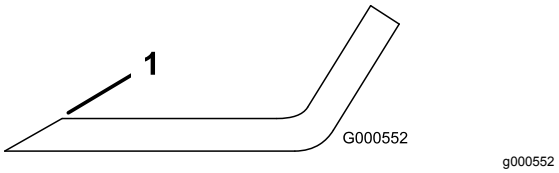

Figure 55

1. Sharpen at original angle

2. Check the balance of the blade by putting it on a blade balancer (Figure 56).

   Note: If the blade stays in a horizontal position, the blade is balanced, and can be used.

   Note: If the blade is not balanced, file some metal off the end of the sail area only (Figure 55).

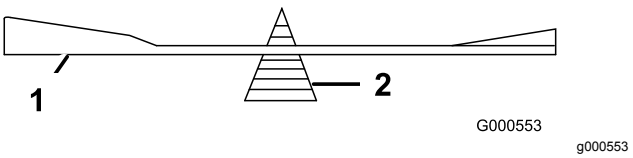

Figure 56

1. Blade
2. Balancer

3. Repeat this procedure until the blade is balanced.

Installing the Blades

1. Install the blade onto the spindle shaft (Figure 54).

   Important: **The curved part of the blade must be pointing upward toward the inside of the mower to ensure proper cutting.**

2. Install the curved washer (cupped side toward the blade) and the blade bolt (Figure 54).
3. Torque the blade bolt to 47 to 88 N·m (35 to 65 ft-lb).

Leveling the Mower Deck

Check to ensure that the mower deck is level any time you install the mower or when you see an uneven cut on your lawn.

The mower deck must be checked for bent blades prior to leveling; any bent blades must be removed and replaced; refer to the Checking for Bent Blades (page 46) before continuing.

The mower deck must be leveled side-to-side first then the front to rear slope can be adjusted.

Requirements:

- The machine must be on a level surface.
- All tires must be properly inflated; refer to Checking the Tire Pressure (page 44).

Side-to-Side Leveling

1. Park the machine on a level surface and disengage the blade-control switch.
2. Ensure the parking brake is engaged, stop the engine, remove the key, and wait for all moving parts to stop before leaving the operating position.
3. Set the height-of-cut lever to middle position.
4. Carefully rotate the blades so that they are all side to side (Figure 57 and Figure 58).

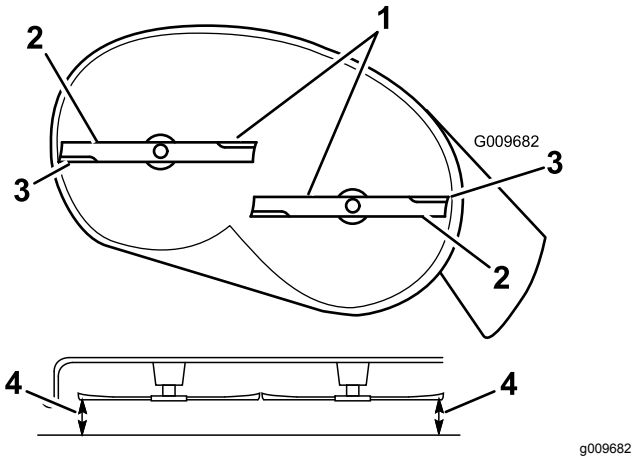

Figure 57

Mower Decks with 2 Blades

1. Blades side to side
2. Sail area of blade
3. Outside cutting edges
4. Measure from the tip of the blade to the flat surface here

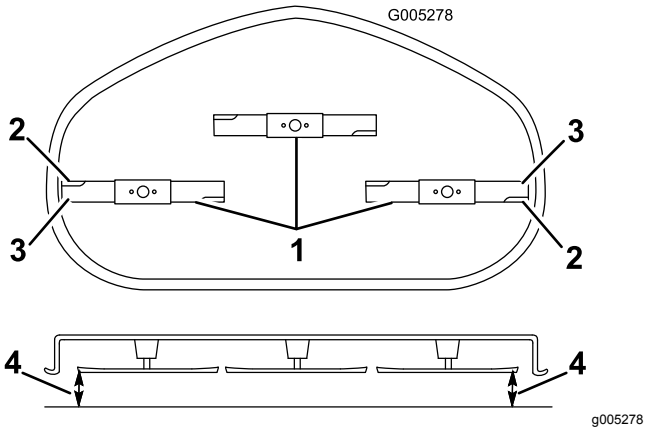

Figure 58

Mower Decks with 3 Blades

1. Blades side to side
2. Sail area of blade
3. Outside cutting edges
4. Measure from the tip of the blade to the flat surface here

5. Measure between the outside cutting edges and the flat surface (Figure 57 and Figure 58).

   Note: If both measurements are not within 5 mm (3/16 inch), an adjustment is required; continue with this procedure.

6. Move to the left side of the machine.
7. Loosen the side locking nut.
8. Raise or lower the left side of the mower deck by rotating the rear nut (Figure 59).

   Note: Rotate the rear nut clockwise to raise the mower deck; rotate the rear nut counter-clockwise to lower the mower deck. (Figure 59).

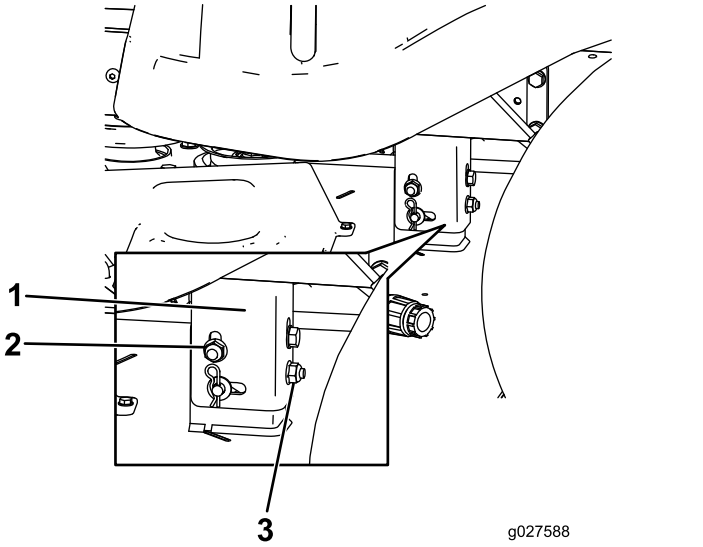

Figure 59

1. Hanger bracket
2. Side locking nut
3. Rear nut

9. Check the side-to-side adjustments again. Repeat this procedure until the measurements are correct.
10. Continue leveling the mower deck by checking the front-to-rear blade slope; refer to Adjusting the Front-to-Rear Blade Slope (page 49).

Adjusting the Front-to-Rear Blade Slope

Check the front-to-rear blade level any time you install the mower. If the front of the mower is more than 7.9 mm (5/16 inch) lower than the rear of the mower, adjust the blade level using the following instructions:

1. Park the machine on a level surface and disengage the blade-control switch.
2. Ensure the parking brake is engaged., stop the engine, remove the key, and wait for all moving parts to stop before leaving the operating position.
3. Set the height-of-cut lever to middle position.

   Note: Check and adjust the side-to-side blade level if you have not checked the setting; refer to Side-to-Side Leveling (page 48).
4. Carefully rotate the blades so they are facing front to rear (Figure 60 and Figure 61).

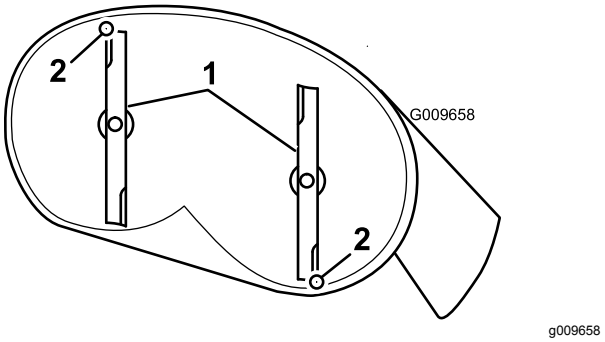

Figure 60

Mower Decks with 2 Blades

1. Blades front to rear
2. Measure from the tip of the blade to the flat surface here

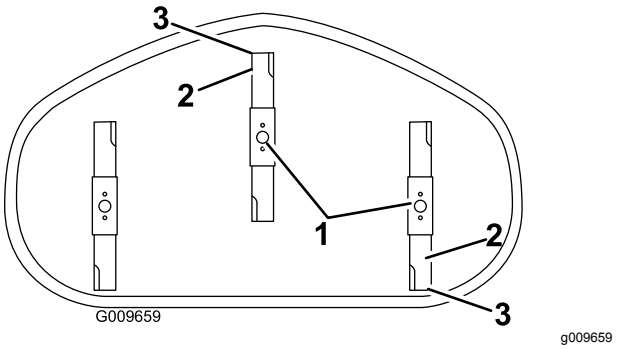

Figure 61

Mower Decks with 3 Blades

1. Blades front to rear
2. Outside cutting edges
3. Measure from the tip of the blade to the flat surface here.

5. Measure from the tip of the front blade to the flat surface, and the tip of the rear blade to the flat surface (Figure 60 and Figure 61).

   Note: If the front blade tip is not 1.6 to 7.9 mm (1/16 to 5/16 inch) lower than the rear blade tip, adjust the front locknut.
6. To adjust the front-to-rear blade slope, rotate the adjustment nut in the front of the mower (Figure 62).

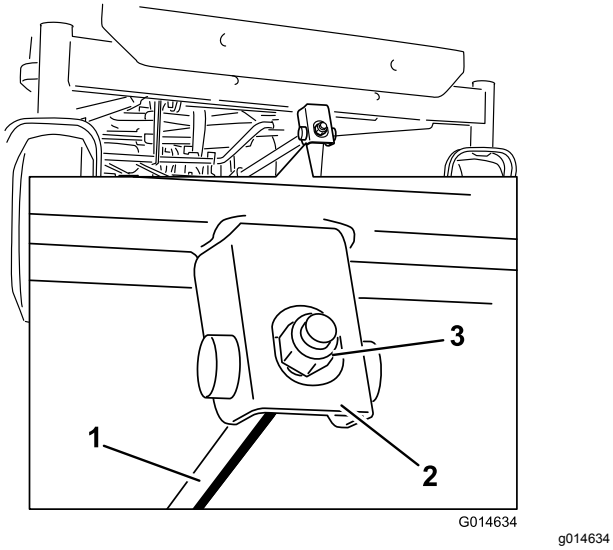

g014634

Figure 62

1. Adjusting rod
2. Adjusting block
3. Locknut

7. To raise the front of the mower, tighten the adjustment nut.
8. To lower the front of the mower, loosen the adjustment nut.
9. After adjustment, check the front-to-rear slope again, continue adjusting the nut until the front blade tip is 1.6 to 7.9 mm (1/16 to 5/16 inch) lower than the rear blade tip (Figure 60 and Figure 61).
10. When the front-to-rear blade slope is correct check the side-to-side level of the mower again, refer to Side-to-Side Leveling (page 48).

Removing the Mower Deck

1. Park the machine on a level surface and disengage the blade-control switch.
2. Ensure the parking brake is engaged, stop the engine, remove the key, and wait for all moving parts to stop before leaving the operating position.
3. Lower the height-of-cut lever to the lowest position.
4. Loosen the bottom 2 bolts holding the mower-deck curtain to the mower deck. Refer to Releasing the Mower-Deck Curtain (page 34).
5. Remove the hairpin-cotter pin from the front support rod, and remove the rod from the deck bracket (Figure 63).

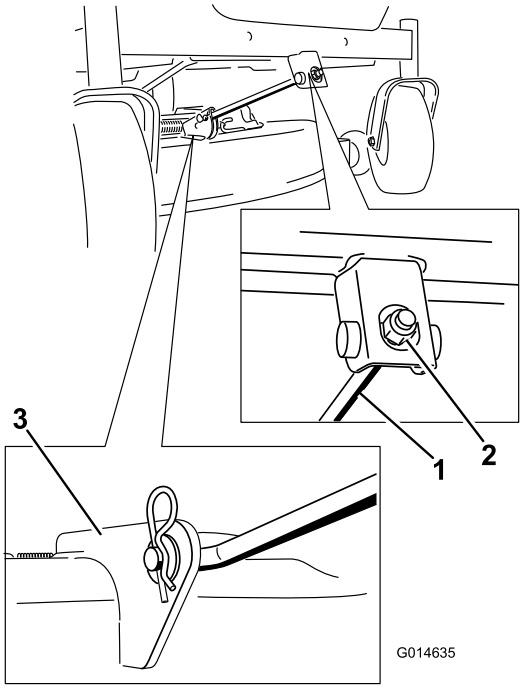

g014635

Figure 63

1. Front support rod
2. Locking nut
3. Deck bracket

6. Carefully lower the front of the mower deck to the ground.
7. Lift the mower deck and hanger brackets clear of the rear lift rod and lower the mower carefully to the ground (Figure 64).

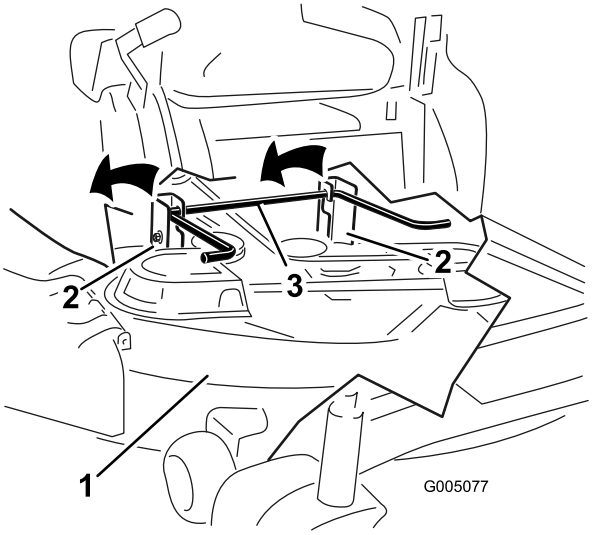

g005077

Figure 64

1. Mower deck
2. Hanger bracket
3. Rear lift rod

8. Slide the mower deck rearward to remove the mower belt from the engine pulley.

9. Slide the mower deck out from underneath the machine.

   Note: Retain all parts for future installation.

Installing the Mower Deck

1. Park the machine on a level surface and disengage the blade-control switch.
2. Ensure the parking brake is engaged, stop the engine, remove the key, and wait for all moving parts to stop before leaving the operating position.
3. Slide the mower under the machine.
4. Lower the height-of-cut lever to the lowest position.
5. Lift the rear of the mower deck and guide the hanger brackets over the rear lift rod (Figure 64).
6. Attach the front support rod to the mower deck with the clevis pin and hairpin-cotter pin (Figure 63).
7. Install the mower belt onto the engine pulley; refer to Replacing the Mower-Deck Belt (page 52).
8. Tighten the bottom 2 bolts for the mower-deck curtain to the mower deck. Refer to Releasing the Mower-Deck Curtain (page 34).

Replacing the Grass Deflector

Service Interval: Before each use or daily—Inspect the grass deflector for damage

⚠ WARNING

An uncovered discharge opening could allow the lawn mower to throw objects in the operator's or bystander's direction and result in serious injury. Also, contact with the blade could occur.

Never operate the machine without the grass deflector, the discharge cover, or the grass-collection system in place.

Inspect the grass deflector for damage before each use. Replace any damaged parts before use.

1. Remove the nut (3/8 inch) from the rod under the mower (Figure 65).

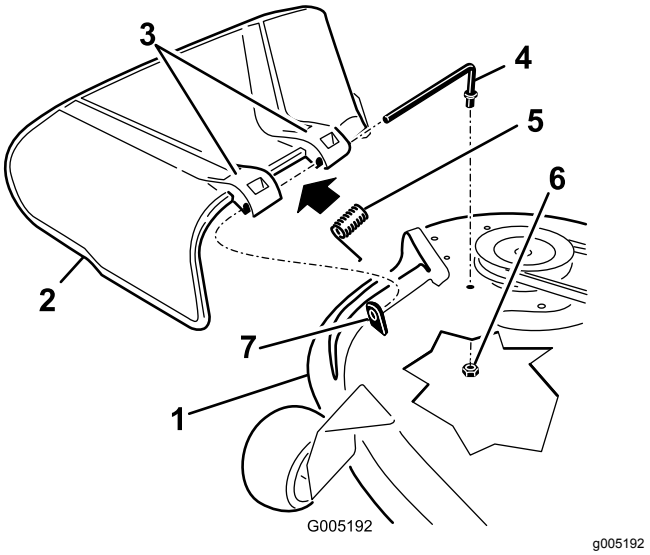

g005192

Figure 65

1. Mower deck
2. Grass deflector
3. Grass-deflector bracket
4. Rod
5. Spring
6. Nut (3/8 inch)
7. Short standoff

2. Slide the rod out of the short standoff, the spring, and the grass deflector (Figure 65).
3. Remove the damaged or worn grass deflector.
4. Replace the grass deflector (Figure 65).
5. Slide the rod (straight end), through the rear-grass-deflector bracket.
6. Place the spring on the rod, with the end wires down and between the grass deflector brackets.
7. Slide rod through the second grass-deflector bracket (Figure 65).

8. Insert the rod at the front of the grass deflector into the short standoff on the deck.
9. Secure the rear end of the rod into the mower with a nut (3/8 inch) as shown in Figure 65.

Important: **The grass deflector must be spring loaded and in the down position. Lift the deflector up to test that it snaps to the full down position.**

Mower Belt Maintenance

Inspecting the Belts

Service Interval: Every 25 hours—Check the belts for wear or cracks.

Check the belts for cracks, frayed edges, burn marks, or any other damage. Replace damaged belts.

Replacing the Mower-Deck Belt

Squealing when the belt is rotating, blades slipping when cutting grass, frayed belt edges, burn marks, and cracks are signs of a worn mower belt. Replace the mower belt if any of these conditions are evident.

1. Park the machine on a level surface and disengage the blade-control switch.
2. Ensure the parking brake is engaged, stop the engine, remove the key, and wait for all moving parts to stop before leaving the operating position.
3. Set the height-of-cut at the lowest cutting position of 38 mm (1-1/2 inches).
4. Remove the pulley covers.
5. Loosen the bottom two bolts holding the mower-deck curtain to the mower deck. Refer to Releasing the Mower-Deck Curtain (page 34).
6. Using a spring-removal tool, (Toro part no. 92-5771), remove the idler spring from the deck hook to remove tension on the idler pulley, and roll the belt off of the pulleys (Figure 66 and Figure 67).

⚠ WARNING

The spring is under tension when installed and can cause personal injury.

Be careful when removing the belt.

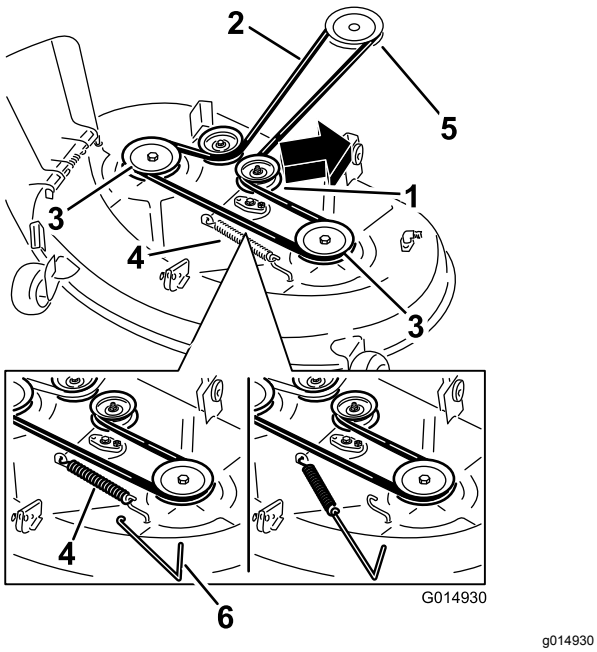

g014930

Figure 66

Mower decks with 2 Blades

1. Idler pulley
2. Mower belt
3. Outside pulley
4. Spring
5. Engine pulley
6. Spring-removal tool

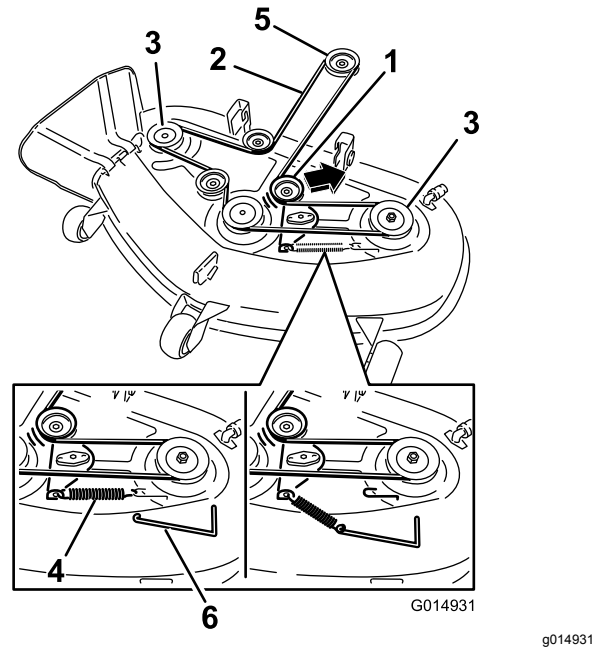

g014931

Figure 67

Mower decks with 3 Blades

1. Idler pulley
2. Mower belt
3. Outside pulley
4. Spring
5. Engine pulley
6. Spring-removal tool

7. Route the new belt around the engine pulley and mower pulleys (Figure 67).
8. Using a spring-removal tool, install the idler spring over the deck hook, and place tension on the idler pulley and mower belt (Figure 66 and Figure 67).
9. Tighten the bottom 2 bolts for the mower-deck curtain to the mower deck. Refer to Releasing the Mower-Deck Curtain (page 34).
10. Install the pulley covers.

Cleaning

Cleaning under the Front of the Machine

Service Interval: After each use—Check and clean the front of the machine.

Remove debris under the front of the machine with compressed air or by hand with a brush (Figure 68).

Note: Do not use water to clean under the front of the machine, this can cause build up of debris.

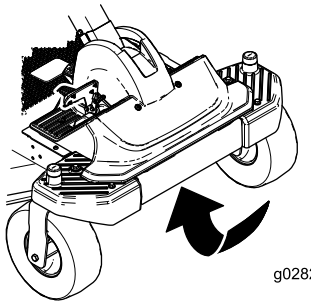

g028248

Figure 68

Washing the Underside of the Mower

Service Interval: After each use—Clean the mower-deck housing.

Important: **You can wash the machine with a mild detergent and water. Do not pressure wash the machine. Avoid excessive use of water, especially near the control panel, under the seat, around the engine, hydraulic pumps, and motors.**

Wash the underside of the mower after each use to prevent grass buildup for improved mulch action and clipping dispersal.

1. Park the machine on a level surface and disengage the blade-control switch.
2. Ensure the parking brake is engaged, stop the engine, remove the key, and wait for all moving parts to stop before leaving the operating position.
3. Attach the hose coupling to the end of the mower washout fitting, and turn the water on high (Figure 69).

   Note: Spread petroleum jelly on the washout fitting O-ring to make the coupling slide on easier and protect the O-ring.

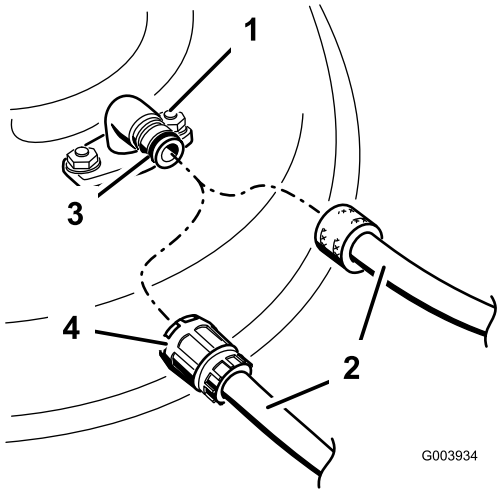

g003934

Figure 69

1. Washout fitting
2. Hose
3. O-ring
4. Coupling

4. Lower the mower to the lowest height-of-cut.
5. Sit on the seat and start the engine.
6. Engage the blade-control switch and let the mower run for 1 to 3 minutes.
7. Disengage the blade-control switch, stop the engine, remove the ignition key, and wait for all moving parts to stop.
8. Turn the water off and remove the coupling from the washout fitting.

   Note: If the mower is not clean after one washing, soak it and let it stand for 30 minutes. Then, repeat the process.
9. Run the mower again for 1 to 3 minutes to remove excess water.

⚠ WARNING

A broken or missing washout fitting could expose you and others to thrown objects or blade contact. Contact with a blade or thrown debris can cause injury or death.

- **Replace broken or missing washout fitting immediately, before using mower again.**
- **Never put your hands or feet under the mower or through openings in the mower.**

Storage

Cleaning and Storage

1. Disengage the blade-control switch, move the motion controls outward to the PARK position, stop the engine, and remove the key.
2. Remove grass clippings, dirt, and grime from the external parts of the entire machine, especially the engine.
3. Clean dirt and chaff from the outside of the engine cylinder-head fins and blower housing.

   Important: **You can wash the machine with a mild detergent and water. Do not pressure wash the machine. Avoid excessive use of water, especially near the control panel, under the seat, around the engine, hydraulic pumps, and motors.**
4. Service the air cleaner; refer to Servicing the Air Cleaner (page 35).
5. Grease and oil the machine; refer to Lubrication (page 35).
6. Change the crankcase oil and filter; refer to Servicing the Engine Oil (page 36).
7. Check the tire pressure; refer to Checking the Tire Pressure (page 44).
8. Charge the battery; refer to Charging the Battery (page 43).
9. Check the condition of the blades; refer to Inspecting the Blades (page 45).
10. Prepare the machine for storage when non-use occurs over 30 days. Prepare the machine for storage as follows.
11. Add a petroleum based stabilizer/conditioner to the fuel in the tank. Follow the mixing instructions from the stabilizer manufacturer. Do not use an alcohol based stabilizer (ethanol or methanol).

    Note: A fuel stabilizer/conditioner is most effective when mixed with fresh gasoline and used at all times.

    Run the engine to distribute the conditioned fuel through the fuel system (5 minutes).

    Stop the engine, allow it to cool, and drain the fuel tank.

    Restart the engine and run it until it stops.

    Choke the engine. Start and run the engine until it does not start.

    Dispose of fuel properly. Recycle pursuant to local codes.

    Important: **Do not store stabilizer/conditioned gasoline over 30 days.**
12. Remove the spark plug(s) and check its condition; refer to Checking the Spark Plug (page 40). With the spark plug(s) removed from the engine, pour two tablespoons of engine oil into the spark plug hole. Use the starter to crank the engine and distribute the oil inside the cylinder. Install the spark plug(s). Do not install the wire on the spark plug(s).
13. Clean any dirt and chaff from the top of the mower.
14. Scrape any heavy buildup of grass and dirt from the underside of the mower, then wash the mower with a garden hose.
15. Check the condition of the drive and mower belts.
16. Check and tighten all bolts, nuts, and screws. Repair or replace any part that is worn or damaged.
17. Paint all scratched or bare metal surfaces. Paint is available from your Authorized Service Dealer.
18. Store the machine in a clean, dry garage or storage area. Remove the key from the ignition switch and keep it in a memorable place. Cover the machine to protect it and keep it clean.

Troubleshooting

Problem	Possible Cause	Corrective Action
The fuel tank is showing signs of collapsing or the machine is showing signs of frequently running out of fuel.	1. The air-cleaner paper element clogged.	1. Clean the paper element.
The engine overheats.	1. The engine load is excessive. 2. The oil level in the crankcase is low. 3. The cooling fins and air passages under the engine blower housing are plugged. 4. The air cleaner is dirty. 5. Dirt, water, or stale fuel is in fuel system.	1. Reduce ground speed. 2. Add oil to the crankcase. 3. Remove the obstruction from the cooling fins and air passages. 4. Clean or replace the air-cleaner element. 5. Contact an Authorized Service Dealer
The starter does not crank	1. The traction-control pedal is engaged. 2. The battery is dead. 3. The electrical connections are corroded or loose. 4. A fuse is blown. 5. A relay or switch is damaged.	1. Move the traction-control pedal to neutral. 2. Charge the battery. 3. Check the electrical connections for good contact. 4. Replace the fuse. 5. Contact an Authorized Service Dealer.
The engine does not start, starts hard, or fails to keep running.	1. The fuel tank is empty. 2. The choke is not on. 3. The air cleaner is dirty. 4. The spark plug wire(s) is loose or disconnected. 5. The spark plug(s) is pitted, fouled, or the gap is incorrect. 6. There is dirt in fuel filter. 7. Dirt, water, or stale fuel is in fuel system. 8. There is incorrect fuel in the fuel tank. 9. The oil level in the crankcase is low.	1. Fill the fuel tank. 2. Move the choke lever to On. 3. Clean or replace the air-cleaner element. 4. Install the wire(s) on the spark plug. 5. Install a new, correctly gapped spark plug(s). 6. Replace the fuel filter. 7. Contact an Authorized Service Dealer. 8. Drain the tank and replace the fuel with the proper type. 9. Add oil to the crankcase.
The engine loses power.	1. The engine load is excessive. 2. The air cleaner is dirty. 3. The oil level in the crankcase is low. 4. The cooling fins and air passages under the engine blower housing are plugged. 5. The spark plug(s) is pitted, fouled, or the gap is incorrect. 6. The fuel tank vent is blocked. 7. There is dirt in the fuel filter. 8. Dirt, water, or stale fuel is in the fuel system. 9. There is incorrect fuel in the fuel tank.	1. Reduce ground speed. 2. Clean the air-cleaner element. 3. Add oil to the crankcase. 4. Remove the obstruction from the cooling fins and air passages. 5. Install a new, correctly gapped spark plug(s). 6. Contact an Authorized Service Dealer. 7. Replace the fuel filter. 8. Contact an Authorized Service Dealer. 9. Drain the tank and replace the fuel with the proper type.
The machine does not drive.	1. The bypass valves are open. 2. The traction belts are worn, loose, or broken. 3. The traction belts are off of the pulleys. 4. The transmission has failed.	1. Close the tow valves. 2. Contact an Authorized Service Dealer. 3. Contact an Authorized Service Dealer. 4. Contact an Authorized Service Dealer.

Problem	Possible Cause	Corrective Action
There is abnormal vibration.	1. The engine mounting bolts are loose. 2. The engine pulley, idler pulley, or blade pulley is loose. 3. The engine pulley is damaged. 4. The cutting blade(s) is/are bent or unbalanced. 5. A blade mounting bolt is loose. 6. A blade spindle is bent.	1. Tighten the engine mounting bolts. 2. Tighten the appropriate pulley. 3. Contact an Authorized Service Dealer. 4. Install a new cutting blade(s). 5. Tighten the blade mounting bolt. 6. Contact an Authorized Service Dealer.
Uneven cutting height.	1. The blade(s) is not sharp. 2. A cutting blade(s) is/are bent. 3. The mower is not level. 4. An anti-scalp wheel is not set correctly. 5. The underside of the mower is dirty. 6. The tire pressure is incorrect. 7. A blade spindle is bent.	1. Sharpen the blade(s). 2. Install a new cutting blade(s). 3. Level the mower from side-to-side and front-to-rear. 4. Adjust the anti-scalp wheel height. 5. Clean the underside of the mower. 6. Adjust the tire pressure. 7. Contact an Authorized Service Dealer.
The blades do not rotate.	1. The drive belt is worn, loose or broken. 2. The drive belt is off of the pulley. 3. The Power Take-Off (PTO) switch or PTO clutch is faulty. 4. The mower belt is worn, loose, or broken.	1. Install a new drive belt. 2. Install the drive belt and check the adjusting shafts and belt guides for the correct position. 3. Contact an Authorized Service Dealer. 4. Install a new mower belt.

Schematics

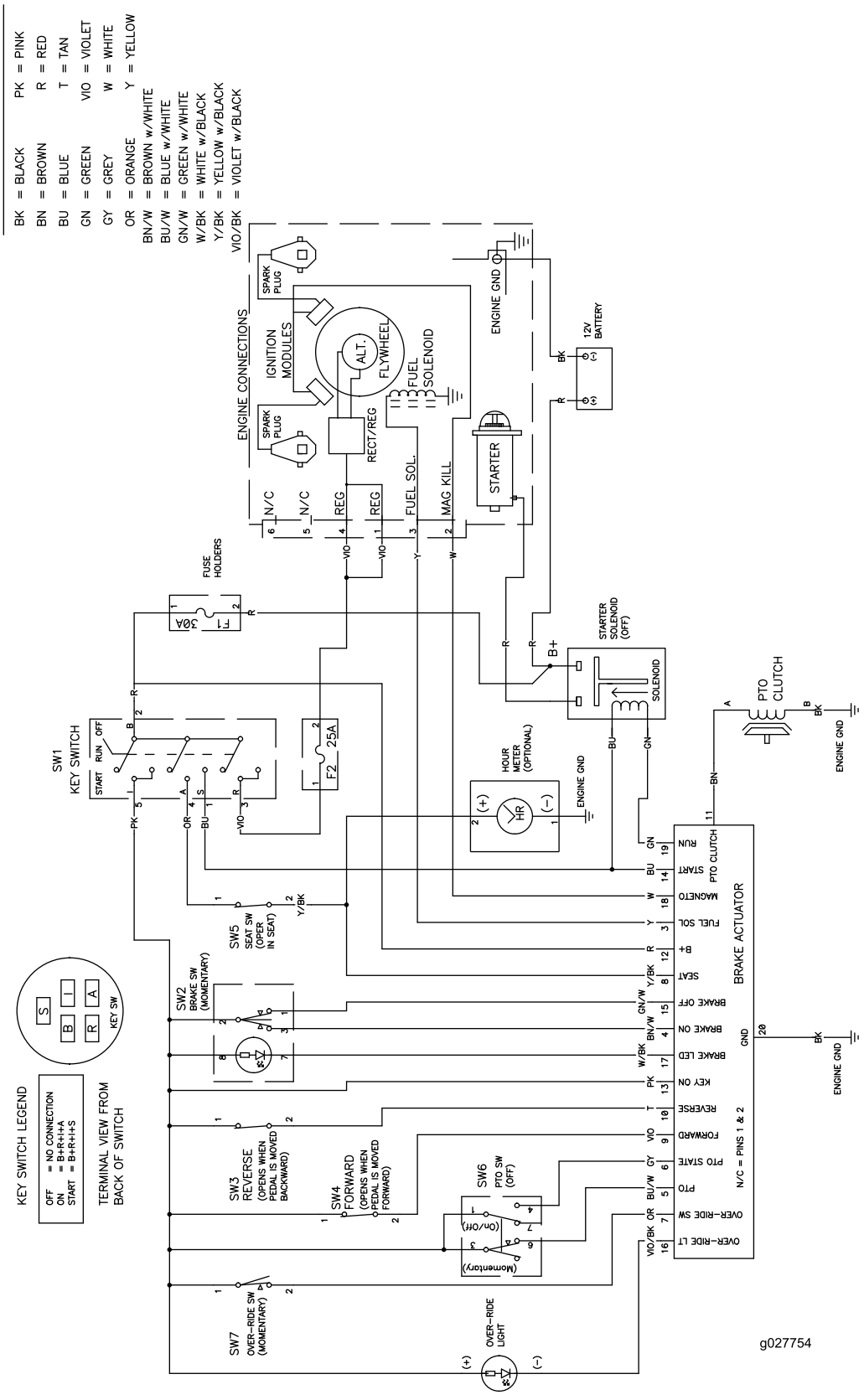

Electrical Diagram (Rev. A)

International Distributor List

Distributor:	Country:	Phone Number:	Distributor:	Country:	Phone Number:
Agrolanc Kft	Hungary	36 27 539 640	Maquiver S.A.	Colombia	57 1 236 4079
Asian American Industrial (AAI)	Hong Kong	852 2497 7804	Maruyama Mfg. Co. Inc.	Japan	81 3 3252 2285
B-Ray Corporation	Korea	82 32 551 2076	Mountfield a.s.	Czech Republic	420 255 704 220
Brisa Goods LLC	Mexico	1 210 495 2417	Mountfield a.s.	Slovakia	420 255 704 220
Casco Sales Company	Puerto Rico	787 788 8383	Munditol S.A.	Argentina	54 11 4 821 9999
Ceres S.A.	Costa Rica	506 239 1138	Norma Garden	Russia	7 495 411 61 20
CSSC Turf Equipment (pvt) Ltd.	Sri Lanka	94 11 2746100	Oslinger Turf Equipment SA	Ecuador	593 4 239 6970
Cyril Johnston & Co.	Northern Ireland	44 2890 813 121	Oy Hako Ground and Garden Ab	Finland	358 987 00733
Cyril Johnston & Co.	Republic of Ireland	44 2890 813 121	Parkland Products Ltd.	New Zealand	64 3 34 93760
Fat Dragon	China	886 10 80841322	Perfetto	Poland	48 61 8 208 416
Femco S.A.	Guatemala	502 442 3277	Pratoverde SRL.	Italy	39 049 9128 128
FIVEMANS New-Tech Co., Ltd	China	86-10-6381 6136	Prochaska & Cie	Austria	43 1 278 5100
ForGarder OU	Estonia	372 384 6060	RT Cohen 2004 Ltd.	Israel	972 986 17979
G.Y.K. Company Ltd.	Japan	81 726 325 861	Riversa	Spain	34 9 52 83 7500
Geomechaniki of Athens	Greece	30 10 935 0054	Lely Turfcare	Denmark	45 66 109 200
Golf international Turizm	Turkey	90 216 336 5993	Lely (U.K.) Limited	United Kingdom	44 1480 226 800
Hako Ground and Garden	Sweden	46 35 10 0000	Solvert S.A.S.	France	33 1 30 81 77 00
Hako Ground and Garden	Norway	47 22 90 7760	Spypros Stavrinides Limited	Cyprus	357 22 434131
Hayter Limited (U.K.)	United Kingdom	44 1279 723 444	Surge Systems India Limited	India	91 1 292299901
Hydroturf Int. Co Dubai	United Arab Emirates	97 14 347 9479	T-Markt Logistics Ltd.	Hungary	36 26 525 500
Hydroturf Egypt LLC	Egypt	202 519 4308	Toro Australia	Australia	61 3 9580 7355
Irrimac	Portugal	351 21 238 8260	Toro Europe NV	Belgium	32 14 562 960
Irrigation Products Int'l Pvt Ltd.	India	0091 44 2449 4387	Valtech	Morocco	212 5 3766 3636
Jean Heybroek b.v.	Netherlands	31 30 639 4611	Victus Emak	Poland	48 61 823 8369

European Privacy Notice

The Information Toro Collects
Toro Warranty Company (Toro) respects your privacy. In order to process your warranty claim and contact you in the event of a product recall, we ask you to share certain personal information with us, either directly or through your local Toro company or dealer.

The Toro warranty system is hosted on servers located within the United States where privacy law may not provide the same protection as applies in your country.

BY SHARING YOUR PERSONAL INFORMATION WITH US, YOU ARE CONSENTING TO THE PROCESSING OF YOUR PERSONAL INFORMATION AS DESCRIBED IN THIS PRIVACY NOTICE.

The Way Toro Uses Information
Toro may use your personal information to process warranty claims, to contact you in the event of a product recall and for any other purpose which we tell you about. Toro may share your information with Toro's affiliates, dealers or other business partners in connection with any of these activities. We will not sell your personal information to any other company. We reserve the right to disclose personal information in order to comply with applicable laws and with requests by the appropriate authorities, to operate our systems properly or for our own protection or that of other users.

Retention of your Personal Information
We will keep your personal information as long as we need it for the purposes for which it was originally collected or for other legitimate purposes (such as regulatory compliance), or as required by applicable law.

Toro's Commitment to Security of Your Personal Information
We take reasonable precautions in order to protect the security of your personal information. We also take steps to maintain the accuracy and current status of personal information.

Access and Correction of your Personal Information
If you would like to review or correct your personal information, please contact us by email at legal@toro.com.

Australian Consumer Law

Australian customers will find details relating to the Australian Consumer Law either inside the box or at your local Toro Dealer.

TimeCutter
and
TITAN
Mowers

The Toro Warranty

Limited Warranty (see warranty periods below)

Conditions and Products Covered

The Toro Company and its affiliate, Toro Warranty Company, pursuant to an agreement between them, jointly promise to repair the Toro Products listed below if defective in materials or workmanship.

The following time periods apply from the date of purchase by the original owner:

Products	Warranty Period
TimeCutter and MX Mowers	Residential use[2] – 3 years
• Engines[1] — Residential use	Kawasaki – 3 years Kohler – 3 years Toro – 3 years
TimeCutter and MX Mowers	Commercial use 30 days
• Engines[1] — Commercial use	Kawasaki – 3 years Kohler – 90 days Toro – 90 days
TITAN SW and ZS Series Mowers – Residential or Commercial use	3 years or 300 hours[3]
• Engines[1] — Residential or Commercial use	Kawasaki – 3 years
• Frame	Lifetime (original owner only)[4]
TITAN MX Series Mowers – Residential or Commercial use	4 years or 400 hours[3]
• Engines[1] — Residential or Commercial use	Kawasaki – 3 years
• Frame	Lifetime (original owner only)[4]
All Mowers	
• Attachments	1 year
• Battery	90 days Parts and Labor 1 year Parts only
• Belts and Tires	90 days

[1]Some engines used on Toro Products are warranted by the engine manufacturer.

[2]Residential use means use of the product on the same lot as your home. Use at more than one location is considered commercial use and the commercial use warranty would apply.

[3]Whichever occurs first.

[4]Lifetime Frame Warranty - If the main frame, consisting of the parts welded together to form the tractor structure that other components such as the engine are secured to, cracks or breaks in normal use, it will be repaired or replaced, at Toro's option, under warranty at no cost for parts and labor. Frame failure due to misuse or abuse and failure or repair required due to rust or corrosion are not covered.

Warranty may be denied if the hour meter is disconnected, altered, or shows signs of being tampered with.

Owner Responsibilities

You must maintain your Toro Product by following the maintenance procedures described in the *Operator's Manual*. Such routine maintenance, whether performed by a dealer or by you, is at your expense.

Instructions for Obtaining Warranty Service

If you think that your Toro Product contains a defect in materials or workmanship, follow this procedure:

1. Contact any Authorized Toro Service Dealer to arrange service at their dealership. To locate a dealer convenient to you, access our web site at www.Toro.com. You may also call the numbers listed in item #3 to use the 24-hour Toro Dealer locator system.
2. Bring the product and your proof of purchase (sales receipt) to the Service Dealer. The dealer will diagnose the problem and determine if it is covered under warranty.
3. If for any reason you are dissatisfied with the Service Dealer's analysis or with the assistance provided, contact us at:

   Toro Warranty Company
   Customer Care Department, RLC Division
   8111 Lyndale Avenue South
   Bloomington, MN 55420-1196
   Toll free at 866-216-6029 (U.S. customers)
   Toll free at 866-216-6030 (Canadian customers)

Items and Conditions Not Covered

There is no other express warranty except for special emission system coverage and engine warranty coverage on some products. This express warranty does not cover the following:

- Cost of regular maintenance service or parts, such as filters, fuel, lubricants, oil changes, spark plugs, air filters blade sharpening or worn blades, cable/linkage adjustments, or brake and clutch adjustments
- Components failing due to normal wear
- Any product or part which has been altered or misused or neglected or requires replacement or repair due to accidents or lack of proper maintenance
- Pickup and delivery charges
- Repairs or attempted repairs by anyone other than an Authorized Toro Service Dealer
- Repairs necessary due to failure to follow recommended fuel procedure (consult *Operator's Manual* for more details)
  - Removing contaminants from the fuel system is not covered
  - Use of old fuel (more than one month old) or fuel which contains more than 10% ethanol or more that 15% MTBE
  - Failure to drain the fuel system prior to any period of non-use over one month

General Conditions

All repairs covered by these warranties must be performed by an Authorized Toro Service Dealer using Toro approved replacement parts.

Neither The Toro Company nor Toro Warranty Company is liable for indirect, incidental or consequential damages in connection with the use of the Toro Products covered by this warranty, including any cost or expense of providing substitute equipment or service during reasonable periods of malfunction or non-use pending completion of repairs under this warranty.

All implied warranties of merchantability (that the product is fit for ordinary use) and fitness for use (that the product is fit for a particular purpose) are limited to the duration of the express warranty.

Some states do not allow exclusions of incidental or consequential damages, or limitations on how long an implied warranty lasts, so the above exclusions and limitations may not apply to you.

This warranty gives you specific legal rights, and you may also have other rights which vary from state to state.

Countries Other than the United States or Canada

This warranty is not valid in Mexico. Customers who have purchased Toro products outside the United States or Canada should contact their Toro Distributor (Dealer) to obtain guarantee policies for your country, province, or state. If for any reason you are dissatisfied with your Distributor's service or have difficulty obtaining guarantee information, contact the Toro importer. If all other remedies fail, you may contact us at Toro Warranty Company.

Australian Consumer Law: Australian customers will find details relating to the Australian Consumer Law either inside the box or at your local Toro Dealer.