Form No. 3398-257 Rev B

TimeMaster® 76cm Lawn Mower

Model No. 20976—Serial No. 400000000 and Up

Model No. 20978—Serial No. 400000000 and Up

Operator's Manual

Introduction

This rotary-blade, walk-behind lawn mower is intended to be used by residential homeowners. It is designed primarily for cutting grass on well-maintained lawns on residential properties. It is not designed for cutting brush or for agricultural uses.

Read this information carefully to learn how to operate and maintain your product properly and to avoid injury and product damage. You are responsible for operating the product properly and safely.

You may contact Toro directly at www.Toro.com for product and accessory information, help finding a dealer, or to register your product.

Whenever you need service, genuine Toro parts, or additional information, contact an Authorized Service Dealer or Toro Customer Service and have the model and serial numbers of your machine ready. Figure 1 identifies the location of the model and serial numbers on the product. Write the numbers in the space provided.

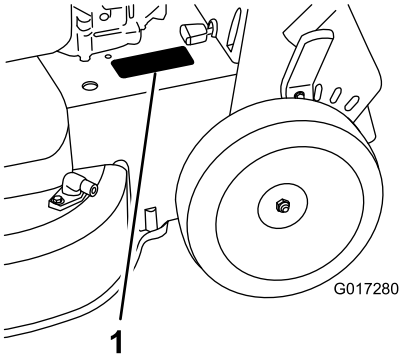

g017280

Figure 1

1. Model and serial number location

Model No. _____

Serial No. _____

This manual identifies potential hazards and has safety messages identified by the safety-alert symbol (Figure 2), which signals a hazard that may cause serious injury or death if you do not follow the recommended precautions.



g000502

Figure 2

Safety-alert symbol

This manual uses 2 words to highlight information. **Important** calls attention to special mechanical information and **Note** emphasizes general information worthy of special attention.

This product complies with all relevant European directives; for details, please see the separate product specific Declaration of Conformity (DOC) sheet.

Net Torque: The gross or net torque of this engine was laboratory rated by the engine manufacturer in accordance with the Society of Automotive Engineers (SAE) J1940. As configured to meet safety, emission, and operating requirements, the actual engine torque on this class of mower will be significantly lower. Go to www.Toro.com to view specifications on your mower model.

Contents

Introduction 1
Safety 2
General Safety 2
Safety and Instructional Decals 3
Setup 5
1 Assembling the Handle 5
2 Installing the Blade-Control Bar 6
3 Filling the Engine with Oil 6
4 Charging the Battery 6
5 Assembling the Grass Bag 7
Product Overview 8
Specifications 9
Operation 9
Before Operation 9
Before Operation Safety 9
Filling the Fuel Tank 9
Checking the Engine-Oil Level 10

© 2017—The Toro® Company
8111 Lyndale Avenue South
Bloomington, MN 55420

Register at www.Toro.com.

CE

Original Instructions (EN)
Printed in Mexico
All Rights Reserved

3398-257 B

Adjusting the Handle Height 11
Adjusting the Cutting Height 11
During Operation 12
During Operation Safety 12
Starting the Engine 12
Using the Self-Propel Drive 13
Shutting Off the Engine 13
Engaging the Blades 13
Disengaging the Blades 14
Checking the Blade-Stop System Operation 14
Recycling the Clippings 14
Bagging the Clippings 15
Side-Discharging the Clippings 16
Operating Tips 16
After Operation 17
After Operation Safety 17
Cleaning under the Machine 17
Maintenance 18
Recommended Maintenance Schedule(s) 18
Maintenance Safety 18
Preparing for Maintenance 18
Servicing the Air Filter 19
Changing the Engine Oil 19
Charging the Battery 20
Replacing the Fuse 21
Replacing the Battery 21
Adjusting the Self-Propel Drive 22
Servicing the Blade-Drive System 22
Servicing the Blades 23
Checking for Bent Blades 24
Removing the Blades 25
Installing the Blades 25
Storage 26
General Information 26
Preparing the Fuel System 26
Preparing the Engine 27
Removing the Machine from Storage 27

Safety

This machine has been designed in accordance with EN ISO 5395:2013

General Safety

This product is capable of amputating hands and feet and of throwing objects. Always follow all safety instructions to avoid serious personal injury.

Using this product for purposes other than its intended use could prove dangerous to you and bystanders.

- Read and understand the contents of this *Operator's Manual* before starting the engine.
- Do not put your hands or feet near moving components of the machine.
- Do not operate the machine without all guards and other safety protective devices in place and working on the machine.
- Keep clear of any discharge opening. Keep bystanders a safe distance away from the machine.
- Keep children out of the operating area. Never allow children to operate the machine.
- Stop the machine and shut off the engine before servicing, fueling, or unclogging the machine.

Improperly using or maintaining this machine can result in injury. To reduce the potential for injury, comply with these safety instructions and always pay attention to the safety-alert symbol, which means Caution, Warning, or Danger—personal safety instruction. Failure to comply with these instructions may result in personal injury or death.

You can find additional safety information where needed throughout this manual.

Safety and Instructional Decals

Safety decals and instructions are easily visible to the operator and are located near any area of potential danger. Replace any decal that is damaged or missing.

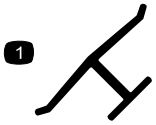

decaloemmarkt

Manufacturer's Mark

1. This mark indicates that the blade is identified as a part from the original machine manufacturer.

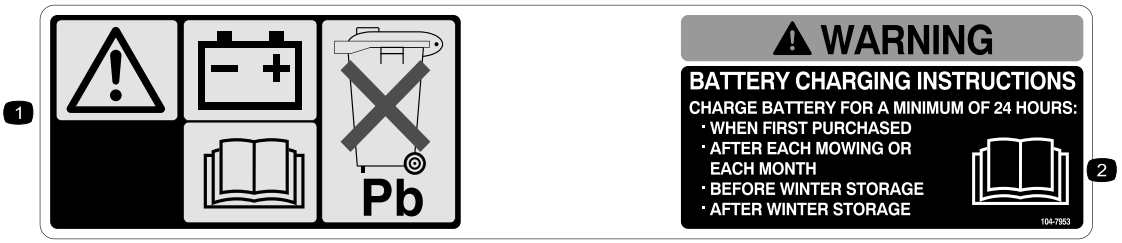

decal104-7953

104-7953

Electric-Start Model Only

1. Warning—read the *Operator's Manual* for information on charging the battery; contains lead; do not discard.
2. Read the *Operator's Manual.*

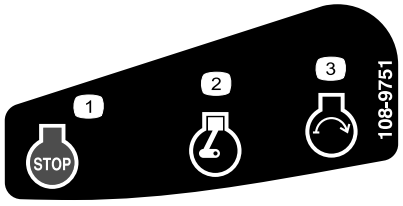

decal108-9751

108-9751

Electric-Start Model Only

1. Engine—stop (shut off)
2. Engine—run
3. Engine—start

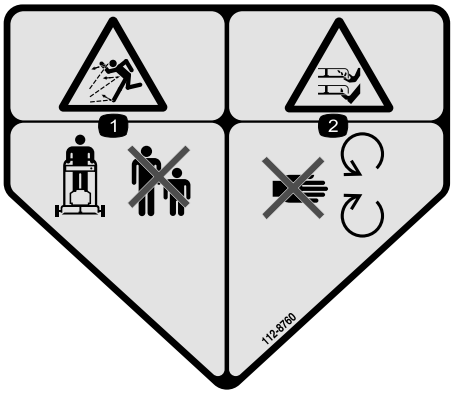

decal112-8760

112-8760

1. Thrown object hazard—keep bystanders a safe distance away from the machine.
2. Cutting/dismemberment of hand or foot—stay away from moving parts.

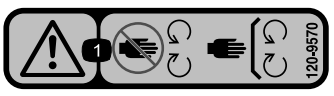

decal120-9570

120-9570

1. Warning—stay away from moving parts; keep all guards and shields in place.

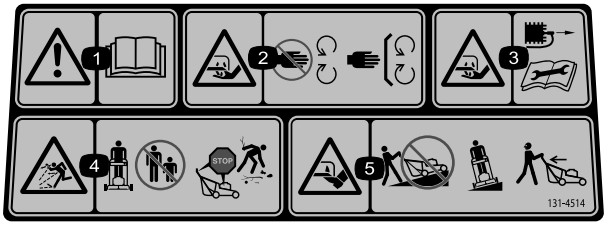

decal131-4514b

131-4514

1. Warning—read the *Operator's Manual*.
2. Cutting/dismemberment hazard of hand or foot, mower blade—stay away from moving parts; keep all guards and shields in place.
3. Cutting/dismemberment hazard of hand or foot, mower blade—disconnect the spark-plug wire and read the instructions before servicing or performing maintenance.
4. Thrown object hazard—keep bystanders a safe distance away from the machine; shut off the engine before leaving the operating position; pick up any debris before mowing.
5. Cutting/dismemberment hazard of hand or foot, mower blade—do not operate up and down slopes; operate side to side on slopes; look behind you when backing up.

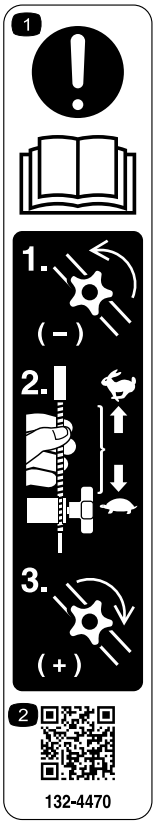

decal132-4470

132-4470

Traction Adjustment

1. Attention; read the *Operator's Manual*—1) Loosen the knob by turning it counterclockwise; 2) Pull the cable(s) away from the engine to decrease the traction, or push the cable(s) toward the engine to increase the traction; 3) Tighten the knob by turning it clockwise.
2. Scan the QR code for more information on traction adjustment.

Setup

Important: **Remove and discard the protective plastic sheet that covers the engine and any other plastic or wrapping on the machine.**

Important: **To prevent accidental starting, do not insert the key into the electric-start ignition until you are ready to start the engine (electric-start model only).**

1

Assembling the Handle

No Parts Required

Procedure

⚠ WARNING

Assembling and unfolding the handle improperly can damage the cables, causing an unsafe operating condition.

- **Do not damage the cables when unfolding the handle.**
- **If a cable is damaged, contact an Authorized Service Dealer.**

1. Rotate the upper handle so that it nests together with the lower handle (Figure 3), and tighten both knobs on the handle to lock the upper handle in place (Figure 4).

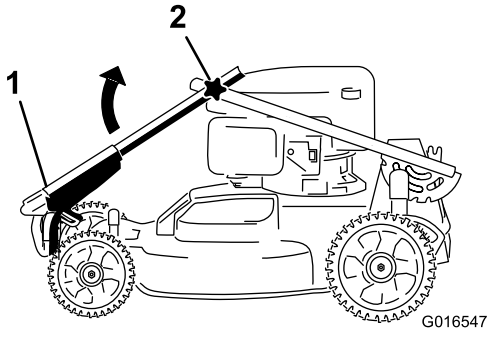

g016547

Figure 3

1. Upper handle
2. Knob (2)

2. Release the handle-lock lever (Figure 4).

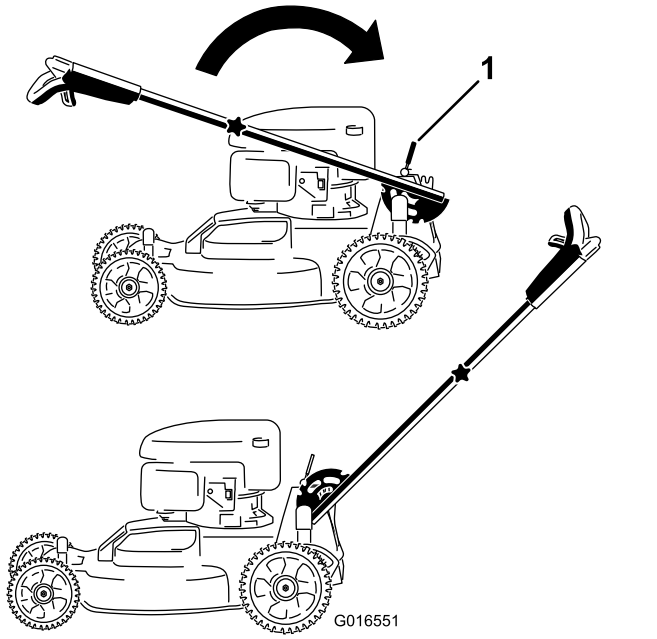

g016551

Figure 4

1. Handle-lock lever

3. Pull the handle rearward and lock it into position (Figure 4).

2

Installing the Blade-Control Bar

No Parts Required

Procedure

Install the blade-control bar into the upper handle (Figure 5).

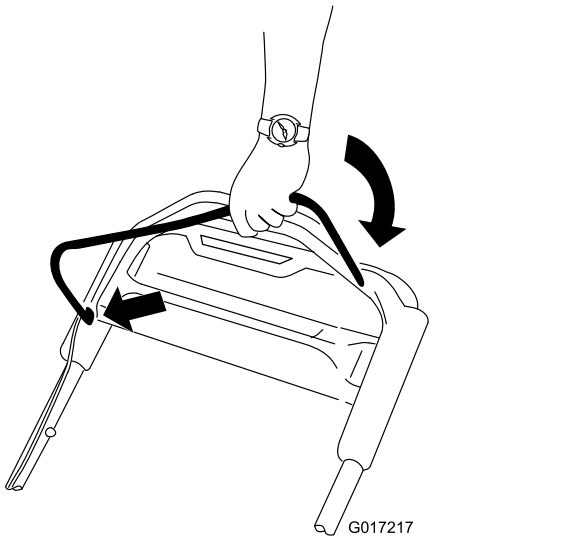

g017217

Figure 5

3

Filling the Engine with Oil

No Parts Required

Procedure

Important: **Your machine does not come with oil in the engine, but it does come with a bottle of oil. Before starting the engine, fill the engine with oil.**

Engine Oil Specifications

Engine oil capacity	0.53 L (18 fl oz)
Oil viscosity	SAE 30 or SAE 10W-30 detergent oil
API service classification	SJ or higher

1. Move the machine to a level surface.
2. Remove the dipstick by rotating the cap counterclockwise and pulling it out (Figure 6).

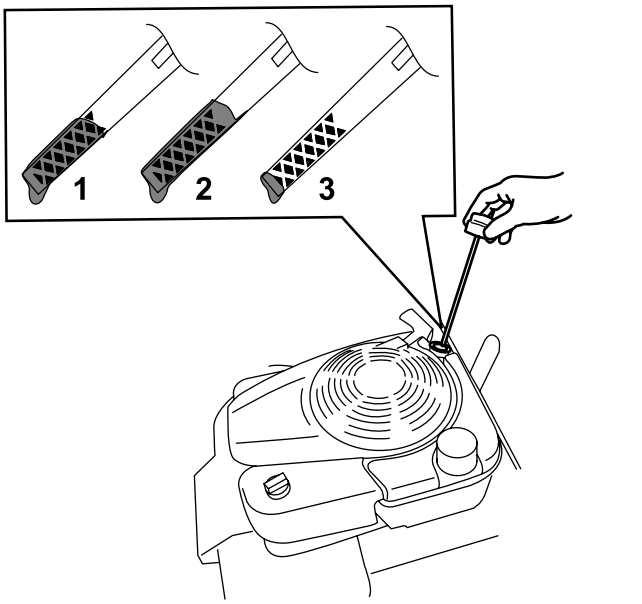

g193261

Figure 6

1. Full
2. High
3. Low

3. Carefully pour about 3/4 of the engine capacity of oil into the oil-fill tube.
4. Wait 3 minutes for the oil to settle in the engine.
5. Wipe the dipstick clean with a clean cloth.
6. Insert the dipstick into the oil-fill tube, then remove the dipstick.
7. Read the oil level on the dipstick (Figure 6).
   - If the oil level on the dipstick is too low, carefully pour a small amount of oil into the oil-fill tube, wait 3 minutes, and repeat steps 5 through 7 until the oil on the dipstick is at the correct level.
   - If the oil level on the dipstick is too high, drain the excess oil until the oil on the dipstick is at the correct level; refer to Changing the Engine Oil (page 19).

   Important: **If the oil level in the engine is too low or too high and you run the engine, you may damage the engine.**
8. Install the dipstick into the oil-fill tube securely.

Important: **Change the engine oil after the first 5 operating hours; change it yearly thereafter. Refer to Changing the Engine Oil (page 19).**

4

Charging the Battery

No Parts Required

Procedure

Electric-Start Model Only

Refer to Charging the Battery (page 20).

5

Assembling the Grass Bag

No Parts Required

Procedure

1. Slip the grass bag over the frame as shown in Figure 7.

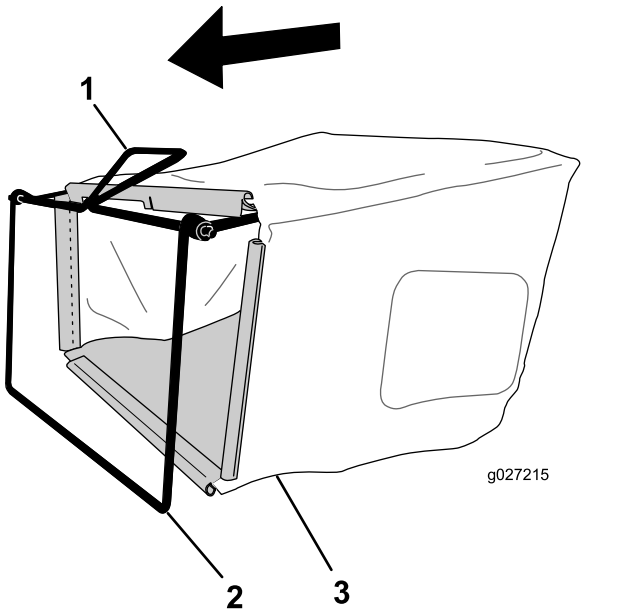

Figure 7

1. Handle
2. Frame
3. Grass bag

Note: Do not slip the bag over the handle (Figure 7).

2. Hook the bottom channel of the bag onto the bottom of the frame (Figure 8).

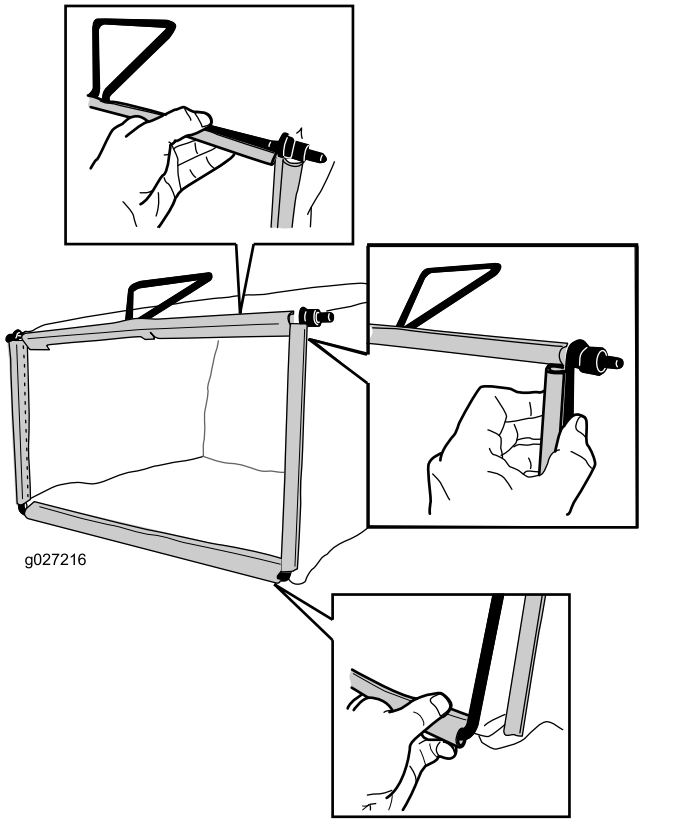

Figure 8

3. Hook the top and side channels of the bag onto the top and sides of the frame, respectively (Figure 8).

Product Overview

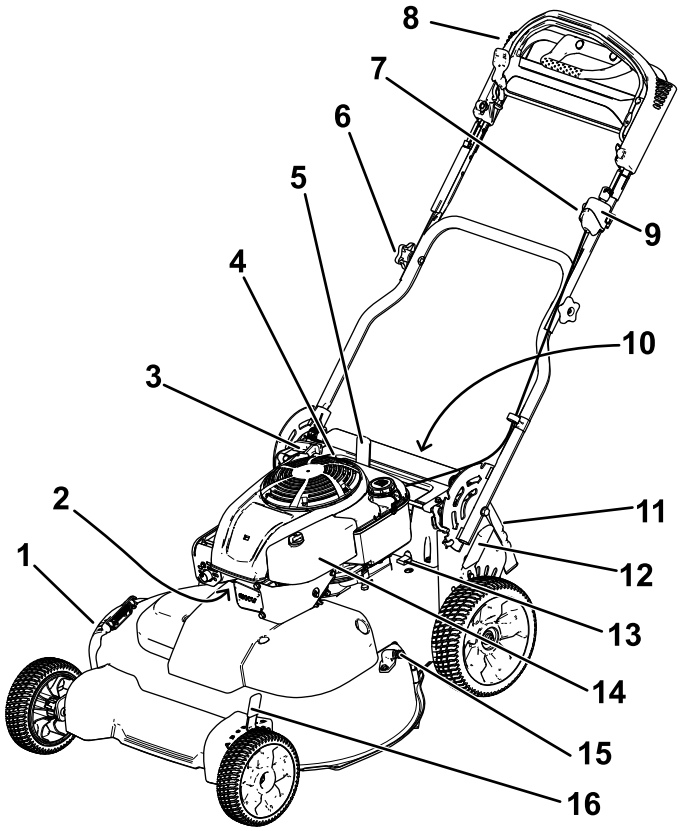

Figure 9

1. Side-discharge door
2. Spark plug
3. Recoil-start handle
4. Oil fill/dipstick
5. Handle-lock lever
6. Handle knob (2)
7. Adjustment knob for the self-propel drive
8. Upper handle
9. Ignition switch (electric-start model only) or toggle switch (standard model only)
10. Battery (electric-start model only; not shown)
11. Rear door
12. Rear cutting-height lever
13. Fuse
14. Air filter
15. Washout port
16. Front cutting-height lever

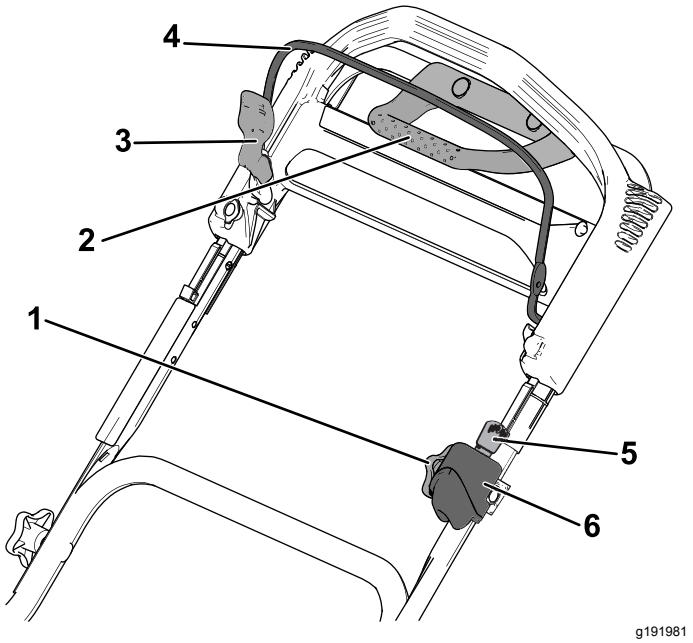

Figure 10
Upper handle

1. Adjustment knob for the self-propel drive
2. Traction-assist handle
3. Blade-control-bar lock
4. Blade-control bar
5. Ignition key (electric-start model only)
6. Ignition switch (electric-start model only) or toggle switch (standard model only)

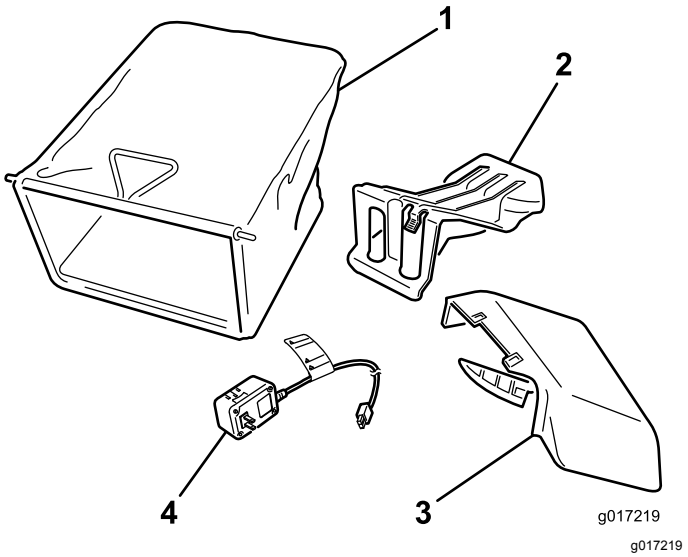

Figure 11

1. Grass bag
2. Rear-discharge plug (installed)
3. Side-discharge chute
4. Battery charger (electric-start model only)

Specifications

Model	Weight	Length	Width	Height
20976	65 kg (144 lb)	163 cm (64 in)	81 cm (32 in)	112 cm (44 in)
20978	68 kg (150 lb)			

Operation

Note: Determine the left and right sides of the machine from the normal operating position.

Before Operation

Before Operation Safety

General Safety

- Become familiar with the safe operation of the equipment, operator controls, and safety signs.
- Check that all guards and safety devices, such as doors and/or grass catchers, are in place and working properly.
- Always inspect the machine to ensure that the blades, blade bolts, and cutting assembly are not worn or damaged.
- Inspect the area where you will use the machine and remove all objects that the machine could throw.
- Adjusting the cutting height may bring you into contact with the moving blade, causing serious injury.
  - Shut off the engine, remove the ignition key (electric-start model only), and wait for all moving parts to stop.
  - Do not put your fingers under the housing when adjusting the cutting height.

Fuel Safety

⚠ DANGER

Fuel is extremely flammable and highly explosive. A fire or explosion from fuel can burn you and others and can damage property.

- **To prevent a static charge from igniting the fuel, place the container and/or machine directly on the ground before filling, not in a vehicle or on an object.**
- **Fill the fuel tank outdoors, in an open area, when the engine is cold. Wipe up any fuel that spills.**
- **Do not handle fuel when smoking or around an open flame or sparks.**
- **Store fuel in an approved container and keep it out of the reach of children.**

⚠ WARNING

Fuel is harmful or fatal if swallowed. Long-term exposure to vapors can cause serious injury and illness.

- **Avoid prolonged breathing of vapors.**
- **Keep your hands and face away from the nozzle and the fuel-tank opening.**
- **Keep fuel away from your eyes and skin.**

Filling the Fuel Tank

- For best results, use only clean, fresh, unleaded gasoline with an octane rating of 87 or higher ((R+M)/2 rating method).
- Oxygenated fuel with up to 10% ethanol or 15% MTBE by volume is acceptable.
- **Do not** use ethanol blends of gasoline, such as E15 or E85, with more than 10% ethanol by volume. Performance problems and/or engine damage may result, which may not be covered under the warranty.
- **Do not** use gasoline containing methanol.
- **Do not** store fuel either in the fuel tank or in fuel containers over the winter unless fuel stabilizer has been added to the fuel.
- **Do not** add oil to gasoline.

Fill the fuel tank with fresh unleaded regular gasoline from a major name-brand service station.

Important: **To reduce starting problems, add fuel stabilizer to the gasoline all season. Mix the stabilizer with gasoline less than 30 days old.**

1. Clean around the fuel-tank cap and remove the cap from the tank (Figure 12).

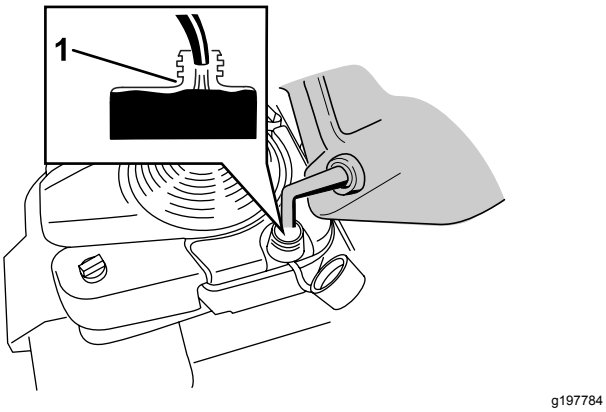

g197784

Figure 12

1. Do not fill the fuel tank above the bottom of the fuel-tank neck.

Important: **This machine is equipped with a premium fuel tank that uses a foam insert to prevent fuel agitation. Never remove the foam element, because it allows the engine to use all the fuel in the tank (Figure 13).**

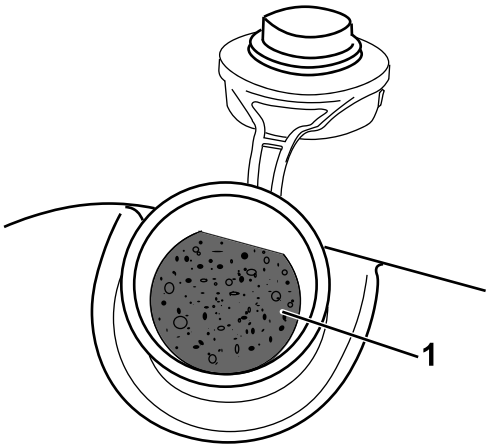

g197639

Figure 13

1. Foam insert

2. Install the fuel-tank cap and tighten it securely by hand.

Checking the Engine-Oil Level

1. Move the machine to a level surface.
2. Remove the dipstick by rotating the cap counterclockwise and pulling it out (Figure 14).

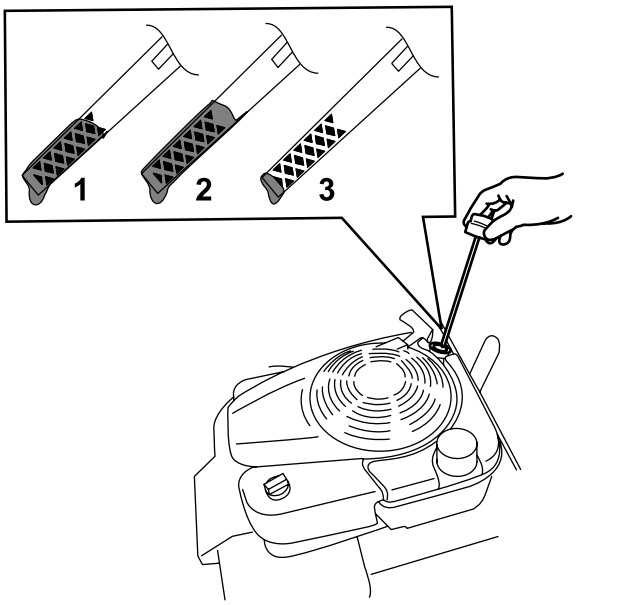

g193261

Figure 14

1. Full
2. High
3. Low

3. Wipe the dipstick clean with a clean cloth.
4. Insert the dipstick into the oil-fill tube, then remove the dipstick.
5. Read the oil level on the dipstick (Figure 14).
   - If the oil level on the dipstick is too low (Figure 14), carefully pour a small amount of SAE 30 or SAE 10W-30 detergent oil into the oil-fill tube, wait 3 minutes, and repeat steps 3 through 5 until the oil on the dipstick is at the correct level. For the oil type, refer to Changing the Engine Oil (page 19).
   - If the oil level on the dipstick is too high (Figure 14), drain the excess oil until the oil on the dipstick is at the correct level; refer to Changing the Engine Oil (page 19).

   Important: **If the oil level in the engine is too low or too high and you run the engine, you may damage the engine.**
6. Install the dipstick into the oil-fill tube securely.

Adjusting the Handle Height

You can raise or lower the handle to a position more comfortable for you.

1. Pull the handle-lock lever rearward to disengage the handle-lock pins (Figure 15).

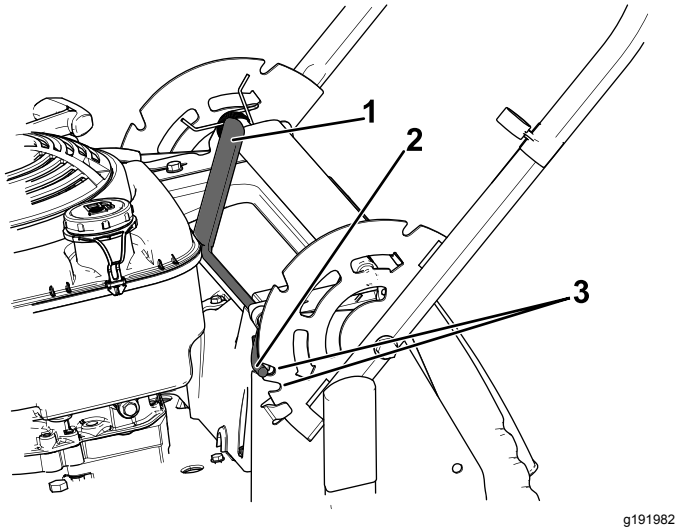

Figure 15

1. Handle-lock lever
2. Handle-lock pin (2)
3. Notches

2. Rotate the handle and align the desired notch in the handle bracket to the handle-lock pins; refer to Figure 15.
3. Release the handle-lock lever to secure the handle in place.

Adjusting the Cutting Height

⚠ CAUTION

If the engine has been running, the muffler will be hot and can severely burn you.

Keep away from the hot muffler.

Adjust the cutting height as desired; refer to Figure 16 and Figure 17.

Note: To raise the machine, move the front and rear cutting-height levers forward; to lower the machine, move the cutting-height levers rearward. Set all the wheels to the same height unless special circumstances require otherwise; refer to Operating Tips (page 16).

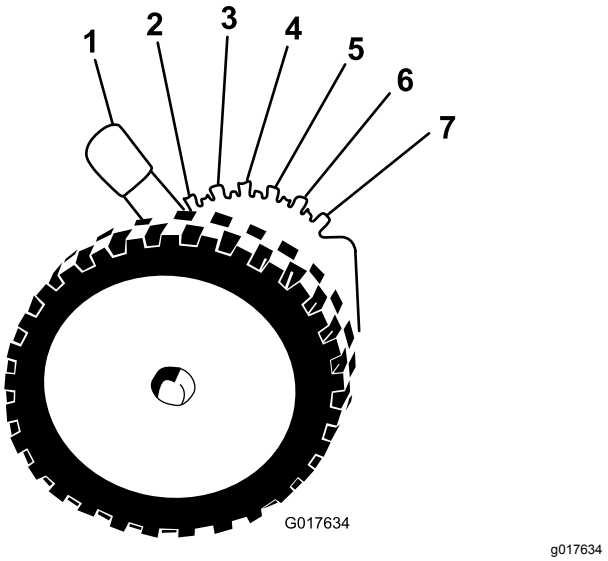

Figure 16

Front Cutting-Height Lever

1. A: 10.8 cm (4-1/4 inches)
2. B: 9.5 cm (3-3/4 inches)
3. C: 8.3 cm (3-1/4 inches)
4. D: 7.0 cm (2-3/4 inches)
5. E: 5.7 cm (2-1/4 inches)
6. F: 4.4 cm (1-3/4 inches)
7. G: 3.2 cm (1-1/4 inches)

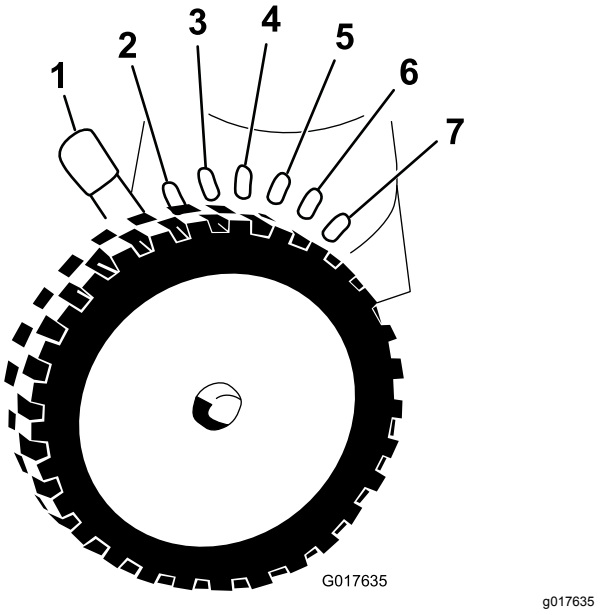

Figure 17

Rear Cutting-Height Lever

1. A: 10.8 cm (4-1/4 inches)
2. B: 9.5 cm (3-3/4 inches)
3. C: 8.3 cm (3-1/4 inches)
4. D: 7.0 cm (2-3/4 inches)
5. E: 5.7 cm (2-1/4 inches)
6. F: 4.4 cm (1-3/4 inches)
7. G: 3.2 cm (1-1/4 inches)

During Operation

During Operation Safety

General Safety

- Wear appropriate clothing, including eye protection; slip-resistant, substantial footwear; and hearing protection. Tie back long hair, secure loose clothing, and do not wear jewelry.
- Do not operate the machine while ill, tired, or under the influence of alcohol or drugs.
- The blade is sharp; contacting the blade can result in serious personal injury. Shut off the engine, remove the ignition key (electric-start model only), and wait for all moving parts to stop before leaving the operating position.
- When you release the blade-control bar, the engine should shut off and the blade should stop within 3 seconds. If not, stop using your machine immediately and contact an Authorized Service Dealer.
- Always look down and behind you before moving the machine in reverse.
- Operate the machine only in good visibility and appropriate weather conditions. Do not operate the machine when there is the risk of lighting.
- Wet grass or leaves can cause serious injury if you slip and contact the blade. Avoid mowing in wet conditions.
- Use extreme care when approaching blind corners, shrubs, trees, or other objects that may block your view.
- Watch for holes, ruts, bumps, rocks, or other hidden objects. Uneven terrain could cause a slip-and-fall accident.
- Stop the machine and inspect the blades after striking an object or if there is an abnormal vibration in the machine. Make all necessary repairs before resuming operation.
- Before leaving the operating position, shut off the engine, remove the ignition key (electric-start model only), and wait for all moving parts to stop.
- If the engine has been running, the muffler will be hot and can severely burn you. Keep away from the hot muffler.
- Check the grass catcher components and the discharge guard frequently and replace them with the manufacturer's recommended parts when necessary.
- Use accessories and attachments approved by The Toro® Company only.

Slope Safety

- Mow across the face of slopes; never up and down. Use extreme caution when changing direction on slopes.
- Do not mow on excessively steep slopes. Poor footing could cause a slip-and-fall accident.
- Mow with caution near drop-offs, ditches, or embankments.

Starting the Engine

Standard Model

Pull the recoil handle slowly until you feel resistance, then pull it sharply. Allow the rope to return to the engine slowly.

Note: If the machine does not start after several attempts, contact an Authorized Service Dealer.

Electric-start Model

You can start the engine on an electric-start model by using either the ignition key or the recoil-start handle.

- **Ignition Key:** Turn and hold the ignition key to the Start position (Figure 18); when the engine starts, release the key.

  Important: **Do not attempt to start the engine with the blade-control bar engaged; otherwise, you may blow the fuse.**

  Note: Do not hold the ignition key in the Start position for longer than 5 seconds to prevent burning out the starter motor.

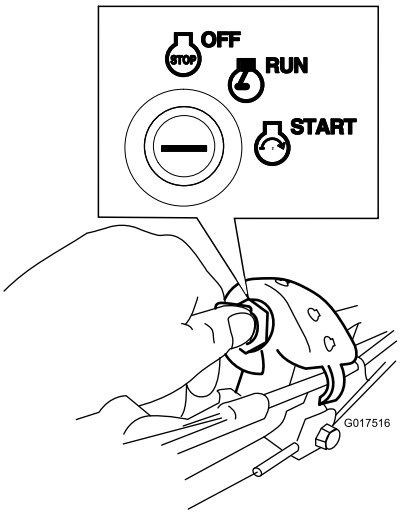

g017516

Figure 18

- **Recoil-Start Handle:**

1. Turn the ignition key to the RUN position (Figure 18).
2. Pull the recoil handle slowly to the rear until you feel resistance, then pull sharply. Allow the rope to return to the engine slowly.

Using the Self-Propel Drive

To operate the self-propel drive, simply walk with your hands gripping the upper handle and your elbows at your sides, and the machine will automatically keep pace with you (Figure 19).

Note: You can self-propel the machine with the blades engaged or disengaged.

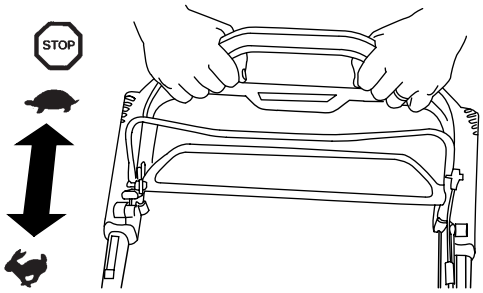

g193359

Figure 19

Note: Use the traction-assist handle in situations when you need more control than you have with the self-propel drive alone.

Shutting Off the Engine

Standard Model

Press the toggle switch (Figure 20) to the STOP position and hold it until the engine shuts off.

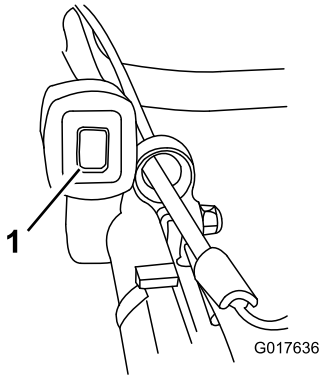

g017636

Figure 20

1. Toggle switch

Electric-Start Model

1. Turn the ignition key to the OFF position (Figure 21).

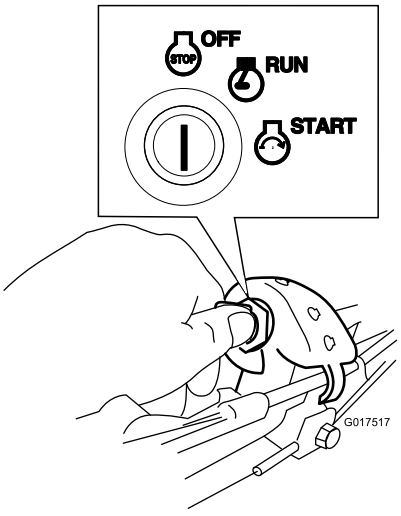

g017517

Figure 21

2. When the engine shuts off, remove the ignition key and take it with you when you leave the machine.

Engaging the Blades

When you start your engine, the blades do not turn. You must engage the blades to mow.

1. Pull the blade-control-bar lock back to the blade-control bar (Figure 22).

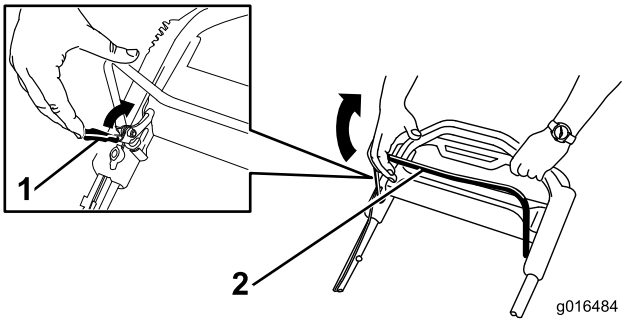

g016484

Figure 22

1. Blade-control bar lock
2. Blade-control bar

2. **Slowly** pull the blade-control bar back to the handle (Figure 22).
3. Hold the blade-control bar against the handle (Figure 23).

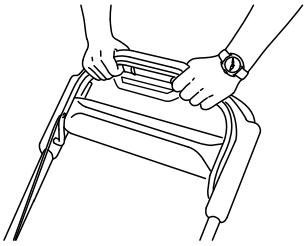

g193334

Figure 23

Disengaging the Blades

Release the blade-control bar (Figure 24).

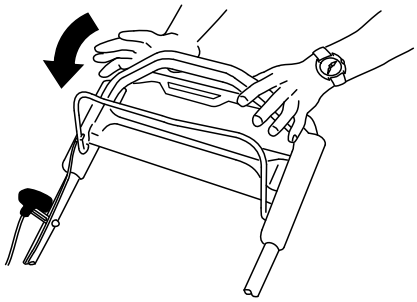

g193345

Figure 24

Important: **When you release the blade-control bar, the blades should stop within 3 seconds. If they do not stop properly, stop using your machine immediately and contact an Authorized Service Dealer.**

Checking the Blade-Stop System Operation

Service Interval: Before each use or daily

Check that the blades stop within 3 seconds of releasing the blade-control bar.

Using the Grass Bag

You can use the grass bag to check the blade-stop system.

1. Remove the rear-discharge plug.
2. Install the empty grass bag on the machine.
3. Start the engine.
4. Engage the blades.

   Note: The bag should begin to inflate, indicating that the blades are rotating.
5. While watching the bag, release the blade-control bar.

   Note: If the bag does not deflate within 3 seconds of releasing the blade-control bar, the blade-stop system may be deteriorating and, if ignored, could result in an unsafe operating condition. Have the machine inspected and serviced by an Authorized Service Dealer.
6. Shut off the engine and wait for all moving parts to stop.

Not Using the Grass Bag

1. Move the machine onto a paved surface in a non-windy area.
2. Set all 4 wheels to the 89 mm (3-1/2 inch) cutting height setting.
3. Take a half sheet of newspaper and crumple it into a ball small enough to go under the machine housing (about 76 mm (3 inches) in diameter).
4. Place the newspaper ball about 13 cm (5 inches) in front of the machine.
5. Start the engine.
6. Engage the blades.
7. Release the blade-control bar and begin counting out 3 seconds.
8. On the count of 3, push the machine quickly forward over the newspaper.
9. Shut off the engine and wait for all moving parts to stop.
10. Go to the front of the machine and check the newspaper ball.

    Note: If the newspaper ball did not go under the machine, repeat steps 4 through 10.
11. If the newspaper is unravelled or shredded, the blades did not stop properly, which could result in an unsafe operating condition. Contact an Authorized Service Dealer.

Recycling the Clippings

This machine comes from the factory ready to recycle grass and leaf clippings back into the lawn. To prepare the machine to recycle, do the following:

- If the side-discharge chute is on the machine, remove it and lower the side-discharge door; refer to Removing the Side-Discharge Chute (page 16).
- If the grass bag is on the machine, remove it; refer to Removing the Grass Bag (page 15).
- If the rear-discharge plug is not installed, grip it by the handle, raise the rear door, and insert it into the rear-discharge chute until the latch locks into place; refer to Figure 25.

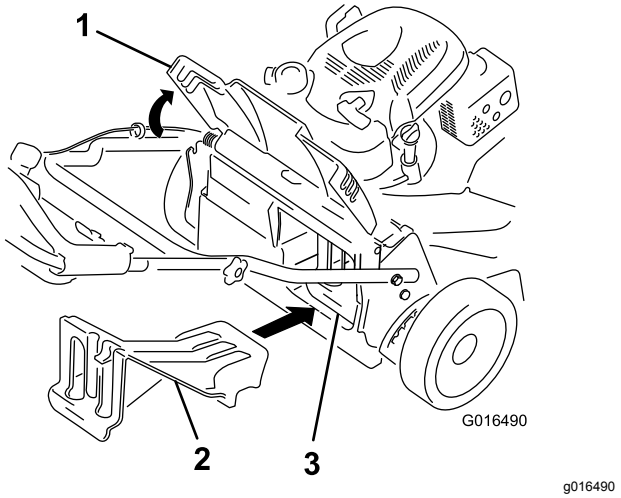

Figure 25

1. Rear door
2. Rear-discharge plug
3. Rear-discharge plug installed

⚠ WARNING

Operating the machine to recycle lawn clippings without the plug in place allows objects to be thrown toward you or bystanders. Also, contact with the blades could occur. Thrown objects or blade contact can cause serious injury or death.

Ensure that the rear-discharge plug is in place before you recycle the clippings. Never engage the blades without either the rear-discharge plug or the grass bag installed on the machine.

Bagging the Clippings

Use the grass bag when you want to collect grass and leaf clippings from the lawn.

If the side-discharge chute is on the mower, remove it before bagging the clippings; refer to Removing the Side-Discharge Chute (page 16).

Installing the Grass Bag

1. Raise and hold up the rear door (Figure 26).

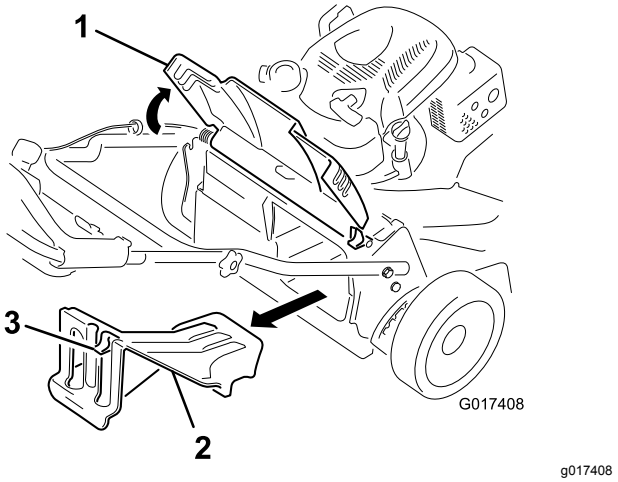

Figure 26

1. Rear door
2. Rear-discharge plug
3. Latch

2. Remove the rear-discharge plug by pulling down on the latch with your thumb and pulling the plug out from the machine (Figure 26).
3. Install the bag rod into the notches at the base of the handle and rock the bag back and forth to ensure that the rod is seated at the bottom of both notches; refer to Figure 27.

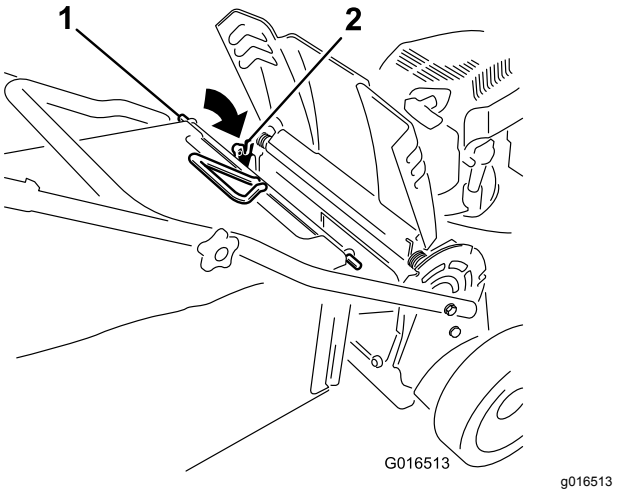

Figure 27

1. Bag rod
2. Notch (2)

4. Lower the rear door until it rests on the grass bag.

Removing the Grass Bag

To remove the bag, reverse the steps in Installing the Grass Bag (page 15).

Side-Discharging the Clippings

Use the side discharge for cutting very tall grass.

If the bag is on the machine, remove it and insert the rear-discharge plug; refer to Removing the Grass Bag (page 15) before side-discharging the clippings.

Important: **Ensure that the rear-discharge plug is in place before you recycle the clippings (Figure 25).**

Installing the Side-Discharge Chute

1. Lift open the side-discharge door (Figure 28).

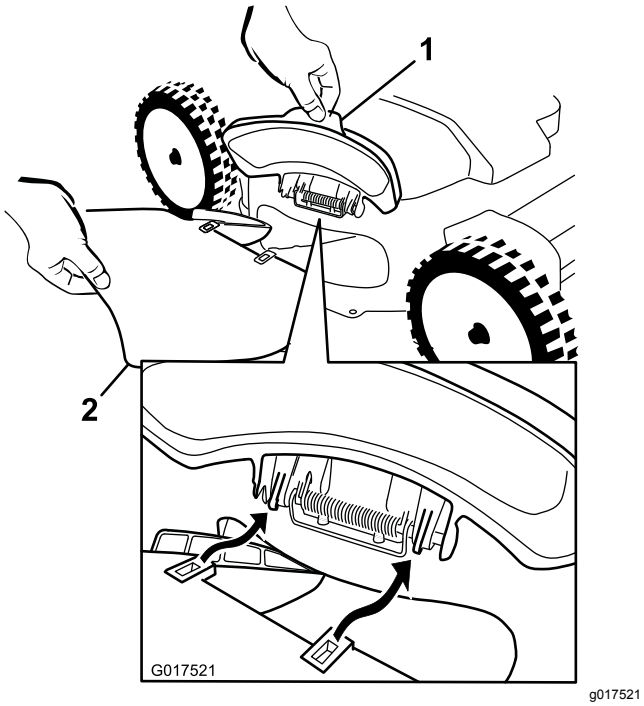

g017521

Figure 28

1. Side-discharge door
2. Side-discharge chute

2. Install the side-discharge chute as shown in Figure 28 and Figure 29, and close the door onto the chute.

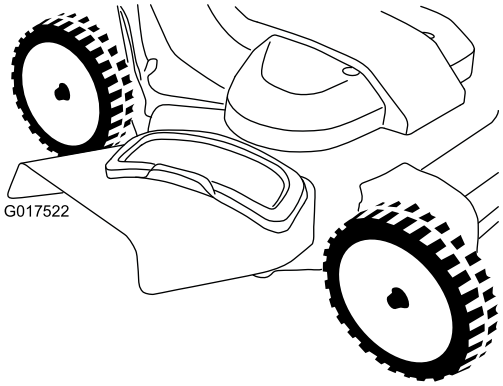

g017522

Figure 29

Removing the Side-Discharge Chute

To remove the side-discharge chute, reverse the steps in Installing the Side-Discharge Chute (page 16).

Operating Tips

General Mowing Tips

- Inspect the area where you will use the machine and remove all objects that the machine could throw.
- Avoid striking solid objects with the blades. Never deliberately mow over any object.
- If the machine strikes an object or starts to vibrate, immediately shut off the engine, remove the key (if equipped), disconnect the wire from the spark plug, and examine the machine for damage.
- For best performance, install new blades before the cutting season begins.
- Replace the blades when necessary with Toro replacement blades.

Cutting Grass

- Cut only about a third of the grass blade at a time. Do not cut below 51 mm (2 inches) unless the grass is sparse or it is late fall when grass growth begins to slow down.
- When cutting grass over 15 cm (6 inches) tall, mow at the highest cutting height setting and walk slower; then mow again at a lower setting for the best lawn appearance. If the grass is too long, the machine may plug and cause the engine to stall.
- Wet grass and leaves tend to clump on the yard and can cause the machine to plug or the engine to stall. Avoid mowing in wet conditions.

- Be aware of a potential fire hazard in very dry conditions, follow all local fire warnings, and keep the machine free of dry grass and leaf debris.
- Alternate the mowing direction. This helps disperse the clippings over the lawn for even fertilization.
- If the finished lawn appearance is unsatisfactory, try 1 or more of the following:
  - Replace the blades or have them sharpened.
  - Walk at a slower pace while mowing.
  - Raise the cutting height on your machine.
  - Cut the grass more frequently.
  - Overlap cutting swaths instead of cutting a full swath with each pass.

Cutting Leaves

- After cutting the lawn, ensure that half of the lawn shows through the cut leaf cover. You may need to make more than a single pass over the leaves.
- If there are more than 13 cm (5 inches) of leaves on the lawn, mow at a higher cutting height and then again at the desired cutting height.
- Slow down your mowing speed if the machine does not cut the leaves finely enough.

After Operation

After Operation Safety

General Safety

- Clean grass and debris from the machine to help prevent fires. Clean up oil or fuel spills.
- Allow the engine to cool before storing the machine in any enclosure.
- Never store the machine or fuel container where there is an open flame, spark, or pilot light, such as on a water heater or on other appliances.

Hauling Safety

- Remove the ignition key (if equipped) before loading the machine for hauling.
- Use care when loading or unloading the machine.
- Secure the machine from rolling.

Cleaning under the Machine

Service Interval: Before each use or daily

1. Move the machine to a level surface.
2. Shut off the engine and wait for all moving parts to stop before leaving the operating position.
3. Lower the machine to its lowest cutting-height setting. Refer to Adjusting the Cutting Height (page 11).
4. Attach a hose to the washout fitting, and turn the water on high (Figure 30).

   Note: Spread petroleum jelly on the washout fitting O-ring to make the coupling slide on easier and protect the O-ring.

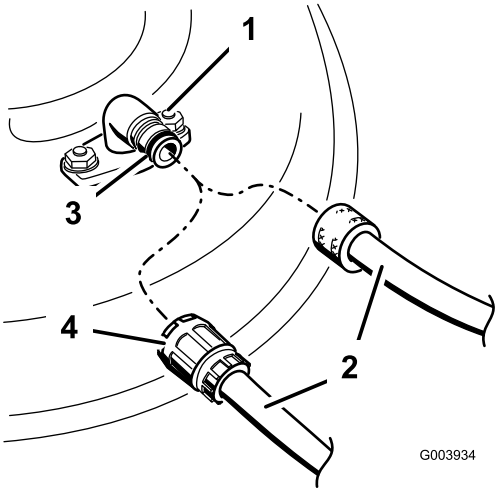

g003934

Figure 30

1. Washout fitting
2. Hose
3. O-ring
4. Coupling

5. Start the engine, engage the blade-control lever, and let the machine run for 1 to 3 minutes with the blades turning.
6. Disengage the blade-control lever, shut off the engine, and wait for all moving parts to stop.
7. Shut off the water and remove the coupling from the washout fitting.

   Note: If the machine is not clean after a single washing, soak it and let it stand for 30 minutes. Then repeat the process.
8. Run the machine again and engage the blades for 1 to 3 minutes to remove the excess water.

⚠ WARNING

A broken or missing washout fitting could expose you and others to thrown objects or blade contact. Contact with a blade or thrown debris can cause injury or death.

- **Replace a broken or missing washout fitting immediately, before using the machine again.**
- **Never put your hands or feet under the machine or through openings in the machine.**

Maintenance

Recommended Maintenance Schedule(s)

Maintenance Service Interval	Maintenance Procedure
After the first 5 hours	• Change the engine oil.
Before each use or daily	• Check the blade-brake-clutch operation. • Clean grass clippings and dirt from under the machine. • Check the air filter and clean or replace it, if necessary. • Check the cutting blades.
Every 25 hours	• Charge the battery for 24 hours (electric-start model only).
Every 50 hours	• Clean the air filter; clean it more frequently in dusty operating conditions. • Change the engine oil. • Service the blade-drive system.
Every 200 hours	• Replace the air filter; replace it more frequently in dusty operation conditions.
Yearly	• Service the air filter; service it more frequently in dusty operating conditions. • Change the engine oil. • Service the blades.
Yearly or before storage	• Charge the battery (electric-start model only). • Empty the fuel tank before repairs as directed and before yearly storage.

Important: **Refer to your engine manual for additional maintenance procedures.**

Replacement parts are available from an Authorized Service Dealer or at www.torodealer.com (US customers only). Engine parts are only available form an Authorized Service Dealer.

Maintenance Safety

- Disconnect the spark-plug wire from the spark plug and remove the ignition key (electric-start model only) before performing any maintenance procedure.
- Wear gloves and eye protection when servicing the machine.
- The blade is sharp; contacting the blade can result in serious personal injury. Wear gloves when servicing the blade.
- Never tamper with safety devices. Check their proper operation regularly.
- Tipping the machine may cause the fuel to leak. Fuel is flammable and explosive, and can cause personal injury. Run the engine dry to remove the fuel with a hand pump; never siphon the fuel.
- To ensure optimum performance and continued safety certification of the machine, use only genuine Toro replacement parts and accessories. Replacement parts and accessories made by other manufacturers could be dangerous, and such use could void the product warranty.

Preparing for Maintenance

1. Shut off the engine, remove the ignition key (if equipped), and wait for all moving parts to stop.
2. Disconnect the spark-plug wire from the spark plug (Figure 31).

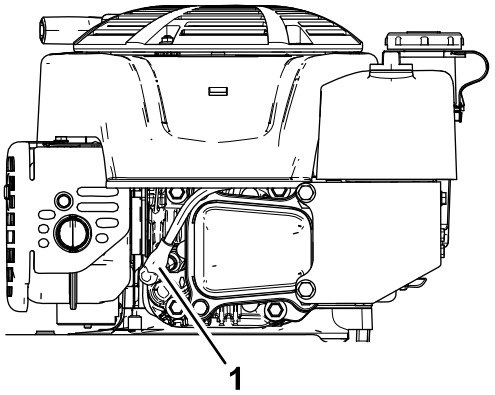

g191983

Figure 31

1. Spark-plug wire

3. After performing the maintenance procedure(s), connect the spark-plug wire to the spark plug.

Important: **Before tipping the machine to change the oil or replace the blades, allow the fuel tank to run dry through normal usage. If you must tip the machine prior to running out of fuel, use a hand fuel pump to remove the fuel. Always tip the machine onto its side, with the dipstick down.**

⚠ WARNING

Tipping the machine may cause the fuel to leak. Fuel is flammable, explosive, and can cause personal injury.

Run the engine dry or remove the fuel with a hand pump; never siphon.

Servicing the Air Filter

Service Interval: Before each use or daily—Check the air filter and clean or replace it, if necessary.

Every 50 hours—Clean the air filter; clean it more frequently in dusty operating conditions.

Yearly—Service the air filter; service it more frequently in dusty operating conditions.

Every 200 hours—Replace the air filter; replace it more frequently in dusty operation conditions.

1. Loosen the fastener and remove the air-filter cover (Figure 32).

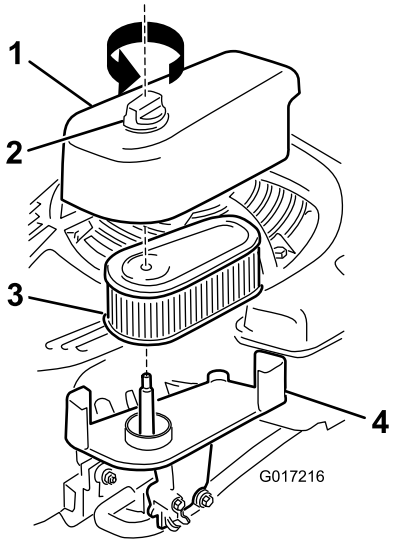

g017216

Figure 32

1. Cover
2. Fastener
3. Filter
4. Base

2. Remove and inspect the filter.
   - If the filter is damaged or is wet with oil or fuel, replace it.
   - If the filter is dirty, tap it on a hard surface several times or blow the debris outward from the interior of the filter using compressed air at less than 207 kPa (30 psi).

     Note: Do not brush or blow dirt from the outside of the filter; either forces dirt into the fibers.
3. Clean the air-filter body and cover using a damp rag. **Keep dirt away from the air opening.**
4. Install the filter onto the base.
5. Install the cover and screw the fastener down securely.

Changing the Engine Oil

Service Interval: After the first 5 hours

Every 50 hours

Yearly

Note: Run the engine a few minutes before changing the oil to warm it. Warm oil flows better and carries more contaminants.

Engine Oil Specifications

Engine oil capacity	0.53 L (18 fl oz)
Oil viscosity	SAE 30 or SAE 10W-30 detergent oil
API service classification	SJ or higher

1. Move the machine to a level surface.
2. Refer to Preparing for Maintenance (page 18).
3. Remove the dipstick by rotating the cap counterclockwise and pulling it out (Figure 33).

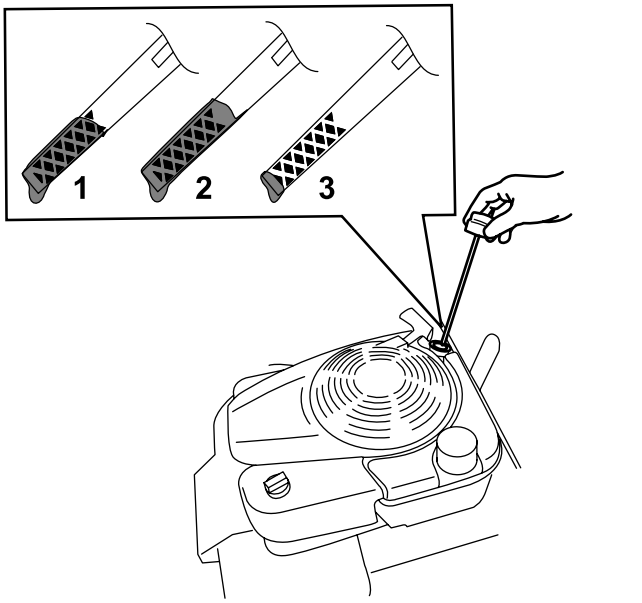

g193261

Figure 33

1. Full
2. High
3. Low

4. Tip the machine onto its side (so that the air filter is up) to drain the used oil from the oil-fill tube (Figure 34).

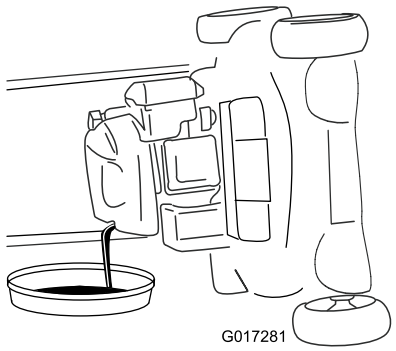

g017281

Figure 34

5. After draining the used oil, return the machine to the operating position.
6. Carefully pour about 3/4 of the engine capacity of oil into the oil-fill tube.
7. Wait 3 minutes for the oil to settle in the engine.
8. Wipe the dipstick clean with a clean cloth.
9. Insert the dipstick into the oil-fill tube, then remove the dipstick.
10. Read the oil level on the dipstick (Figure 33).
    - If the oil level on the dipstick is too low, carefully pour a small amount of oil into the oil-fill tube, wait 3 minutes, and repeat steps 8 through 10 until the oil level on the dipstick is correct.
    - If the oil level on the dipstick is too high, drain the excess oil until the oil level on the dipstick is correct.
11. Install the dipstick into the oil-fill tube securely.
12. Recycle the used oil properly.

Charging the Battery

Electric-Start Model Only

Service Interval: Every 25 hours

Yearly or before storage

⚠ WARNING

CALIFORNIA
Proposition 65 Warning

Battery posts, terminals, and related accessories contain lead and lead compounds, chemicals known to the State of California to cause cancer and reproductive harm. Wash hands after handling.

Charge the battery for 24 hours initially, then monthly (every 25 starts) or as needed. Always use the charger in a sheltered area, and charge the battery at room temperature (about 22°C or 70°F) whenever possible.

Note: The machine is not equipped with an alternator charging system.

1. Connect the charger to the wire harness located below the ignition key (Figure 35).

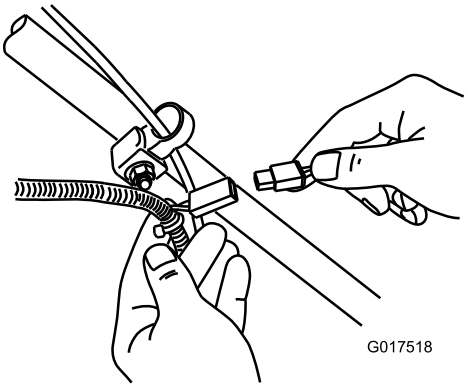

g017518

Figure 35

2. Plug the charger into a wall outlet.

   Note: When the battery no longer holds a charge, recycle or dispose of the lead-acid battery according to local codes.

Note: Your battery charger may have a 2-color LED display that indicates the following states of charging:

- A red light indicates that the charger is charging the battery.
- A green light indicates that the charger is fully charged or is disconnected from the battery.
- A flashing light that alternates between red and green indicates that the battery is nearly fully charged. This state lasts only a few minutes until the battery is fully charged.

Replacing the Fuse

Electric-Start Model Only

If the battery does not charge or the engine does not run with the electric starter, the fuse may be blown. Replace it with a 40 A plug-in type fuse.

Important: **You cannot start the machine with the electric starter or charge the battery unless a working fuse is installed.**

1. Open the sealed fuse holder and replace the fuse (Figure 36).

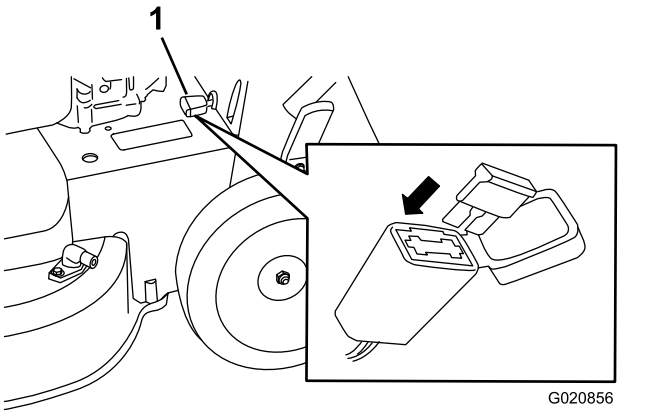

Figure 36

1. Fuse holder

2. Close the cover to the fuse holder, and ensure that it is sealed tightly.

Replacing the Battery

Electric-start model only

Removing the Old Battery

1. Contact an Authorized Toro Parts Dealer to obtain a replacement battery.
2. Remove the belt cover; refer to step 1 of Servicing the Blade-Drive System (page 22).
3. Remove the rear-discharge plug.
4. Move the handle to the vertical position.
5. Remove the 4 small bolts that hold the rear door and handle-lock-lever assembly in place.
6. Fold the handle all the way forward.
7. Remove the rear door and handle-lock lever assembly (Figure 37).

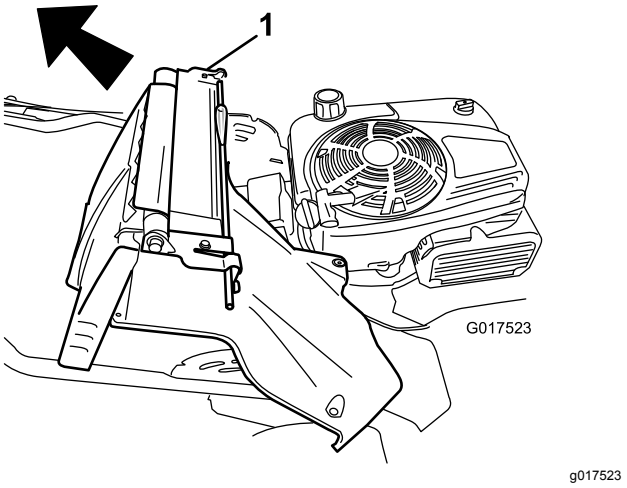

Figure 37

1. Rear door and handle-lock-lever assembly

8. Remove the cover from the battery.
9. Disconnect the leads from the battery.
10. Remove and battery and recycle it.

    Note: Recycle the battery according to your state and local regulations.

Installing the New Battery

1. Clean the battery-holding area on the machine housing.
2. Set the new battery in place on the machine housing.
3. Connect the leads to the new battery.

    Note: Ensure that you connect the black (negative) wire to the negative (-) terminal and the red (positive) wire to the positive (+) terminal.

4. Install the cover onto the battery.

    Note: Ensure that the cover fits properly over the wire harness.

5. Install the rear door and handle-lock-lever assembly onto the machine.
6. Raise the handle to the vertical position.
7. Secure the shroud with the 4 small bolts that you removed in step 5 of Removing the Old Battery (page 21).
8. Install the rear-discharge plug.
9. Return the handle to the operating position.

Adjusting the Self-Propel Drive

Whenever you install a new self-propel cable or if the self-propel drive is out of adjustment, adjust the self-propel drive.

1. Turn the adjustment knob counterclockwise to loosen the cable adjustment (Figure 38).

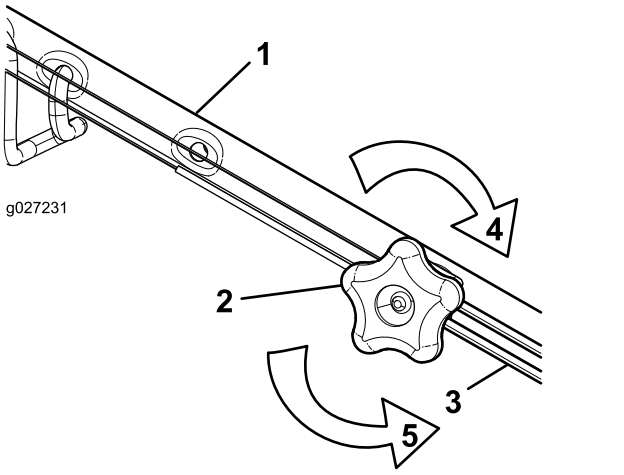

Figure 38

1. Handle (left side)
2. Adjustment knob
3. Self-propel-drive cable
4. Turn the knob clockwise to tighten the adjustment.
5. Turn the knob counterclockwise to loosen the adjustment.

2. Adjust the tension on the cable (Figure 38) by pulling it back or pushing it forward and holding that position.

   Note: Push the cable toward the engine to increase the traction; pull the cable away from the engine to decrease the traction.

3. Turn the adjustment knob clockwise to tighten the cable adjustment.

   Note: Tighten the knob firmly by hand.

Servicing the Blade-Drive System

Service Interval: Every 50 hours

1. Remove the blade-drive system cover (Figure 39).

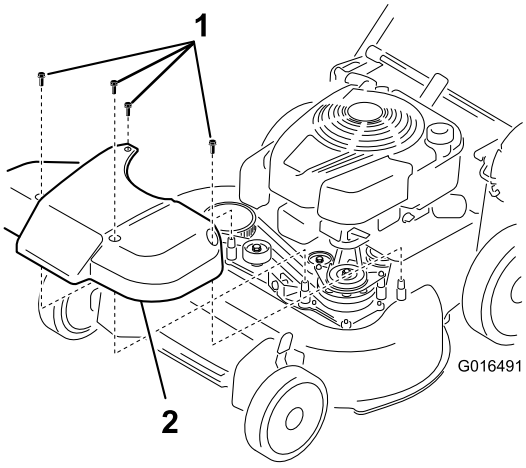

Figure 39

1. Bolts
2. Cover

2. Brush or blow out debris from the inside of the shield and around all the parts.
3. Hold a 0.25 mm (0.010 inch) feeler gauge, a piece of paper, or a note card against the wall and slide it down behind the belt tension spring.

   Note: If there is a visible gap between the gauge and the spring, tighten the adjusting bolt and the nut until the paper barely slides freely in and out of the gap (Figure 40).

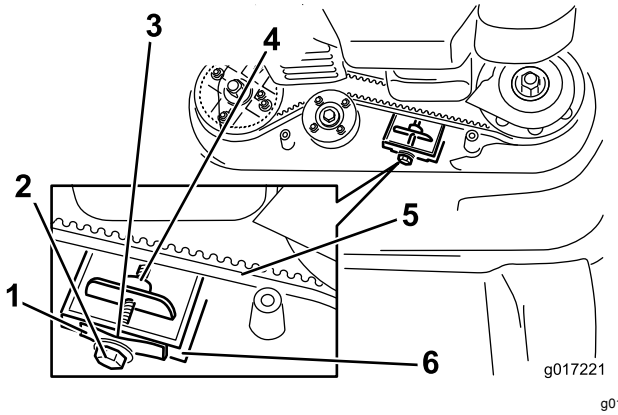

Figure 40

1. Belt-tension spring
2. Adjusting bolt
3. Gap
4. Adjusting nut
5. Blade-drive belt
6. Wall

Important: **Do not overtighten the adjusting bolt. This could damage the blade-drive belt.**

4. Install the blade-drive system cover that you previously removed.

Servicing the Blades

Service Interval: Yearly

***Important:* You will need a torque wrench to install the blades properly. If you do not have a torque wrench or are uncomfortable performing this procedure, contact an Authorized Service Dealer.**

Examine the blades whenever you run out of fuel. If the blades are damaged or cracked, replace them immediately. If the blade edges are dull or nicked, have them sharpened and balanced, or replace them.

⚠ DANGER

A worn or damaged blade can break, and a piece of the blade could be thrown toward you or bystanders, resulting in serious personal injury or death.

- **Inspect the blades periodically for wear or damage.**
- **Replace a worn or damaged blade.**

Note: Maintain sharp blades throughout the cutting season, because sharp blades cut cleanly without tearing or shredding the grass blades.

Preparing to Service the Cutting Blades

1. Lock the handle in the vertical position (Figure 41); refer to Adjusting the Handle Height (page 11).

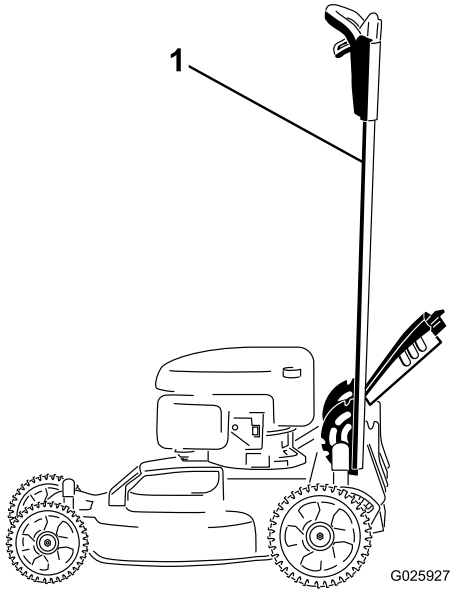

g025927

Figure 41

1. Handle locked in the vertical position

2. Tip the machine onto its side, with the dipstick down, until the upper handle rests on the ground.

Inspecting the Blades

Service Interval: Before each use or daily

1. Inspect the cutting edges (Figure 42). If the edges are not sharp or have nicks, remove the blades and have them sharpened or replace them.

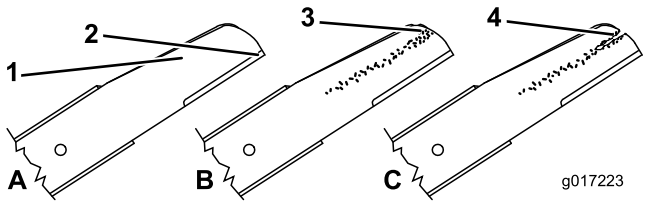

g017223

Figure 42

1. Cutting edge
2. Curved area
3. Wear/slot forming
4. Crack

2. Inspect the blades themselves, especially the curved area (Figure 42). If you notice any damage, wear, or a slot forming in this area, immediately replace it with a new blade.

⚠ DANGER

If you allow a blade to wear, a slot will form between the sail and flat part of the blade. Eventually a piece of the blade may break off and be thrown from under the housing, possibly resulting in serious injury to you or bystanders.

- **Inspect the blade periodically for wear or damage.**
- **Never try to straighten a blade that is bent or weld a broken or cracked blade.**
- **Replace a worn or damaged blade.**

3. Check for bent blades; refer to Checking for Bent Blades (page 24).

Checking for Bent Blades

1. Rotate the blades to the position shown in Figure 43.

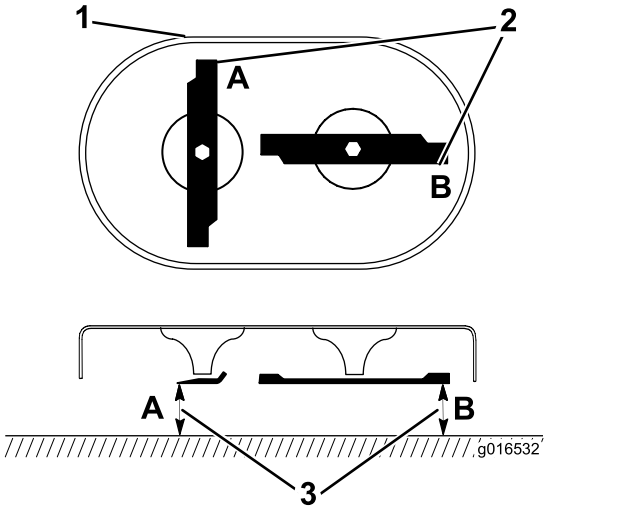

g016532

Figure 43

1. Front of cutting deck
2. Measure at locations A and B
3. Measure from the cutting edge to a smooth, level surface

2. Measure from a level surface to the cutting edges at locations **A** and **B** (Figure 43), and record both dimensions.
3. Rotate the blades so that their opposite ends are at locations **A** and **B** (Figure 43).
4. Repeat the measurements in step 2 and record them.

   Note: If the difference between the dimensions **A** and **B** obtained in steps 2 and 4 exceeds 3 mm (1/8 inch), the blade is bent and you will need to replace it. Refer to Removing the Blades (page 25) and Installing the Blades (page 25).

⚠ WARNING

A blade that is bent or damaged could break apart and could seriously injure or kill you or bystanders.

- **Always replace a bent or damaged blade with a new blade.**
- **Never file or create sharp notches in the edges or surfaces of a blade.**

Removing the Blades

Replace the blades when the machine hits a solid object or when a blade is out of balance or bent. Use only genuine Toro replacement blades.

1. Use a block of wood to hold each blade steady and turn the blade bolt counterclockwise as shown in Figure 44.

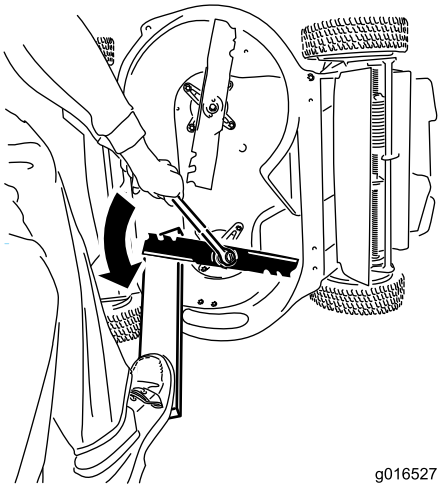

g016527

Figure 44

2. Remove each blade as shown in Figure 45.

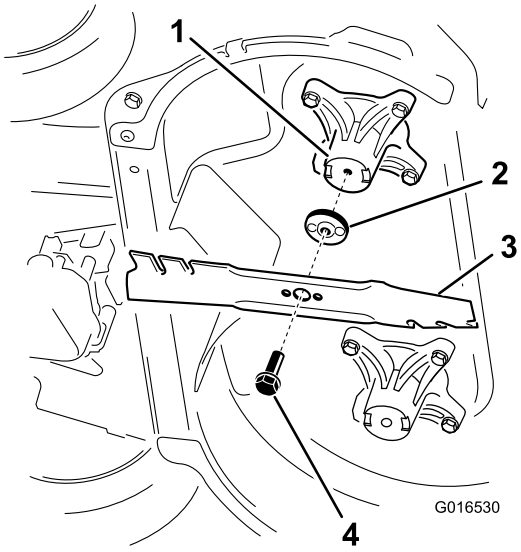

g016530

Figure 45

1. Spindle (2)
2. Blade driver (2)
3. Blade (2)
4. Blade bolt (2)

3. Inspect the pins on the blade drivers for wear and damage.

Installing the Blades

1. Install the first blade so that it is horizontal, along with all mounting hardware as shown in Figure 45.

   Note: Tighten the bolt with your fingers.

   Important: **Position the curved ends of the blades to point toward the machine housing. Be sure to nest the raised areas on each blade driver with the recesses in the head of its corresponding spindle, and the pins on the other side of each blade driver with the holes in its corresponding blade.**

2. Steady each blade with a board and turn the blade bolt clockwise with a torque wrench as shown in Figure 46; torque the blade bolt to 82 N·m (60 ft-lb).

   Important: **A bolt torqued to 82 N·m (60 ft-lb) is very tight. Put your weight behind the wrench and tighten the bolt securely. This bolt is very difficult to overtighten.**

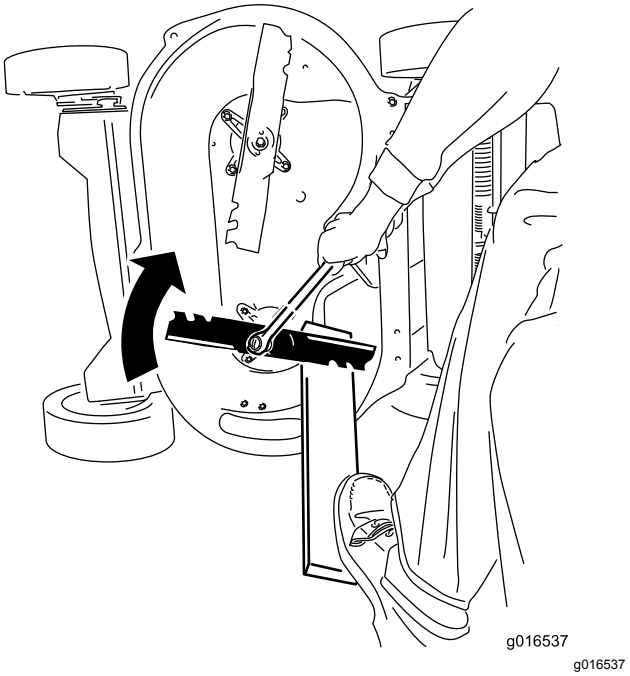

g016537

Figure 46

3. Rotate the installed blade 1/4 turn until it is vertical, and install the other blade in the same manner as the first (refer to step 1).

   Note: The blades should be perpendicular, forming an inverted “T” as shown in Figure 47.

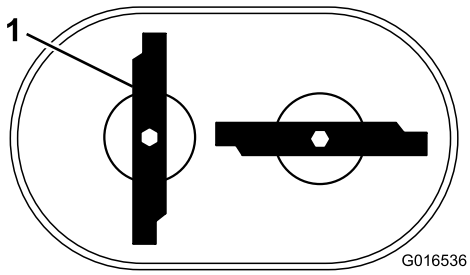

g016536

Figure 47

1. Blade (2)

4. Tighten the second blade; refer to step 2.
5. Rotate the blades by hand a full 360° turn to ensure that they do not touch.

   Note: If the blades touch each other, they are not mounted correctly. Repeat steps 1 through 3, until the blades no longer touch each other.

⚠ WARNING

Incorrectly installing the blades could damage the machine or cause an injury to you or bystanders.

Use care when installing the blades.

Storage

Store the machine in a cool, clean, dry place.

General Information

1. Perform the recommended annual maintenance procedures; refer to Maintenance (page 18).
2. Clean under the machine housing; refer to Cleaning under the Machine (page 17).
3. Remove chaff, dirt, and grime from the external parts of the engine, the shrouding, and the top of the machine.
4. Check the condition of the blades; refer to Inspecting the Blades (page 23).
5. Service the air filter; refer to Servicing the Air Filter (page 19).
6. Tighten all nuts, bolts, and screws.
7. Touch up all rusted or chipped paint surfaces with paint available from an Authorized Service Dealer.
8. **Electric-start model only:** Charge the battery for 24 hours, then unplug the battery charger and store the machine in an unheated area. If you must store the machine in a heated area, you must charge the battery every 90 days.
9. Fold the handle for storage; refer to Adjusting the Handle Height (page 11).

Preparing the Fuel System

⚠ WARNING

Fuel can vaporize if you store it over long periods of time and explode if it comes into contact with an open flame.

- **Do not store fuel over long periods of time.**
- **Do not store the machine with fuel in the fuel tank or the carburetor in an enclosure with an open flame. (For example, a furnace or a water heater pilot light.)**
- **Allow the engine to cool before storing it in any enclosure.**

On the last refueling of the year, add fuel stabilizer to the fuel as directed by the engine manufacturer. Empty the fuel tank when mowing the last time before storing the machine.

1. Run the machine until the engine shuts off from running out of fuel.

2. Start the engine again and allow it to run until it shuts off. When you can no longer start the engine, it is sufficiently dry.

Preparing the Engine

1. While the engine is still warm, change the engine oil; refer to Changing the Engine Oil (page 19).
2. Disconnect the wire from the spark plug and remove the ignition key (electric-start model only).
3. Remove the spark plug.
4. Using an oil can, add about 30 ml (1 fl oz), of motor oil to the engine through the spark-plug hole.
5. Slowly pull the starter rope several times to distribute oil throughout the cylinder.
6. Install the spark plug but do not connect the wire to the spark plug. Secure the wire so that it does not come into contact with the spark plug.

Removing the Machine from Storage

1. Unfold the handle; refer to Adjusting the Handle Height (page 11).
2. Check and tighten all fasteners.
3. Remove the spark plug and spin the engine rapidly using the starter to blow excess oil from the cylinder.
4. Inspect the spark plug and replace it if it is dirty, worn, or cracked; refer to the engine owner's manual.
5. Install the spark plug and tighten it to the recommended torque of 20 N·m (15 ft-lb).
6. Perform any needed maintenance procedures; refer to Maintenance (page 18).
7. Check the engine-oil level; refer to Checking the Engine-Oil Level (page 10).
8. Fill the fuel in the fuel tank with fresh fuel; refer to Filling the Fuel Tank (page 9).
9. **Electric-start model only:** Charge the battery; refer to Charging the Battery (page 20).
10. Connect the wire to the spark plug.

Notes:

Notes:

Notes:

European Privacy Notice

The Information Toro Collects
Toro Warranty Company (Toro) respects your privacy. In order to process your warranty claim and contact you in the event of a product recall, we ask you to share certain personal information with us, either directly or through your local Toro company or dealer.

The Toro warranty system is hosted on servers located within the United States where privacy law may not provide the same protection as applies in your country.

BY SHARING YOUR PERSONAL INFORMATION WITH US, YOU ARE CONSENTING TO THE PROCESSING OF YOUR PERSONAL INFORMATION AS DESCRIBED IN THIS PRIVACY NOTICE.

The Way Toro Uses Information
Toro may use your personal information to process warranty claims, to contact you in the event of a product recall and for any other purpose which we tell you about. Toro may share your information with Toro's affiliates, dealers or other business partners in connection with any of these activities. We will not sell your personal information to any other company. We reserve the right to disclose personal information in order to comply with applicable laws and with requests by the appropriate authorities, to operate our systems properly or for our own protection or that of other users.

Retention of your Personal Information
We will keep your personal information as long as we need it for the purposes for which it was originally collected or for other legitimate purposes (such as regulatory compliance), or as required by applicable law.

Toro's Commitment to Security of Your Personal Information
We take reasonable precautions in order to protect the security of your personal information. We also take steps to maintain the accuracy and current status of personal information.

Access and Correction of your Personal Information
If you would like to review or correct your personal information, please contact us by email at legal@toro.com.

Australian Consumer Law

Australian customers will find details relating to the Australian Consumer Law either inside the box or at your local Toro Dealer.

The Toro Warranty and The Toro GTS Starting Guarantee

Conditions and Products Covered

The Toro Company and its affiliate, Toro Warranty Company, pursuant to an agreement between them, jointly promise to repair the Toro Product listed below if defective in materials or workmanship or if the Toro GTS (Guaranteed to Start) engine will not start on the first or second pull, provided the routine maintenance required in the *Operator's Manual* have been performed.

The following time periods apply from the original date of purchase:

Products	Warranty Period
Walk Power Mowers	
• Cast Deck	5 years Residential Use[2] 90 Days Commercial Use
—Engine	5 years GTS Guarantee, Residential Use[3]
—Battery	2 years
• Steel Deck	2 years Residential Use[2] 30 Days Commercial Use
—Engine	2 years GTS Guarantee, Residential Use[3]
TimeMaster Mowers	3 years Residential Use[2] 90 Days Commercial Use
• Engine	3 years GTS Guarantee, Residential Use[3]
• Battery	2 years
Electric Hand Held Products and Electric Walk Power Mowers	2 years Residential Use[2] No Warranty for Commercial Use
All Ride-On Units Below	
• Engine	See engine manufacturer's warranty[4]
• Battery	2 years Residential Use[2]
• Attachments	2 years Residential Use[2]
DH Lawn & Garden Tractors	2 years Residential Use[2] 30 Days Commercial Use
TimeCutter	3 years Residential Use[2] 30 Days Commercial Use
• Engine	3 years Residential Use[2] 2 years or 300 hours Commercial Use [5]
TimeCutter HD	3 years or 300 hours [5]
• Engine	3 years or 300 hours Commercial Use [5]

[1]Original Purchaser means the person who originally purchased the Toro Product.

[2]Residential use means use of the product on the same lot as your home. Use at more than one location is considered commercial use and the commercial use warranty would apply.

[3]The Toro GTS Starting Guarantee does not apply when the product is used commercially.

[4]Some engines used on Toro Products are warranted by the engine manufacturer.

[5]Whichever occurs first.

Warranty may be denied if the hour meter is disconnected, altered, or shows signs of being tampered with.

Owner Responsibilities

You must maintain your Toro Product by following the maintenance procedures described in the *Operator's Manual*. Such routine maintenance, whether performed by a dealer or by you, is at your expense.

Instructions for Obtaining Warranty Service

If you think that your Toro Product contains a defect in materials or workmanship, follow this procedure:

1. Contact your seller to arrange service of the product. If for any reason it is impossible for you to contact your seller, you may contact any Toro Authorized Distributor to arrange service. Visit http://www.toro.com/en-us/locator/pages/default.aspx to locate a Toro distributor in your area.
2. Bring the product and your proof of purchase (sales receipt) to the servicing outlet. If for any reason you are dissatisfied with the servicing outlet's analysis or with the assistance provided, contact us at:

   Toro Warranty Company
   Toro Customer Care Department, RLC Division
   8111 Lyndale Avenue South
   Bloomington, MN 55420-1196
   001–952–948–4707

Items and Conditions Not Covered

There is no other express warranty except for special emission system coverage and engine warranty coverage on some products. This express warranty does not cover the following:

- Cost of regular maintenance service or parts, such as filters, fuel, lubricants, oil changes, spark plugs, air filters, blade sharpening or worn blades, cable/linkage adjustments, or brake and clutch adjustments
- Components failing due to normal wear
- Any product or part which has been altered, misused, neglected, requires replacement, or repair due to accidents or lack of proper maintenance
- Pickup and delivery charges
- Repairs or attempted repairs by anyone other than an Authorized Toro Service Dealer
- Repairs necessary due to failure to follow recommended fuel procedure (consult *Operator's Manual* for more details)
  - Removing contaminants from the fuel system is not covered
  - Use of old fuel (more than one month old) or fuel which contains more than 10% ethanol or more that 15% MTBE
  - Failure to drain the fuel system prior to any period of non-use over one month
- Repairs or adjustments to correct starting difficulties due to the following:
  - Failure to follow proper maintenance procedures or recommended fuel procedure
  - Rotary mower blade striking an object
- Special operational conditions where starting may require more than two pulls:
  - First time starts after extended period of non-use over three months or seasonal storage
  - Cool temperature starts such as those found in early spring and late autumn
  - Improper starting procedures - if you are having difficulty starting your unit, please check the *Operator's Manual* to ensure that you are using the correct starting procedures. This can save an unnecessary visit to an Authorized Toro Service Dealer.

General Conditions

The purchaser is covered by the national laws of each country. The rights to which the purchaser is entitled with the support of these laws are not restricted by this warranty.