Form No. 3409-162 Rev B

53cm Super Recycler® Lawn Mower

Model No. 20792—Serial No. 400000000 and Up

Model No. 20797—Serial No. 400000000 and Up

Operator's Manual

Introduction

This rotary-blade, walk-behind lawn mower is intended to be used by residential homeowners. It is designed primarily for cutting grass on well-maintained lawns on residential properties. It is not designed for cutting brush or for agricultural uses.

Read this information carefully to learn how to operate and maintain your product properly and to avoid injury and product damage. You are responsible for operating the product properly and safely.

You may contact Toro directly at www.Toro.com for product and accessory information, help finding a dealer, or to register your product.

Whenever you need service, genuine Toro parts, or additional information, contact an Authorized Service Dealer or Toro Customer Service and have the model and serial numbers of your machine ready. Figure 1 identifies the location of the model and serial numbers on the product. Write the numbers in the space provided.

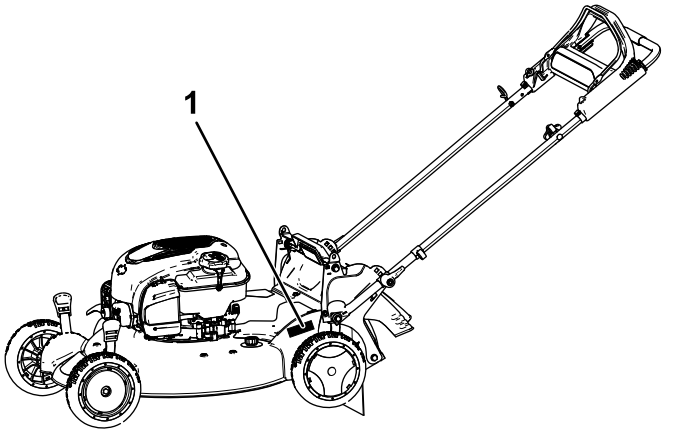

g187499

Figure 1

1. Model and serial number location

Model No. _____

Serial No. _____

This manual identifies potential hazards and has safety messages identified by the safety-alert symbol (Figure 2), which signals a hazard that may cause serious injury or death if you do not follow the recommended precautions.



g000502

Figure 2

Safety-alert symbol

This manual uses 2 words to highlight information. **Important** calls attention to special mechanical information and **Note** emphasizes general information worthy of special attention.

This product complies with all relevant European directives. For details, please see the separate product specific Declaration of Conformity (DOC) sheet.

Net Torque: The gross or net torque of this engine was laboratory rated by the engine manufacturer in accordance with the Society of Automotive Engineers (SAE) J1940. As configured to meet safety, emission, and operating requirements, the actual engine torque on this class of mower will be significantly lower. Go to www.Toro.com to view specifications on your mower model.

Contents

Introduction 1
Safety 2
General Safety 2
Safety and Instructional Decals 3
Setup 6
1 Assembling and Unfolding the Handle 6
2 Installing the Recoil-starter Rope in the Rope Guide 7
3 Filling the Engine with Oil 7
4 Charging the Battery 7
5 Assembling the Grass Bag 8
Product Overview 9
Specifications 9
Operation 9
Before Operation 9

© 2017—The Toro® Company
8111 Lyndale Avenue South
Bloomington, MN 55420

Register at www.Toro.com.

CE

Original Instructions (EN)
Printed in Mexico
All Rights Reserved

3409-162 B

Before Operation Safety 9
Filling the Fuel Tank 10
Checking the Engine-Oil Level 10
Adjusting the Handle Height 11
Adjusting the Cutting Height 11
During Operation 11
During Operation Safety 11
Starting the Engine 12
Using the Self-Propel Drive 13
Shutting Off the Engine 14
Recycling the Clippings 14
Bagging the Clippings 15
Discharging the Clippings 16
Operating Tips 17
After Operation 18
After Operation Safety 18
Cleaning under the Machine 18
Folding the Handle 19
Maintenance 20
Recommended Maintenance Schedule(s) 20
Maintenance Safety 20
Preparing for Maintenance 20
Servicing the Air Filter 21
Changing the Engine Oil 21
Charging the Battery 22
Replacing the Fuse 23
Replacing the Blade 23
Adjusting the Self-Propel Drive 24
Lubricating the Wheel Gears 25
Storage 25
Preparing the Machine for Storage 25
Removing the Machine from Storage 25

Safety

This machine has been designed in accordance with EN ISO 5395:2013.

General Safety

This product is capable of amputating hands and feet and of throwing objects. Always follow all safety instructions to avoid serious personal injury.

Using this product for purposes other than its intended use could prove dangerous to you and bystanders.

- Read and understand the contents of this *Operator's Manual* before starting the engine.
- Do not put your hands or feet near moving components of the machine.
- Do not operate the machine without all guards and other safety protective devices in place and working on the machine.
- Keep clear of any discharge opening. Keep bystanders a safe distance away from the machine.
- Keep children out of the operating area. Never allow children to operate the machine.
- Stop the machine and shut off the engine before servicing, fueling, or unclogging the machine.

Improperly using or maintaining this machine can result in injury. To reduce the potential for injury, comply with these safety instructions and always pay attention to the safety-alert symbol, which means Caution, Warning, or Danger—personal safety instruction. Failure to comply with these instructions may result in personal injury or death.

You can find additional safety information where needed throughout this manual.

Safety and Instructional Decals

Safety decals and instructions are easily visible to the operator and are located near any area of potential danger. Replace any decal that is damaged or missing.

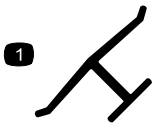

decaloemmarkt

Manufacturer's Mark

1. This mark indicates that the blade is identified as a part from the original machine manufacturer.

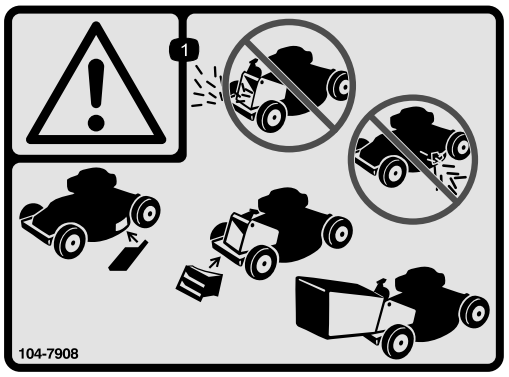

decal104-7908

104-7908

1. Warning—do not operate the machine without the rear-discharge plug or bag in place; do not operate the machine without the side-discharge cover or deflector in place.

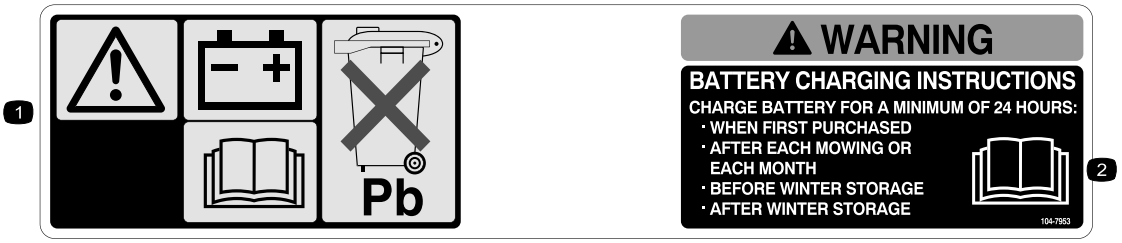

decal104-7953

104-7953

Electric-Start Model Only

1. Warning—read the *Operator's Manual* for information on charging the battery; contains lead; do not discard.
2. Read the *Operator's Manual.*

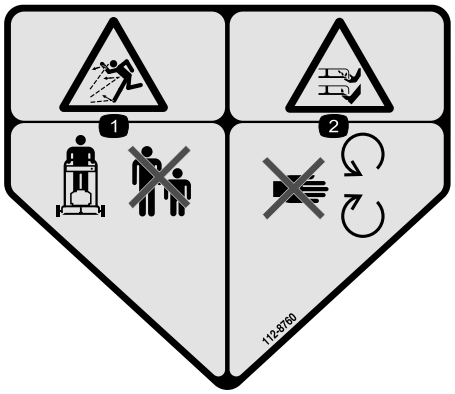

decal112-8760

112-8760

1. Thrown object hazard—keep bystanders a safe distance away from the machine.
2. Cutting/dismemberment of hand or foot—stay away from moving parts.



decal112-8867

112-8867

1. Lock
2. Unlock

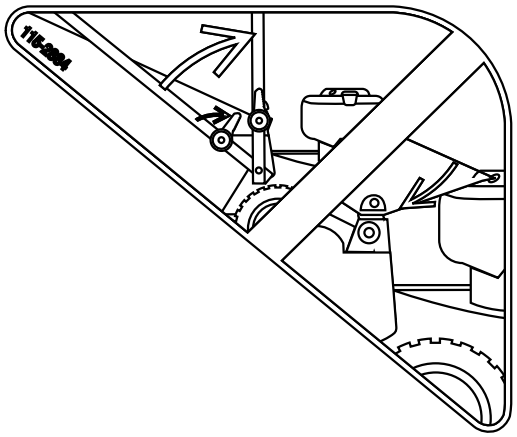

decal115-2884

115-2884

Handle Position Adjustment



decal115-8411

115-8411

1. Unlocked
2. Locked

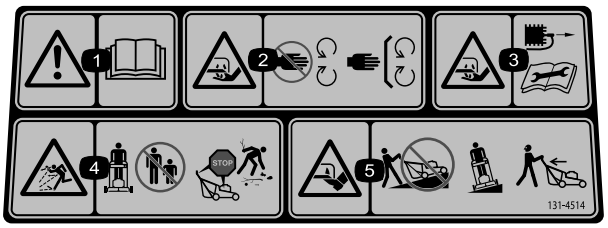

decal131-4514b

131-4514

1. Warning—read the *Operator's Manual*.
2. Cutting/dismemberment hazard of hand or foot, mower blade—stay away from moving parts; keep all guards and shields in place.
3. Cutting/dismemberment hazard of hand or foot, mower blade—disconnect the spark-plug wire and read the instructions before servicing or performing maintenance.
4. Thrown object hazard—keep bystanders a safe distance away from the machine; shut off the engine before leaving the operating position; pick up any debris before mowing.
5. Cutting/dismemberment hazard of hand or foot, mower blade—do not operate up and down slopes; operate side to side on slopes; look behind you when backing up.

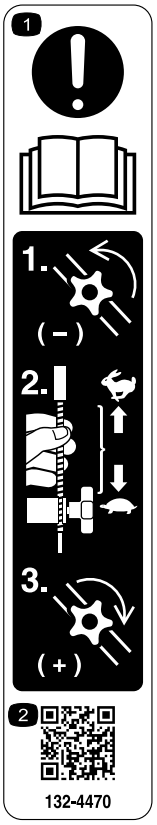

decal132-4470

132-4470

Traction Adjustment

1. Attention; read the *Operator's Manual*—1) Loosen the knob by turning it counterclockwise; 2) Pull the cable(s) away from the engine to decrease the traction, or push the cable(s) toward the engine to increase the traction; 3) Tighten the knob by turning it clockwise.
2. Scan the QR code for more information on traction adjustment.

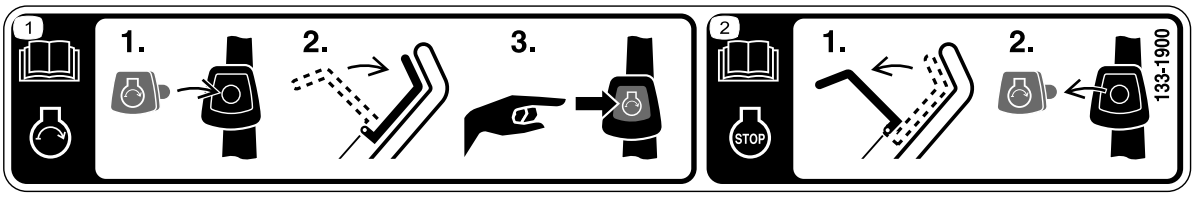

decal133-1900

133-1900

Electric-Start Model Only

1. Read the *Operator's Manual* for more information on starting the engine—1) Insert the electric-start button into the ignition; 2) Engage the blade-control bar; 3) Push the electric-start button to start the engine.
2. Read the *Operator's Manual* for more information on stopping the engine—1) Release the blade-control bar; 2) Remove the electric-start button from the ignition.

Setup

Important: **Remove and discard the protective plastic sheet that covers the engine and any other plastic or wrapping on the machine.**

Important: **To prevent accidental starting, do not insert the electric-start button into the electric-start ignition until you are ready to start the engine (electric-start model only).**

1

Assembling and Unfolding the Handle

No Parts Required

Procedure

⚠ WARNING

Assembling and unfolding the handle improperly can damage the cables, causing an unsafe operating condition.

- **Do not damage the cables when assembling and unfolding the handle.**
- **Ensure that the cables are routed to the outside of the handle.**
- **If a cable is damaged, contact an Authorized Service Dealer.**

1. Raise the rear of the machine housing to its highest cutting-height setting by moving the 2 rear cutting-height levers all the way forward. Refer to Adjusting the Cutting Height (page 11).
2. Attach the handle ends to the machine housing with 2 washers and 2 handle bolts (Figure 3), **but do not tighten the handle bolts.**

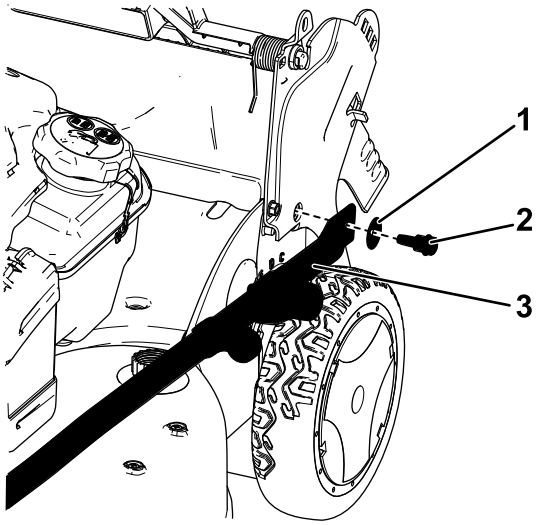

g187513

Figure 3

1. Washer
2. Handle bolt
3. Handle end

Important: **Route the cables to the *outside* of the handle.**

3. Rotate the handle rearward (Figure 4).

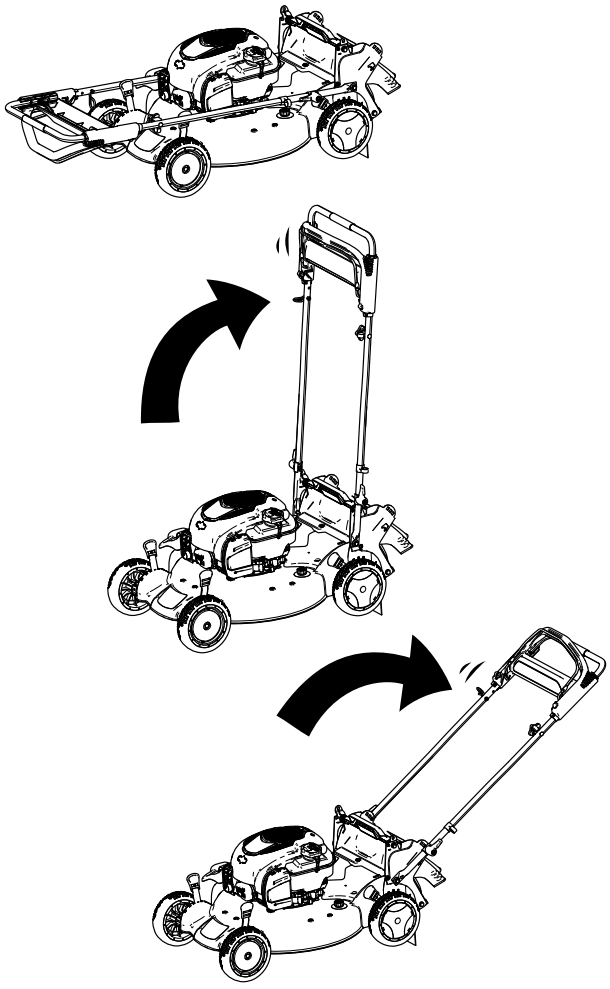

g187600

Figure 4

4. Lock the handle at your desired height. Refer to Adjusting the Handle Height (page 11).
5. Torque the handle bolts to 14 to 17 N·m (120 to 160 in-lb).
6. Adjust the cutting height. Refer to Adjusting the Cutting Height (page 11).

2

Installing the Recoil-starter Rope in the Rope Guide

No Parts Required

Procedure

Important: **To start the engine safely and easily whenever you use the machine, install the recoil-starter rope in the rope guide.**

Hold the blade-control bar to the upper handle and pull the recoil-starter rope through the rope guide on the handle (Figure 5).

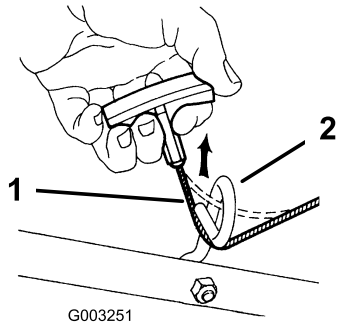

g003251

Figure 5

1. Recoil-starter rope
2. Rope guide

3

Filling the Engine with Oil

No Parts Required

Procedure

Important: **Your machine does not come with oil in the engine. Before starting the engine, fill the engine with oil.**

Engine Oil Specifications

Engine Oil Specifications (cont'd.)

Engine oil capacity	0.44 L (15 fl oz)
Oil viscosity	SAE 30 or SAE 10W-30 detergent oil
API service classification	SJ or higher

1. Move the machine to a level surface.
2. Remove the dipstick by rotating the cap counterclockwise and pulling it out (Figure 6).

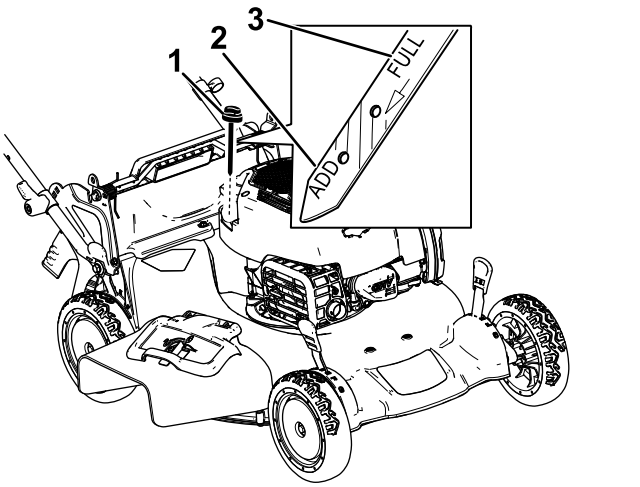

g187518

Figure 6

1. Dipstick
2. Add
3. Full

3. Carefully pour about 3/4 of the engine capacity of oil into the oil-fill tube.
4. Wait 3 minutes for the oil to settle in the engine.
5. Wipe the dipstick clean with a clean cloth.
6. Insert the dipstick into the oil-fill tube, then remove the dipstick.
7. Read the oil level on the dipstick (Figure 6).
   - If the oil level on the dipstick is too low, carefully pour a small amount of oil into the oil-fill tube, wait 3 minutes, and repeat steps 5 through 7 until the oil on the dipstick is at the correct level.
   - If the oil level on the dipstick is too high, drain the excess oil until the oil on the dipstick is at the correct level; refer to Changing the Engine Oil (page 21).

   Important: **If the oil level in the engine is too low or too high and you run the engine, you may damage the engine.**
8. Install the dipstick into the oil-fill tube securely.

4

Charging the Battery

No Parts Required

Procedure

Electric-Start Model Only

Refer to Charging the Battery (page 22).

5

Assembling the Grass Bag

No Parts Required

Procedure

1. Slip the grass bag over the frame as shown in Figure 7.

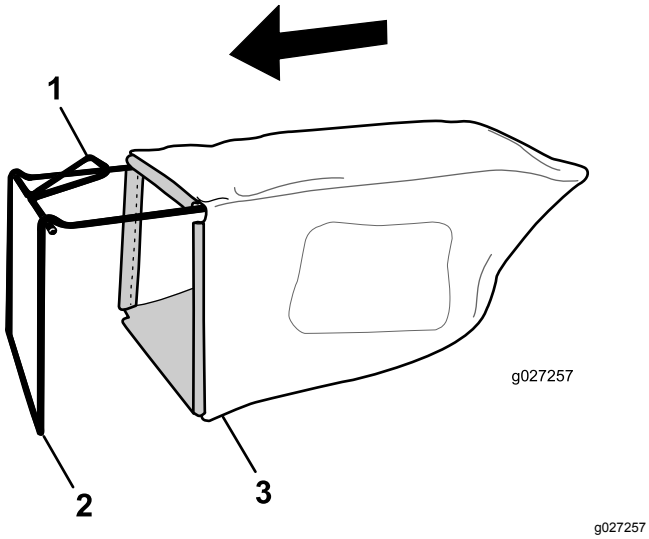

g027257

Figure 7

1. Handle
2. Frame
3. Grass bag

Note: Do not slip the bag over the handle (Figure 7).

2. Hook the bottom channel of the bag onto the bottom of the frame (Figure 8).

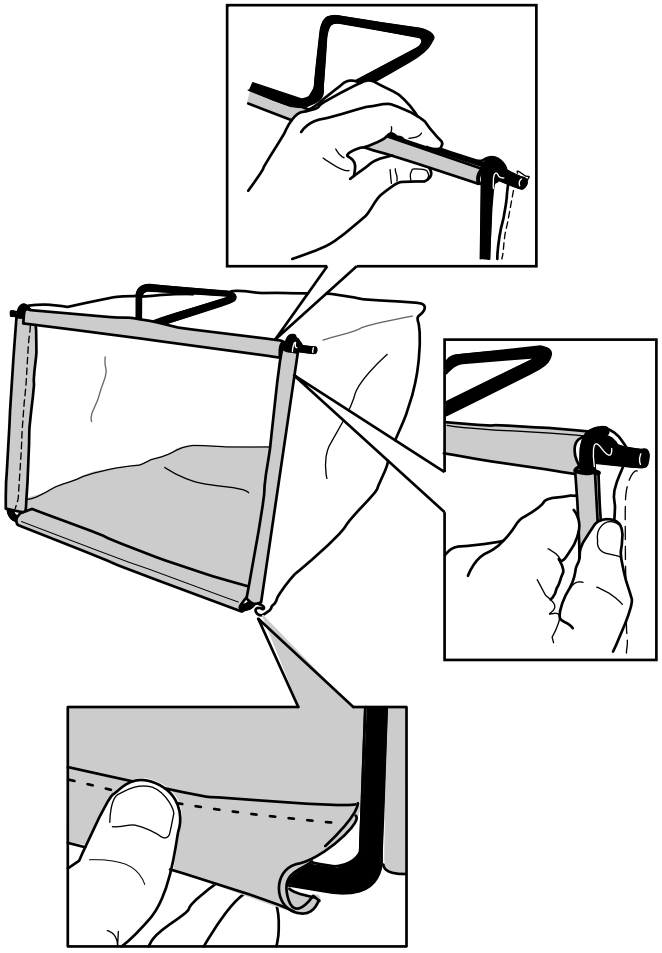

g027258

Figure 8

3. Hook the top and side channels of the bag onto the top and sides of the frame, respectively (Figure 8).

Product Overview

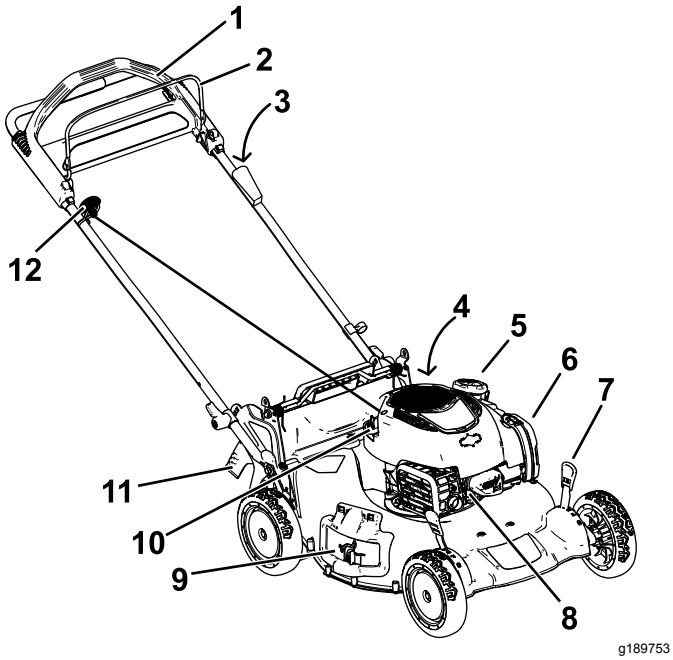

Figure 9

1. Handle
2. Blade-control bar
3. Electric-start button (electric-start model only)
4. Washout port (not shown)
5. Fuel-tank cap
6. Air filter
7. Cutting-height lever (4)
8. Spark plug
9. Side-discharge door
10. Oil fill/dipstick
11. Rear door
12. Recoil-start handle

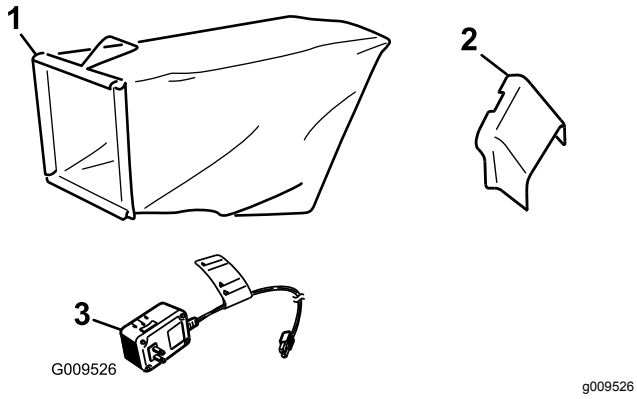

Figure 10

1. Grass bag
2. Side-discharge chute
3. Battery charger (electric-start model only)

Specifications

Model	Weight	Length	Width	Height
20792	36 kg (79 lb)	165 cm (65 inches)	56 cm (22 inches)	104 cm (41 inches)
20797	38 kg (83 lb)	165 cm (65 inches)	56 cm (22 inches)	104 cm (41 inches)

Operation

Note: Determine the left and right sides of the machine from the normal operating position.

Before Operation

Before Operation Safety

General Safety

- Become familiar with the safe operation of the equipment, operator controls, and safety signs.
- Check that all guards and safety devices, such as deflectors and/or grass catcher, are in place and working properly.
- Always inspect the machine to ensure that the blades, blade bolts, and cutting assembly are not worn or damaged.
- Inspect the area where you will use the machine and remove all objects that the machine could throw.
- Adjusting the cutting height may bring you into contact with the moving blade, causing serious injury.
  - Shut off the engine, remove the electric-start button (electric-start model only), and wait for all moving parts to stop.
  - Do not put your fingers under the housing when adjusting the cutting height.

Fuel Safety

⚠ DANGER

Fuel is extremely flammable and highly explosive. A fire or explosion from fuel can burn you and others and can damage property.

- **To prevent a static charge from igniting the fuel, place the container and/or machine directly on the ground before filling, not in a vehicle or on an object.**
- **Fill the fuel tank outdoors, in an open area, when the engine is cold. Wipe up any fuel that spills.**
- **Do not handle fuel when smoking or around an open flame or sparks.**
- **Store fuel in an approved container and keep it out of the reach of children.**

⚠ WARNING

Fuel is harmful or fatal if swallowed. Long-term exposure to vapors can cause serious injury and illness.

- **Avoid prolonged breathing of vapors.**
- **Keep your hands and face away from the nozzle and the fuel-tank opening.**
- **Keep fuel away from your eyes and skin.**

Filling the Fuel Tank

- For best results, use only clean, fresh, unleaded gasoline with an octane rating of 87 or higher ((R+M)/2 rating method).
- Oxygenated fuel with up to 10% ethanol or 15% MTBE by volume is acceptable.
- **Do not** use ethanol blends of gasoline, such as E15 or E85, with more than 10% ethanol by volume. Performance problems and/or engine damage may result, which may not be covered under warranty.
- **Do not** use gasoline containing methanol.
- **Do not** store fuel either in the fuel tank or in fuel containers over the winter unless fuel stabilizer has been added to the fuel.
- **Do not** add oil to gasoline.

Fill the fuel tank with fresh unleaded regular gasoline from a major name-brand service station (Figure 11).

Important: **To reduce starting problems, add fuel stabilizer to the gasoline all season. Mix the stabilizer with gasoline less than 30 days old.**

Refer to your engine owner's manual for additional information.

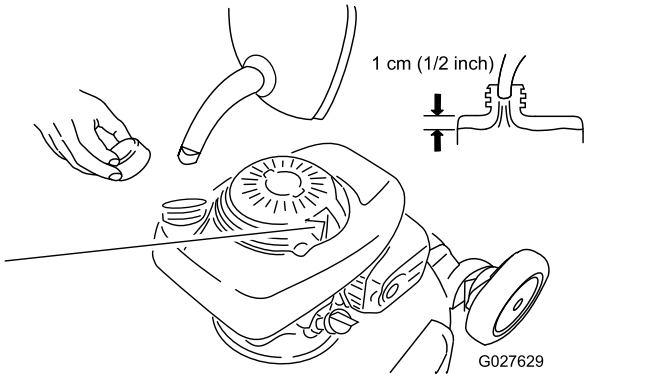

g027629

Figure 11

Checking the Engine-Oil Level

1. Move the machine to a level surface.
2. Remove the dipstick by rotating the cap counterclockwise and pulling it out (Figure 6).

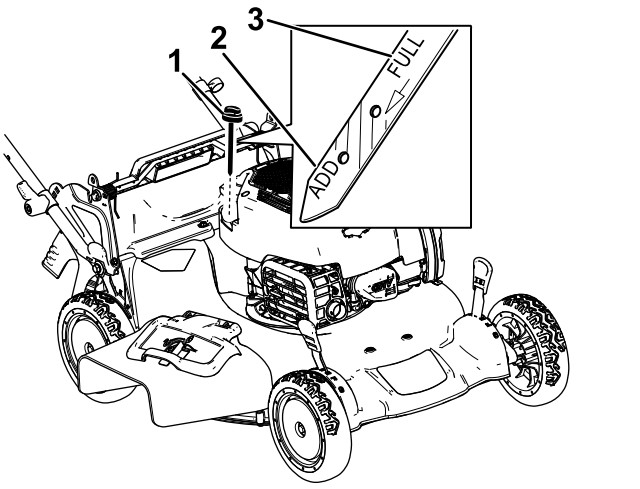

g187518

Figure 12

1. Dipstick
2. Add
3. Full

3. Wipe the dipstick clean with a clean cloth.
4. Insert the dipstick into the oil-fill tube, then remove the dipstick.
5. Read the oil level on the dipstick (Figure 12).
   - If the oil level on the dipstick is too low (Figure 12), carefully pour a small amount of SAE 30 or SAE 10W-30 detergent oil into the oil-fill tube, wait 3 minutes, and repeat steps 3 through 5 until the oil on the dipstick

is at the correct level. For the oil type, refer to Changing the Engine Oil (page 21).

- If the oil level on the dipstick is too high (Figure 12), drain the excess oil until the oil on the dipstick is at the correct level; refer to Changing the Engine Oil (page 21).

Important: **If the oil level in the engine is too low or too high and you run the engine, you may damage the engine.**

6. Install the dipstick into the oil-fill tube securely.

Adjusting the Handle Height

You may raise or lower the handle to a position comfortable for you.

Rotate the handle lock, move the handle to 1 of 3 positions, and lock the handle into position (Figure 13).

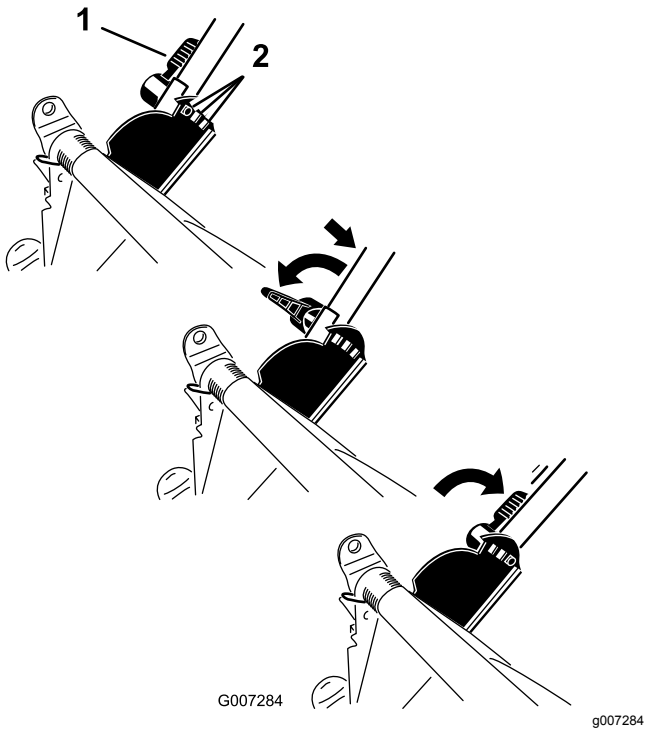

Figure 13

1. Handle lock
2. Handle positions

Adjusting the Cutting Height

⚠ WARNING

Adjusting the cutting height may bring you into contact with the moving blade, causing serious injury.

- **Shut off the engine and wait for all moving parts to stop.**
- **Do not put your fingers under the housing when adjusting the cutting height.**

⚠ CAUTION

If the engine has been running, the muffler will be hot and can severely burn you.

Keep away from the hot muffler.

Adjust the cutting height as desired. Set all 4 wheels to the same height. To raise and lower the machine, refer to Figure 14.

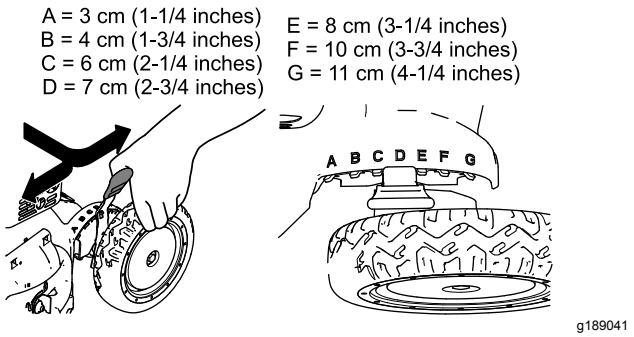

Figure 14

During Operation

During Operation Safety

General Safety

- Wear appropriate clothing, including eye protection; slip-resistant, substantial footwear; and hearing protection. Tie back long hair, secure loose clothing, and do not wear jewelry.
- Do not operate the machine while ill, tired, or under the influence of alcohol or drugs.
- The blade is sharp; contacting the blade can result in serious personal injury. Shut off the engine, remove the electric-start button (electric-start model only), and wait for all moving parts to stop before leaving the operating position.

- When you release the blade-control bar, the engine should shut off and the blade should stop within 3 seconds. If not, stop using your machine immediately and contact an Authorized Service Dealer.
- Always look down and behind you before moving the machine in reverse.
- Operate the machine only in good visibility and appropriate weather conditions. Do not operate the machine when there is the risk of lighting.
- Wet grass or leaves can cause serious injury if you slip and contact the blade. Mow only in dry conditions.
- Use extreme care when approaching blind corners, shrubs, trees, or other objects that may block your view.
- Watch for holes, ruts, bumps, rocks, or other hidden objects. Uneven terrain could cause a slip-and-fall accident.
- Stop the machine and inspect the blades after striking an object or if there is an abnormal vibration in the machine. Make all necessary repairs before resuming operation.
- Before leaving the operating position, shut off the engine, remove the electric-start button (electric-start model only), and wait for all moving parts to stop.
- If the engine has been running the muffler will be hot and can severely burn you. Keep away from the hot muffler.
- Check the grass catcher components and the discharge guard frequently and replace them with the manufacturer's recommended parts when necessary.
- Use accessories and attachments approved by The Toro® Company only.

Slope Safety

- Mow across the face of slopes; never up and down. Use extreme caution when changing direction on slopes.
- Do not mow on excessively steep slopes. Poor footing could cause a slip-and-fall accident.
- Mow with caution near drop-offs, ditches, or embankments.

Starting the Engine

You can start the engine using either the electric-start button (if equipped) or the recoil-start handle.

Starting the Engine Using the Electric-Start Button

For Electric-Start Models

1. Hold the blade-control bar against the handle (Figure 15).

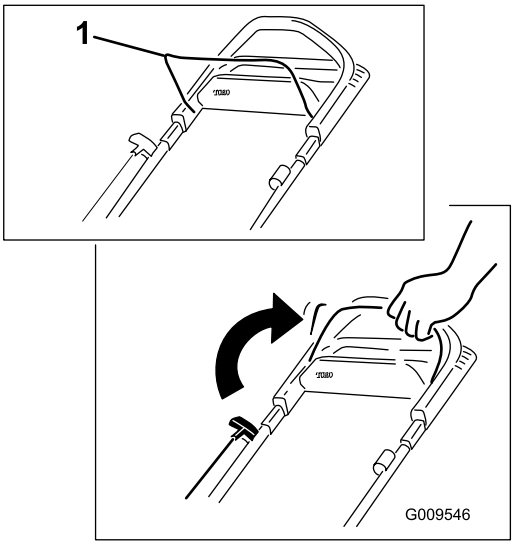

g009546

Figure 15

1. Blade-control bar

2. Push the electric-start button until the engine starts (Figure 16).

   Note: If the electric-start button has been removed, insert it in the electric starter; refer to Figure 16.

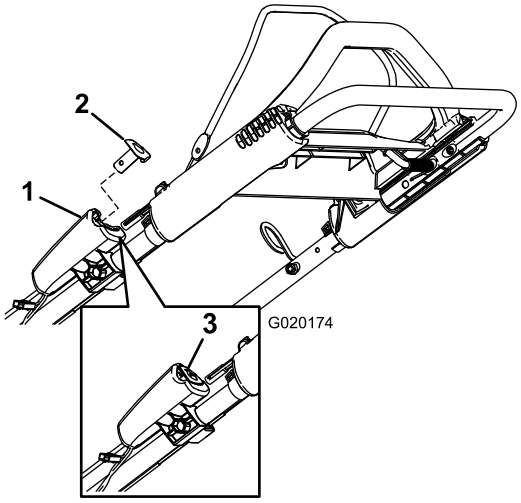

g020174

Figure 16

1. Electric starter
2. Electric-start button
3. Electric-start button (installed)

Note: If the machine does not start after several attempts, contact an Authorized Service Dealer.

Starting the Engine Using the Recoil-Start Handle

1. Hold the blade-control bar against the handle (Figure 17).

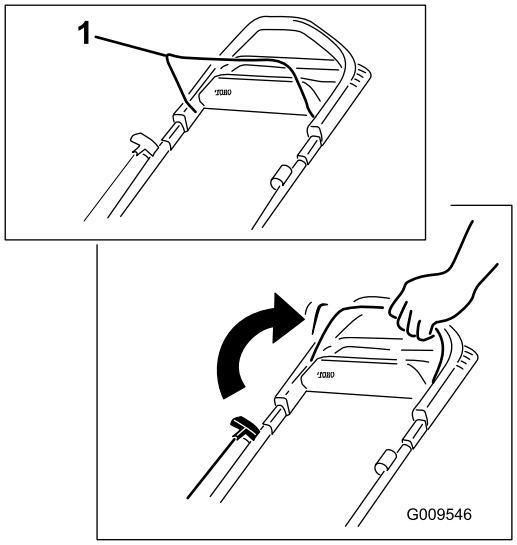

g009546

Figure 17

1. Blade-control bar

2. Pull the recoil-start handle (Figure 18).

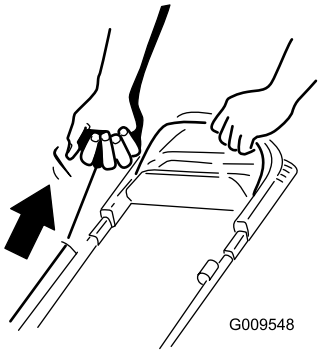

g009548

Figure 18

Note: When you pull the recoil-start handle, pull it lightly until you feel resistance, then pull it sharply (Figure 18). Allow the rope to return to the handle slowly.

Note: If the machine does not start after several attempts, contact an Authorized Service Dealer.

Using the Self-Propel Drive

To operate the self-propel drive, simply walk with your hands on the upper handle and your elbows at your sides, and the machine will automatically keep pace with you (Figure 19).

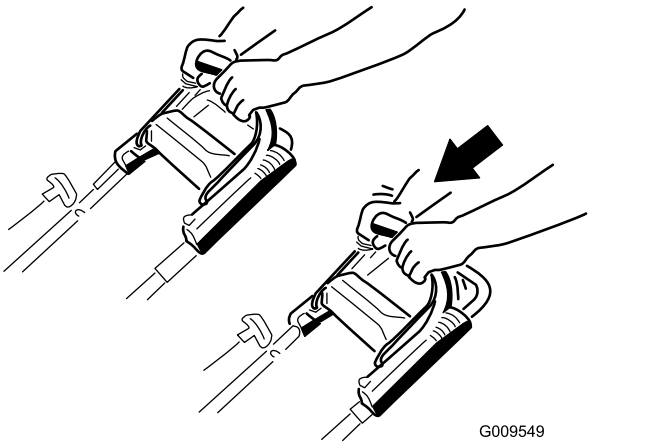

g009549

Figure 19

Note: If the machine does not freely roll backward after self-propelling, stop walking, hold your hands in place, and allow the machine to roll a couple of centimeters (inches) forward to disengage the wheel drive. You can also try reaching just under the upper handle to the metal handle and pushing the machine forward a couple of centimeters (inches). If the machine still does not roll backward easily, contact an Authorized Service Dealer.

Shutting Off the Engine

Service Interval: Before each use or daily

To shut off the engine, release the blade-control bar.

Note: Remove the electric-start button (if equipped) whenever you leave the machine.

Important: **When you release the blade-control bar, the engine should shut off and the blade should stop within 3 seconds. If they do not, stop using your machine immediately and contact an Authorized Service Dealer.**

Recycling the Clippings

Your machine comes from the factory ready to recycle the grass and leaf clippings back into the lawn.

If the side-discharge chute is on the machine, remove it and lock the side-discharge door; refer to Removing the Side-Discharge Chute (page 17) before recycling the clippings.

Important: **Ensure that the rear plug is locked in place. To lock the plug, raise the rear door (Figure 20), firmly push the plug in until it snaps into place behind the tabs, and rotate the lever on the plug to the left (Figure 21).**

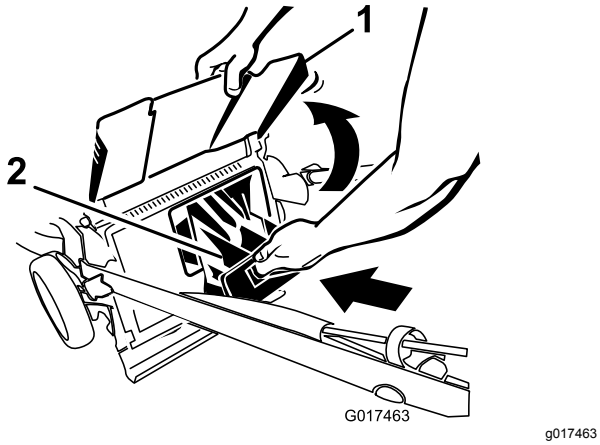

g017463

Figure 20

1. Rear door
2. Rear plug

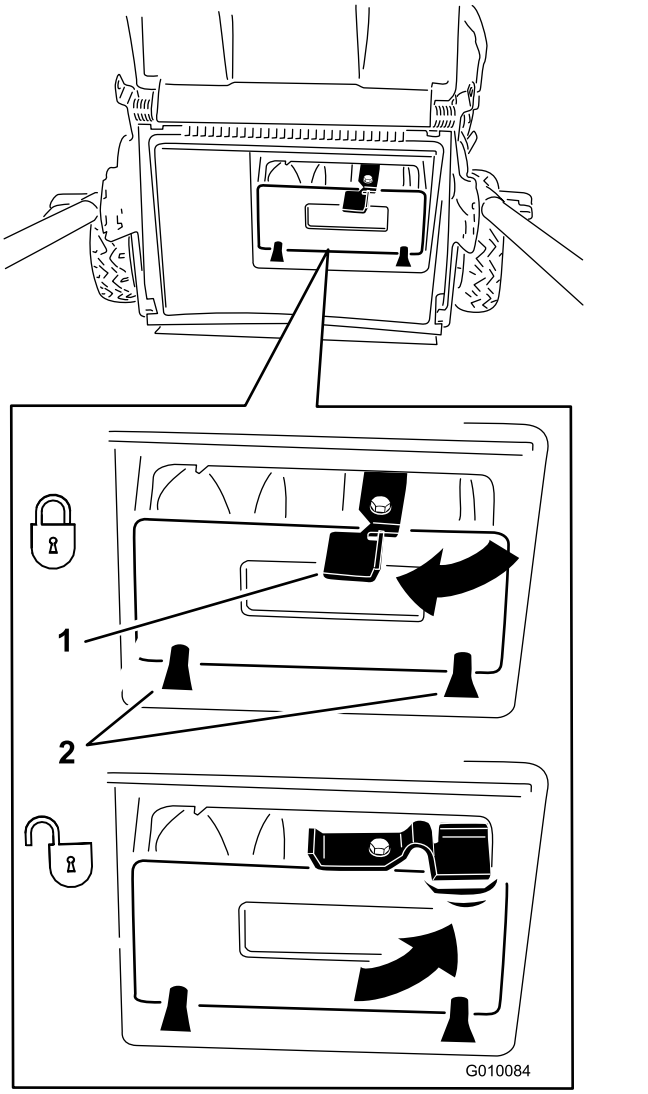

g010084

Figure 21

1. Lever
2. Tabs

Note: To unlock the rear plug, rotate the lever on the plug to the right (Figure 21).

Bagging the Clippings

Use the grass bag when you want to collect grass and leaf clippings from the lawn.

If the side-discharge chute is on the machine, remove it and lock the side-discharge door; refer to Removing the Side-Discharge Chute (page 17).

Installing the Grass Bag

1. Route the starter rope around the lower-rope guide (Figure 22).

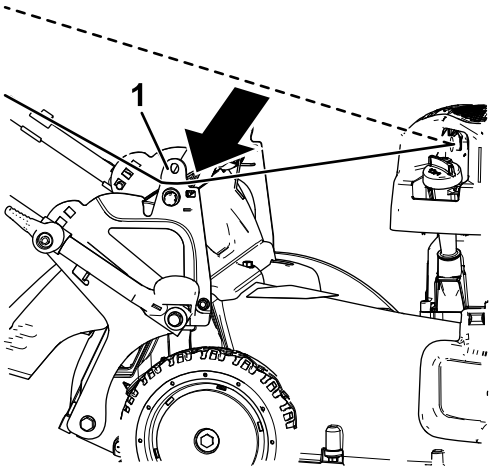

g187599

Figure 22

1. Lower-rope guide

Note: The lower-rope guide releases the starter rope when you pull the recoil-start handle.

2. Raise and hold up the rear door (Figure 23).

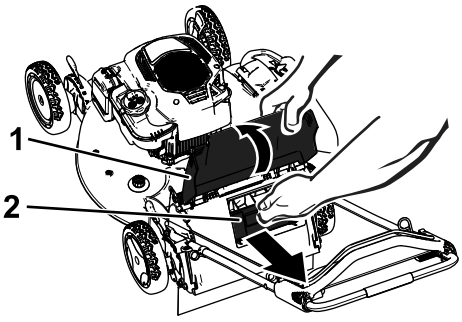

g187598

Figure 23

1. Rear door
2. Rear plug

3. Pull out the rear plug (Figure 23).
4. Hang the upper front edge of the bag from the grass-bag pins on the notches of the handle brackets (Figure 24).

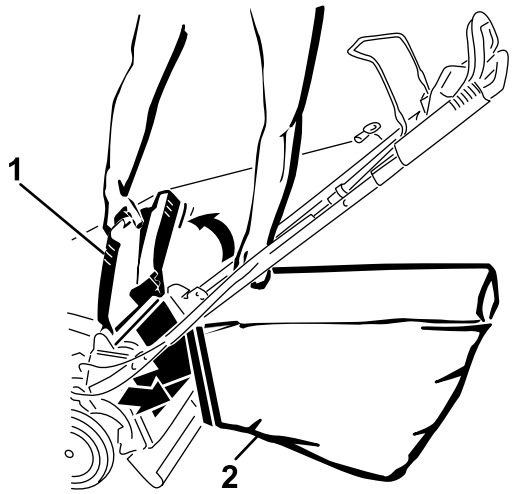

g189818

Figure 24

1. Rear door
2. Grass bag

5. Lower the rear door.

Removing the Grass Bag

1. Route the starter rope around the lower-rope guide (Figure 25).

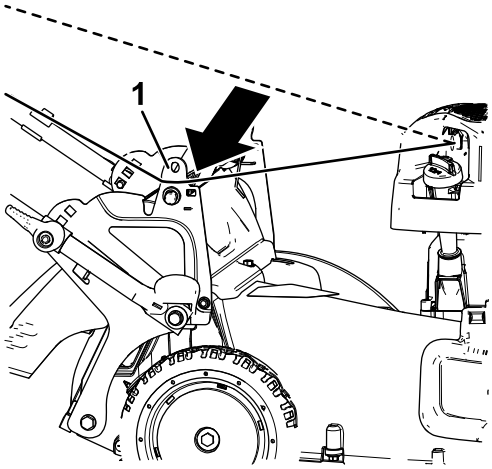

g187599

Figure 25

1. Lower-rope guide

Note: The lower-rope guide releases the starter rope when you pull the recoil-start handle.

2. Raise and hold up the rear door.
3. Lift the grass bag up by the handle off the notches of the handle brackets.
4. Install the rear plug (Figure 26).

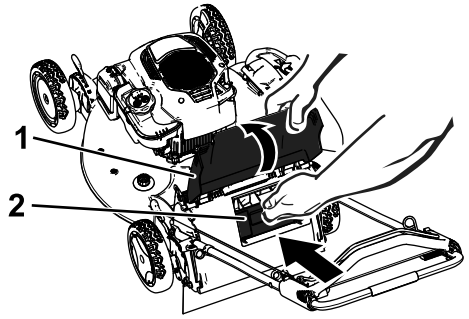

g187597

Figure 26

1. Rear door
2. Rear plug

Important: **Ensure that the rear plug is locked in place. To lock the plug, firmly push the plug in until it snaps into place behind the tabs, and rotate the lever on the plug to the left (Figure 27).**

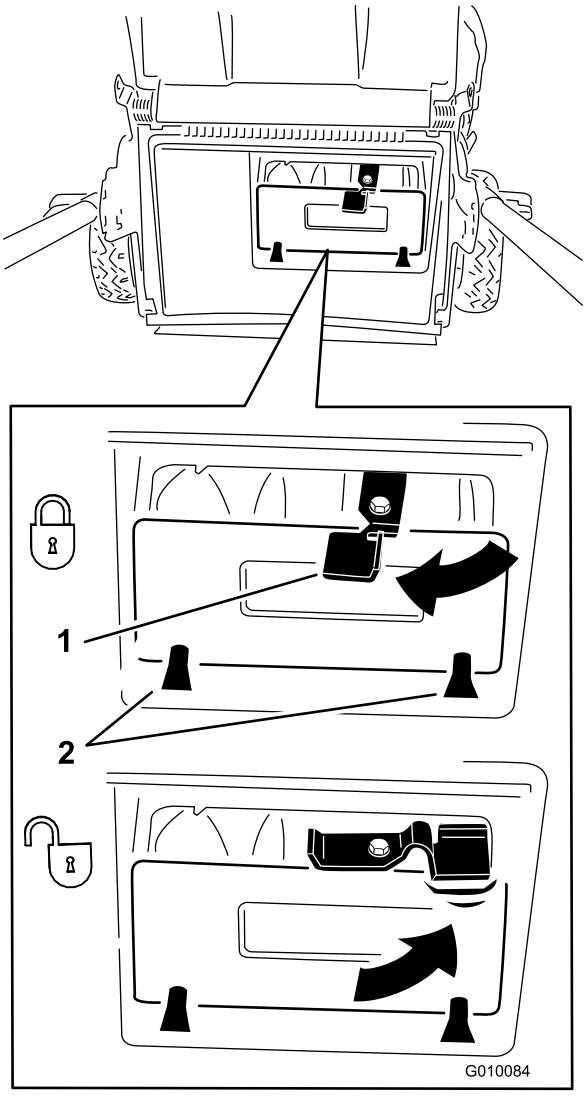

g010084

Figure 27

1. Lever
2. Tabs

Note: To unlock the plug, rotate the lever on the plug to the right (Figure 27).

5. Lower the rear door.

Discharging the Clippings

Side-discharge or rear-discharge the clippings when cutting very tall grass.

⚠ WARNING

The blade is sharp; contacting the blade can result in serious personal injury.

Shut off the engine and wait for all moving parts to stop before leaving the operating position.

Side-Discharging the Clippings

If the bag is on the machine, remove it and insert the rear plug; refer to Removing the Grass Bag (page 15).

Important: **Ensure that the rear plug is locked in place. To lock the plug, raise the rear door (Figure 28), firmly push the plug in until it snaps into place behind the tabs, and rotate the lever on the plug to the left (Figure 27).**

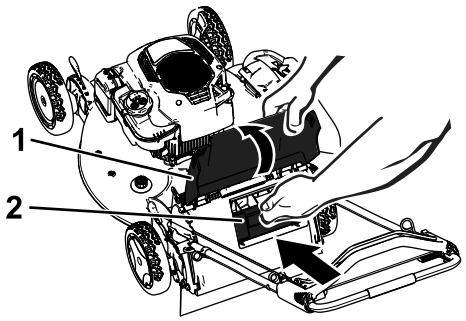

g187597

Figure 28

1. Rear door
2. Rear plug

Note: To unlock the plug, rotate the lever on the plug to the right (Figure 27).

Installing the Side-Discharge Chute

1. Unlock the side-discharge door (Figure 29).

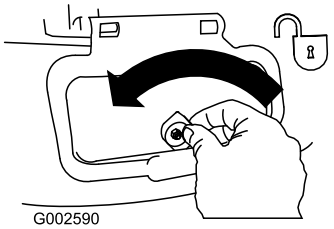

g002590

Figure 29

2. Lift open the side-discharge door (Figure 30).

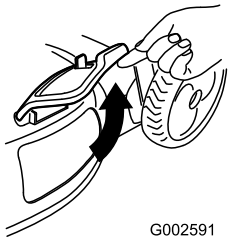

g002591

Figure 30

3. Install the side-discharge chute and close the door onto the chute (Figure 31).

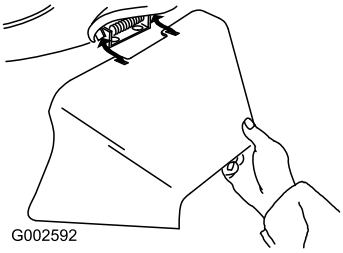

g002592

Figure 31

Removing the Side-Discharge Chute

To remove the side discharge chute, reverse the steps above.

Important: **Lock the side-discharge door after you close it (Figure 32).**

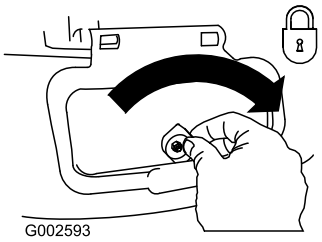

g002593

Figure 32

Rear-Discharging the Clippings

If the bag is on the machine, remove it; refer to Removing the Grass Bag (page 15).

If the side discharge chute is on the machine, remove it and lock the side-discharge door; refer to Removing the Side-Discharge Chute (page 17).

1. Raise and hold up the rear door (Figure 33).

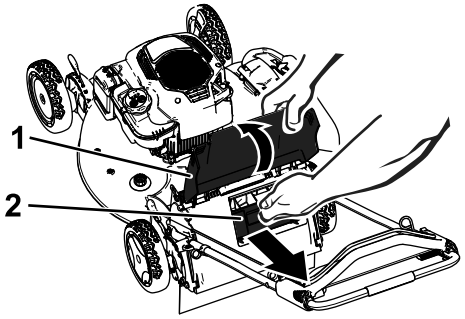

g187598

Figure 33

1. Rear door
2. Rear-discharge plug

2. Pull out the rear-discharge plug (Figure 33).

Operating Tips

General Mowing Tips

- Inspect the area where you will use the machine and remove all objects that the machine could throw.
- Avoid striking solid objects with the blade. Never deliberately mow over any object.
- If the machine strikes an object or starts to vibrate, immediately shut off the engine, disconnect the wire from the spark plug, remove the electric-start button (if equipped), and examine the machine for damage.
- For best performance, install a new blade before the cutting season begins.
- Replace the blade when necessary with a Toro replacement blade.

Cutting Grass

- Cut only about a third of the grass blade at a time. Do not cut below 51 mm (2 inches) unless the grass is sparse or it is late fall when grass growth begins to slow down.
- When cutting grass over 15 cm (6 inches) tall, mow at the highest cutting height setting and walk slower; then mow again at a lower setting for the best lawn appearance. If the grass is too long, the machine may plug and cause the engine to stall.
- Wet grass and leaves tend to clump on the yard and can cause the machine to plug or the engine to stall. Avoid mowing in wet conditions.
- Be aware of a potential fire hazard in very dry conditions, follow all local fire warnings, and keep the machine free of dry grass and leaf debris.

- Alternate the mowing direction. This helps disperse the clippings over the lawn for even fertilization.
- If the finished lawn appearance is unsatisfactory, try 1 or more of the following:
  - Replace the blade or have it sharpened.
  - Walk at a slower pace while mowing.
  - Raise the cutting height on your machine.
  - Cut the grass more frequently.
  - Overlap cutting swaths instead of cutting a full swath with each pass.

Cutting Leaves

- After cutting the lawn, ensure that half of the lawn shows through the cut leaf cover. You may need to make more than a single pass over the leaves.
- If there are more than 13 cm (5 inches) of leaves on the lawn, mow at a higher cutting height and then again at the desired cutting height.
- Slow down your mowing speed if the machine does not cut the leaves finely enough.

After Operation

After Operation Safety

General Safety

- Clean grass and debris from the machine to help prevent fires. Clean up oil or fuel spills.
- Allow the engine to cool before storing the machine in any enclosure.
- Never store the machine or fuel container where there is an open flame, spark, or pilot light, such as on a water heater or on other appliances.

Hauling Safety

- Remove the electric-start button (if equipped) before loading the machine for hauling.
- Use care when loading or unloading the machine.
- Secure the machine from rolling.

Cleaning under the Machine

Service Interval: Before each use or daily

⚠ WARNING

The machine may dislodge material from under the machine.

- **Wear eye protection.**
- **Stay in the operating position (behind the handle) when the engine is running.**
- **Do not allow bystanders in the area.**

For best results, clean the machine soon after you have completed mowing.

1. Lower the machine to the lowest cutting-height setting. Refer to Adjusting the Cutting Height (page 11).
2. Move the machine onto a level surface.
3. Wash out the area under the rear door (if applicable) where the clippings go from the underside of the machine to the grass bag.
4. Attach a garden hose that is connected to a water supply to the washout port (Figure 34).

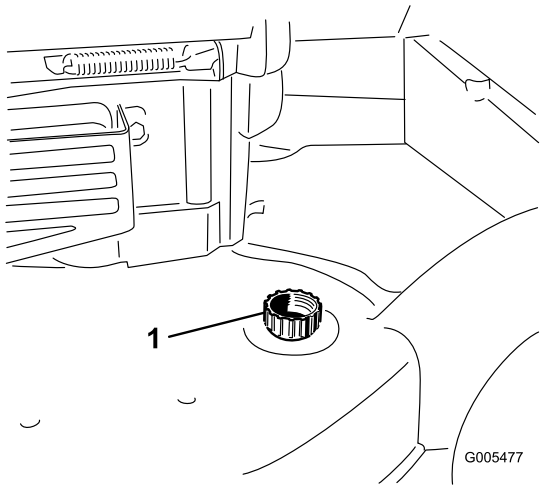

Figure 34

1. Washout port

5. Turn the water on.
6. Start the engine and run it until there are no more clippings that come out from under the machine.
7. Shut off the engine.
8. Shut off the water and disconnect the garden hose from the machine.
9. Start the engine and run it for a few minutes to dry the underside of the machine.
10. Shut off the engine and allow it to cool.

Folding the Handle

⚠ WARNING

Folding or unfolding the handle improperly can damage the cables, causing an unsafe operating condition.

- **Do not damage the cables when folding or unfolding the handle.**
- **If a cable is damaged, contact an Authorized Service Dealer.**

1. Remove the electric-start button as shown in Figure 35 (electric-start model only).

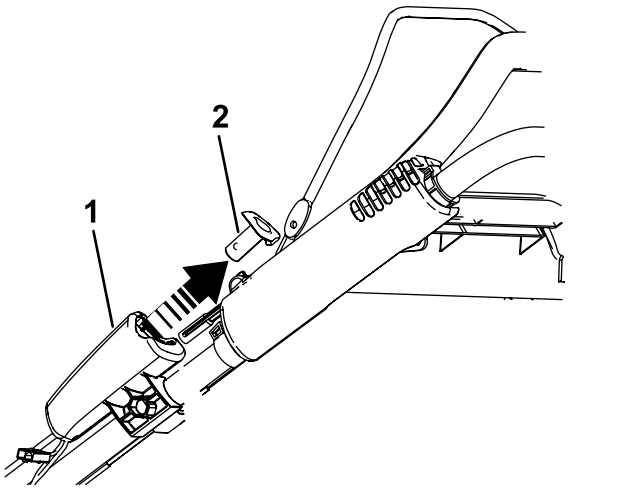

g186627

Figure 35

1. Electric starter
2. Electric-start button

2. Rotate the handle forward (Figure 36).

   Important: **Route the cables to the outside of the handle knobs as you fold the upper handle.**

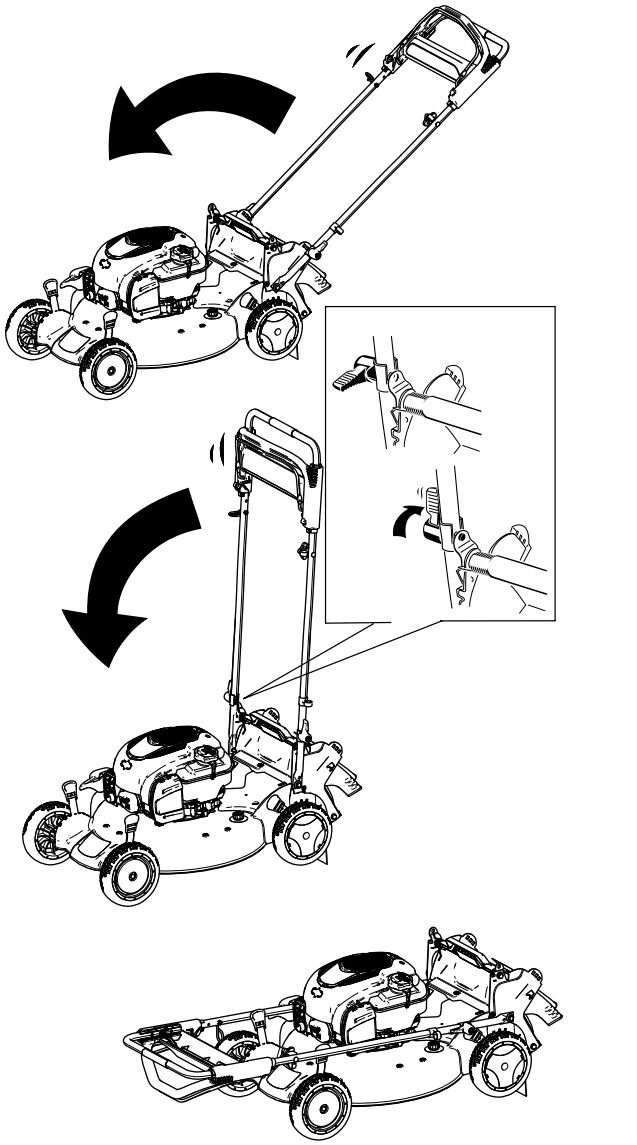

g187601

Figure 36

3. To unfold the handle, refer to 1 Assembling and Unfolding the Handle (page 6).

Maintenance

Recommended Maintenance Schedule(s)

Maintenance Service Interval	Maintenance Procedure
Before each use or daily	• Ensure that the engine shuts off within 3 seconds after releasing the blade-control bar. • Clean grass clippings and dirt from under the machine.
Every 25 hours	• Service the air filter; service it more frequently in dusty operating conditions. • Charge the battery (if equipped) for 24 hours.
Yearly	• Replace the air filter; replace it more frequently in dusty operating conditions. • Change the engine oil. • Replace the blade or have it sharpened (more frequently if the edge dulls quickly). • Lubricate the wheel gears. • Clean the engine by removing dirt and debris from its top and sides; clean it more frequently in dusty operating conditions.
Yearly or before storage	• Empty the fuel tank before repairs as directed and before yearly storage.

Important: **Refer to your engine manual for additional maintenance procedures.**

Maintenance Safety

- Disconnect the spark-plug wire from the spark plug and remove the electric-start button before performing any maintenance procedure.
- Wear gloves and eye protection when servicing the machine.
- The blade is sharp; contacting the blade can result in serious personal injury. Wear gloves when servicing the blade.
- Never tamper with safety devices. Check their proper operation regularly.
- Tipping the machine may cause the fuel to leak. Fuel is flammable and explosive, and can cause personal injury. Run the engine dry to remove the fuel with a hand pump; never siphon the fuel.
- To ensure optimum performance and continued safety certification of the machine, use only genuine Toro replacement parts and accessories. Replacement parts and accessories made by other manufacturers could be dangerous, and such use could void the product warranty.

Preparing for Maintenance

1. Shut off the engine, remove the electric-start button (if equipped), and wait for all moving parts to stop.
2. Disconnect the spark-plug wire from the spark plug (Figure 37).

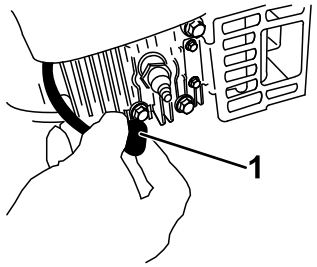

g226990

Figure 37

1. Spark-plug wire

3. After performing the maintenance procedure(s), connect the spark-plug wire to the spark plug.

   Important: **Before tipping the machine to change the oil or replace the blade, allow the fuel tank to run dry through normal usage. If you must tip the machine prior to running out of fuel, use a hand fuel pump to remove the fuel. Always tip the machine onto its side, with the dipstick down.**

Servicing the Air Filter

Service Interval: Every 25 hours

Yearly

1. Unclip the top of the air-filter cover (Figure 38).

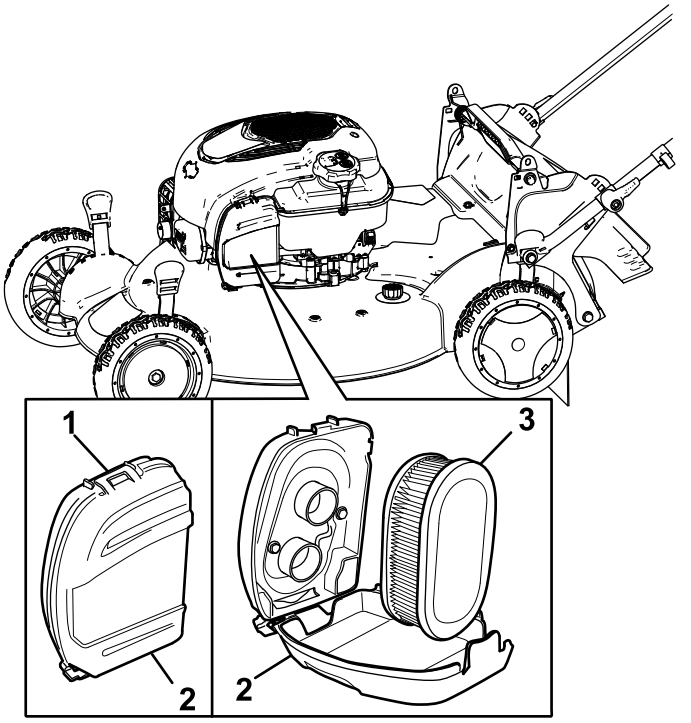

Figure 38

1. Clip
2. Air-filter cover
3. Air filter

2. Remove the air filter (Figure 38).
3. Inspect the air filter.

   Note: If the air filter is excessively dirty, replace it with a new filter. Otherwise, gently tap the air filter on a hard surface to loosen debris.
4. Install the air filter.
5. Use the clip to install the air-filter cover.

Changing the Engine Oil

Service Interval: Yearly

Changing the engine oil is not required, but if you want to change the oil, use the following procedure.

Note: Run the engine a few minutes before changing the oil to warm it. Warm oil flows better and carries more contaminants.

Engine Oil Specifications

Engine oil capacity	0.44 L (15 fl oz)
Oil viscosity	SAE 30 or SAE 10W-30 detergent oil
API service classification	SJ or higher

1. Move the machine to a level surface.
2. Refer to Preparing for Maintenance (page 20).
3. Remove the dipstick by rotating the cap counterclockwise and pulling it out (Figure 39).

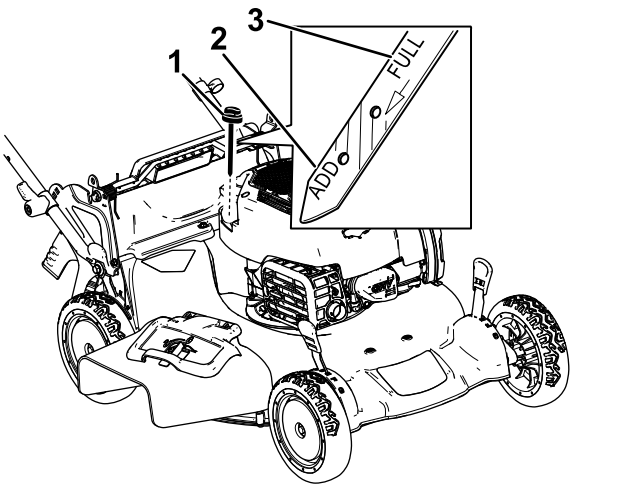

Figure 39

1. Dipstick
2. Add
3. Full

4. Tip the machine onto its side (so that the air filter is up) to drain the used oil from the oil-fill tube (Figure 40).

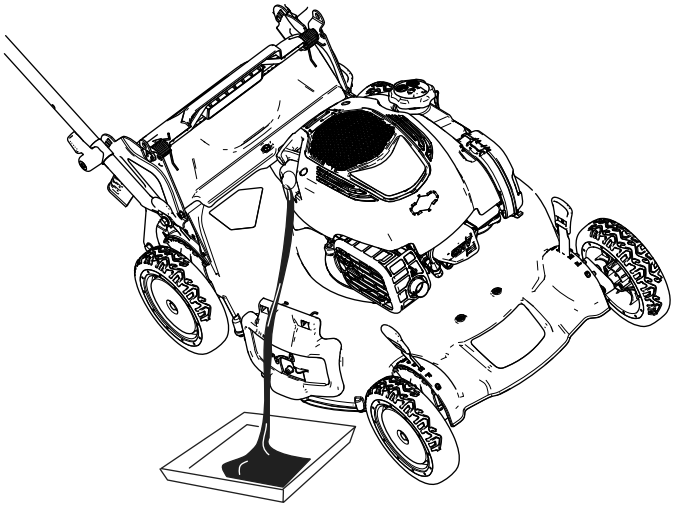

g187603

Figure 40

5. After draining the used oil, return the machine to the operating position.
6. Carefully pour about 3/4 of the engine capacity of oil into the oil-fill tube.
7. Wait 3 minutes for the oil to settle in the engine.
8. Wipe the dipstick clean with a clean cloth.
9. Insert the dipstick into the oil-fill tube, then remove the dipstick.
10. Read the oil level on the dipstick (Figure 39).
    - If the oil level on the dipstick is too low, carefully pour a small amount of oil into the oil-fill tube, wait 3 minutes, and repeat steps 8 through 10 until the oil level on the dipstick is correct.
    - If the oil level on the dipstick is too high, drain the excess oil until the oil level on the dipstick is correct.

    Important: **If the oil level in the engine is too low or too high and you run the engine, you may damage the engine.**
11. Install the dipstick into the oil-fill tube securely.
12. Recycle the used oil properly.

Charging the Battery

For Electric-Start Models

Service Interval: Every 25 hours

Charge the battery for 24 hours initially, then monthly (every 25 starts) or as needed. Always use the charger in a sheltered area and charge the battery at room temperature (22°C or 70°F) whenever possible.

1. Connect the charger to the wire harness located below the electric-start button (Figure 41).

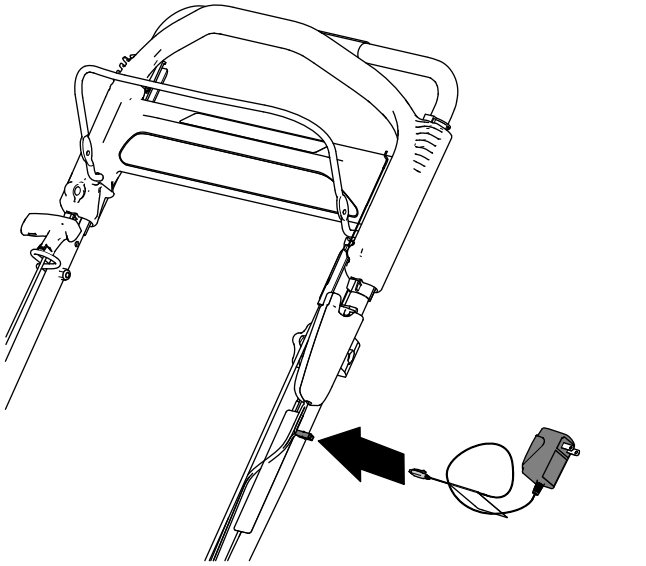

g189390

Figure 41

2. Plug the charger into a wall outlet.

   Note: When the battery no longer holds a charge, recycle or dispose of the lead-acid battery according to local codes.

Note: Your battery charger may have a 2-color LED display that indicates the following states of charging:

- A red light indicates that the charger is charging the battery.
- A green light indicates that the charger is fully charged or the charger is disconnected from the battery.
- A flashing light that alternates between red and green indicates that the battery is nearly fully charged. This state lasts only a few minutes until the battery is fully charged.

Replacing the Fuse

Electric-Start Model Only

If the battery does not charge or the engine does not run with the electric starter, the fuse may be blown. Replace it with a 40 A plug-in type fuse.

1. Remove the cover from the battery compartment (Figure 42).
2. Pull out the battery and locate the fuse (Figure 42).
3. Replace the fuse in the fuse holder (Figure 42).

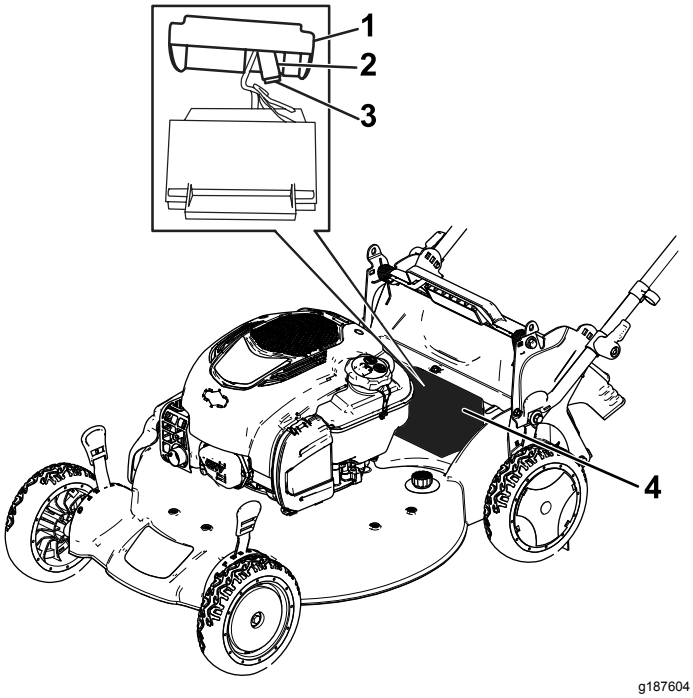

Figure 42

1. Cover
2. Fuse holder
3. Fuse
4. Battery compartment

Note: Your machine comes with a spare fuse in the battery compartment.

4. Install the cover over the battery compartment (Figure 42).

Replacing the Blade

Service Interval: Yearly

***Important:* *You will need a torque wrench to install the blade properly*. If you do not have a torque wrench or are uncomfortable performing this procedure, contact an Authorized Service Dealer.**

Examine the blade whenever you run out of fuel. If the blade is damaged or cracked, replace it immediately. If the blade edge is dull or nicked, have it sharpened and balanced, or replace it.

⚠ WARNING

The blade is sharp; contacting the blade can result in serious personal injury.

Wear gloves when servicing the blade.

1. Refer to Preparing for Maintenance (page 20).
2. Tip the machine onto its side with the air filter up.
3. Use a block of wood to hold the blade steady (Figure 43).

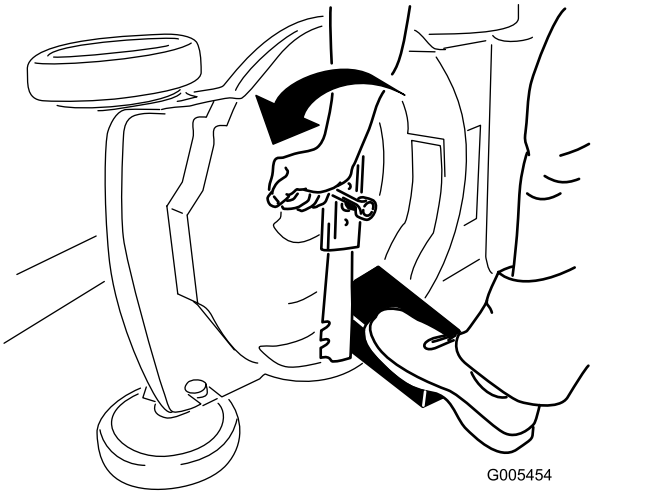

Figure 43

4. Remove the blade, saving all mounting hardware (Figure 44).
5. Install the new blade and all mounting hardware (Figure 44).

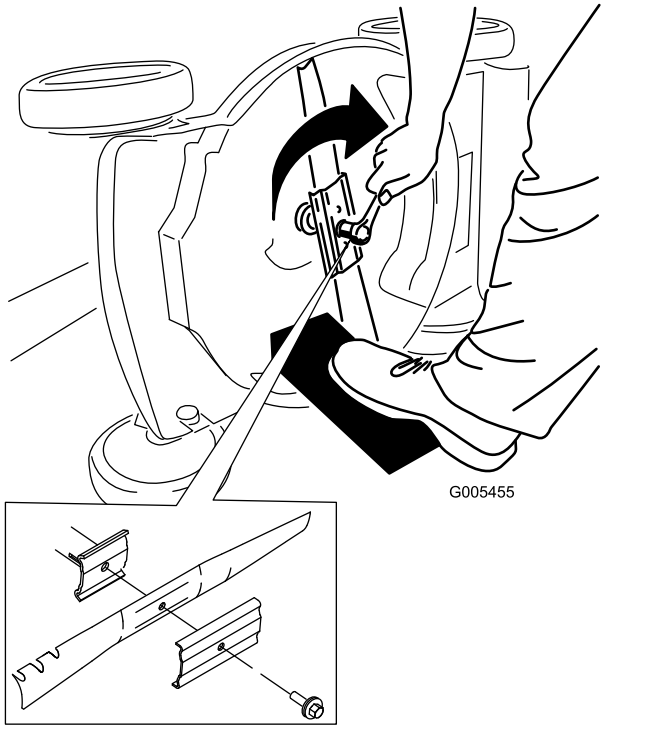

Figure 44

Important: **Position the curved ends of the blade to point toward the machine housing.**

6. **Use a torque wrench to tighten the blade bolt to 82 N·m (60 ft-lb).**

   Important: **A bolt torqued to 82 N·m (60 ft-lb) is very tight. While holding the blade with a block of wood, put your weight behind the ratchet or wrench and tighten the bolt securely. This bolt is very difficult to overtighten.**

Adjusting the Self-Propel Drive

Whenever you install a new self-propel cable or if the self-propel drive is out of adjustment, adjust the self-propel drive.

1. Turn the adjustment knob counterclockwise to loosen the cable adjustment (Figure 45).

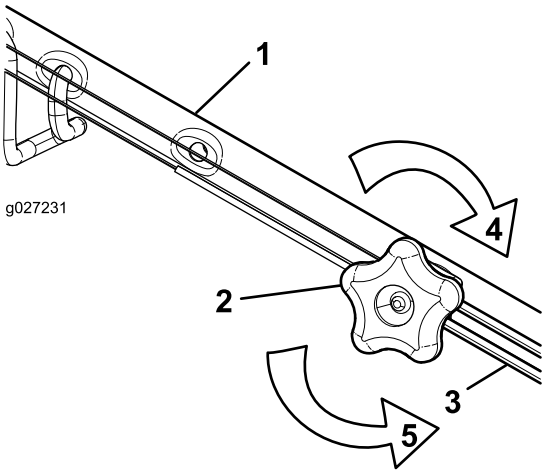

Figure 45

1. Handle (left side)
2. Adjustment knob
3. Self-propel-drive cable
4. Turn the knob clockwise to tighten the adjustment.
5. Turn the knob counterclockwise to loosen the adjustment.

2. Adjust the tension on the cable (Figure 45) by pulling it back or pushing it forward and holding that position.

   Note: Push the cable toward the engine to increase the traction; pull the cable away from the engine to decrease the traction.

3. Turn the adjustment knob clockwise to tighten the cable adjustment.

   Note: Tighten the knob firmly by hand.

Lubricating the Wheel Gears

Service Interval: Yearly

1. Wipe the grease fittings just inside the rear wheels with a clean rag (Figure 46).

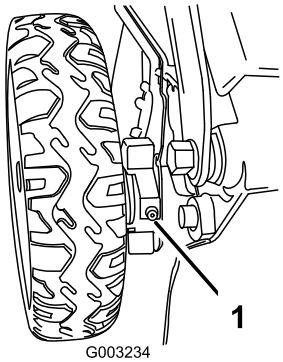

g003234

Figure 46

1. Grease fitting

2. Install a grease gun onto each fitting and gently apply 2 or 3 pumps of No. 2 lithium grease.

Storage

Store the machine in a cool, clean, dry place.

Preparing the Machine for Storage

1. On the last refueling of the year, add fuel stabilizer (such as Toro Premium Fuel Treatment) to the fuel as directed on the label.
2. Dispose of any unused fuel properly. Recycle it according to local codes or use it in your automobile.

   Note: Old fuel in the fuel tank is the leading cause of hard starting. Do not store fuel without fuel stabilizer more than 30 days, and do not store stabilized fuel more than 90 days.
3. Run the machine until the engine shuts off from running out of fuel.
4. Start the engine again and allow it to run until it shuts off. When you can no longer start the engine, it is sufficiently dry.
5. Disconnect the wire from the spark plug and connect the wire to the retaining post (if equipped) and remove the electric-start button (if equipped).
6. Remove the spark plug, add 30 ml (1 fl oz) of engine oil through the spark-plug hole, and pull the recoil-starter rope slowly several times to distribute oil throughout the cylinder to prevent cylinder corrosion during the off-season.
7. Loosely install the spark plug.
8. Tighten all nuts, bolts, and screws.
9. **Electric-start models only:** Charge the battery for 24 hours, then unplug the battery charger and store the machine in an unheated area. If you must store the machine in a heated area, you must charge the battery every 90 days. Refer to 4 Charging the Battery (page 7).

Removing the Machine from Storage

1. **Electric-start models only:** Charge the battery for 24 hours; refer to 4 Charging the Battery (page 7).
2. Check and tighten all fasteners.
3. Remove the spark plug and spin the engine rapidly by pulling the recoil-start handle to blow the excess oil from the cylinder.
4. Install the spark plug and tighten it with a torque wrench to 20 N·m (15 ft-lb).

5. Perform any maintenance procedures; refer to Maintenance (page 20).
6. Check the engine-oil level; refer to Checking the Engine-Oil Level (page 10).
7. Fill the fuel tank with fresh fuel; refer to Filling the Fuel Tank (page 10).
8. Connect the wire to the spark plug.

European Privacy Notice

The Information Toro Collects
Toro Warranty Company (Toro) respects your privacy. In order to process your warranty claim and contact you in the event of a product recall, we ask you to share certain personal information with us, either directly or through your local Toro company or dealer.

The Toro warranty system is hosted on servers located within the United States where privacy law may not provide the same protection as applies in your country.

BY SHARING YOUR PERSONAL INFORMATION WITH US, YOU ARE CONSENTING TO THE PROCESSING OF YOUR PERSONAL INFORMATION AS DESCRIBED IN THIS PRIVACY NOTICE.

The Way Toro Uses Information
Toro may use your personal information to process warranty claims, to contact you in the event of a product recall and for any other purpose which we tell you about. Toro may share your information with Toro's affiliates, dealers or other business partners in connection with any of these activities. We will not sell your personal information to any other company. We reserve the right to disclose personal information in order to comply with applicable laws and with requests by the appropriate authorities, to operate our systems properly or for our own protection or that of other users.

Retention of your Personal Information
We will keep your personal information as long as we need it for the purposes for which it was originally collected or for other legitimate purposes (such as regulatory compliance), or as required by applicable law.

Toro's Commitment to Security of Your Personal Information
We take reasonable precautions in order to protect the security of your personal information. We also take steps to maintain the accuracy and current status of personal information.

Access and Correction of your Personal Information
If you would like to review or correct your personal information, please contact us by email at legal@toro.com.

Australian Consumer Law

Australian customers will find details relating to the Australian Consumer Law either inside the box or at your local Toro Dealer.

The Toro Warranty and The Toro GTS Starting Guarantee

Conditions and Products Covered

The Toro Company and its affiliate, Toro Warranty Company, pursuant to an agreement between them, jointly promise to repair the Toro Product listed below if defective in materials or workmanship or if the Toro GTS (Guaranteed to Start) engine will not start on the first or second pull, provided the routine maintenance required in the *Operator's Manual* have been performed.

The following time periods apply from the original date of purchase:

Products	Warranty Period
Walk Power Mowers	
• Cast Deck	5 years Residential Use[2] 90 Days Commercial Use
—Engine	5 years GTS Guarantee, Residential Use[3]
—Battery	2 years
• Steel Deck	2 years Residential Use[2] 30 Days Commercial Use
—Engine	2 years GTS Guarantee, Residential Use[3]
TimeMaster Mowers	3 years Residential Use[2] 90 Days Commercial Use
• Engine	3 years GTS Guarantee, Residential Use[3]
• Battery	2 years
Electric Hand Held Products and Walk Power Mowers	2 years Residential Use[2] No Warranty for Commercial Use
All Ride-On Units Below	
• Engine	See engine manufacturer's warranty[4]
• Battery	2 years Residential Use[2]
• Attachments	2 years Residential Use[2]
DH Lawn & Garden Tractors	2 years Residential Use[2] 30 Days Commercial Use
XLS Lawn & Garden Tractors	3 years Residential Use[2] 30 Days Commercial Use
TimeCutter	3 years Residential Use[2] 30 Days Commercial Use

[1]Original Purchaser means the person who originally purchased the Toro Product.

[2]Residential use means use of the product on the same lot as your home. Use at more than one location is considered commercial use and the commercial use warranty would apply.

[3]The Toro GTS Starting Guarantee does not apply when the product is used commercially.

[4]Some engines used on Toro Products are warranted by the engine manufacturer.

Warranty may be denied if the hour meter is disconnected, altered, or shows signs of being tampered with.

Owner Responsibilities

You must maintain your Toro Product by following the maintenance procedures described in the *Operator's Manual*. Such routine maintenance, whether performed by a dealer or by you, is at your expense.

Instructions for Obtaining Warranty Service

If you think that your Toro Product contains a defect in materials or workmanship, follow this procedure:

1. Contact your seller to arrange service of the product. If for any reason it is impossible for you to contact your seller, you may contact any Toro Authorized Distributor to arrange service. Visit http://www.toro.com/en-us/locator/pages/default.aspx to locate a Toro distributor in your area.
2. Bring the product and your proof of purchase (sales receipt) to the servicing outlet. If for any reason you are dissatisfied with the servicing outlet's analysis or with the assistance provided, contact us at:

   Toro Warranty Company
   Toro Customer Care Department, RLC Division
   8111 Lyndale Avenue South
   Bloomington, MN 55420-1196
   001–952–948–4707

Items and Conditions Not Covered

There is no other express warranty except for special emission system coverage and engine warranty coverage on some products. This express warranty does not cover the following:

- Cost of regular maintenance service or parts, such as filters, fuel, lubricants, oil changes, spark plugs, air filters, blade sharpening or worn blades, cable/linkage adjustments, or brake and clutch adjustments
- Components failing due to normal wear
- Any product or part which has been altered, misused, neglected, requires replacement, or repair due to accidents or lack of proper maintenance
- Pickup and delivery charges
- Repairs or attempted repairs by anyone other than an Authorized Toro Service Dealer
- Repairs necessary due to failure to follow recommended fuel procedure (consult *Operator's Manual* for more details)
  - Removing contaminants from the fuel system is not covered
  - Use of old fuel (more than one month old) or fuel which contains more than 10% ethanol or more that 15% MTBE
  - Failure to drain the fuel system prior to any period of non-use over one month
- Repairs or adjustments to correct starting difficulties due to the following:
  - Failure to follow proper maintenance procedures or recommended fuel procedure
  - Rotary mower blade striking an object
- Special operational conditions where starting may require more than two pulls:
  - First time starts after extended period of non-use over three months or seasonal storage
  - Cool temperature starts such as those found in early spring and late autumn
  - Improper starting procedures - if you are having difficulty starting your unit, please check the *Operator's Manual* to ensure that you are using the correct starting procedures. This can save an unnecessary visit to an Authorized Toro Service Dealer.

General Conditions

The purchaser is covered by the national laws of each country. The rights to which the purchaser is entitled with the support of these laws are not restricted by this warranty.