Form No. 3400-729 Rev C

TORO®

Count on it.

Operator's Manual

TimeCutter® ZS 4200T or ZS 5000 Riding Mower

Model No. 74657—Serial No. 316000001 and Up
Model No. 74661—Serial No. 316000001 and Up

Register at www.Toro.com.
Original Instructions (EN)

CE

3400-729 C

This product complies with all relevant European directives; for details, please see the separate product specific Declaration of Conformity (DOC) sheet.

⚠ WARNING

CALIFORNIA
Proposition 65 Warning

This product contains a chemical or chemicals known to the State of California to cause cancer, birth defects, or reproductive harm.

The engine exhaust from this product contains chemicals known to the State of California to cause cancer, birth defects, or other reproductive harm.

Use of this product may cause exposure to chemicals known to the State of California to cause cancer, birth defects, or other reproductive harm.

It is a violation of California Public Resource Code Section 4442 or 4443 to use or operate the engine on any forest-covered, brush-covered, or grass-covered land unless the engine is equipped with a spark arrester, as defined in Section 4442, maintained in effective working order or the engine is constructed, equipped, and maintained for the prevention of fire.

For models with stated engine horsepower, the gross horsepower of the engine was laboratory tested by the engine manufacturer in accordance with SAE J1995 and rated to J2723. As configured to meet safety, emission, and operating requirements, the actual engine horsepower on this class of lawn mower will be significantly lower.

Go to www.Toro.com to view specifications on your mower model.

This spark ignition system complies with Canadian ICES-002

Introduction

This machine is a ride-on, rotary-blade intended to be used by homeowners in residential applications. It is primarily designed for cutting grass on well-maintained lawns. It is not designed for cutting brush, mowing grass and other growth alongside highways, or for agricultural uses.

Read this information carefully to learn how to operate and maintain your product properly and to avoid injury and product damage. You are responsible for operating the product properly and safely.

You may contact Toro directly at www.Toro.com for product safety and operation training materials, accessory information, help finding a dealer, or to register your product.

Whenever you need service, genuine Toro parts, or additional information, contact an Authorized Service Dealer or Toro Customer Service and have the model and serial numbers of your product ready. Figure 1 identifies the location of the model and serial numbers on the product. Write the numbers in the space provided.

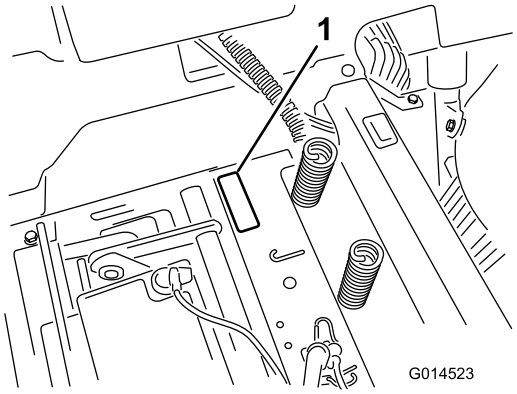

g014523

Figure 1
Under the seat

1. Model and serial-number plate

Write the product model and serial numbers in the space below:

Model No. _____

Serial No. _____

This manual identifies potential hazards and has safety messages identified by the safety-alert symbol (Figure 2), which signals a hazard that may cause serious injury or death if you do not follow the recommended precautions.



g000502

Figure 2

1. Safety-alert symbol

This manual uses 2 words to highlight information. **Important** calls attention to special mechanical information and **Note** emphasizes general information worthy of special attention.

© 2017—The Toro® Company
8111 Lyndale Avenue South
Bloomington, MN 55420

Contact us at www.Toro.com.
Printed in the USA
All Rights Reserved

Contents

Safety 4
Safe Operating Practices 4
Model 74657 6
Model 74661 7
Slope Indicator 8
Safety and Instructional Decals 9
Product Overview 15
Controls 15
Operation 17
Adding Fuel 17
Checking the Engine-Oil Level 18
Breaking in a New Machine 18
Think Safety First 19
Understanding the Safety-Interlock System 19
Testing the Safety-Interlock System 20
Starting the Engine 20
Operating the Blades 21
Shutting Off the Engine 21
Driving the Machine 21
Shutting Off the Machine 24
Adjusting the Height of Cut 24
Adjusting the Anti-Scalp Rollers 25
Adjusting the Anti-Scalp Rollers 25
Positioning the Seat 25
Adjusting the Motion-Control Levers 26
Pushing the Machine by Hand 26
Converting to Side Discharge 27
Converting to Side Discharge 28
Transporting the Machine 30
Loading the Machine 30
Operating Tips 32
Maintenance 33
Recommended Maintenance Schedule(s) 33
Pre-Maintenance Procedures 34
Raising the Seat 34
Releasing the Mower-Deck Curtain 34
Lubrication 34
Greasing the Bearings 34
Engine Maintenance 35
Servicing the Air Cleaner 35
Servicing the Engine Oil 36
Servicing the Spark Plug 39
Cleaning the Cooling System 40
Fuel System Maintenance 41
Replacing the In-Line Fuel Filter 41
Electrical System Maintenance 42
Charging the Battery 42
Servicing the Fuses 43
Drive System Maintenance 44
Checking the Tire Pressure 44
Releasing the Electric Brake 44
Mower Maintenance 45
Servicing the Cutting Blades 45
Leveling the Mower Deck 48
Removing the Mower 50
Installing the Mower 50
Replacing the Grass Deflector 51
Mower Belt Maintenance 52
Inspecting the Belts 52
Replacing the Mower Belt 52
Cleaning 53
Washing the Underside of the Mower 53
Storage 54
Cleaning and Storage 54
Troubleshooting 55
Schematics 57

Safety

This machine has been designed in accordance with EN ISO 5395:2013.

To reduce the potential for injury, comply with these safety instructions and always pay attention to the safety-alert symbol, which means Caution, Warning, or Danger—personal safety instruction. Failure to comply with the instruction may result in personal injury or death.

Safe Operating Practices

This product is capable of amputating hands and feet and throwing objects. Always follow all safety instructions to avoid serious injury or death.

The following instructions are adapted from EN ISO 5395:2013.

General Operation

- Read, understand, and follow all instructions in the *Operator's Manual* and on the machine before starting.
- Do not place your hands or feet near rotating parts or under the machine. Keep clear of the discharge opening at all times.
- Allow only responsible adults who are familiar with the instructions to operate the machine.
- Clear the area of objects such as rocks, toys, wire, etc., which could be picked up and thrown by the blade.
- Be sure the area is clear of other people before mowing. Stop the machine if anyone enters the area.
- Never carry passengers.
- Do not mow in reverse unless absolutely necessary. Always look down and behind before and while backing up.
- Be aware of the mower discharge direction and do not point it at anyone. Avoid discharging material against a wall or obstruction. Material may ricochet back toward you. Stop the blade(s) when crossing gravel surfaces.
- Do not operate the machine without deflector, discharge cover or entire grass collection system in place and working.
- Be alert, slow down and use caution when making turns. Look behind and to the side before changing directions.
- Never leave a running machine unattended. Always turn off the blades, set the parking brake, shut off the engine, and remove the key before dismounting the machine.
- Turn off the blades when not mowing. Shut off the engine, wait for all parts to come to a complete stop and remove the key before cleaning the machine, removing the grass catcher or unclogging the discharge chute.
- Operate the machine only in daylight or good artificial light.
- Do not operate the machine while ill, tired, or under the influence of alcohol or drugs.
- Watch for traffic when operating near or crossing roadways.
- Use extra care when loading or unloading the machine into a trailer or truck.
- Wear appropriate clothing including eye protection, hearing protection, and substantial, slip-resistant footwear. Tie back long hair. Do not wear jewelry.
- Always follow the recommendations for any application of counterweights.
- Lightning can cause severe injury or death. If lightning is seen or thunder is heard in the area, do not operate the machine; seek shelter.

Slope Operation

Slopes are a major factor related to loss of control and tip-over accidents, which can result in severe injury or death. Operation on all slopes requires extra caution. If you cannot back up the slope or if you feel uneasy on it, do not mow it.

- Do not mow slopes greater than 15 degrees.
- Watch for ditches, holes, rocks, dips, and rises that change the operating angle, as rough terrain could overturn the machine.
- Choose a low ground speed so that you will not have to stop while operating on a slope.
- Do not mow slopes when grass is wet. Slippery conditions reduce traction and could cause sliding and loss of control.
- Always keep the drive wheels engaged when going down slopes.
- Reduce speed and use extreme caution on slopes.
- Do not make sudden turns or rapid speed changes.
- Remove or mark obstacles such as rocks, tree limbs, etc. from the mowing area. Tall grass can hide obstacles.
- Avoid sudden starts when mowing uphill because the mower may tip backwards.
- Be aware that loss of traction may occur going downhill. Weight transfer to the front wheels may cause drive wheels to slip and cause loss of braking and steering.

- Always avoid sudden starting or stopping on a slope. If the tires lose traction, stop the machine, disengage the blades and proceed slowly off down the slope.
- Use extreme care with grass catchers or other attachments. These can change the stability of the machine and cause loss of control.
- Do not try to stabilize the machine by putting your foot on the ground.
- Do not mow near drop-offs, ditches, steep banks or water. Wheels dropping over edges can cause rollovers, which may result in serious injury, death or drowning.
- Use a walk behind mower and/or a hand trimmer near drop-offs, ditches, steep banks or water.

Children

Tragic accidents can occur if the operator is not alert to the presence of children. Children are often attracted to the machine and the mowing activity. Never assume that children will remain where you last saw them.

- Keep children out of the mowing area and under the watchful care of another responsible adult, not the operator.
- Be alert and turn the machine off if children enter the area.
- Before and while backing or changing direction, look behind, down, and side-to-side for small children.
- Never carry children on the machine, even with the blades off. Children may fall off and be seriously injured or interfere with safe operation of the machine.
- Children who have been given rides in the past may suddenly appear in the mowing area for another ride and be run over or backed over by the mower.
- Never allow children to operate the machine.
- Use extra care when approaching blind corners, shrubs, trees, the end of a fence or other objects that may obscure vision.

Towing Safety

- Do not attach towed equipment except at the hitch point.
- Follow the attachment manufacturer's recommendation for weight limits for towed equipment and towing on slopes. Towed weight must not exceed the weight of the machine, operator, and ballast. Use counterweights or wheel weights as described in the attachment, or in towing the machine *Operator's Manual*.
- Never allow children or others in or on towed equipment.
- On slopes, the weight of the towed equipment may cause loss of traction, increased risk of rollover, and loss of control. Reduce the towed weight and slow down.
- The stopping distance increases with the weight of the towed load. Travel slowly and allow extra distance to stop.
- Make wide turns to keep the attachment clear of the machine.

Safe Handling of Gasoline

To avoid personal injury or property damage, use extra care when handling gasoline and other fuels. They are flammable and the vapors are explosive.

- Extinguish all cigarettes, cigars, pipes and other sources of ignition.
- Use only an approved container.
- Never remove the fuel cap or add fuel when the engine is running. Allow the engine to cool before refueling.
- Never refuel the machine indoors.
- Never store the machine or fuel container inside where there is an open flame, such as near a water heater or furnace.
- Never fill containers inside a vehicle or on a truck or trailer with a plastic liner. Always place containers on the ground away from your vehicle before filling.
- Remove fuel-powered equipment from the truck or trailer and refuel it on the ground. If this is not possible, then refuel such equipment with a portable container, rather than from a gasoline dispenser nozzle.
- Keep the nozzle in contact with the rim of the fuel tank or container opening at all times until the fueling is complete. Do not use a nozzle lock-open device.
- If you spill fuel on clothing, change your clothing immediately.
- Never overfill the fuel tank. Replace the fuel cap and tighten it securely.

General Service

- Never operate a machine inside a closed area. Engine exhaust contains carbon monoxide, which is an odorless, deadly poison that can kill you.
- Keep nuts and bolts tight, especially the blade attachment bolts. Keep equipment in good condition.
- Never interfere with the intended function of a safety device or to reduce the protection provided by a safety device. Check their proper operation regularly.
- Keep the machine free of grass, leaves, or other debris buildup. Clean up oil or fuel spills and fuel-soaked debris. Allow the machine to cool before storing .
- Stop and inspect the equipment if you strike an object. Repair, if necessary, before starting.
- Never make any adjustments or repairs with the engine running.
- Grass catcher components are subject to wear, damage and deterioration, which could expose moving parts or allow objects to be thrown. Frequently check components and replace with manufacturers' recommended parts, when necessary.
- Mower blades are sharp and can cut. Wrap the blade(s) or wear thickly-padded gloves, and use extra caution when servicing them.
- Check for proper brake operation frequently. Adjust and service as required.
- Maintain or replace safety and instruction decals as necessary.
- Use only genuine Toro replacement parts to ensure that original standards are maintained.

Model 74657

Sound Pressure

This unit has a sound pressure level at the operator’s ear of 89 dBA, which includes an Uncertainty Value (K) of 1 dBA.

Sound power level was determined according to the procedures outlined in EN ISO 5395:2013.

Sound Power

This unit has a guaranteed sound power level of 100 dBA, which includes an Uncertainty Value (K) of 1 dBA.

Sound pressure level was determined according to the procedures outlined in ISO 11094.

Hand/Arm Vibration

Measured vibration level for left hand = 1.1 m/s^2

Measured vibration level for right hand = 1.2 m/s^2

Uncertainty Value (K) = 0.6 m/s^2

Measured values were determined according to the procedures outlined in EN ISO 5395:2013.

Whole-Body Vibration

Measured vibration level = 0.36 m/s^2

Uncertainty Value (K) = 0.18 m/s^2

Measured values were determined according to the procedures outlined in EN ISO 5395:2013.

Model 74661

Sound Pressure

This unit has a sound pressure level at the operator's ear of 93 dBA, which includes an Uncertainty Value (K) of 1 dBA.

Sound power level was determined according to the procedures outlined in EN ISO 5395:2013.

Sound Power

This unit has a guaranteed sound power level of 105 dBA, which includes an Uncertainty Value (K) of 1 dBA.

Sound power level was determined according to the procedures outlined in ISO 11094.

Hand/Arm Vibration

Measured vibration level for left hand = 3.1 m/s^2

Measured vibration level for right hand = 2.4 m/s^2

Uncertainty Value (K) =1.5 m/s^2

Measured values were determined according to the procedures outlined in EN ISO 5395:2013.

Whole-Body Vibration

Measured vibration level = 0.37 m/s^2

Uncertainty Value (K) = 0.19 m/s^2

Measured values were determined according to the procedures outlined in EN ISO 5395:2013.

Slope Indicator

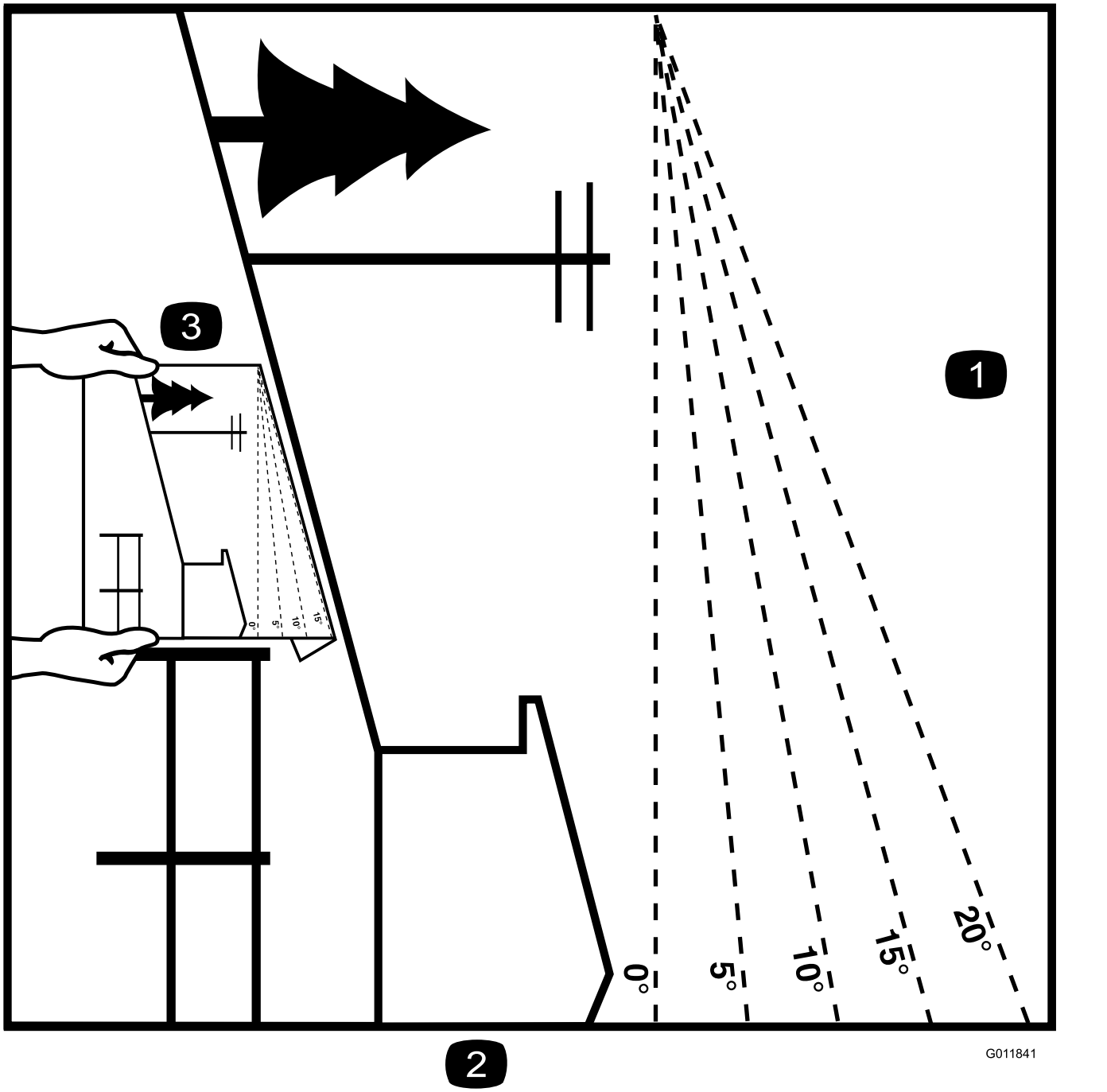

g011841

Figure 3

This page may be copied for personal use.

1. The maximum slope you can safely operate the machine on is **15 degrees**. Use the slope chart to determine the degree of slope of hills before operating. **Do not operate this machine on a slope greater than 15 degrees.** Fold along the appropriate line to match the recommended slope.
2. Align this edge with a vertical surface, a tree, building, fence pole, etc.
3. Example of how to compare slope with folded edge

Safety and Instructional Decals

Safety decals and instructions are easily visible to the operator and are located near any area of potential danger. Replace any decal that is damaged or lost.



decal93-7009

93-7009

1. Warning—don't operate the mower with the deflector up or removed; keep the deflector in place.
2. Cutting/dismemberment hazard of hand or foot, mower blade—stay away from moving parts.

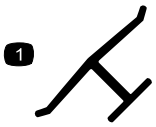

decaloemmarkt

Manufacturer's Mark

1. Indicates the blade is identified as a part from the original machine manufacturer.

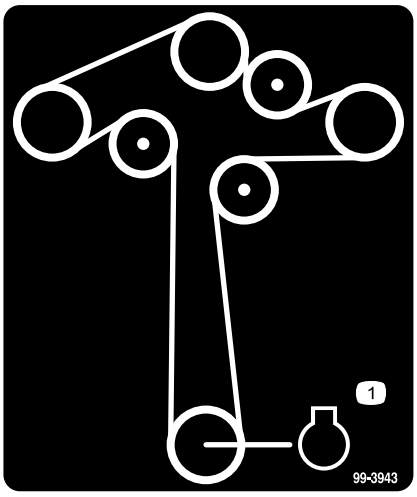

decal99-3943

99-3943

For Models with 127 cm (50 inch) Decks

1. Engine

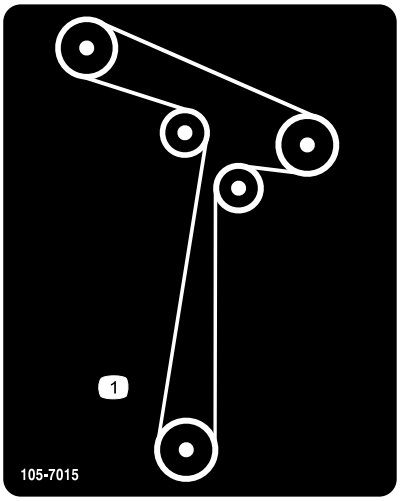

decal105-7015

105-7015

For Models with 107 cm (42 inch) Decks

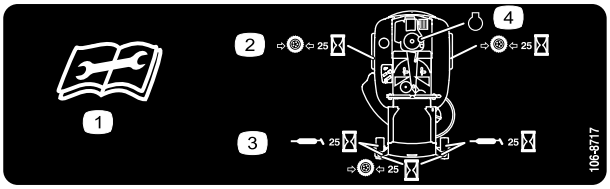

decal106-8717

106-8717

1. Read the instructions before servicing or performing maintenance.
2. Check tire pressure every 25 operating hours.
3. Grease every 25 operating hours.
4. Engine

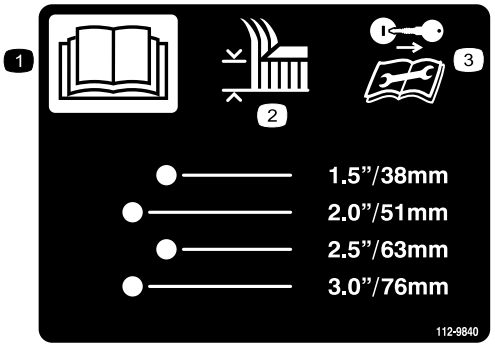

decal112-9840

112-9840

For Models with 127 cm (50 inch) Decks

1. Read the *Operator's Manual*.
2. Height of cut
3. Remove the ignition key and read the instructions before servicing or performing maintenance.

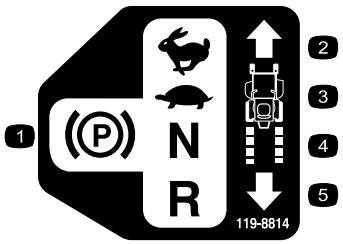

decal119-8814

119-8814

1. PARK
2. FAST
3. SLOW
4. NEUTRAL
5. REVERSE

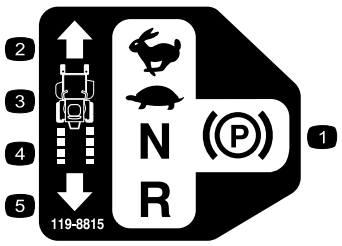

decal119-8815

119-8815

1. PARK
2. FAST
3. SLOW
4. NEUTRAL
5. REVERSE

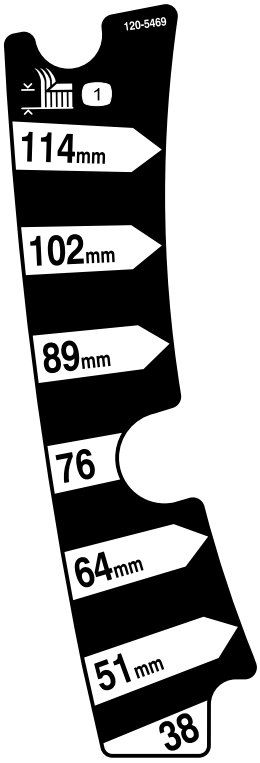

decal120-5469

120-5469

For Models with 107 cm (42 inch) Decks

1. Height of cut

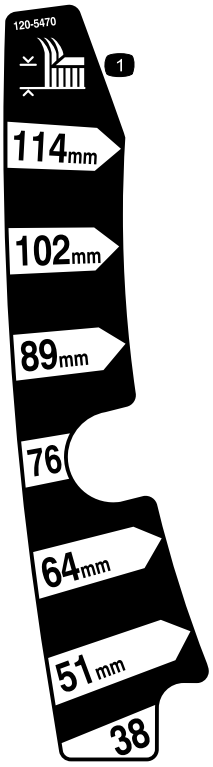

decal120-5470

120-5470

For Models with 127 cm (50 inch) Decks

1. Height of cut

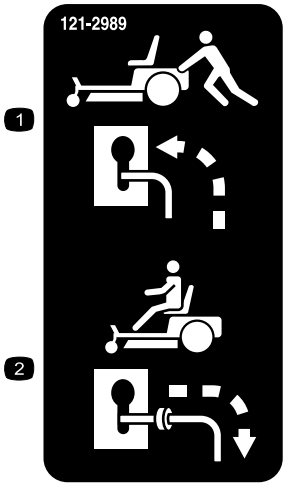

decal121-2989b

121-2989

1. Bypass lever position for pushing the machine
2. Bypass lever position for operating the machine

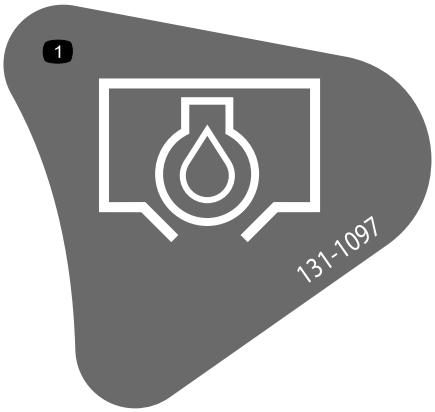

decal131-1097

131-1097

1. Oil drain

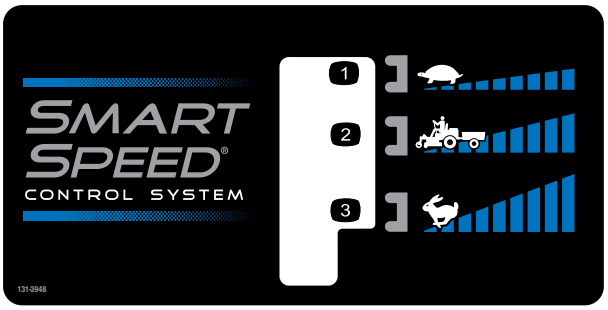

decal131-3948

131-3948

1. Slow
2. Towing
3. Fast



decalbatterysymbols

Battery Symbols

Some or all of these symbols are on your battery.

1. Explosion hazard
2. No fire, open flame, or smoking
3. Caustic liquid/chemical burn hazard
4. Wear eye protection.
5. Read the *Operator's Manual.*
6. Keep bystanders a safe distance from the battery.
7. Wear eye protection; explosive gases can cause blindness and other injuries.
8. Battery acid can cause blindness or severe burns.
9. Flush eyes immediately with water and get medical help fast.
10. Contains lead; do not discard.



decal131-4036

131-4036

1. Maximum drawbar pull 36 kg (80 lb)
2. Read the *Operator's Manual*.

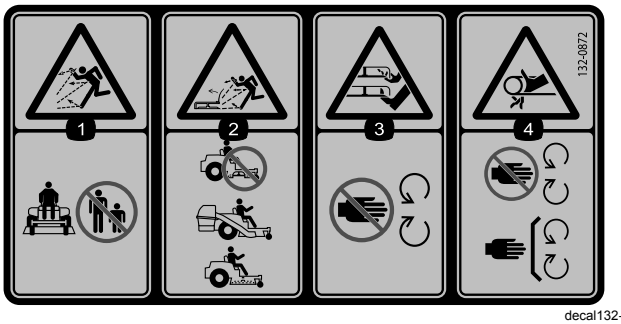

decal132-0872

132-0872

1. Thrown object hazard—keep bystanders away from the machine.
2. Thrown object hazard, raised baffle—do not operate the machine with an open deck; use a bagger or a baffle.
3. Severing hazard of hand or foot—keep away from moving parts.
4. Entanglement hazard—keep away from moving parts; keep all guards and shields in place.

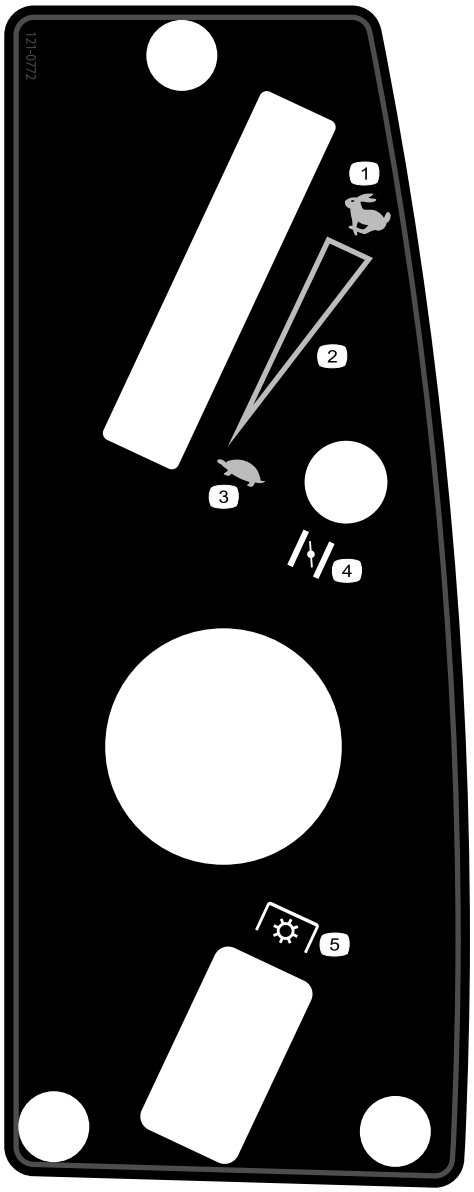

decal121-0772

121-0772

For Models with 107 cm (42 inch) Decks

1. Fast
2. Continuous-variable setting
3. Slow
4. Choke
5. Power take-off (PTO), blade-control switch

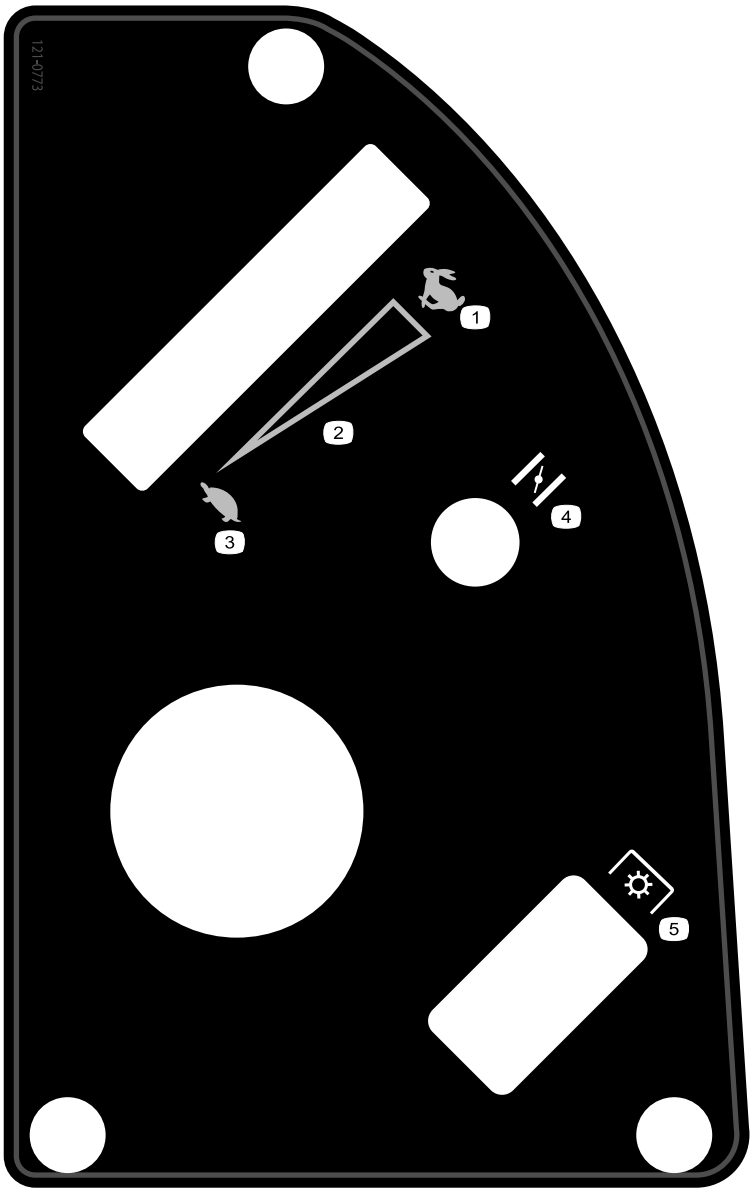

decal121-0773

121-0773

For Models with 127 cm (50 inch) Decks

1. Fast
2. Continuous-variable setting
3. Slow
4. Choke
5. Power take-off (PTO), blade-control switch

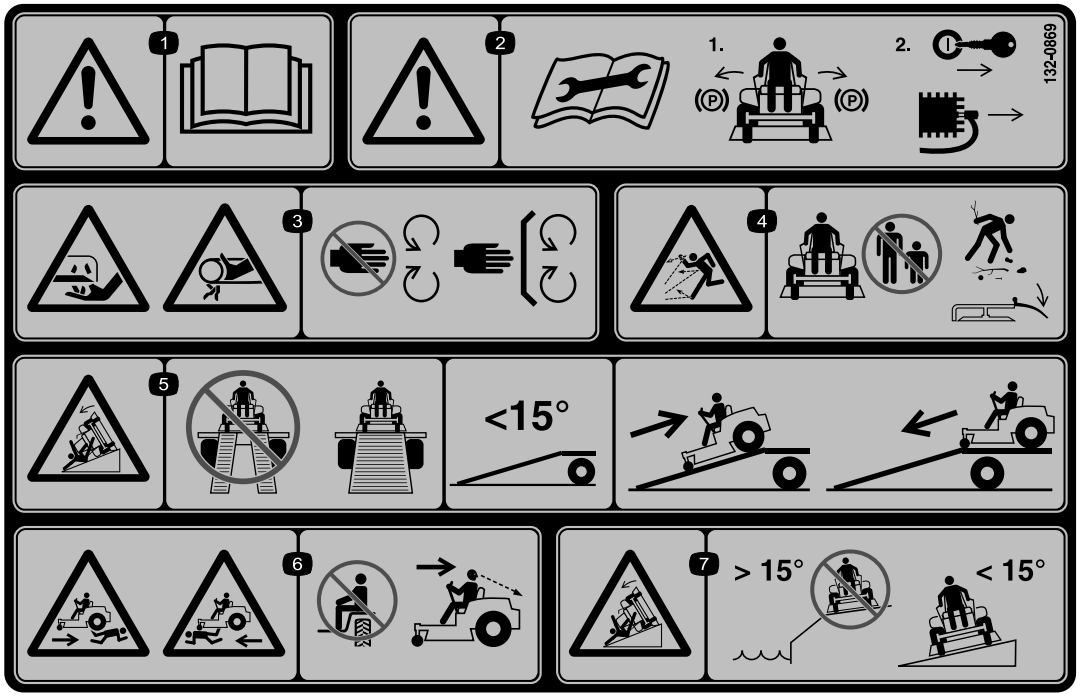

decal132-0869

132-0869

1. Warning—read the *Operator's Manual*.
2. Warning—before servicing, engage the parking brake, remove the key and the spark-plug connection.
3. Cutting hazard of hand, mower blade; pinching hazard of hand, belt—keep hands and feet away from moving parts; keep all guards and shields in place.
4. Thrown object hazard—keep bystanders away from the machine; remove debris from the area before mowing; keep the deflector shield down.
5. Ramp tipping hazard—when loading onto a trailer, do not use dual ramps; only use a single ramp wide enough for the machine and that has an incline less than 15 degrees; back up the ramp (in reverse) and drive forward off the ramp.
6. Bodily harm hazard—no riders; look behind you when mowing in reverse.
7. Tipping hazard on slopes—do not use on slopes near open water; do not use on slopes greater than 15 degrees.

Product Overview

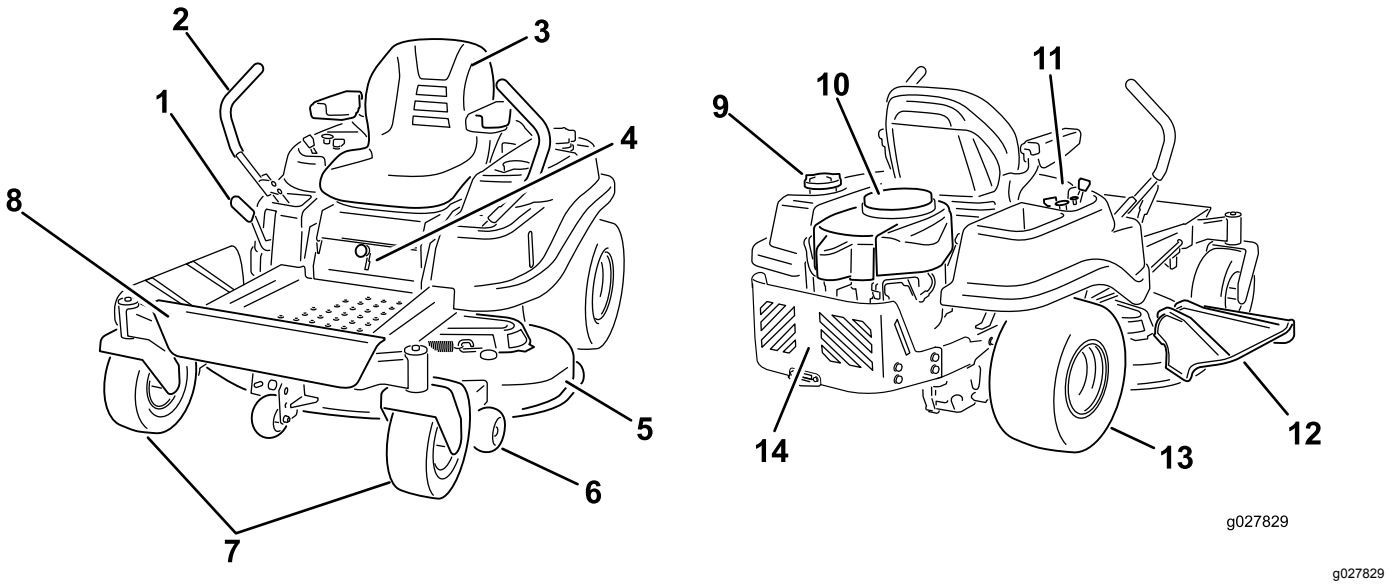

g027829

Figure 4

1. Height-of-cut lever
2. Motion-control levers
3. Operator seat
4. Smart Speed™ lever
5. Mower deck
6. Anti-scalp roller
7. Front caster wheel
8. Footrest
9. Fuel-tank cap
10. Engine
11. Control panel
12. Deflector
13. Rear-drive wheel
14. Engine guard

Controls

Become familiar with all of the controls in Figure 4 and Figure 5 before you start the engine and operate the machine.

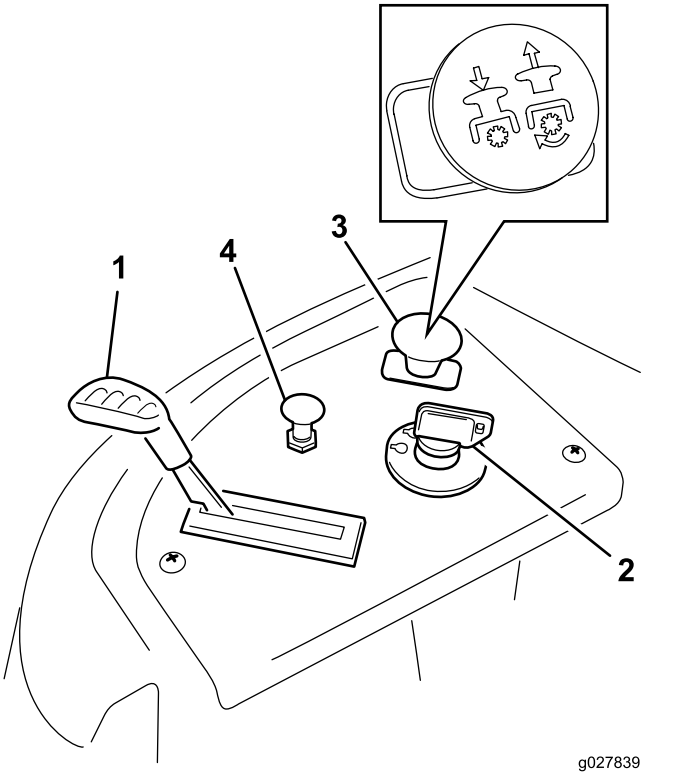

Figure 5
Control Panel

1. Throttle
2. Ignition switch
3. Blade-control switch (power take-off)
4. Choke

Ignition Switch

The ignition switch has 3 positions: OFF, RUN, and START. The key turns to START and move back to RUN upon release. Turning the key to the OFF position shuts off the engine; however, always remove the key when leaving the machine to prevent someone from accidentally starting the engine (Figure 5).

Throttle Control

The throttle controls the engine speed, and it has a continuous-variable setting from the SLOW to FAST position (Figure 5).

Choke Control

Pull up on the choke control until it stops to choke the engine (Figure 5). Push down on the choke control for normal engine operation.

Blade-Control Switch (Power Takeoff)

The blade-control switch, represented by a power takeoff (PTO) symbol, engages and disengages power to the mower blades (Figure 5).

Motion-Control Levers and Park Position

The motion-control levers are speed-sensitive controls of independent-wheel motors. Moving a lever forward or backward turns the wheel on the same side forward or in reverse; wheel speed is proportional to the amount the lever is moved. Move the control levers outward from the center to the PARK position when exiting the machine (Figure 13). Always position the motion-control levers into the PARK position when you stop the machine or leave it unattended.

Smart Speed™ Control System Lever

The Smart Speed™ Control-System lever, located below the operating position, gives the operator a choice to drive the machine at 3 speed ranges— trim, tow, and mow (Figure 16).

Fuel-Presence Window

The fuel window located on the left side of the machine, can be used to verify the presence of gasoline in the tank (Figure 6).

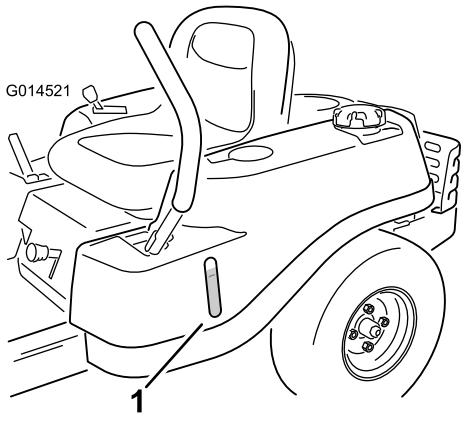

Figure 6

1. Fuel-presence window

Height-of-Cut Lever

The height-of-cut lever allows the operator to lower and raise the deck from the seated position. When the lever is moved up (toward the operator), the deck is raised from the ground, and when moved down (away

from the operator), it is lowered toward the ground. Adjust the height of cut only while the machine is not moving.

Operation

Note: Determine the left and right sides of the machine from the normal operating position.

Adding Fuel

- For best results, use only clean, fresh (less than 30 days old), unleaded gasoline with an octane rating of 87 or higher ((R+M)/2 rating method).
- **Ethanol**: Gasoline with up to 10% ethanol (gasohol) or 15% MTBE (methyl tertiary butyl ether) by volume is acceptable. Ethanol and MTBE are not the same. Gasoline with 15% ethanol (E15) by volume is not approved for use. **Never use gasoline that contains more than 10% ethanol by volume**, such as E15 (contains 15% ethanol), E20 (contains 20% ethanol), or E85 (contains up to 85% ethanol). Using unapproved gasoline may cause performance problems and/or engine damage which may not be covered under warranty.
- **Do not** use gasoline containing methanol.
- **Do not** store fuel either in the fuel tank or fuel containers over the winter unless a fuel stabilizer is used.
- **Do not** add oil to gasoline.

⚠ DANGER

In certain conditions, gasoline is extremely flammable and highly explosive. A fire or explosion from gasoline can burn you and others and can damage property.

- **Fill the fuel tank outdoors, in an open area, when the engine is cold. Wipe up any gasoline that spills.**
- **Never fill the fuel tank inside an enclosed trailer.**
- **Do not fill the fuel tank completely full. Add gasoline to the fuel tank until the level is 6 to 13 mm (1/4 to 1/2 inch) below the bottom of the filler neck. This empty space in the tank allows gasoline to expand.**
- **Never smoke when handling gasoline, and stay away from an open flame or where gasoline fumes may be ignited by a spark.**
- **Store gasoline in an approved container and keep it out of the reach of children. Never buy more than a 30-day supply of gasoline.**
- **Do not operate without entire exhaust system in place and in proper working condition.**

⚠ DANGER

In certain conditions during fueling, static electricity can be released causing a spark which can ignite the gasoline vapors. A fire or explosion from gasoline can burn you and others and can damage property.

- **Always place gasoline containers on the ground away from your vehicle before filling.**
- **Do not fill gasoline containers inside a vehicle or on a truck or trailer bed because interior carpets or plastic truck bed liners may insulate the container and slow the loss of any static charge.**
- **When practical, remove gas-powered equipment from the truck or trailer and refuel the equipment with its wheels on the ground.**
- **If this is not possible, then refuel such equipment on a truck or trailer from a portable container, rather than from a gasoline dispenser nozzle.**
- **If a gasoline dispenser nozzle must be used, keep the nozzle in contact with the rim of the fuel tank or container opening at all times until fueling is complete.**

⚠ WARNING

Gasoline is harmful or fatal if swallowed. Long-term exposure to vapors can cause serious injury and illness.

- **Avoid prolonged breathing of vapors.**
- **Keep face away from nozzle and gas tank or conditioner bottle opening.**
- **Avoid contact with skin; wash off spillage with soap and water.**

Using Stabilizer/Conditioner

Use a fuel stabilizer/conditioner in the machine to provide the following benefits:

- Keeps gasoline fresh during storage of 90 days or less. For longer storage it is recommended that the fuel tank be drained.
- Cleans the engine while it runs
- Eliminates gum-like varnish buildup in the fuel system, which causes hard starting

  Important: **Do not use fuel additives containing methanol or ethanol.**

  Add the correct amount of gas stabilizer/conditioner to the gas.

  Note: A fuel stabilizer/conditioner is most effective when mixed with fresh gasoline. To minimize the chance of varnish deposits in the fuel system, use fuel stabilizer at all times.

Filling the Fuel Tank

Note: Ensure that the engine is shut off and the motion controls are in the parked position.

Note: You can use the fuel window to verify the presence of gasoline before filling the tank (Figure 7).

Important: **Do not overfill fuel tank. Fill the fuel tank to the bottom of the filler neck. The empty space in the tank allows the fuel to expand. Overfilling may result in fuel leakage, damage to the engine, or damage to the emissions system.**

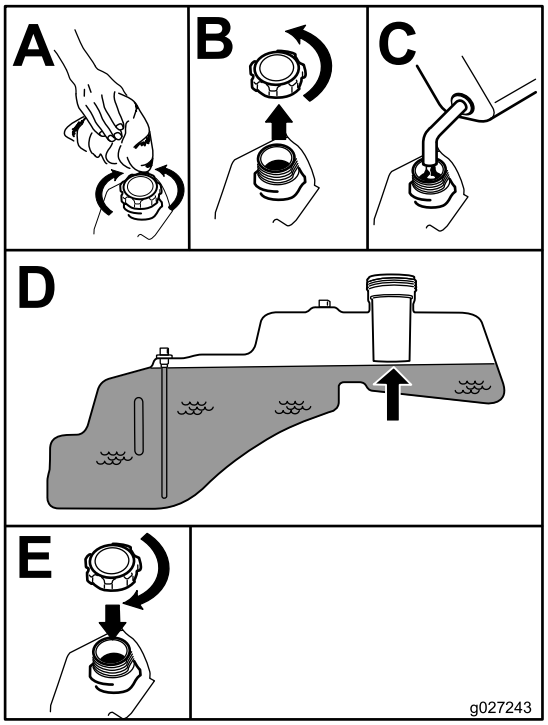

g027243

Figure 7

Checking the Engine-Oil Level

Before you start the engine and use the machine, check the oil level in the engine crankcase; refer to Checking the Engine-Oil Level (page 36).

Breaking in a New Machine

New engines take time to develop full power. Mower decks and drive systems have higher friction when

new, placing additional load on the engine. Allow 40 to 50 hours of break-in time for new machines to develop full power and best performance.

Think Safety First

Please read all safety instructions and symbols in the safety section. Knowing this information could help you or bystanders avoid injury.

⚠ DANGER

Operating the machine on wet grass or steep slopes can cause sliding and loss of control.

- **Do not operate on slopes greater than 15 degrees.**
- **Reduce speed and use extreme caution on slopes.**
- **Do not operate the machine near water.**

⚠ DANGER

Wheels dropping over edges can cause rollovers, which may result in serious injury, death, or drowning.

Do not operate the machine near drop-offs.

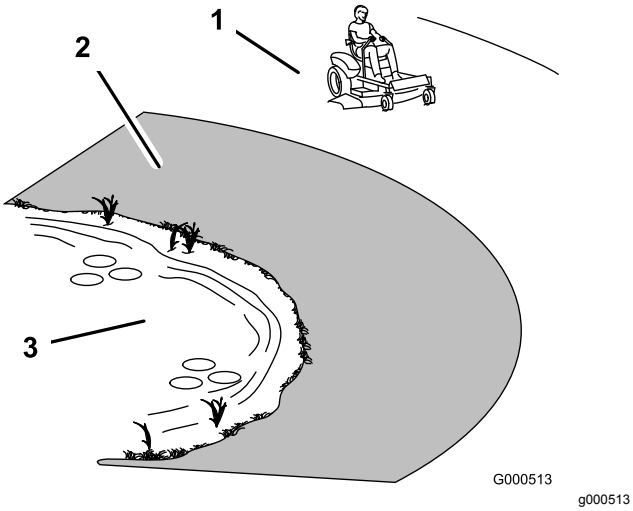

Figure 8

1. Safe zone—use the machine here.
2. Use a walk-behind mower and/or hand trimmer near drop-offs and water.
3. Water

⚠ CAUTION

This machine produces sound levels in excess of 85 dBA at the operator's ear and can cause hearing loss through extended periods of exposure.

Wear hearing protection when operating this machine.

The use of protective equipment for eyes, ears, hands, feet, and head is recommended.

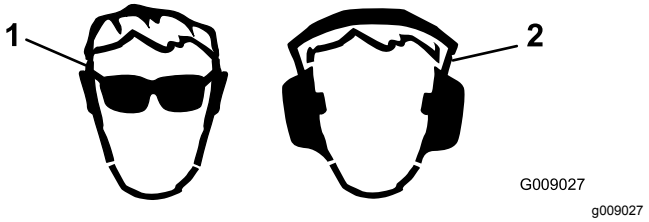

Figure 9

1. Wear eye protection.
2. Wear hearing protection.

Understanding the Safety-Interlock System

⚠ WARNING

If the safety-interlock switches are disconnected or damaged, the machine could operate unexpectedly, causing personal injury.

- **Do not tamper with the interlock switches.**
- **Check the operation of the interlock switches daily and replace any damaged switches before operating the machine.**

The safety-interlock system is designed to prevent the engine from starting unless:

- The blades are disengaged.
- The motion-control levers are in the PARK position.

The safety-interlock system also is designed to shut off the engine whenever the control levers are out of the PARK position and you rise from the seat.

Testing the Safety-Interlock System

Test the safety-interlock system before you use the machine each time. If the safety system does not operate as described below, have an Authorized Service Dealer repair the safety system immediately.

1. While sitting on the seat, with the control levers in the PARK position, and move the blade-control switch to the ON position. Try starting the engine; the engine should not crank.
2. While sitting on the seat, move the blade-control switch to the OFF position. Move either motion control lever to the center, unlocked position. Try starting the engine; the engine should not crank. Repeat with the other motion-control lever.
3. While sitting on the seat, move the blade control switch to the OFF position, and lock the motion-control levers in the PARK position. Start the engine. While the engine is running, engage the blade-control switch, and rise slightly from the seat; the engine should stop.
4. While sitting on the seat, move the blade-control switch to the OFF position, and lock the motion-control levers in the PARK position. Start the engine. While the engine is running, move the motion-control levers to the center, unlocked position, engage the blade-control switch, and rise slightly from the seat; the engine should stop.

Starting the Engine

Note: A warm or hot engine may not require choking (Figure 10).

Important: **Do not engage the starter for more than 10 seconds at a time. If the engine fails to start, allow a 60-second cool-down period between attempts. Failure to follow these instructions can damage the starter motor.**

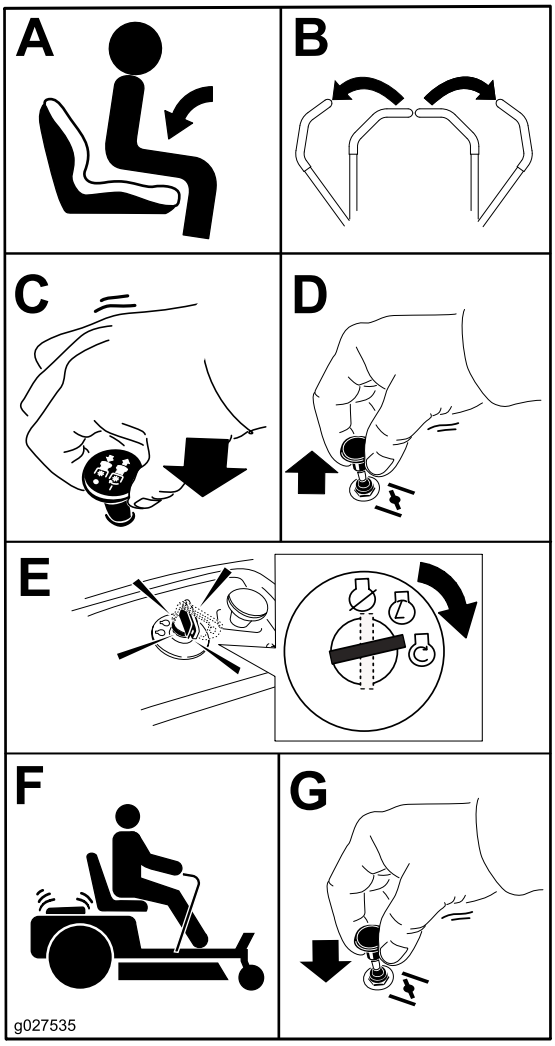

g027580

Figure 10

Operating the Blades

The blade-control switch engages and disengages power to the mower blades. This switch controls power to any attachments that draw power from the engine, including the mower deck and cutting blades.

Engaging the Blades

Important: **Do not engage the blades when parked in tall grass; belt or clutch damage can occur.**

Note: Always engage the blades with the throttle in the FAST position (Figure 11).

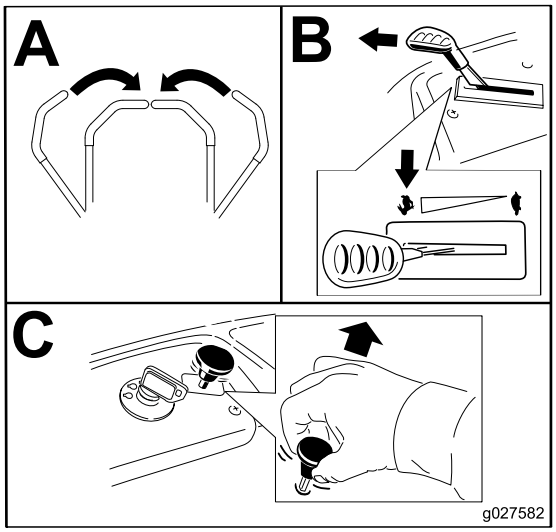

g027582

Figure 11

Disengaging the Blades

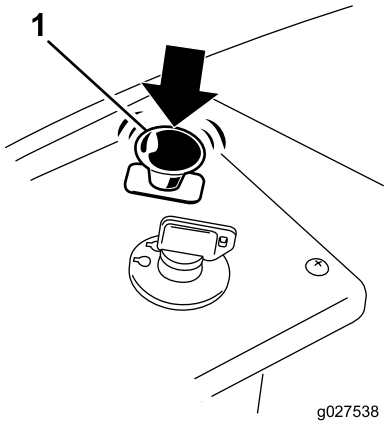

g027538

Figure 12

1. Blade-control switch—Off

Shutting Off the Engine

1. Disengage the blades by pushing the blade-control switch to the OFF position (Figure 11).
2. Move the throttle lever to the FAST position.
3. Turn the ignition key to the OFF position and remove the key.

Driving the Machine

Driving the machine benefits from an understanding of what zero-turn-radius mower means. The drive wheels turn independently, powered by hydraulic motors on each axle; hence 1 side can turn in reverse while the other turns forward, causing the machine to spin rather than turn. This vastly improves the machine maneuverability but may require some adjustment if you are unfamiliar.

⚠ WARNING

The machine can spin very rapidly. You may lose control of the machine and cause personal injury or damage to the machine.

- **Use caution when making turns.**
- **Slow the machine down before making sharp turns.**

The throttle control regulates the engine speed as measured in rpm (revolutions per minute). Placing the throttle control in the FAST position can be best for performance. For most applications, operate the machine in the full-throttle position.

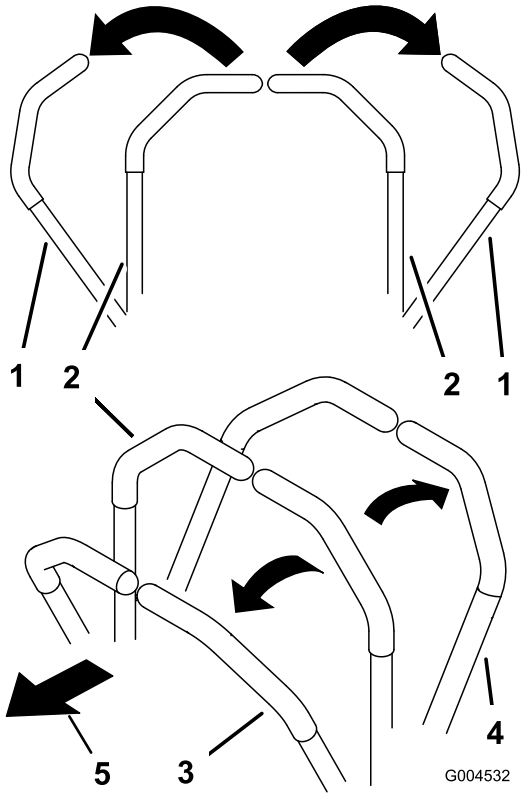

Figure 13

1. PARK position
2. Center, unlock position
3. Forward
4. Backward
5. Front of the machine

Driving Forward

Note: Always use caution when backing up and turning.

1. Move the levers to the center, unlocked position.
2. To go forward, slowly push the motion-control levers forward (Figure 14).

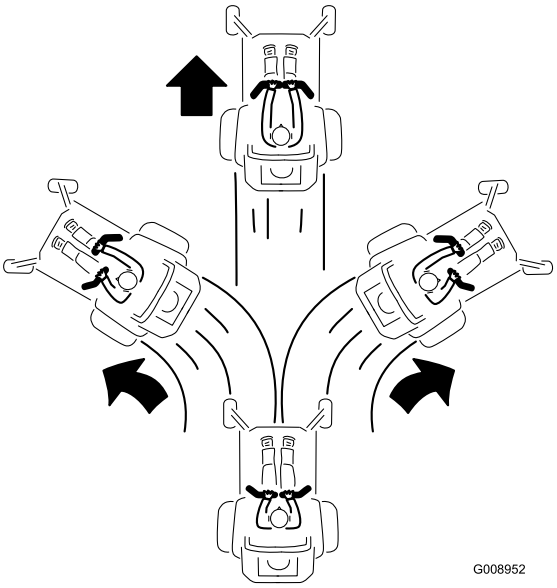

Figure 14

To go straight, apply equal pressure to both motion-control levers (Figure 14).

To turn, release pressure on the motion-control lever toward the direction you want to turn (Figure 14).

The farther you move the motion-control levers in either direction, the faster the machine moves in that direction.

To stop the machine, pull the motion-control levers to the NEUTRAL position.

Driving Backward

Note: Always use caution when backing up and turning.

1. Move the levers to the center, unlocked position.
2. To go backward, look behind you and down, as you slowly pull the motion-control levers rearward (Figure 15).

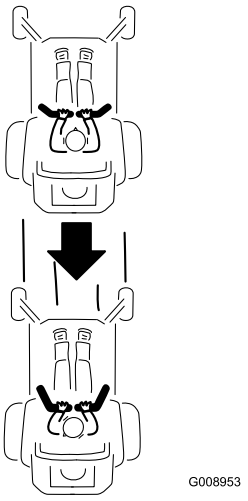

g008953

Figure 15

To go straight, apply equal pressure to both motion-control levers (Figure 15).

To turn, release the pressure on the motion-control lever toward the direction you want to turn.

To stop, push the motion-control levers to the NEUTRAL position.

Using the Smart Speed™ Control System

The Smart Speed ™ Control-System lever, located below the operating position (Figure 16), gives the operator a choice to drive the machine at 3 ground speed ranges—trim, tow, and mow.

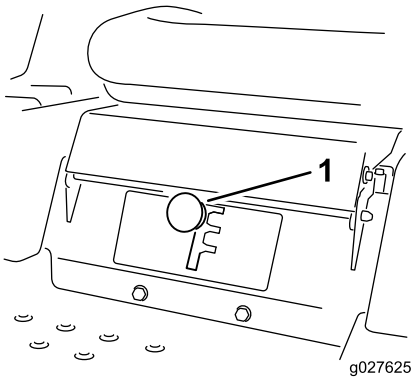

g027625

Figure 16

1. Smart-speed lever

To change speeds, do the following:

1. Move the motion-control levers to the NEUTRAL position and outward to the PARK position.
2. Disengage the blade-control switch.
3. Adjust the lever to the desired position.

The following are only recommendations for use. Adjustments vary by grass type, moisture content, and the height of the grass.

Suggested uses:	Trim	Tow	Mow
Parking	X		
Heavy, wet grass	X		
Training	X		
Bagging		X	
Mulching		X	
Normal mowing			X
Transport			X

Trim

This is the lowest speed. The suggested uses for this speed are as follows:

- Parking
- Heavy, wet grass mowing conditions
- Training

Tow

This is the medium speed. The suggested uses for this speed are as follows:

- Bagging
- Mulching

Mow

This is the fastest speed. The suggested uses for this speed are as follows:

- Normal mowing
- Transporting the machine

Shutting Off the Machine

To shut off the machine, move the motion-control levers to the NEUTRAL position and outward to the PARK position, disengage the blade-control switch, ensure that the throttle is between half and full throttle, and turn the ignition key to off. Remove the key from the ignition switch.

⚠ WARNING

Children or bystanders may be injured if they move or attempt to operate the mower while it is unattended.

Always remove the ignition key and move the motion-control levers outward to the PARK position when leaving the machine unattended, even if just for a few minutes.

Adjusting the Height of Cut

Note: The transport position is the highest height-of-cut position or cutting height at 115 mm (4.5 inches) as shown in Figure 17.

Height of cut is controlled by the lever located to the right of the operating position (Figure 17).

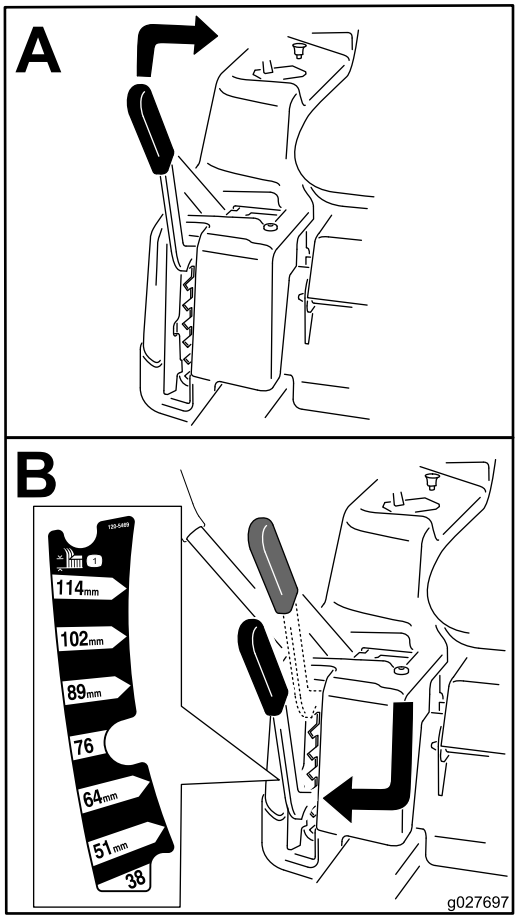

g027697

Figure 17

Adjusting the Anti-Scalp Rollers

For 107 cm (42-inch) Mower Decks

Whenever you change the height of cut, it is recommended to adjust the height of the anti-scalp rollers.

Note: Adjust the anti-scalp rollers so the rollers do not touch the ground in normal, flat mowing areas.

1. Disengage the blade-control switch (PTO), move the motion-control levers to the NEUTRAL-LOCK position, and set the parking brake.
2. Shut off the engine, remove the key, and wait for all moving parts to stop before leaving the operating position.
3. Adjust the anti-scalp rollers to 1 of the following positions:
   - Upper hole—use this position with the mower deck in the 63 mm (2-1/2 inches) and below the height-of-cut positions (Figure 18).
   - Lower hole—use this position with the mower deck in the 76 mm (3 inches) and above the height-of-cut positions (Figure 18).

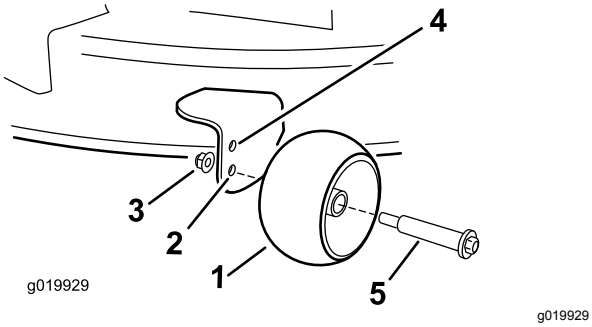

Figure 18

1. Anti-scalp roller
2. Lower hole—the mower deck in the 76mm (3 inches) and above the height-of-cut positions
3. Flange nut
4. Upper hole—the mower deck in the 63mm (2-1/2 inches) and below the height-of-cut positions
5. Bolt

Adjusting the Anti-Scalp Rollers

For 127 cm (50-inch) Mower Decks

Whenever you change the height of cut, it is recommended to adjust the height of the anti-scalp rollers.

Note: Adjust the anti-scalp rollers so the rollers do not touch the ground in normal, flat mowing areas.

1. Disengage the blade-control switch (PTO), move the motion-control levers to the NEUTRAL-LOCK position, and set the parking brake.
2. Shut off the engine, remove the key, and wait for all moving parts to stop before leaving the operating position.
3. Adjust the anti-scalp rollers (Figure 19) to match the closest height-of-cut position.

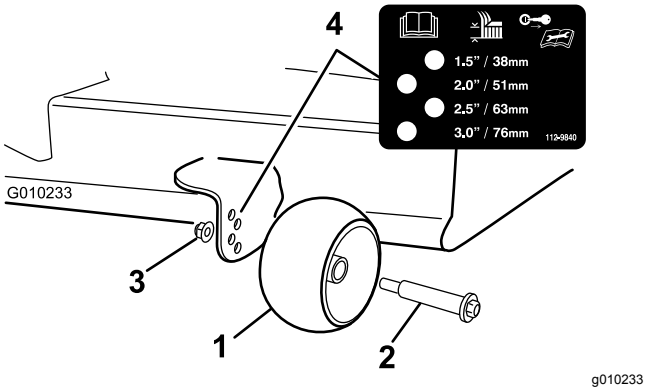

Figure 19

1. Anti-scalp roller
2. Bolt
3. Flange nut
4. Hole spacing

Positioning the Seat

Move the seat forward or backward as shown in Figure 20.

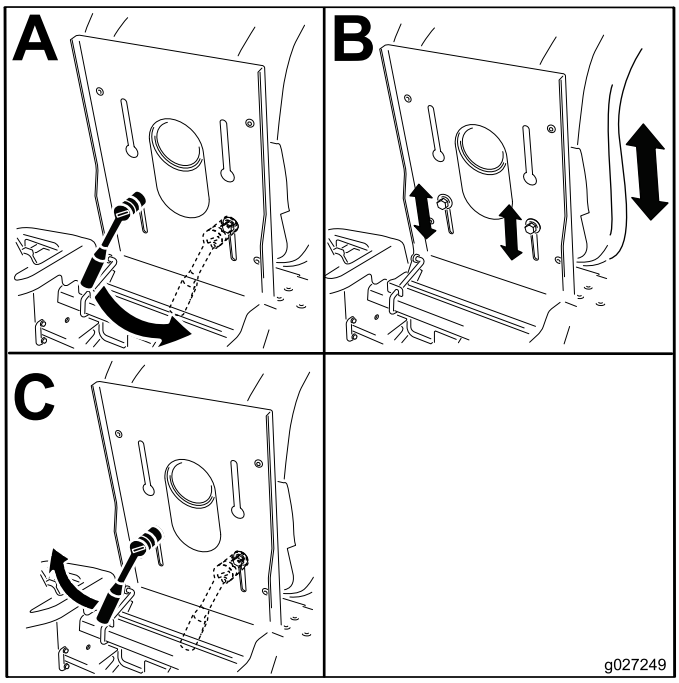

Figure 20

Adjusting the Motion-Control Levers

Adjusting the Height

You can adjust the motion-control levers higher or lower for maximum comfort (Figure 21).

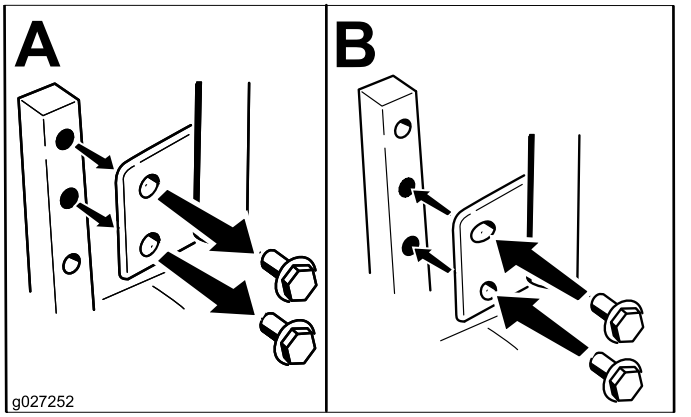

Figure 21

Adjusting the Tilt

You can adjust the motion-control levers forward or rearward for your comfort.

1. Loosen the upper bolt holding the control lever to the control-arm shaft.
2. Loosen the lower bolt just enough to pivot the control lever forward or rearward (Figure 21).
3. Tighten both bolts to secure the control lever in the new position.
4. Repeat the adjustment for the other control lever.

Pushing the Machine by Hand

Important: **Always push the machine by hand. Do not tow the machine, because damage may occur.**

This machine has an electric-brake mechanism, and to push the machine, the ignition key needs to be in the RUN position. The battery needs to be charged and functioning for the electric brake to be disengage.

Pushing the Machine

1. Park the machine on a level surface, and disengage the blade-control switch.
2. Move the motion-control levers outward to the PARK position, shut off the engine, and wait for all moving parts to stop before leaving the operating position.
3. Locate the bypass levers on the frame on both sides of the engine.
4. Move the bypass levers forward through the keyhole and down to lock them in place (Figure 22).

   Note: Do this for each lever.
5. Move the motion-control levers inward to the NEUTRAL position and turn the ignition key to the RUN position.

   Note: Do not start the machine.

   Note: You can now push the machine by hand.

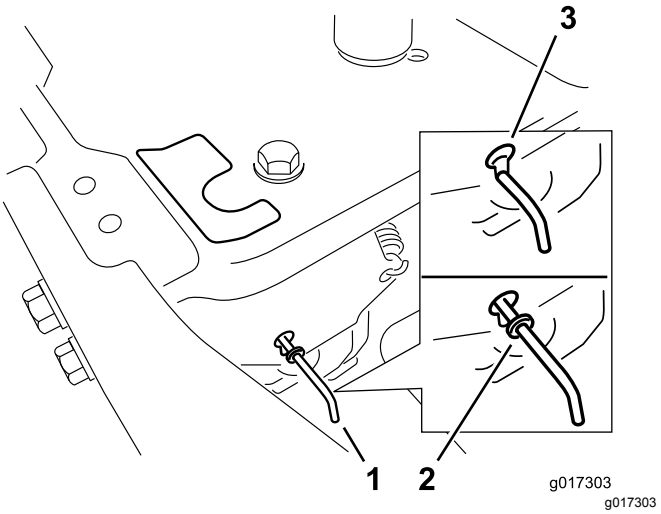

Figure 22

1. Bypass-lever locations
2. Lever position for operating the machine
3. Lever position for pushing the machine

6. When finished, ensure that the key has been returned to the STOP position to avoid draining the battery charge.

Note: If the machine fails to move, the electric brake may still be engaged. If necessary, the electric brake can be released manually; refer to Releasing the Electric Brake (page 44).

Operating the Machine

Move the bypass levers rearward through the keyhole and down to lock them in place as shown in Figure 22.

Note: Do this for each lever.

Converting to Side Discharge

For Models with 107 cm (42-inch) Mower Decks

The mower deck and mower blades shipped with this machine were designed for optimum mulching and side-discharge performance.

Removing the Discharge Cover for the Side Discharge

1. Park the machine on a level surface and disengage the blade-control switch.
2. Move the motion-control levers outward to PARK position, shut off the engine, remove the key, and wait for all moving parts to stop before leaving the operating position.
3. Remove the 2 bolts and nuts that secure the discharge cover to the mower (Figure 23).

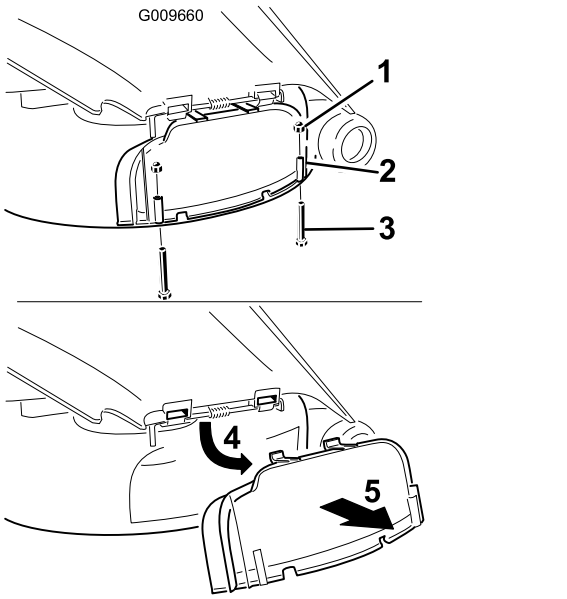

Figure 23

1. Cap nut (1/4 inch)
2. Discharge cover
3. Bolt (1/4 x 2-1/2 inches)
4. Rotate the cover up.
5. Remove the cover.

4. Remove the discharge cover.
5. Lift up the grass deflector and locate the locknut on the deflector-pivot rod.
6. Remove the existing thin nut (3/8 inch).
7. Install the cutoff baffle to the exposed pivot rod (Figure 24).

   Note: Use the existing thin nut (3/8 inch) to secure the baffle to the mower.

Note: The cutoff baffle was shipped with the machine as a loose part.

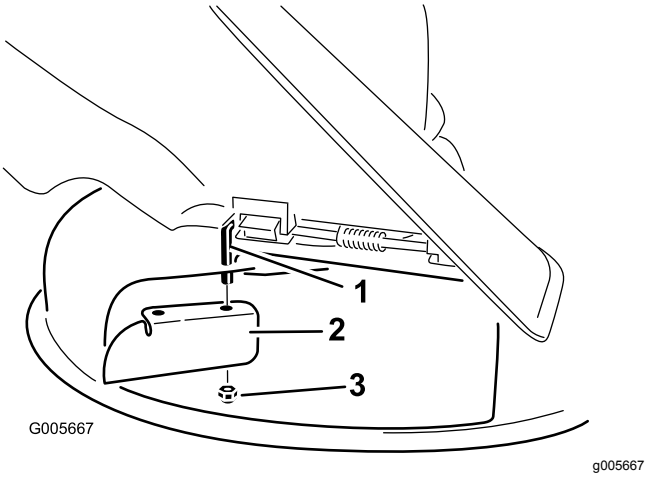

Figure 24

1. Pivot rod
2. Cutoff baffle (originally shipped with the machine)
3. Existing thin nut (3/8 inch)

8. Torque the fastener to 7 to 9 N·m (14 to 18 ft-lb).
9. Lower the grass deflector over the discharge opening.

   Important: **Ensure that the mower has a hinged grass deflector that disperses clippings to the side and down toward the turf, while in side-discharge mode.**

Installing the Discharge Cover for Mulching

1. Park the machine on a level surface and disengage the blade-control switch.
2. Move the motion-control levers outward to the PARK position, shut off the engine, remove the key, and wait for all the moving parts to stop before leaving the operating position.
3. Remove the cutoff baffle from the mower deck (Figure 24).
4. Lift the grass deflector and slide the tabs on top of the discharge cover under the grass deflector retaining rod.
5. Rotate the discharge cover down over the opening, and onto the lower lip of the mower (Figure 25).

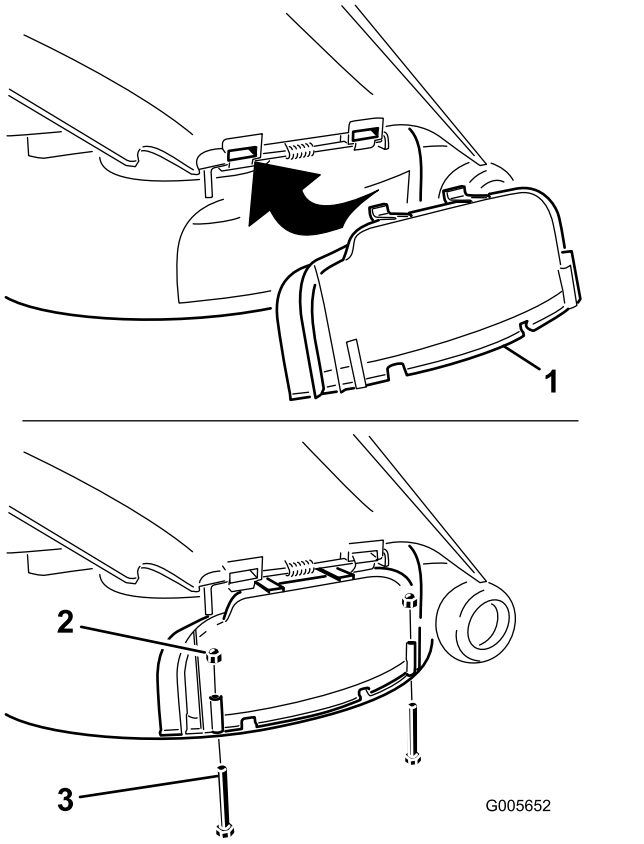

Figure 25

1. Discharge cover
2. Cap nut (1/4 inch)
3. Bolt (1/4 x 2-1/2 inches)

6. Secure the discharge cover to the lower lip of the mower with 2 bolts (1/4 x 2-1/2 inches) and 2 cap nuts (1/4 inch) as shown in Figure 25.

   Note: Do not overtighten the nuts; this could distort the cover and cause blade contact.

Converting to Side Discharge

For Models with 127 cm (50-inch) Mower Decks

The mower deck and mower blades shipped with this machine were designed for optimum mulching and side discharge performance.

Removing the Right Baffle for Side Discharge

1. Park the machine on a level surface and disengage the blade-control switch.
2. Move the motion-control levers outward to the PARK position, shut off the engine, remove the key, and wait for all moving parts to stop before leaving the operating position.
3. Remove the right mower blade; refer to Removing the Blades (page 47).
4. Remove the 2 knobs and curved washers that secure the right baffle to the mower (Figure 26).

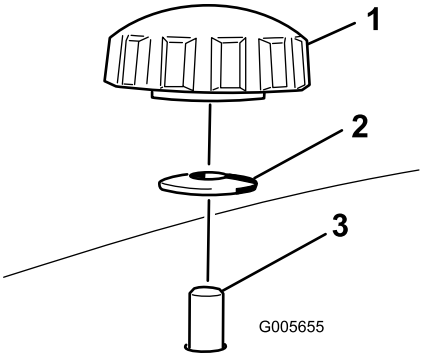

Figure 26

1. Knob
2. Curved washer
3. Baffle stud coming through the mower

5. Remove the right baffle and lower the grass deflector over the discharge opening (Figure 26 and Figure 27).

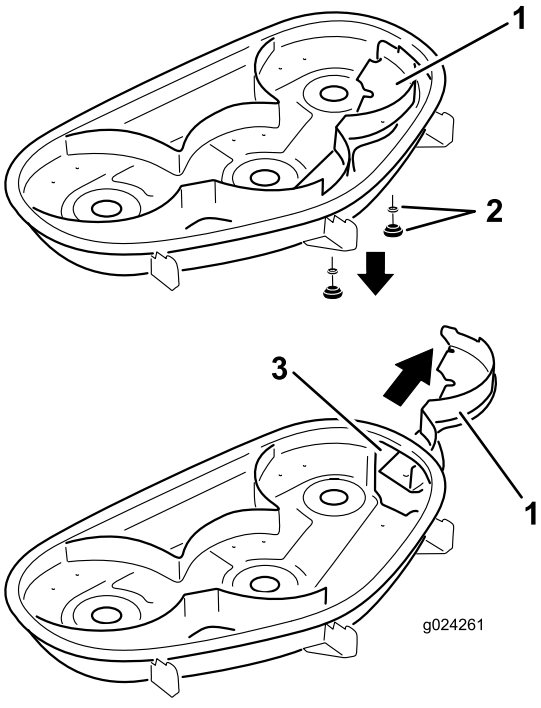

Figure 27

1. Right baffle
2. Curved washer and knob
3. Discharge opening

6. Install the fasteners into the holes in the top of the mower to prevent flying debris.

7. Install the right mower blade; refer to Installing the Blades (page 47).
8. Lift up the grass deflector and install 2 bolts (5/16 x 3/4 inch) into the 2 holes along the deck cutout.
9. Install the cutoff baffle to the mower deck (Figure 28).

   Note: Use the 2 locknuts (5/16 inch) to secure the baffle to the mower deck.

   Note: The cutoff baffle was shipped with the machine as a loose part.

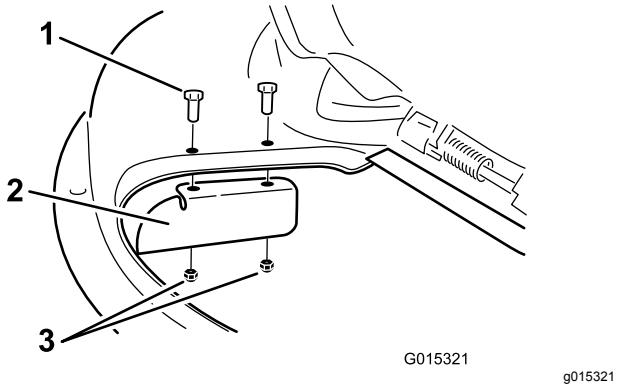

Figure 28

1. Bolt (5/16 x 3/4 inch)
2. Cutoff baffle
3. Locknut (5/16 inch)

10. Torque the fasteners to 7 to 9 N·m (14 to 18 ft-lb).
11. Lower the grass deflector over the discharge opening.

    Important: **Ensure that the mower has a hinged grass deflector that disperses clippings to the side and down toward the turf, while in side-discharge mode.**

Installing the Right Baffle for Mulching

1. Park the machine on a level surface and disengage the blade-control switch.
2. Move the motion-control levers outward to the PARK position, shut off the engine, remove the key, and wait for all moving parts to stop before leaving the operating position.
3. Remove the cutoff baffle from the mower deck (Figure 28).
4. Remove the right mower blade; refer to Removing the Blades (page 47).
5. Slide the right baffle under the mower deck and secure it using 2 knobs and the curved washers (cupped side facing the mower) as shown in Figure 26 and Figure 27.

   Important: **Ensure that the tab on the far right side of the right baffle is outside of the mower and is flush with the mower wall.**
6. Install the right mower blade; refer to Installing the Blades (page 47).

Transporting the Machine

Use a heavy-duty trailer or truck to transport the machine. Ensure that the trailer or truck has all necessary brakes, lighting, and marking as required by law. Please carefully read all the safety instructions. Knowing this information could help you, your family, pets, or bystanders avoid injury.

⚠ WARNING

Driving on the street or roadway without turn signals, lights, reflective markings, or a slow-moving-vehicle emblem is dangerous and can lead to accidents, causing personal injury.

Do not drive the machine on a public street or roadway.

1. If you are using a trailer, connect it to the towing vehicle and connect the safety chains.
2. If applicable, connect the trailer brakes.
3. Load the machine onto the trailer or truck.
4. Shut off the engine, remove the key, set the brake, and close the fuel valve.
5. Tie down the machine near the front caster wheels and the rear bumper (Figure 29).

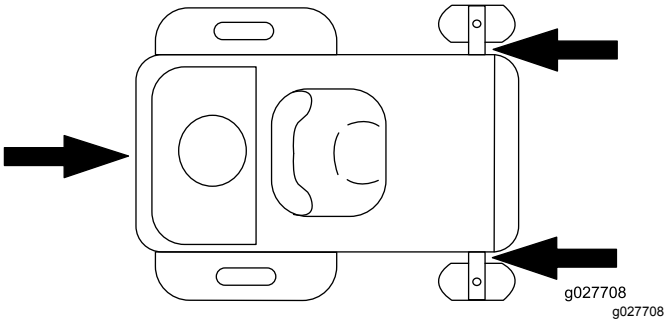

Figure 29

Loading the Machine

Use extreme caution when loading or unloading machines onto a trailer or a truck. Use a full-width ramp that is wider than the machine for this procedure. Back up the ramp and drive forward down the ramp (Figure 30).

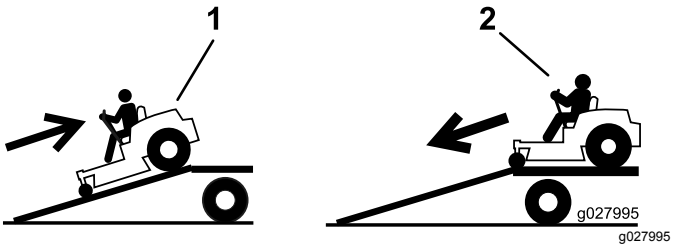

Figure 30

1. Back the machine up the ramp.
2. Drive the machine forward down the ramp.

Important: **Do not use narrow individual ramps for each side of the machine.**

Ensure that the ramp is long enough so that the angle with the ground does not exceed 15 degrees (Figure 31). On flat ground, this requires a ramp to be at least 4 times as long as the height of the trailer or truck bed to the ground. A steeper angle may cause mower components to get caught as the unit moves from the ramp to the trailer or truck. Steeper angles may also cause the machine to tip or lose control. If loading on or near a slope, position the trailer or truck so that it is on the down side of the slope and the ramp extends up the slope. This minimizes the ramp angle.

⚠ WARNING

Loading a machine onto a trailer or truck increases the possibility of tip-over and could cause serious injury or death.

- **Use extreme caution when operating a machine on a ramp.**
- **Use only a full-width ramp; do not use individual ramps for each side of the machine.**
- **Do not exceed a 15-degree angle between the ramp and the ground or between the ramp and the trailer or truck.**
- **Ensure that the length of ramp is at least 4 times as long as the height of the trailer or truck bed to the ground. This ensures that the ramp angle does not exceed 15 degrees on flat ground.**
- **Back up ramps and drive forward down ramps.**
- **Avoid sudden acceleration or deceleration while driving the machine on a ramp as this could cause a loss of control or a tip-over situation.**

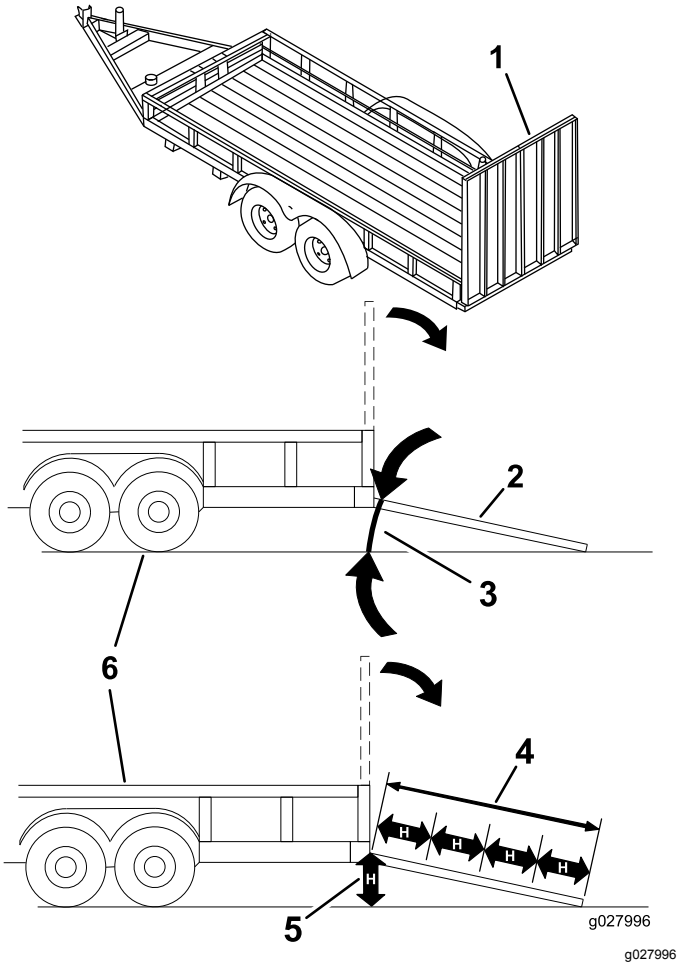

Figure 31

1. Full-width ramp in stowed position
2. Side view of full-width ramp in loading position
3. Not greater than 15 degrees
4. Ramp is at least 4 times as long as the height of the trailer or truck bed to the ground
5. H= height of the trailer or truck bed to the ground
6. Trailer

Operating Tips

Using the Fast Throttle Setting

For best mowing and maximum air circulation, operate the engine at the FAST position. Air is required to thoroughly cut grass clippings, so do not set the height-of-cut so low as to totally surround the mower in uncut grass. Always try to have 1 side of the mower free from uncut grass, which allows air to be drawn into the mower.

Cutting a Lawn for the First Time

Cut grass slightly longer than normal to ensure that the cutting height of the mower does not scalp any uneven ground. However, the cutting height used in the past is generally the best one to use. When cutting grass longer than 15 cm (6 inches) tall, you may want to cut the lawn twice to ensure an acceptable quality of cut.

Cutting a Third of the Grass Blade

It is best to cut only about a third of the grass blade. Cutting more than that is not recommended unless grass is sparse, or it is late fall when grass grows more slowly.

Alternating the Mowing Direction

Alternate the mowing direction to keep the grass standing straight. This also helps disperse clippings which enhances decomposition and fertilization.

Mowing at Correct Intervals

Grass grows at different rates at different times of the year. To maintain the same cutting height, mow more often in early spring. As the grass growth rate slows in mid summer, mow less frequently. If you cannot mow for an extended period, first mow at a high cutting height, then mow again 2 days later at a lower height setting.

Using a Slower Cutting Speed

To improve cut quality, use a slower ground speed in certain conditions.

Avoiding Cutting Too Low

When mowing uneven turf, raise the cutting height to avoid scalping the turf.

Stopping

If you must stop the forward motion of the machine while mowing, a clump of grass clippings may drop onto your lawn. To avoid this, move onto a previously cut area with the blades engaged or you can disengage the mower deck while moving forward.

Keeping the Underside of the Mower Clean

Clean clippings and dirt from the underside of the mower after each use. If grass and dirt build up inside the mower, cutting quality will eventually become unsatisfactory.

Maintaining the Blade(s)

Maintain a sharp blade throughout the cutting season because a sharp blade cuts cleanly without tearing or shredding the grass blades. Tearing and shredding turns grass brown at the edges, which slows growth and increases the chance of disease. Check the mower blades after each use for sharpness, and for any wear or damage. File down any nicks and sharpen the blades as necessary. If a blade is damaged or worn, replace it immediately with a genuine Toro replacement blade.

Maintenance

Note: Determine the left and right sides of the machine from the normal operating position.

Recommended Maintenance Schedule(s)

Maintenance Service Interval	Maintenance Procedure
After the first 5 hours	• Change the engine oil.
Before each use or daily	• Check the safety-interlock system. • Check the engine-oil level. • Clean the air intake screen. • Check the cutting blades. • Inspect the grass deflector for damage.
After each use	• Clean the mower-deck housing.
Every 25 hours	• Grease all lubrication points. • Clean the foam element (more often in dusty, dirty conditions). • Check tire pressure. • Check the belts for wear or cracks.
Every 100 hours	• Replace the foam element (more often in dusty, dirty conditions). • Service the paper element (more often in dusty, dirty conditions). • Change the engine oil (more often in dusty, dirty conditions). • Change the oil filter (more often in dusty, dirty conditions). • Check the spark plug(s). • Check the in-line fuel filter.
Every 200 hours	• Replace the paper element (more often in dusty, dirty conditions). • Replace the spark plug(s). • Replace the in-line fuel filter.
Before storage	• Charge the battery and disconnect the battery cables. • Perform all maintenance procedures listed above before storage. • Paint any chipped surfaces.

Important: **Refer to your engine operator's manual for additional maintenance procedures.**

⚠ CAUTION

If you leave the key in the ignition switch, someone could accidently start the engine and seriously injure you or other bystanders.

Remove the key from the ignition and disconnect the wire from the spark plug before you do any maintenance. Set the wire aside so that it does not accidentally contact the spark plug.

Pre-Maintenance Procedures

Raising the Seat

Make sure that the motion-control levers are locked in the PARK position, and lift the seat forward.

The following components can be accessed by raising the seat:

- Serial plate
- Service decal
- Seat-adjustment bolts
- Fuel filter
- Battery and battery cables

Releasing the Mower-Deck Curtain

Loosen the 2 bottom bolts of the curtain to access the top of the mower deck (Figure 32).

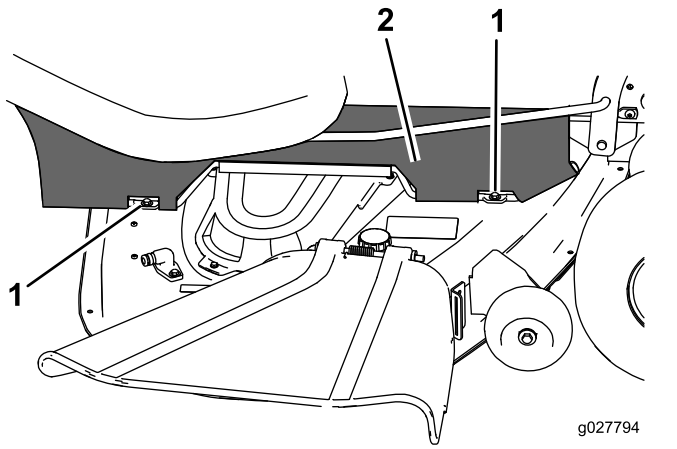

g027794

Figure 32

1. Bottom bolt
2. Curtain

Note: Always tighten the bolts to connect the curtain after maintenance.

Lubrication

Greasing the Bearings

Service Interval: Every 25 hours—Grease all lubrication points.

Grease Type: No. 2 lithium grease

1. Park the machine on a level surface, and disengage the blade-control switch.
2. Move the motion-control levers outward to the PARK position, shut off the engine, remove the key, and wait for all moving parts to stop before leaving the operating position.
3. Clean the grease fittings (Figure 33 and Figure 34) with a rag.

   Note: Make sure to scrape any paint off the front of the fitting(s).

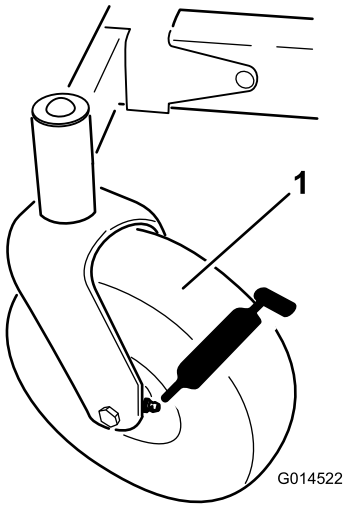

g014522

Figure 33

1. Front caster tire

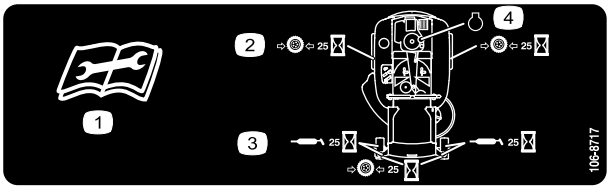

decal106-8717

Figure 34

Located on the seat-pan underside

1. Read the instructions before servicing or performing maintenance
2. Check the tire pressure every 25 operating hours
3. Grease every 25 operating hours
4. Engine

4. Connect a grease gun to each fitting and pump grease into the fittings until grease begins to

ooze out of the bearings (Figure 33 and Figure 34).

Engine Maintenance

Servicing the Air Cleaner

Note: Service the air cleaner more frequently (every few hours) if operating conditions are extremely dusty or sandy.

Removing the Elements

1. Park the machine on a level surface and disengage the blade-control switch (PTO).
2. Engage the parking brake, shut off the engine, remove the key, and wait for all moving parts to stop before leaving the operating position.
3. Clean around the air-cleaner cover to prevent dirt from getting into the engine and causing damage.
4. Lift the cover and rotate the air-cleaner assembly out of the engine (Figure 35).

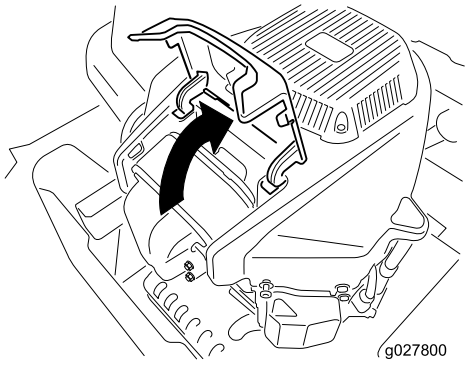

g027800

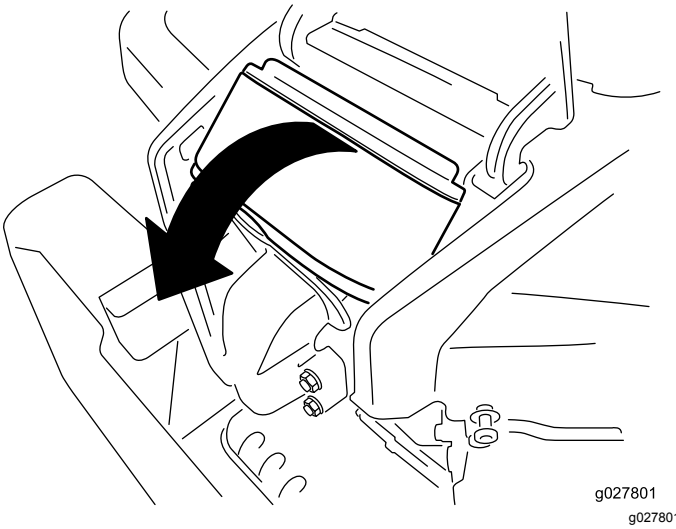

g027801

Figure 35

5. Remove the foam element from the paper element (Figure 36).

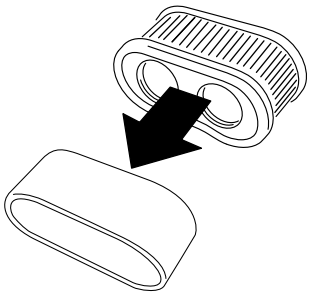

g027802

Figure 36

Servicing the Foam Element

Service Interval: Every 25 hours/Monthly (whichever comes first)—Clean the foam element (more often in dusty, dirty conditions).

Every 100 hours/Yearly (whichever comes first)—Replace the foam element (more often in dusty, dirty conditions).

Wash the foam element with water and replace the foam element if it is damaged.

Servicing the Paper Element

Service Interval: Every 100 hours/Yearly (whichever comes first)—Service the paper element (more often in dusty, dirty conditions).

Every 200 hours/Every 2 years (whichever comes first)—Replace the paper element (more often in dusty, dirty conditions).

1. Lightly tap the element on a flat surface to remove dust and dirt.
2. Inspect the element for tears, an oily film, and damage to the seal.

   Important: **Do not clean the paper element with pressurized air or liquids, such as solvent, gas, or kerosene. Replace the paper element if it is damaged or cannot be cleaned thoroughly.**

Servicing the Engine Oil

Oil Type: Detergent oil (API service SF, SG, SH, SJ, or SL)

Crankcase Capacity: 2.4 L (2.5 US qt)

Viscosity: See the table below.

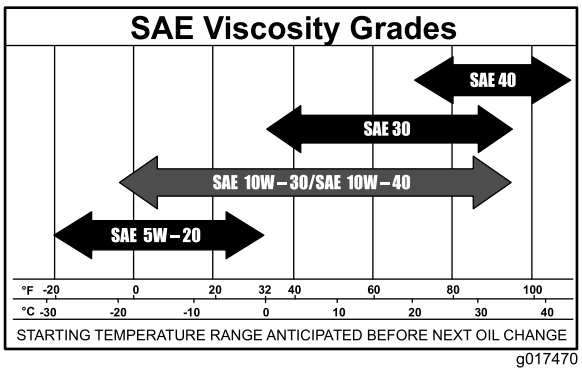

g017470

Figure 37

Checking the Engine-Oil Level

Service Interval: Before each use or daily

Note: Check the oil when the engine is cold.

⚠ WARNING

Contact with hot surfaces may cause personal injury.

Keep hands, feet, face, clothing, and other body parts away the muffler and other hot surfaces.

Important: **Do not overfill the crankcase with oil, because damage to the engine may result. Do not run engine with oil below the Low mark, because the engine may be damaged.**

1. Park the machine on a level surface, disengage the blade-control switch, shut off the engine, engage parking brake, and remove the key.
2. Make sure that the engine is shut off, level, and is cool, so the oil has had time to drain into the sump.
3. To keep dirt, grass clippings, etc., out of the engine, clean the area around the oil-fill cap and dipstick before removing it (Figure 38).
4. Shut off the engine, remove the key, and wait for all moving parts to stop before leaving the operating position.

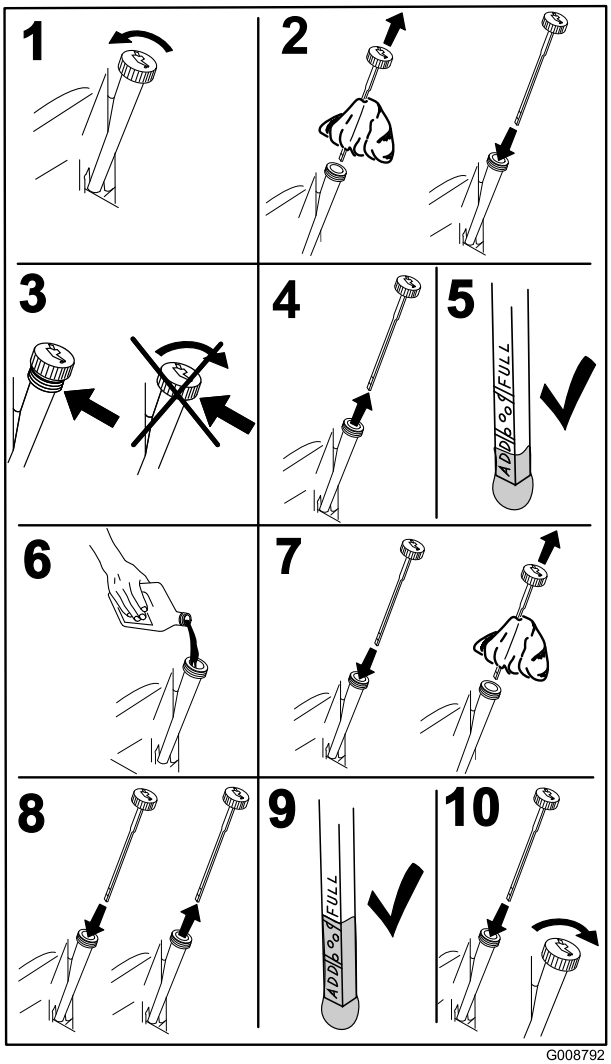

G008792

g008792

Figure 38

Changing the Engine Oil and Oil Filter

Service Interval: After the first 5 hours/After the first month (whichever comes first)—Change the engine oil.

Every 100 hours/Yearly (whichever comes first)—Change the engine oil (more often in dusty, dirty conditions).

Every 100 hours/Yearly (whichever comes first)—Change the oil filter (more often in dusty, dirty conditions).

Note: Change the engine-oil filter more frequently when operating conditions are extremely dusty or sandy.

Note: Dispose of the used oil at a recycling center.

1. Park the machine on a level surface to ensure that the oil drains completely.
2. Disengage the PTO and ensure that the parking brake is engaged.
3. Shut off the engine, remove the key, and wait for all moving parts to stop before leaving the operating position.

4. Drain the engine oil.

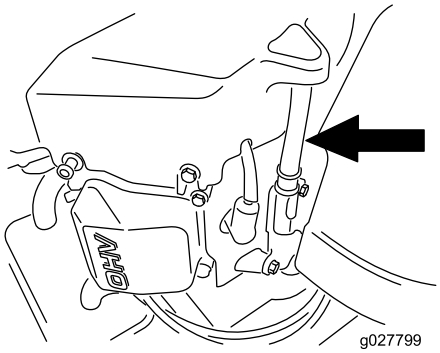

g027799

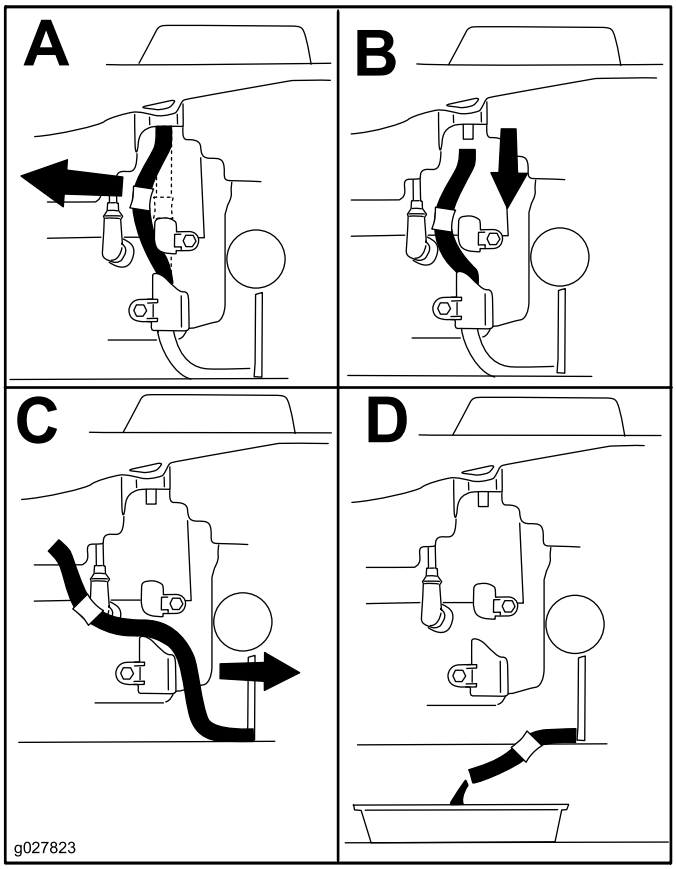

g027823

Figure 39

5. Change the engine-oil filter (Figure 40).

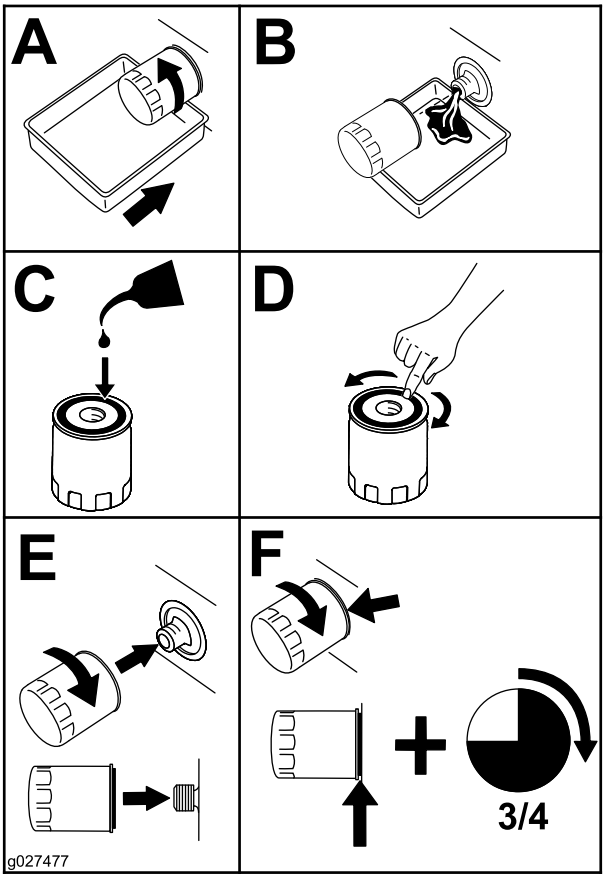

g027477

Figure 40

Note: Ensure that the oil-filter gasket touches the engine and then turn the filter an extra 3/4 turn.

6. Slowly pour approximately 80% of the specified oil into the filler tube and slowly add the additional oil to bring it to the **Full** mark (Figure 41).

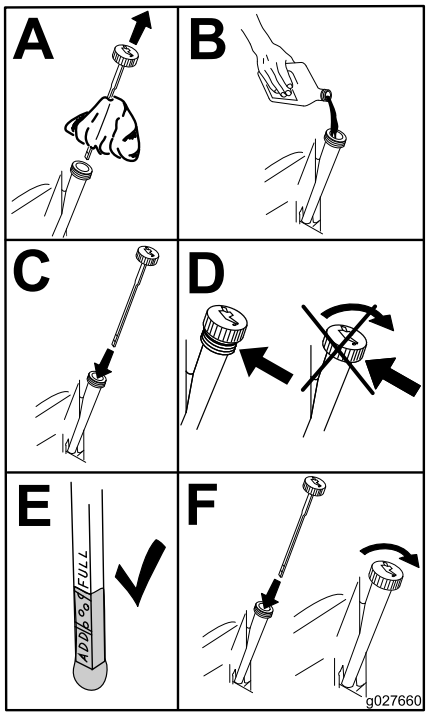

g027660

Figure 41

Servicing the Spark Plug

Service Interval: Every 100 hours/Yearly (whichever comes first)—Check the spark plug(s).

Every 200 hours/Every 2 years (whichever comes first)—Replace the spark plug(s).

Make sure that the air gap between the center and side electrodes is correct before installing the spark plug. Use a spark-plug wrench for removing and installing the spark plug(s) and a gapping tool/feeler gauge to check and adjust the air gap. Install a new spark plug(s) if necessary.

Type: Champion® RN9YC or NGK® BPR6ES

Air gap: 0.76 mm (0.03 inch)

Removing the Spark Plug

1. Disengage the PTO and ensure that the parking brake is engaged.
2. Shut off the engine, remove the key, and wait for all moving parts to stop before leaving the operating position.

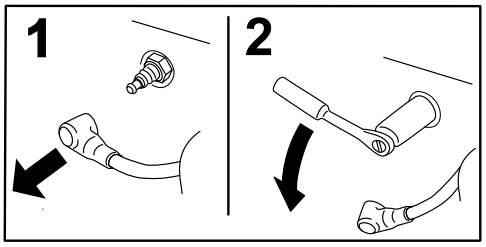

g008791

Figure 42

Note: Due to the deep recess around the spark plug, blowing out the cavity with compressed air is the most effective method for cleaning. The spark plug is most accessible when the blower housing is removed for cleaning.

Checking the Spark Plug

Important: **Do not clean the spark plug(s). Always replace the spark plug(s) when it has: a black coating, worn electrodes, an oily film, or cracks.**

If you see light brown or gray on the insulator, the engine is operating properly. A black coating on the insulator usually means the air cleaner is dirty.

Set the gap to 0.76 mm (0.030 inch).

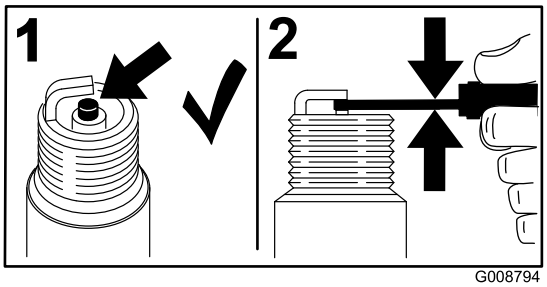

g008794

Figure 43

Installing the Spark Plug

Tighten the spark plug(s) to 25 to 30 N·m (18.5 to 22.1 ft-lb).

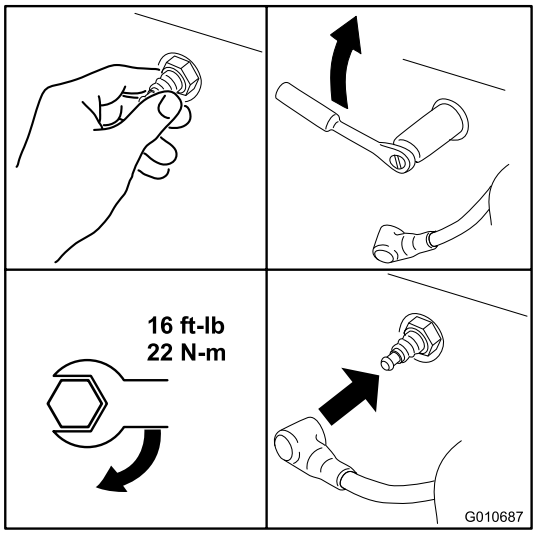

g010687

Figure 44

Cleaning the Cooling System

Clean the air intake screen from grass and debris before each use.

1. Disengage the blade-control switch and apply the parking brake.
2. Shut off the engine, remove the key, and wait for all moving parts to stop before leaving the operating position.
3. Remove the air filter from the engine.
4. Remove the engine shroud.
5. To prevent debris entering the air intake, install the air filter to the filter base.
6. Clean debris and grass from the parts.
7. Remove the air filter and install the engine shroud.
8. Install the air filter.

Fuel System Maintenance

⚠ DANGER

In certain conditions, gasoline is extremely flammable and highly explosive. A fire or explosion from gasoline can burn you, others, and can damage property.

- **Perform any fuel-related maintenance when the engine is cold. Do this outdoors in an open area. Wipe up any gasoline that spills.**
- **Never smoke when draining gasoline, and stay away from an open flame or where a spark may ignite the gasoline fumes.**

Replacing the In-Line Fuel Filter

Service Interval: Every 100 hours/Yearly (whichever comes first)—Check the in-line fuel filter.

Every 200 hours/Every 2 years (whichever comes first)—Replace the in-line fuel filter.

Never install a dirty filter if it is removed from the fuel line.

1. Park the machine on a level surface and disengage the blade-control switch.
2. Ensure that the brake is engaged, shut off the engine, remove the key, and wait for all moving parts to stop before leaving the operating position.

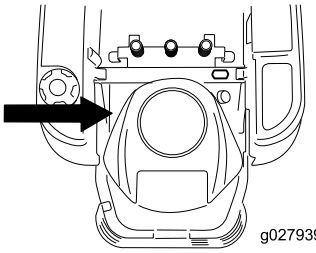

g027939

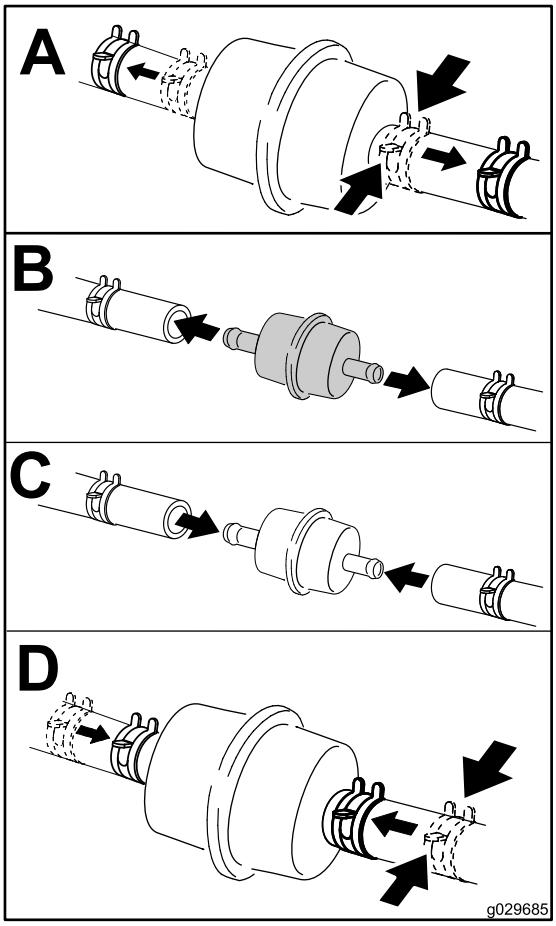

g029685

Figure 45

Electrical System Maintenance

WARNING

CALIFORNIA
Proposition 65 Warning

Battery posts, terminals, and related accessories contain lead and lead compounds, chemicals known to the State of California to cause cancer and reproductive harm. Wash hands after handling.

Charging the Battery

Removing the Battery

⚠ WARNING

Battery terminals or metal tools could short against metal machine components causing sparks. Sparks can cause the battery gasses to explode, resulting in personal injury.

- **When removing or installing the battery, do not allow the battery terminals to touch any metal parts of the machine.**
- **Do not allow metal tools to short between the battery terminals and metal parts of the machine.**

1. Park the machine on a level surface and disengage the blade-control switch.
2. Move the motion-control levers outward to the PARK position, shut off the engine, remove the key, and wait for all moving parts to stop before leaving the operating position.
3. Raise the seat to access the battery.
4. Disconnect the negative (black) ground cable from the battery post (Figure 46).

   Note: Retain all fasteners.

⚠ WARNING

Incorrect battery-cable routing could damage the machine and cables causing sparks. Sparks can cause the battery gasses to explode, resulting in personal injury.

- **Always disconnect the negative (black) battery cable before disconnecting the positive (red) cable.**
- **Always connect the positive (red) battery cable before connecting the negative (black) cable.**

5. Slide the rubber cover up the positive (red) cable.
6. Disconnect the positive (red) cable from the battery post (Figure 46).

   Note: Retain all fasteners.
7. Remove the battery hold-down (Figure 46), and lift the battery from the battery tray.

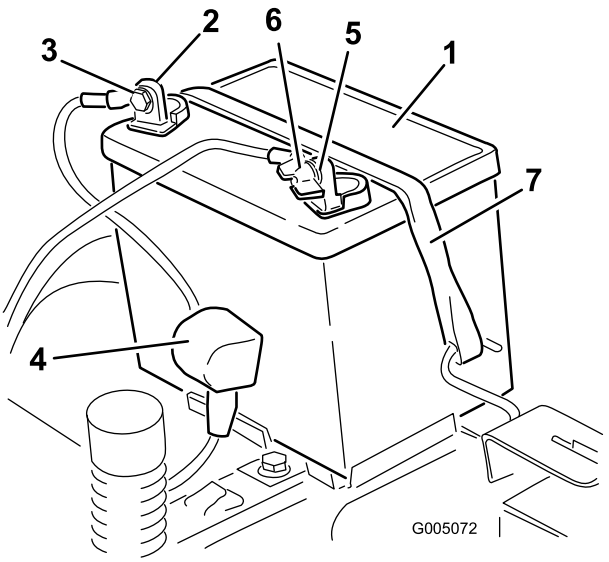

g005072

Figure 46

1. Battery
2. Positive (+) battery post
3. Bolt, washer, and nut
4. Terminal boot
5. Negative (–) battery post
6. Wing nut, washer, and bolt
7. Battery hold-down

Charging the Battery

Service Interval: Before storage—Charge the battery and disconnect the battery cables.

1. Remove the battery from the chassis; refer to Removing the Battery (page 42).
2. Charge the battery for a minimum of 1 hour at 6 to 10 amps.

   Note: Do not overcharge the battery.
3. When the battery is fully charged, unplug the charger from the electrical outlet, then disconnect the charger leads from the battery posts (Figure 47).

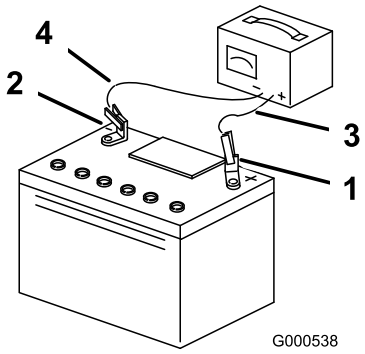

g000538

Figure 47

1. Positive (+) battery post
2. Negative (–) battery post
3. Red (+) charger lead
4. Black (–) charger lead

Installing the Battery

1. Position the battery in the tray (Figure 46).
2. Using the fasteners previously removed, install the positive (red) battery cable to the positive (+) battery terminal.
3. Using the fasteners previously removed, install the negative battery cable to the negative (-) battery terminal.
4. Slide the red terminal boot onto the positive (red) battery post.
5. Secure the battery with the hold-down (Figure 46).
6. Lower the seat.

Servicing the Fuses

The electrical system is protected by fuses. It requires no maintenance; however, if a fuse blows, check the component/circuit for a malfunction or short.

Fuse type:

- Main—F1-30 A, blade-type
- Charge Circuit—F2-25 A, blade-type

1. Remove the screws securing the control panel to the machine.

   Note: Retain all fasteners.
2. Lift the control pane up to access the main wire harness and fuse block (Figure 48).
3. To replace a fuse, pull out on the fuse to remove it (Figure 48).

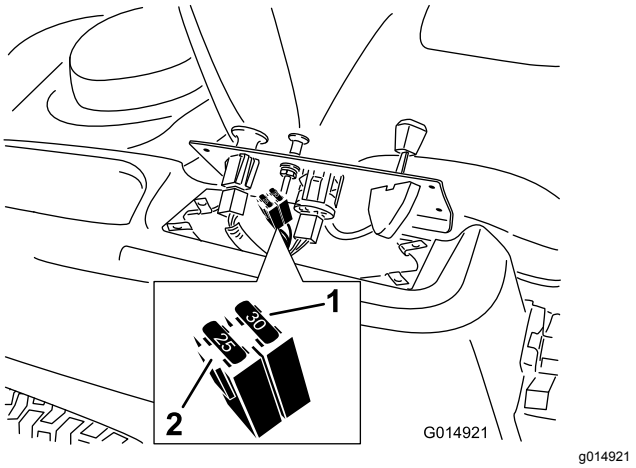

g014921

Figure 48

1. Main—30 A
2. Charge circuit—25 A

4. Return the control panel to its original position.

   Note: Use the screws removed previously to secure the panel to the machine.

Drive System Maintenance

Checking the Tire Pressure

Service Interval: Every 25 hours—Check tire pressure.

Maintain the air pressure in the front and rear tires as specified. Uneven tire pressure can cause an uneven cut. Check the pressure at the valve stem (Figure 49). Check the tires when they are cold to get the most accurate pressure reading.

Refer to the maximum pressure suggested by the tire manufacturer on the sidewall of the caster wheel tires.

Inflate the rear drive-wheel tires to 82 kPa (13 psi).

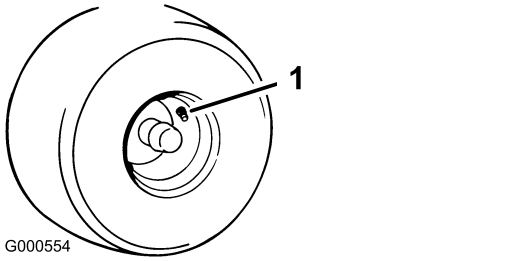

Figure 49

1. Valve stem

Releasing the Electric Brake

The electric brake releases by manually rotating the link arms forward. Once the electric brake is energized, the brake resets.

1. Turn the ignition key to the OFF position or disconnect the battery.
2. Locate the shaft on the electric brake where the brake-link arms are connected (Figure 50).
3. Rotate the shaft forward to release the brake.

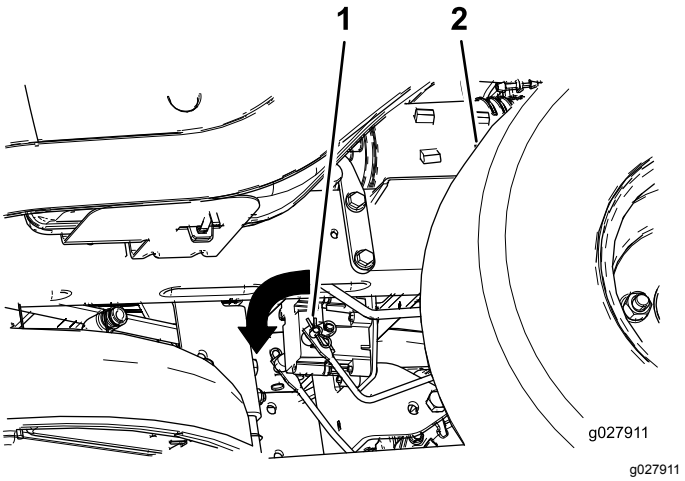

Figure 50

1. Brake-link arm on the electric-brake-control module
2. Left, rear tire

Mower Maintenance

Servicing the Cutting Blades

Maintain sharp blades throughout the cutting season, because sharp blades cut cleanly without tearing or shredding the grass blades. Tearing and shredding turns grass brown at the edges, which slows growth, and increases the chance of disease.

Check the cutter blades daily for sharpness, and for any wear or damage. File down any nicks and sharpen the blades as necessary. If a blade is damaged or worn, replace it immediately with a genuine Toro replacement blade. For convenient sharpening and replacement, you may want to keep extra blades on hand.

⚠ WARNING

A worn or damaged blade can break, and a piece of the blade could be thrown into the operator's or bystander's area, resulting in serious personal injury or death.

- **Inspect the blade periodically for wear or damage.**
- **Replace a worn or damaged blade.**

Before Inspecting or Servicing the Blades

Park the machine on a level surface, disengage the blade-control switch, move the motion-control levers outward to the PARK position, shut off the engine, and remove the key.

Inspecting the Blades

Service Interval: Before each use or daily—Check the cutting blades.

1. Inspect the cutting edges (Figure 51).

   Note: If the edges are not sharp or have nicks, remove and sharpen the blades; refer to Sharpening the Blades (page 47).

2. Inspect the blades, especially the curved area (Figure 51).

   Note: If you notice any damage, wear, or a slot forming in this area (items 3 and 4 in Figure 51), immediately install a new blade.

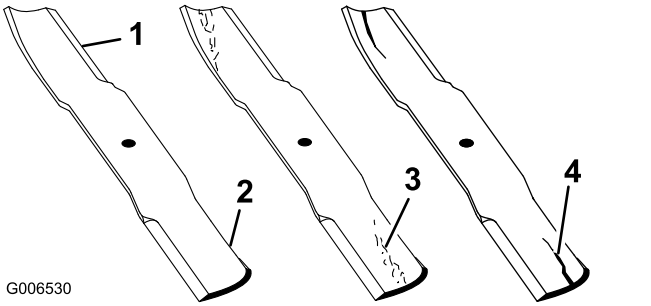

Figure 51

1. Cutting edge
2. Curved area
3. Wear/slot forming
4. Damage

Checking for Bent Blades

Note: The machine must be on a level surface for the following procedure.

1. Raise the mower deck to the highest height-of-cut position.
2. While wearing thickly-padded gloves, or other adequate hand protection, slowly rotate the blade to be measure into a position that allows effective measurement of the distance between the cutting edge and the level surface the machine is on (Figure 52).

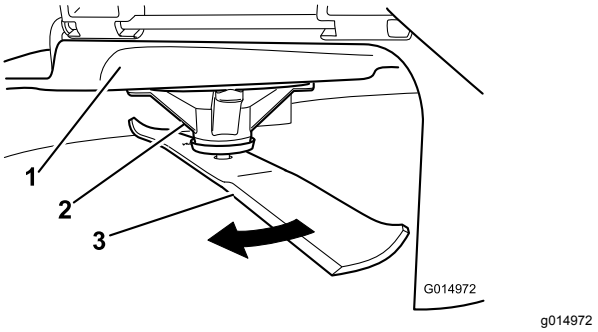

Figure 52

1. Deck
2. Spindle housing
3. Blade

3. Measure from the tip of the blade to the flat surface (Figure 53).

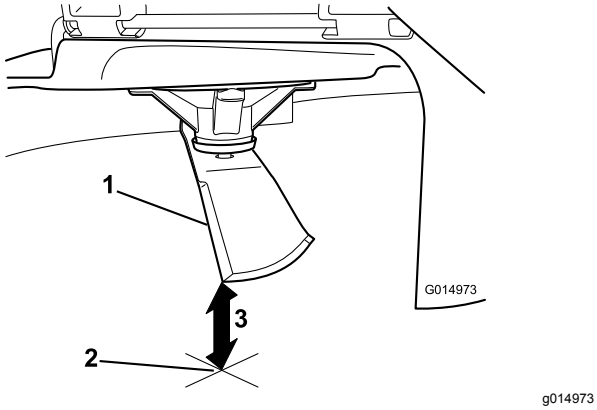

Figure 53

1. Blade (in position for measuring)
2. Level surface
3. Measured distance between blade and the surface (A)

4. Rotate the same blade 180 degrees so that the opposing cutting edge is now in the same position (Figure 54).

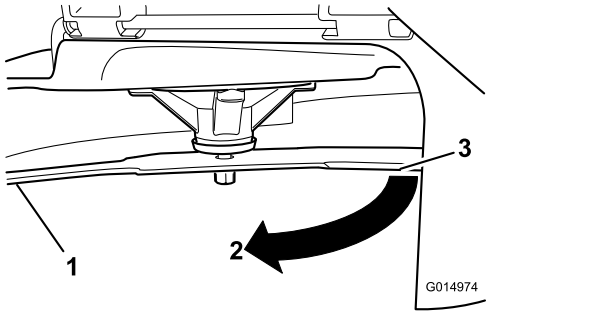

Figure 54

1. Blade (side previously measured)
2. Measurement (position used previously)
3. Opposing side of blade being moved into measurement position

5. Measure from the tip of the blade to the flat surface (Figure 55).

   Note: The variance should be no more than 3 mm (1/8 inch).

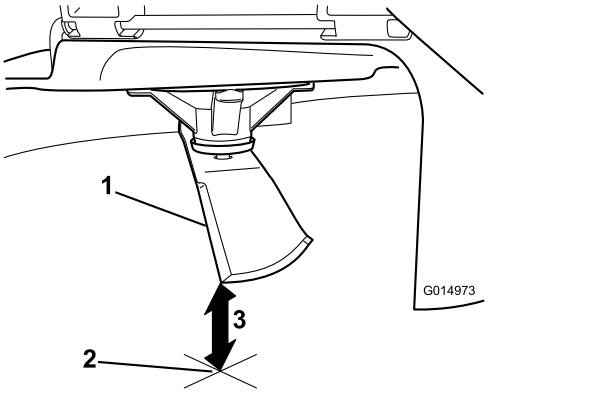

Figure 55

1. Opposite blade edge (in position for measuring)
2. Level surface
3. Second measured distance between blade and surface (B)

   A. If the difference between A and B is greater than 3 mm (1/8 inch), replace the blade with a new blade; refer to Removing the Blades (page 47) and Installing the Blades (page 47).

      Note: If a bent blade is replaced with a new blade, and the dimension obtained continues to exceed 3mm (1/8 inch), the blade spindle could be bent. Contact an Authorized Toro Dealer for service.

   B. If the variance is within constraints, move to the next blade.

Repeat this procedure on each blade.

Removing the Blades

The blades must be replaced if a solid object is hit, if the blade is out of balance, or if the blade is bent. For best performance and continued safety conformance of the machine, use genuine Toro replacement blades. Replacement blades made by other manufacturers may result in non-conformance with safety standards.

1. Hold the blade end using a rag or thickly-padded glove.
2. Remove the blade bolt, curved washer, and blade from the spindle shaft (Figure 56).

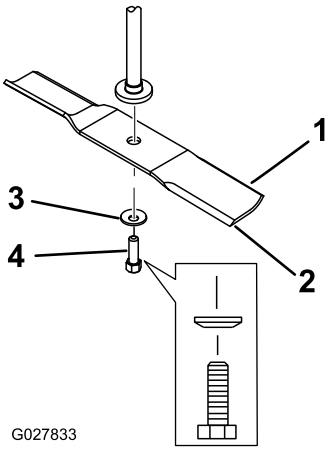

Figure 56

1. Sail area of the blade
2. Blade
3. Curved washer
4. Blade bolt

Sharpening the Blades

1. Use a file to sharpen the cutting edge at both ends of the blade (Figure 57).

   Note: Maintain the original angle.

   Note: The blade retains its balance if the same amount of material is removed from both cutting edges.

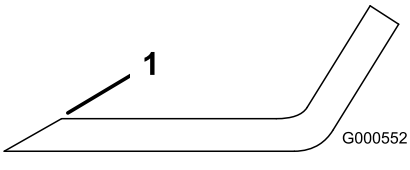

Figure 57

1. Sharpen at original angle.

2. Check the balance of the blade by putting it on a blade balancer (Figure 58).

   Note: If the blade stays in a horizontal position, the blade is balanced, and can be used.

   Note: If the blade is not balanced, file some metal off the end of the sail area only (Figure 57).

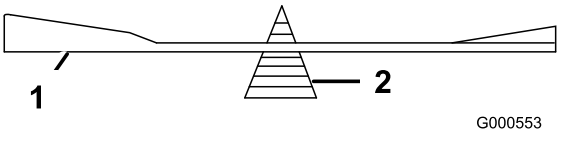

Figure 58

1. Blade
2. Balancer

3. Repeat this procedure until the blade is balanced.

Installing the Blades

1. Install the blade onto the spindle shaft (Figure 56).

   Important: **The curved part of the blade must be pointing upward toward the inside of the mower to ensure proper cutting.**

2. Install the curved washer (cupped side toward the blade) and the blade bolt (Figure 56).
3. Torque the blade bolt to 47 to 88 N·m (35 to 65 ft-lb).

Leveling the Mower Deck

Ensure that the mower deck is level any time you install the mower deck or when you see an uneven cut on your lawn.

Check the mower deck for bent blades prior to leveling; remove and replace any bent blades; refer to the Servicing the Cutting Blades (page 45) before continuing.

Level the mower deck side-to-side before adjusting the front-to-rear slope.

Requirements:

- The machine must be on a level surface.
- All 4 tires must be properly inflated; refer to Checking the Tire Pressure (page 44).

Leveling from Side to Side

1. Park the machine on a level surface and disengage the blade-control switch.
2. Move the motion-control levers outward to the PARK position, shut off the engine, remove the key, and wait for all moving parts to stop before leaving the operating position.
3. Set the height-of-cut lever to middle position.
4. Carefully rotate the blade(s) so that they are all side to side (Figure 59 and Figure 60).

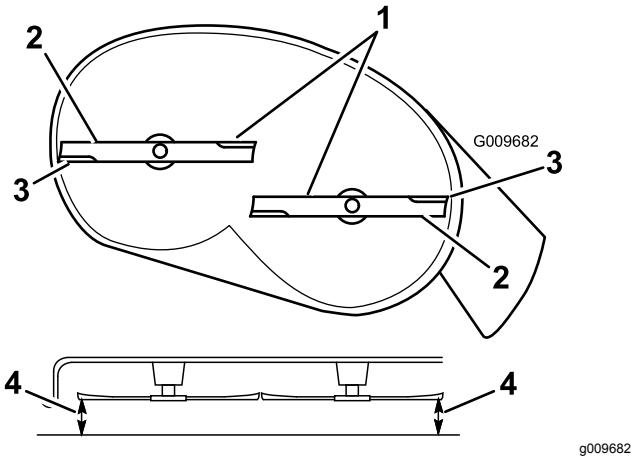

Figure 59

Mower decks with 2 blades

1. Blades side to side
2. Sail area of blade
3. Outside cutting edges
4. Measure from the tip of the blade to the flat surface here.

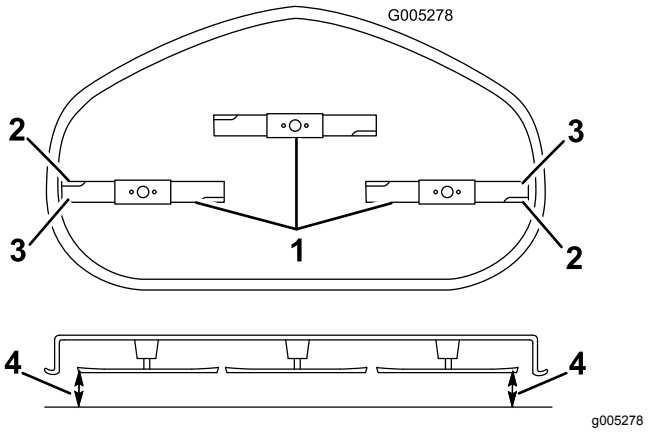

Figure 60

Mower decks with 3 blades

1. Blades side to side
2. Sail area of the blade
3. Outside cutting edges
4. measure from the tip of the blade to the flat surface here.

5. Measure between the outside cutting edges and the flat surface (Figure 59).

   Note: If both measurements are not within 5 mm (3/16 inch), an adjustment is required; continue with this procedure.
6. Move to the left side of the machine.
7. Loosen the side locking nut.
8. Raise or lower the left side of the mower deck by rotating the rear locking nut. (Figure 61).

   Note: Rotate the rear locking nut clockwise to raise the mower deck; rotate the rear locking nut counter-clockwise to lower the mower deck.

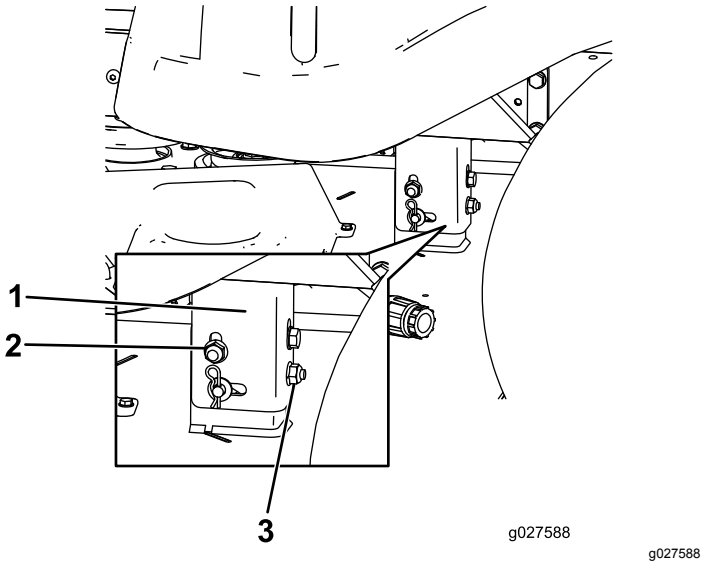

Figure 61

1. Hanger bracket
2. Side locking nut
3. Rear locking nut

9. Check the side-to-side adjustments again. Repeat this procedure until the measurements are correct.
10. Continue leveling the deck by checking the front-to-rear blade slope; refer to Adjusting the Front-to-Rear Blade Slope (page 49).

Adjusting the Front-to-Rear Blade Slope

Check the front-to-rear blade level any time you install the mower. If the front of the mower is more than 7.9 mm (5/16 inch) lower than the rear of the mower, adjust the blade level using the following procedure:

1. Park the machine on a level surface and disengage the blade-control switch.
2. Move the motion-control levers outward to the PARK position, shut off the engine, remove the key, and wait for all moving parts to stop before leaving the operating position.
3. Set the height-of-cut lever to middle position.

   Note: Check and adjust the side-to-side blade level if you have not checked the setting; refer to Leveling from Side to Side (page 48).
4. Carefully rotate the blades so that they are facing front to rear (Figure 62 andFigure 63).

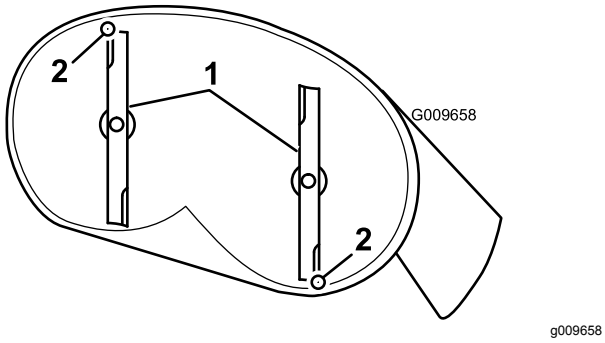

Figure 62

Mower decks with 2 blades

1. Blades front to rear
2. Measure from the tip of the blade to the flat surface here.

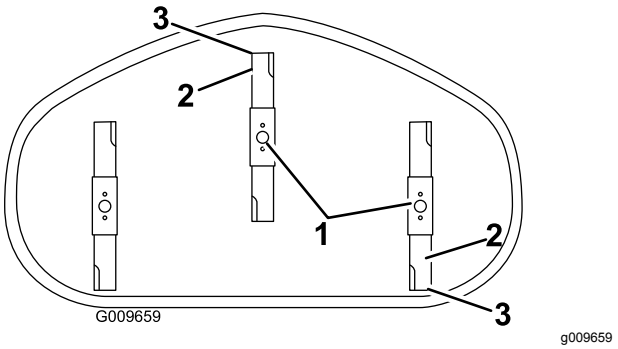

Figure 63

Mower decks with 3 blades

1. Blades front to rear
2. Outside cutting edges
3. Measure from the tip of the blade to the flat surface here.

5. Measure from the tip of the front blade to the flat surface, and the tip of the rear blade to the flat surface (Figure 62).

   Note: If the front blade tip is not 1.6 to 7.9 mm (1/16 to 5/16 inch) lower than the rear blade tip, adjust the front locknut.
6. To adjust the front-to-rear blade slope, rotate the adjustment nut in the front of the mower (Figure 64).

   Note: To raise the front of the mower, tighten the adjustment nut. To lower the front of the mower, loosen the adjustment nut.

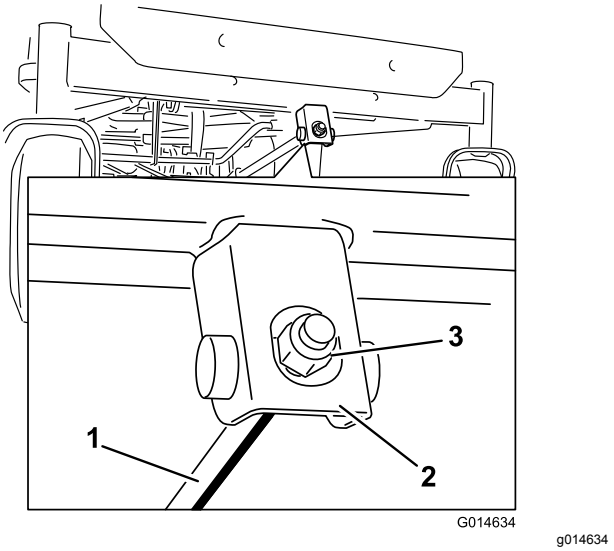

Figure 64

1. Adjusting rod
2. Adjusting block
3. Locknut

7. After adjustment, check the front-to-rear slope again, continue adjusting the nut until the front blade tip is 1.6 to 7.9 mm (1/16 to 5/16 inch) lower than the rear blade tip (Figure 62).

8. When the front-to-rear blade slope is correct, check the side-to-side level of the mower again, refer to Leveling from Side to Side (page 48).

Removing the Mower

1. Park the machine on a level surface and disengage the blade-control switch.
2. Move the motion-control levers outward to the PARK position, shut off the engine, remove the key, and wait for all moving parts to stop before leaving the operating position.
3. Lower the height-of-cut lever to the lowest position.
4. Loosen the bottom 2 bolts holding the mower-deck curtain to the mower deck.; refer to .
5. Remove the hairpin cotter from the front support rod, and remove the rod from the deck bracket (Figure 65).

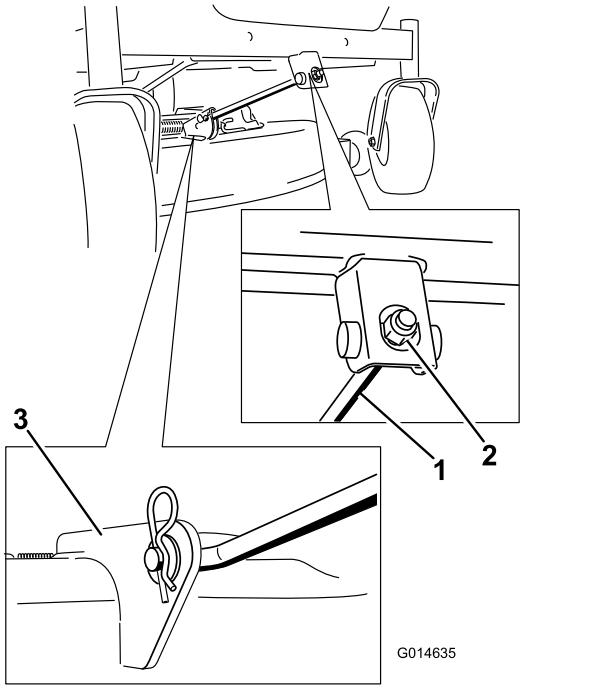

Figure 65

1. Front support rod
2. Locking nut
3. Deck bracket

6. Carefully lower the front of the mower deck to the ground.
7. Lift the mower deck and hanger brackets clear of the rear lift rod and lower the mower carefully to the ground (Figure 66).

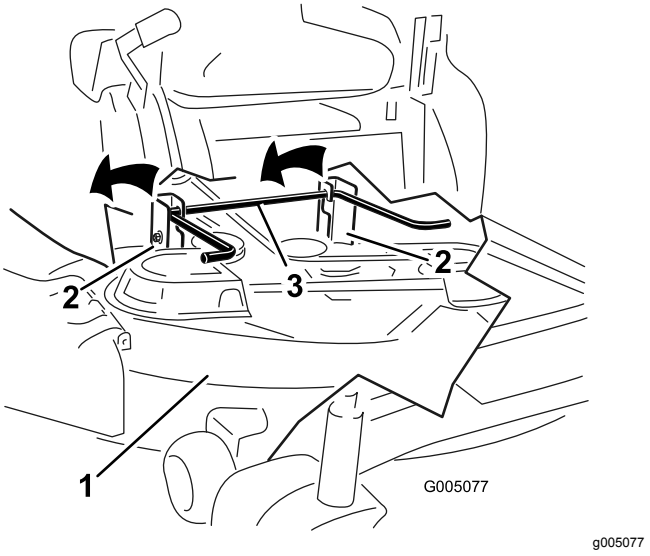

Figure 66

1. Mower deck
2. Hanger bracket
3. Rear lift rod

8. Slide the mower deck rearward to remove the mower belt from the engine pulley.
9. Slide the mower deck out from underneath the machine.

   Note: Retain all parts for future installation.

Installing the Mower

1. Park the machine on a level surface and disengage the blade-control switch.
2. Move the motion-control levers outward to the PARK position, shut off the engine, remove the key, and wait for all moving parts to stop before leaving the operating position.
3. Slide the mower under the machine.
4. Lower the height-of-cut lever to the lowest position.
5. Lift the rear of the mower deck and guide the hanger brackets over the rear lift rod (Figure 66).
6. Attach the front support rod to the mower deck with the clevis pin and hairpin cotter (Figure 65).
7. Install the mower belt onto the engine pulley; refer to Replacing the Mower Belt (page 52).
8. Tighten the bottom 2 bolts holding the mower-deck curtain to the mower deck; refer to Releasing the Mower-Deck Curtain (page 34).

Replacing the Grass Deflector

Service Interval: Before each use or daily—Inspect the grass deflector for damage.

⚠ WARNING

An uncovered discharge opening could allow the lawn mower to throw objects in the operator's or bystander's direction and result in serious injury. Also, contact with the blade could occur. Never operate the machine without the grass deflector, the discharge cover, or the grass-collection system in place.

Never operate the machine without the grass deflector, the discharge cover, or the grass-collection system in place.

Inspect the grass deflector for damage before each use. Replace any damaged parts before use.

1. Remove the nut (3/8 inch) from the rod under the mower (Figure 67).

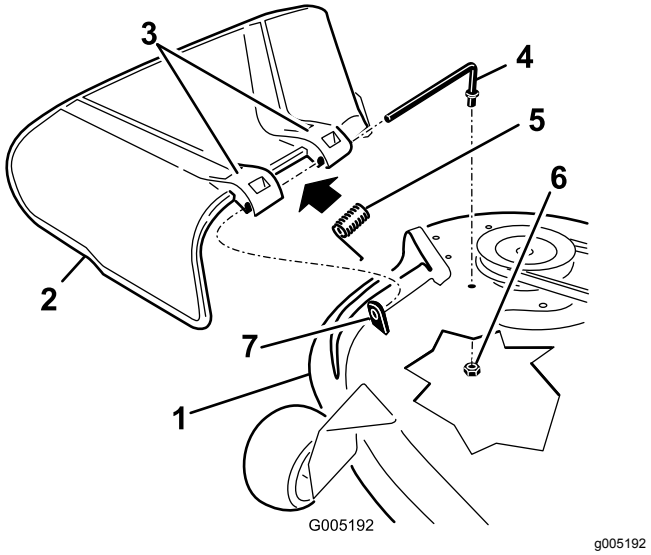

g005192

Figure 67

1. Mower deck
2. Grass deflector
3. Grass-deflector bracket
4. Rod
5. Spring
6. Nut (3/8 inch)
7. Short standoff

2. Slide the rod out of the short standoff, spring, and the grass deflector (Figure 67).
3. Remove the damaged or worn grass deflector.
4. Replace the grass deflector (Figure 67).
5. Slide the rod (straight end), through the rear-grass-deflector bracket.
6. Place the spring on the rod, with the end wires down and between the grass-deflector brackets.
7. Slide rod through the second grass-deflector bracket (Figure 67).
8. Insert the rod at the front of the grass deflector into the short standoff on the deck.
9. Secure the rear end of the rod into the mower with a nut (3/8 inch) as shown in Figure 67.

Important: **The grass deflector must be spring loaded and in the down position. Lift the deflector up to test that it snaps to the fully down position.**

Mower Belt Maintenance

Inspecting the Belts

Service Interval: Every 25 hours—Check the belts for wear or cracks.

Check the belts for cracks, frayed edges, burn marks, or any other damage. Replace damaged belts.

Replacing the Mower Belt

The signs of a worn belt include squealing while the belt is rotating, blades slipping while cutting grass, and frayed edges, burn marks, and cracks on the belt. Replace the mower belt if any of these conditions are evident.

1. Park the machine on a level surface and disengage the blade-control switch.
2. Move the motion-control levers outward to the PARK position, shut off the engine, remove the key, and wait for all moving parts to stop before leaving the operating position.
3. Set the height-of-cut at the lowest cutting position of 38 mm (1-1/2 inches).
4. Remove the pulley covers (Figure 68).

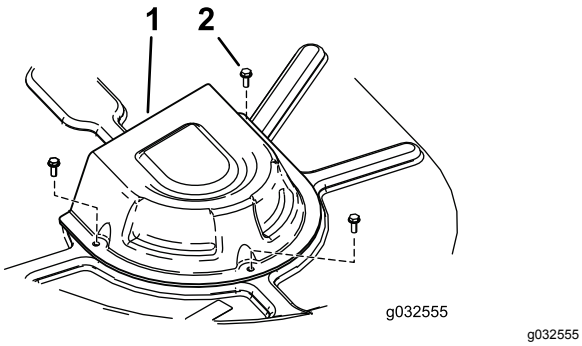

g032555

Figure 68

1. Cover
2. Screw

5. Using a spring-removal tool (Toro Part No. 92-5771), remove the idler spring from the deck hook to remove tension on the idler pulley, and roll the belt off the pulleys (Figure 69).

⚠ WARNING

The spring is under tension when installed and can cause personal injury.

Be careful when removing the belt.

6. Route the new belt around the engine pulley and mower pulleys (Figure 69).
7. Using a spring-removal tool, install the idler spring over the deck hook, and place tension on the idler pulley and mower belt (Figure 69).
8. Install the pulley covers (Figure 68).

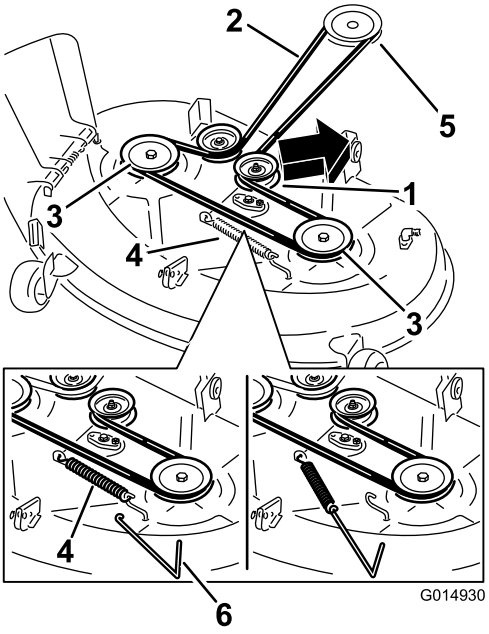

g014930

Figure 69

Mower Decks with 2 Blades

1. Idler pulley
2. Mower belt
3. Outside pulley
4. Spring
5. Engine pulley
6. Spring-removal tool

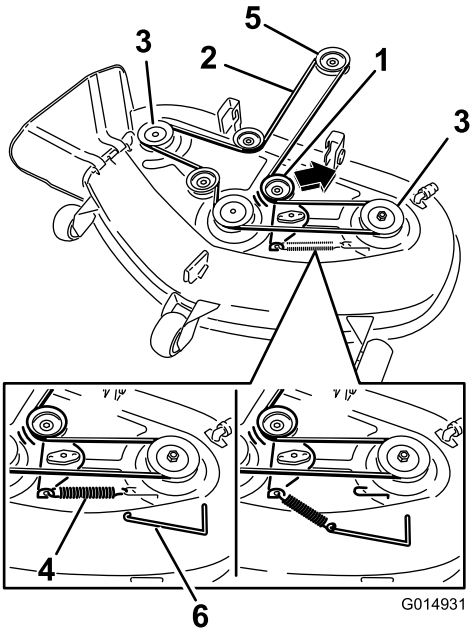

g014931

Figure 70

Mower Decks with 3 Blades

1. Idler pulley
2. Mower belt
3. Outside pulley
4. Spring
5. Engine pulley
6. Spring-removal tool

Cleaning

Washing the Underside of the Mower

Service Interval: After each use—Clean the mower-deck housing.

Wash the underside of the mower after each use to prevent grass buildup for improved mulch action and clipping dispersal.

Important: **You can wash the machine with a mild detergent and water. Do not pressure-wash the machine. Avoid excessive use of water, especially near the control panel, under the seat, around the engine, hydraulic pumps, and motors.**

1. Park the machine on a level surface and disengage the blade-control switch.
2. Move the motion-control levers outward to the PARK position, shut off the engine, remove the key, and wait for all moving parts to stop before leaving the operating position.
3. Attach the hose coupling to the end of the mower washout fitting, and turn the water on high (Figure 71).

   Note: Spread petroleum jelly on the washout fitting O-ring to make the coupling slide on easier and protect the O-ring.

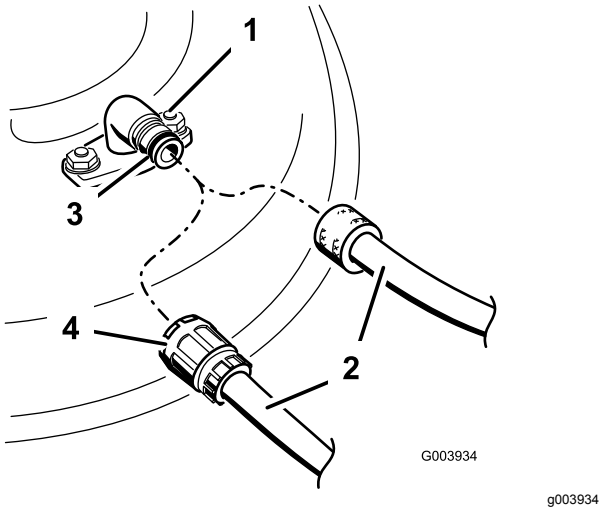

Figure 71

1. Washout fitting
2. Hose
3. O-ring
4. Coupling

4. Lower the mower to the lowest height of cut.
5. Sit on the seat and start the engine.
6. Engage the blade-control switch and let the mower run for 1 to 3 minutes.
7. Disengage the blade-control switch, shut off the engine, remove the ignition key, and wait for all moving parts to stop.
8. Turn the water off and remove the coupling from the washout fitting.

   Note: If the mower is not clean after a washing, soak it and let it stand for 30 minutes. Then, repeat the process.
9. Run the mower again for 1 to 3 minutes to remove excess water.

⚠ WARNING

A broken or missing washout fitting could expose you and others to thrown objects or blade contact. Contact with blade or thrown debris can cause injury or death.

- **Replace broken or missing washout fitting immediately, before using mower again.**
- **Never put your hands or feet under the mower or through openings in the mower.**

Storage

Cleaning and Storage

1. Disengage the blade-control switch, move the motion controls outward to the PARK position, shut off the engine, and remove the key.
2. Remove grass clippings, dirt, and grime from the external parts of the entire machine, especially the engine.
3. Clean dirt and chaff from the outside of the engine cylinder-head fins and blower housing.

   Important: **You can wash the machine with a mild detergent and water. Do not pressure-wash the machine. Avoid excessive use of water, especially near the control panel, under the seat, around the engine, hydraulic pumps, and motors.**
4. Service the air cleaner; refer to Servicing the Air Cleaner (page 35).
5. Grease and oil the machine; refer to Lubrication (page 34).
6. Change the crankcase oil and filter; refer to Changing the Engine Oil and Oil Filter (page 37).
7. Check the tire pressure; refer to Checking the Tire Pressure (page 44).
8. Charge the battery; refer to Charging the Battery (page 43).
9. Check the condition of the blades; refer to Servicing the Cutting Blades (page 45).
10. Prepare the machine for storage when non-use occurs over 30 days. Prepare the machine for storage as follows.
11. Add a petroleum based stabilizer/conditioner to the fuel in the tank. Follow the mixing instructions from the stabilizer manufacturer. Do not use an alcohol based stabilizer (ethanol or methanol).

    Note: A fuel stabilizer/conditioner is most effective when mixed with fresh gasoline and used at all times.

    Run the engine to distribute the conditioned fuel through the fuel system (5 minutes).

    Shut off the engine, allow it to cool, and drain the fuel tank.

    Restart the engine and run it until it stops.

    Choke the engine. Start and run the engine until it does not start.

    Dispose of fuel properly. Recycle pursuant to local codes.

    Important: **Do not store gasoline with stabilizer/conditioner for over 30 days.**
12. Remove the spark plug(s) and check its condition; refer to Servicing the Spark Plug (page 39). With the spark plug(s) removed from the engine, pour 2 tablespoons of engine oil into the spark-plug hole. Use the starter to crank the engine and distribute the oil inside the cylinder. Install the spark plug(s). Do not install the wire on the spark plug(s).
13. Clean any dirt and chaff from the top of the mower.
14. Scrape any heavy buildup of grass and dirt from the underside of the mower, then wash the mower with a garden hose.
15. Check the condition of the drive and mower belts.
16. Check and tighten all bolts, nuts, and screws. Repair or replace any part that is worn or damaged.
17. Paint all scratched or bare metal surfaces. Paint is available from your Authorized Service Dealer.
18. Store the machine in a clean, dry garage or storage area. Remove the key from the ignition switch and keep it in a memorable place. Cover the machine to protect it and keep it clean.

Troubleshooting

Problem	Possible Cause	Corrective Action
The engine overheats.	1. The engine load is excessive. 2. The oil level in the crankcase is low. 3. The cooling fins and air passages under the engine-blower housing are plugged. 4. The air cleaner is dirty. 5. Dirt, water, or stale fuel is in the fuel system.	1. Reduce the ground speed. 2. Add oil to the crankcase. 3. Remove the obstruction from the cooling fins and air passages. 4. Clean or replace the air-cleaner element. 5. Contact an Authorized Service Dealer
The starter does not crank.	1. The blade-control switch is engaged. 2. The motion-control levers are not in the PARK position. 3. The battery is dead. 4. The electrical connections are corroded or loose. 5. A fuse is blown. 6. A relay or switch is damaged.	1. Move the blade-control switch to Disengaged. 2. Move the motion-control levers outward to the PARK position. 3. Charge the battery. 4. Check the electrical connections for good contact. 5. Replace the fuse. 6. Contact an Authorized Service Dealer.
The engine does not start, starts hard, or fails to keep running.	1. The fuel tank is empty. 2. The choke is not on. 3. The air cleaner is dirty. 4. The spark-plug wire(s) is loose or disconnected. 5. The spark plug(s) is pitted, fouled, or the gap is incorrect. 6. There is dirt in fuel filter. 7. Dirt, water, or stale fuel is in fuel system. 8. There is incorrect fuel in the fuel tank. 9. The oil level in the crankcase is low.	1. Fill the fuel tank. 2. Move the choke lever to On. 3. Clean or replace the air-cleaner element. 4. Install the wire(s) on the spark plug. 5. Install a new, correctly gapped spark plug(s). 6. Replace the fuel filter. 7. Contact an Authorized Service Dealer. 8. Drain the tank and replace the fuel with the proper type. 9. Add oil to the crankcase.
The machine does not drive.	1. The bypass valves are open. 2. The traction belts are worn, loose, or broken. 3. The traction belts are off of the pulleys. 4. The transmission has failed.	1. Close the tow valves. 2. Contact an Authorized Service Dealer. 3. Contact an Authorized Service Dealer. 4. Contact an Authorized Service Dealer.
There is an abnormal vibration.	1. The engine-mounting bolts are loose. 2. The engine pulley, idler pulley, or blade pulley is loose. 3. The engine pulley is damaged. 4. The cutting blade(s) is/are bent or unbalanced. 5. A blade-mounting bolt is loose. 6. A blade spindle is bent.	1. Tighten the engine-mounting bolts. 2. Tighten the appropriate pulley. 3. Contact an Authorized Service Dealer. 4. Install a new cutting blade(s). 5. Tighten the blade-mounting bolt. 6. Contact an Authorized Service Dealer.

Problem	Possible Cause	Corrective Action
The cutting height is uneven.	1. The blade(s) is not sharp. 2. A cutting blade(s) is/are bent. 3. The mower is not level. 4. An anti-scalp wheel is not set correctly. 5. The underside of the mower is dirty. 6. The tire pressure is incorrect. 7. A blade spindle is bent.	1. Sharpen the blade(s). 2. Install a new cutting blade(s). 3. Level the mower from side-to-side and front-to-rear. 4. Adjust the anti-scalp wheel height. 5. Clean the underside of the mower. 6. Adjust the tire pressure. 7. Contact an Authorized Service Dealer.
The blades do not rotate.	1. The drive belt is worn, loose or broken. 2. The drive belt is off of the pulley. 3. The Power Take-Off (PTO) switch or PTO clutch is faulty. 4. The mower belt is worn, loose, or broken.	1. Install a new drive belt. 2. Install the drive belt and check the adjusting shafts and belt guides for the correct position. 3. Contact an Authorized Service Dealer. 4. Install a new mower belt.

Schematics

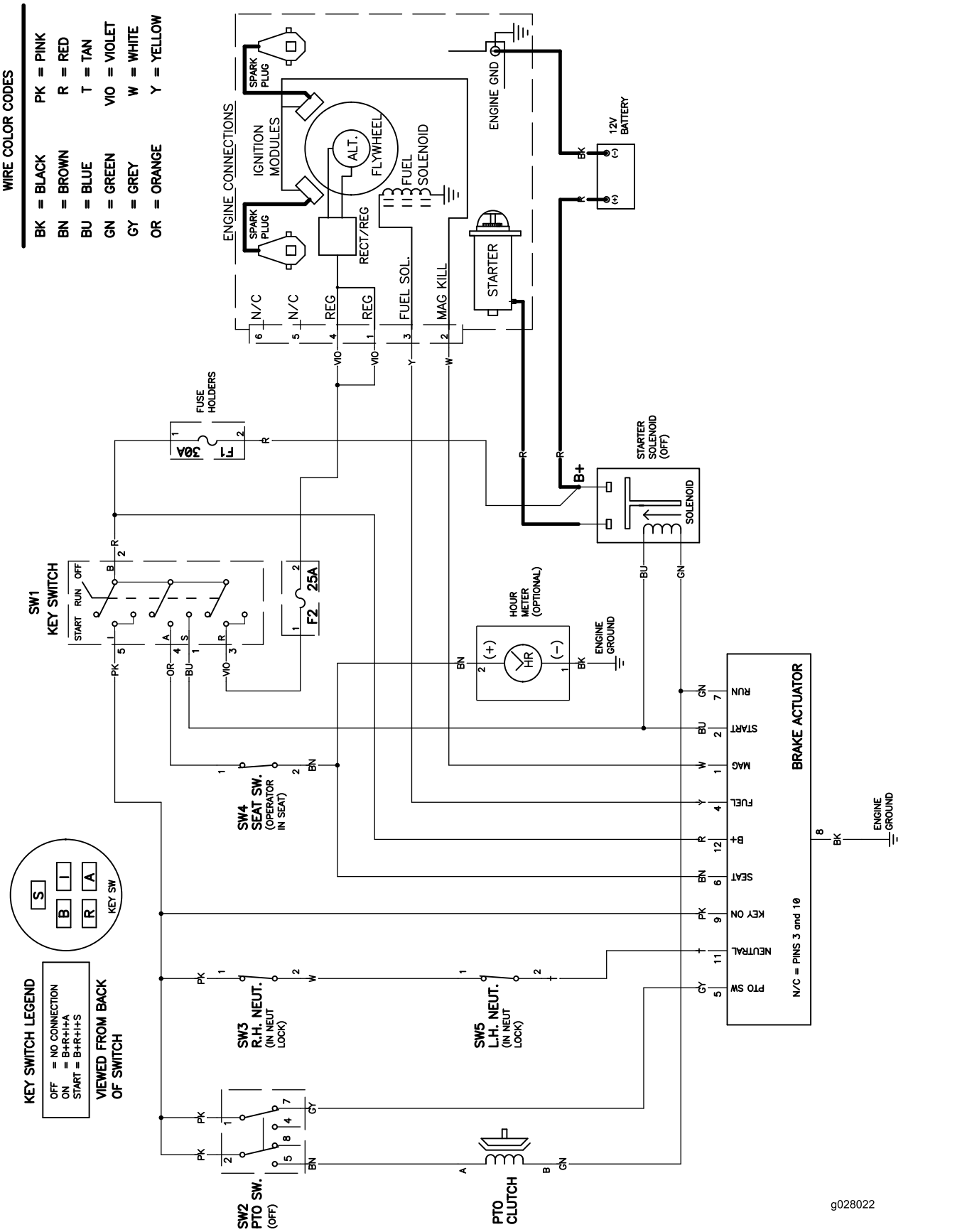

Electrical Diagram (Rev. A)

Notes:

European Privacy Notice

The Information Toro Collects
Toro Warranty Company (Toro) respects your privacy. In order to process your warranty claim and contact you in the event of a product recall, we ask you to share certain personal information with us, either directly or through your local Toro company or dealer.

The Toro warranty system is hosted on servers located within the United States where privacy law may not provide the same protection as applies in your country.

BY SHARING YOUR PERSONAL INFORMATION WITH US, YOU ARE CONSENTING TO THE PROCESSING OF YOUR PERSONAL INFORMATION AS DESCRIBED IN THIS PRIVACY NOTICE.

The Way Toro Uses Information
Toro may use your personal information to process warranty claims, to contact you in the event of a product recall and for any other purpose which we tell you about. Toro may share your information with Toro's affiliates, dealers or other business partners in connection with any of these activities. We will not sell your personal information to any other company. We reserve the right to disclose personal information in order to comply with applicable laws and with requests by the appropriate authorities, to operate our systems properly or for our own protection or that of other users.

Retention of your Personal Information
We will keep your personal information as long as we need it for the purposes for which it was originally collected or for other legitimate purposes (such as regulatory compliance), or as required by applicable law.

Toro's Commitment to Security of Your Personal Information
We take reasonable precautions in order to protect the security of your personal information. We also take steps to maintain the accuracy and current status of personal information.

Access and Correction of your Personal Information
If you would like to review or correct your personal information, please contact us by email at legal@toro.com.

Australian Consumer Law

Australian customers will find details relating to the Australian Consumer Law either inside the box or at your local Toro Dealer.

TimeCutter
and
TITAN
Mowers

The Toro Warranty

Limited Warranty (see warranty periods below)

Conditions and Products Covered

The Toro Company and its affiliate, Toro Warranty Company, pursuant to an agreement between them, jointly promise to repair the Toro Products listed below if defective in materials or workmanship.

The following time periods apply from the date of purchase by the original owner:

Products	Warranty Period
TimeCutter Mowers	Residential use[2] – 3 years
• Engines[1] — Residential use	Kawasaki – 3 years Kohler – 3 years Toro – 3 years
TimeCutter Mowers	Commercial use 30 days
• Engines[1] — Commercial use	Kawasaki – 3 years Kohler – 90 days Toro – 90 days
TITAN ZX and SS Series Mowers – Residential or Commercial use	3 years or 300 hours[3]
• Engines[1] — Residential or Commercial use	Kawasaki – 3 years
• Frame	Lifetime (original owner only)[4]
TITAN MX Series Mowers – Residential or Commercial use	4 years or 400 hours[3]
• Engines[1] — Residential or Commercial use	Kawasaki – 3 years
• Frame	Lifetime (original owner only)[4]
All Mowers	
• Attachments	1 year
• Battery	90 days Parts and Labor 1 year Parts only
• Belts and Tires	90 days

[1]Some engines used on Toro Products are warranted by the engine manufacturer.

[2]Residential use means use of the product on the same lot as your home. Use at more than one location is considered commercial use and the commercial use warranty would apply.

[3]Whichever occurs first.

[4]Lifetime Frame Warranty - If the main frame, consisting of the parts welded together to form the tractor structure that other components such as the engine are secured to, cracks or breaks in normal use, it will be repaired or replaced, at Toro's option, under warranty at no cost for parts and labor. Frame failure due to misuse or abuse and failure or repair required due to rust or corrosion are not covered.

Warranty may be denied if the hour meter is disconnected, altered, or shows signs of being tampered with.

Owner Responsibilities

You must maintain your Toro Product by following the maintenance procedures described in the *Operator's Manual*. Such routine maintenance, whether performed by a dealer or by you, is at your expense.

Instructions for Obtaining Warranty Service

If you think that your Toro Product contains a defect in materials or workmanship, follow this procedure:

1. Contact any Authorized Toro Service Dealer to arrange service at their dealership. To locate a dealer convenient to you, access our web site at www.Toro.com. You may also call the numbers listed in item #3 to use the 24-hour Toro Dealer locator system.
2. Bring the product and your proof of purchase (sales receipt) to the Service Dealer. The dealer will diagnose the problem and determine if it is covered under warranty.
3. If for any reason you are dissatisfied with the Service Dealer's analysis or with the assistance provided, contact us at:

   Toro Warranty Company
   Customer Care Department, RLC Division
   8111 Lyndale Avenue South
   Bloomington, MN 55420-1196
   Toll free at 866-216-6029 (U.S. customers)
   Toll free at 866-216-6030 (Canadian customers)

Items and Conditions Not Covered

There is no other express warranty except for special emission system coverage and engine warranty coverage on some products. This express warranty does not cover the following:

- Cost of regular maintenance service or parts, such as filters, fuel, lubricants, oil changes, spark plugs, air filters blade sharpening or worn blades, cable/linkage adjustments, or brake and clutch adjustments
- Components failing due to normal wear
- Any product or part which has been altered or misused or neglected or requires replacement or repair due to accidents or lack of proper maintenance
- Pickup and delivery charges
- Repairs or attempted repairs by anyone other than an Authorized Toro Service Dealer
- Repairs necessary due to failure to follow recommended fuel procedure (consult *Operator's Manual* for more details)
  - Removing contaminants from the fuel system is not covered
  - Use of old fuel (more than one month old) or fuel which contains more than 10% ethanol or more that 15% MTBE
  - Failure to drain the fuel system prior to any period of non-use over one month

General Conditions

All repairs covered by these warranties must be performed by an Authorized Toro Service Dealer using Toro approved replacement parts.

Neither The Toro Company nor Toro Warranty Company is liable for indirect, incidental or consequential damages in connection with the use of the Toro Products covered by this warranty, including any cost or expense of providing substitute equipment or service during reasonable periods of malfunction or non-use pending completion of repairs under this warranty.

All implied warranties of merchantability (that the product is fit for ordinary use) and fitness for use (that the product is fit for a particular purpose) are limited to the duration of the express warranty.

Some states do not allow exclusions of incidental or consequential damages, or limitations on how long an implied warranty lasts, so the above exclusions and limitations may not apply to you.

This warranty gives you specific legal rights, and you may also have other rights which vary from state to state.

Countries Other than the United States or Canada

This warranty is not valid in Mexico. Customers who have purchased Toro products outside the United States or Canada should contact their Toro Distributor (Dealer) to obtain guarantee policies for your country, province, or state. If for any reason you are dissatisfied with your Distributor's service or have difficulty obtaining guarantee information, contact the Toro importer. If all other remedies fail, you may contact us at Toro Warranty Company.

Australian Consumer Law: Australian customers will find details relating to the Australian Consumer Law either inside the box or at your local Toro Dealer.