Form No. 3417-807 Rev A

TORO®

Count on it.

Parts Catalog

Z Master® Professional 5000 Series Riding Mower

with 60in TURBO FORCE® Rear Discharge Mower

Model No. 74943—Serial No. 402100000 and Up

Register at www.Toro.com.
Original Instructions (EN)

3417-807 A

Ordering Replacement Parts

To order replacement parts, please supply the part number, the quantity, and the description of each part desired.

Understanding Reference Numbers

Each identified part in an illustration has a reference number. The reference number for a part also appears in the parts list, along with other information about the part.

This catalog uses two special reference number formats, one to indicate parts in a service assembly and another to indicate the quantity of a given part in an illustration.

Service Assembly Reference Numbers

Parts in service assemblies have reference numbers in the form a:b. The a represents the reference number of the entire service assembly and the b represents a sequential number unique to each part within the service assembly.

For example, a wheel assembly might be identified by reference number 6, the tire by 6:1, the valve by 6:2, and the wheel by 6:3. When you order the assembly identified by reference number 6, you receive all parts identified by reference numbers 6:1,6:2, and 6:3. However, you may also order any part individually. Reference numbers of this type appear in illustration and in parts lists.

Reference Numbers Indicating Quantity

In an illustration, if a reference number indicates more than one part, the reference number has the form nX y. The n represents the quantity of the part, the X is the multiplication symbol, and the y represents the reference number.

For example, in an illustration, the reference number 2X 37 means that two of the parts identified by reference number 37 are indicated.

Contents

Frame Assembly 4
Roll-Over Protection System Assembly 6
Roll-Over Protection System Assembly No. 116-0231 8
Front Caster and Fork Assembly 10
Caster Fork and Wheel Assembly 12
Hydraulic Drive Assembly 14
Pump Idler Assembly No. 116-1255 16
LH Hydro Assembly No. 126-1323 18
RH Hydro Assembly No. 126-1324 20
Rear Wheel Assembly 22
Park Brake Assembly 24
Fuel System Assembly 26
Fuel Tank Assembly No. 135-0643 28
Seat Mounting Assembly 30
Seat Assembly No. 125-3107 32
Motion Control Assembly 34
Control Console Assembly 36
Electrical Assembly 38
Wire Harness Assembly No. 126-5875 40
Deck Lift Assembly 42
Height-of-Cut Assembly No. 109-7438 44
Engine Assembly 46
Deck Assembly 48
Deck Decal Assembly No. 136-8646 50
Spindle Assembly No. 127-0560 52
LH Spindle Assembly No. 127-0570 54
Idler Assembly No. 126-0853 56
Deck Idler Assembly No. 126-1720 58
Rear Discharge Tunnel Assembly 60
Discharge Tunnel Assembly No. 126-4930 62
Frame Decal Assembly 64
Attachments and Accessories 66

© 2017—The Toro® Company
8111 Lyndale Avenue South
Bloomington, MN 55420

Contact us at www.Toro.com.
Printed in the USA.
All Rights Reserved

Frame Assembly

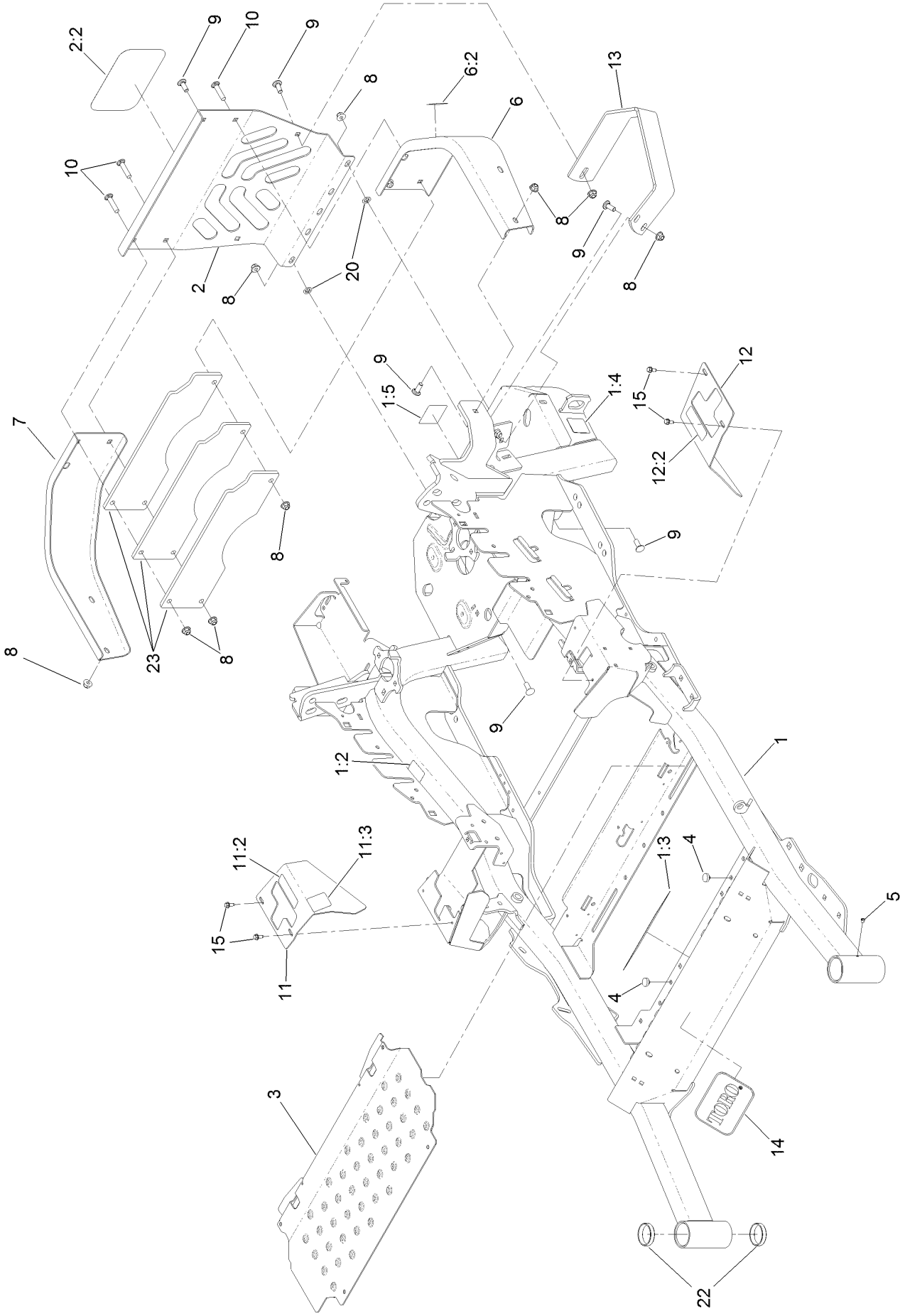

Frame Assembly (continued)

Ref.	Part Number	Qty.	Description
1	116-9720	1	Mainframe ASM
1:2	106-5517	2	Decal-Warning
1:3	132-0871	1	Decal-Danger
1:4	106-2655	2	Decal-Hazard, Pinched Finger
1:5	116-4858	1	Decal-Spark Arrester
2	115-7410	1	Rear Guard ASM
2:2	67-7320	1	Decal
3	116-8898-01	1	Floorpan
4	1-513658	2	Bumper
5	1-811010	2	Plug
6	116-0180	1	LH Bumper ASM
6:2	106-5517	1	Decal-Warning
7	116-0057-03	1	Bumper-RH
8	104-8301	11	Nut-HF, NI
9	3231-22	8	Screw-CARR
10	3231-29	3	Screw-CARR
11	116-5899	1	RH Motion Control Cover ASM
11:2	99-8936	1	Decal-Control, Motion
11:3	116-5988	1	Decal-Park Brake, CE
12	116-0580	1	LH Motion Control Cover ASM
12:2	99-8936	1	Decal-Control, Motion
13	126-2067-03	1	Guard-Muffler
14	68-3640	1	Decal
15	32144-10	4	Screw-HWH
20	107-3154	2	Nut-Push
22	1-543508	4	Cup-Bearing
23	126-4772-03	3	Plate-Weight, 6 Lb

Roll-Over Protection System Assembly

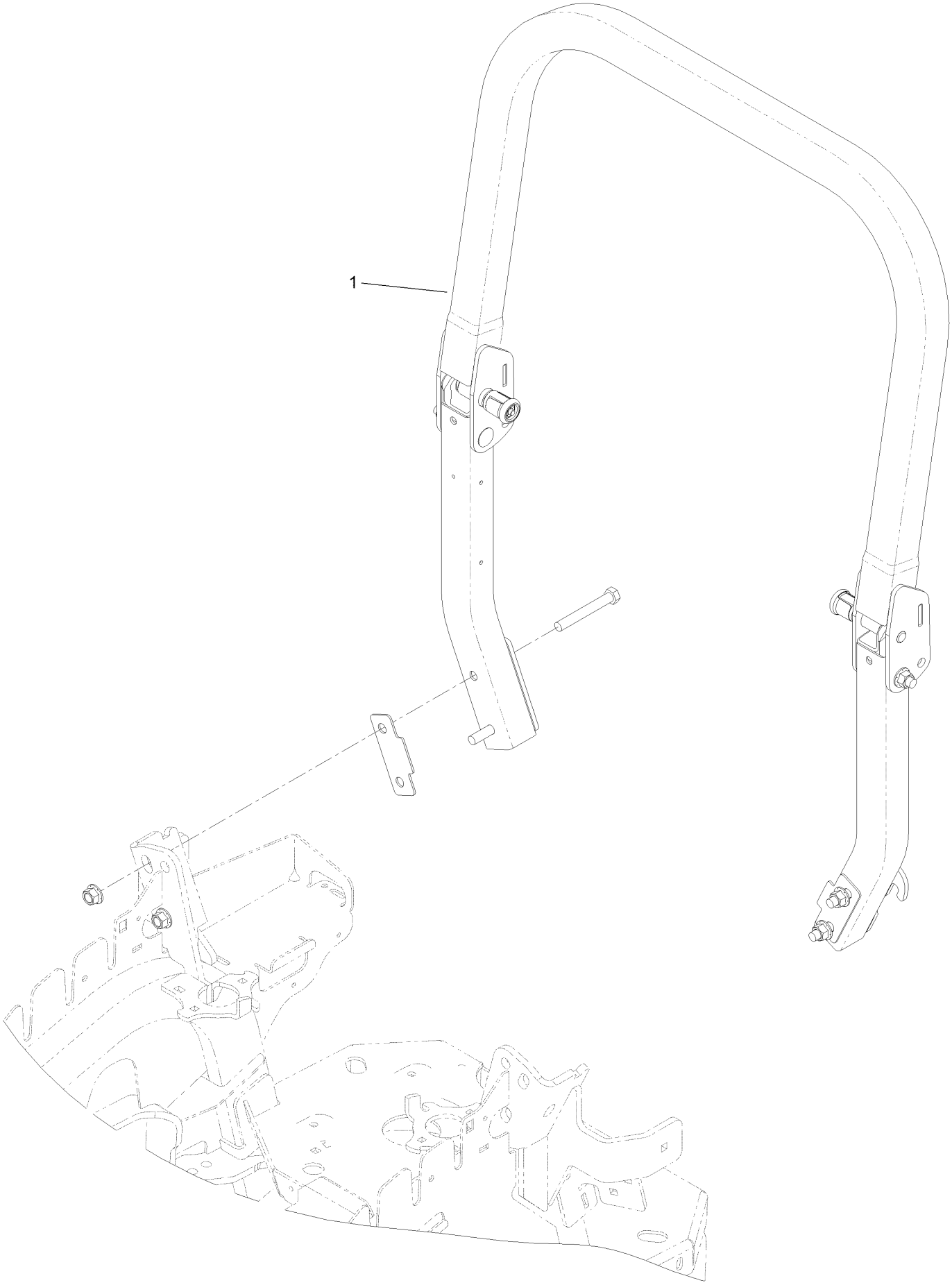

Roll-Over Protection System Assembly (continued)

Ref.	Part Number	Qty.	Description
1	116-0231	1	ROPS ASM

Roll-Over Protection System Assembly No. 116-0231

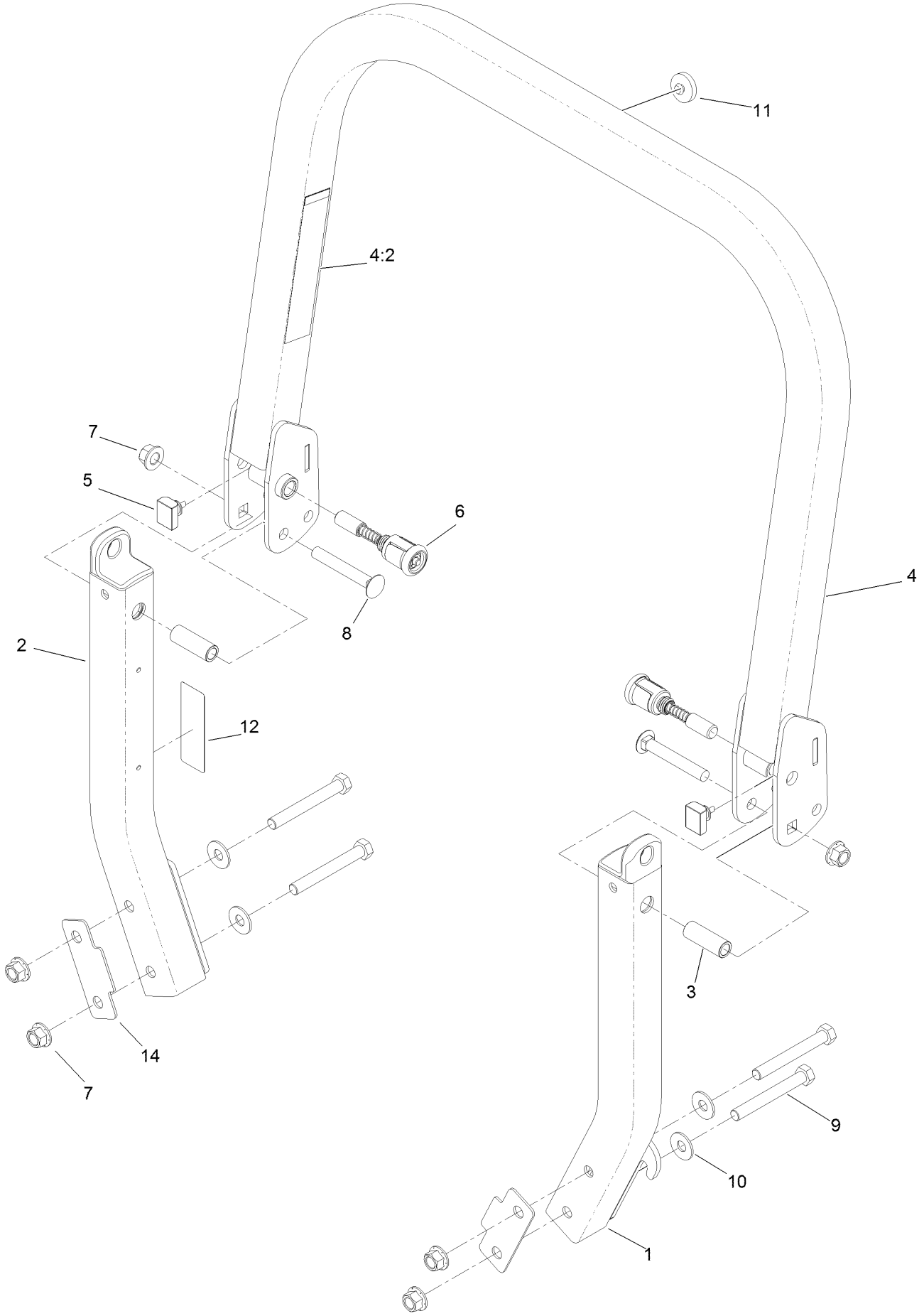

Roll-Over Protection System Assembly No. 116-0231 (continued)

Ref.	Part Number	Qty.	Description
1		1	Leg-ROPS, LH ●
2		1	Leg-ROPS, RH ●
3	109-6653	2	Spacer
4		1	Upper ROPS ASM ●
4:2	107-3069	1	Decal-Warning
5	109-5337	2	Bumper-ROPS
6	116-0104	2	Pin-Spring
7	99-5107	6	Nut-Lock
8	3233-10	2	Screw-CARR
9	325-35	4	Screw-HH
10	109-9505	4	Washer-Spring
11	109-9233	1	Bumper-Push-In, Rubber
12	117-0346	1	Decal-Caution, Fuel Vent
14	116-0960	2	Spacer

● Not serviced separately

Front Caster and Fork Assembly

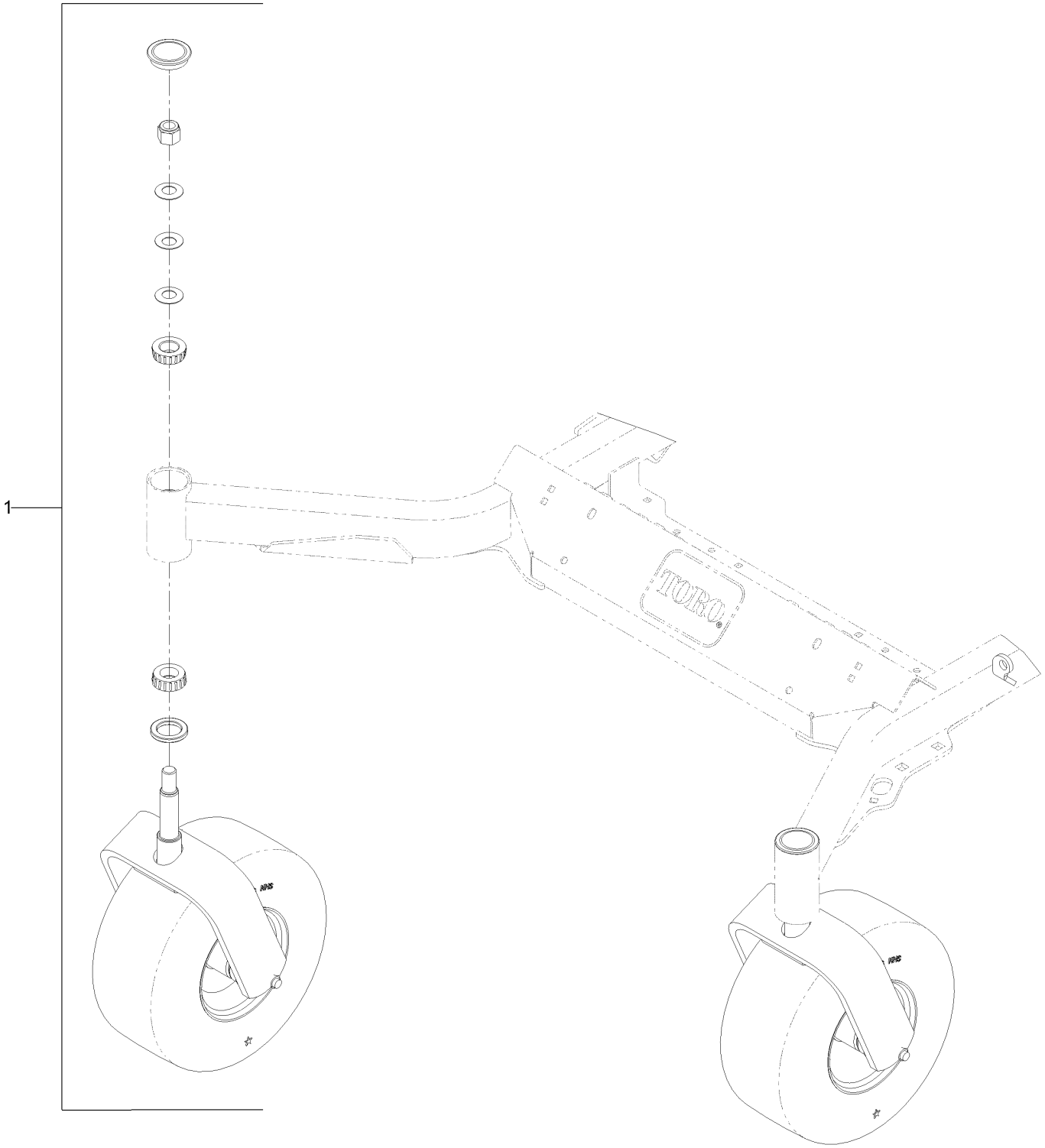

Front Caster and Fork Assembly (continued)

Ref.	Part Number	Qty.	Description
1		2	Caster Wheel ASM ●

● Not serviced separately

Caster Fork and Wheel Assembly

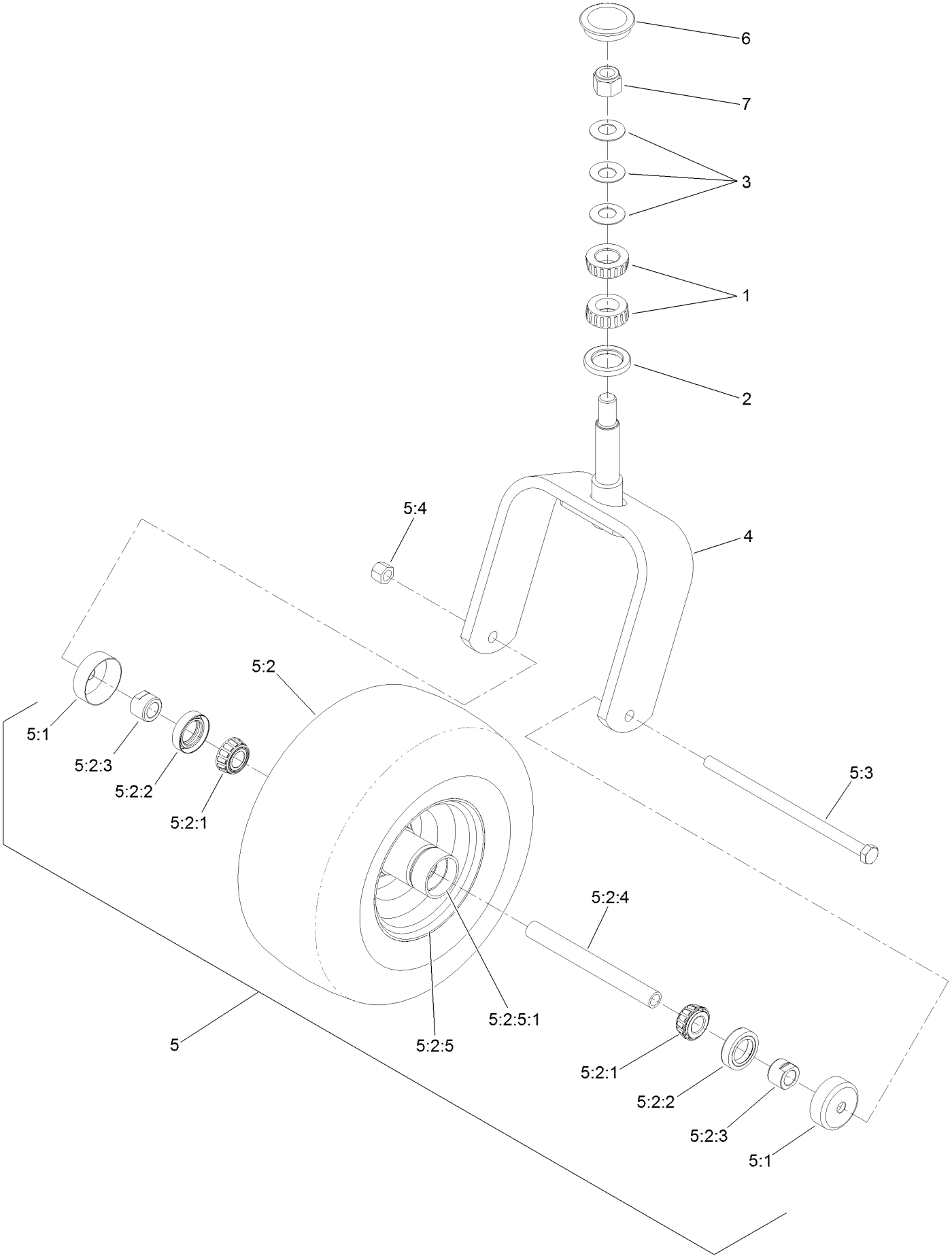

Caster Fork and Wheel Assembly (continued)

Ref.	Part Number	Qty.	Description
1	1-543509	2	Bearing-Roller, Tapered
2	116-5647	1	Seal-Grease
3	1-633508	3	Washer-Bellville
4	116-6707-01	1	Caster
5	127-9528	1	Wheel And Axle ASM
5:1	103-2768	2	Guard-Seal
5:2		1	Wheel And Bearing ASM ●
5:2:1	1-633585	2	Bearing-Cone, Taper
5:2:2	103-0063	2	Seal-Caster
5:2:3	103-3051	1	Spacer-Nut ■
5:2:4	126-5361	1	Axle Caster ASM
5:2:5		1	Wheel And Tire ASM ●
5:2:5:1	1-633584	2	Bearing-Cup
5:3	325-39	1	Screw-HH
5:4	3296-23	1	Nut-Lock, NI
6	103-4882	1	Cap-Grease
7	3296-51	1	Nut-Lock, NI

● Not serviced separately
■ Use Pro-Lock, Nut Type (P/N 1-840022, .5ml tube) on threads.

Hydraulic Drive Assembly

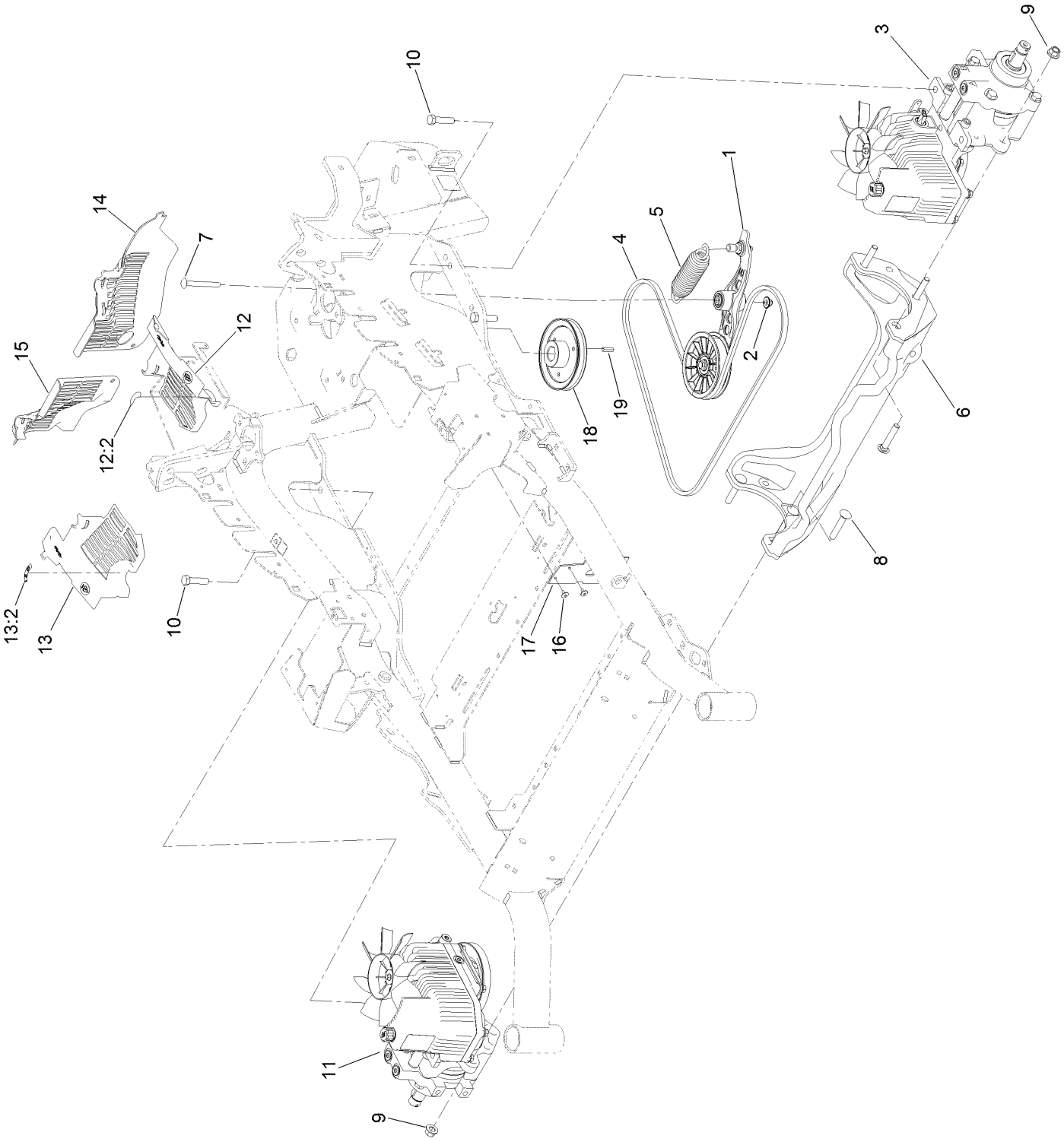

Hydraulic Drive Assembly (continued)

Ref.	Part Number	Qty.	Description
1	116-1255	1	Pump Idler ASM
2	109-6658	1	Nut-Flange, NI
3	126-1323	1	LH Hydro ASM (12Cc W/ Shock)
4	109-3388	1	Belt
5	116-6317	1	Spring-Extension
6	116-7558	1	Cradle-Hydro
7	116-1502	1	Bolt-Shoulder, Carriage
8	126-0095	6	Screw-CARR
9	99-5107	6	Nut-Lock
10	325-8	4	Screw-HH
11	126-1324	1	RH Hydro ASM (12Cc W/ Shock)
12	116-0170	1	LH Hydro Guard ASM
12:2	116-8726	1	Decal-Oil, Hydro
13	116-0171	1	RH Hydro Guard ASM
13:2	116-8726	1	Decal-Oil, Hydro
14	109-9057	1	Guard-Hydro, Rear (LH)
15	109-9058	1	Guard-Hydro, Rear (RH)
16	1-803035	2	Rivet-Pop
17	116-2362	1	Deflector-Air Flow
18	109-9905	1	Sheave
19	1-807259	1	Key
99	114-4713	1	Hypr-Oil 500 (Quart) ●
99	114-4714	1	Hypr-Oil 500 (Gallon) ●
99	114-4715	1	Hypr-Oil 500-5 (5 Gallon) ●
99	117-0390	1	Filter-Hydro ●

● Not illustrated

Pump Idler Assembly No. 116-1255

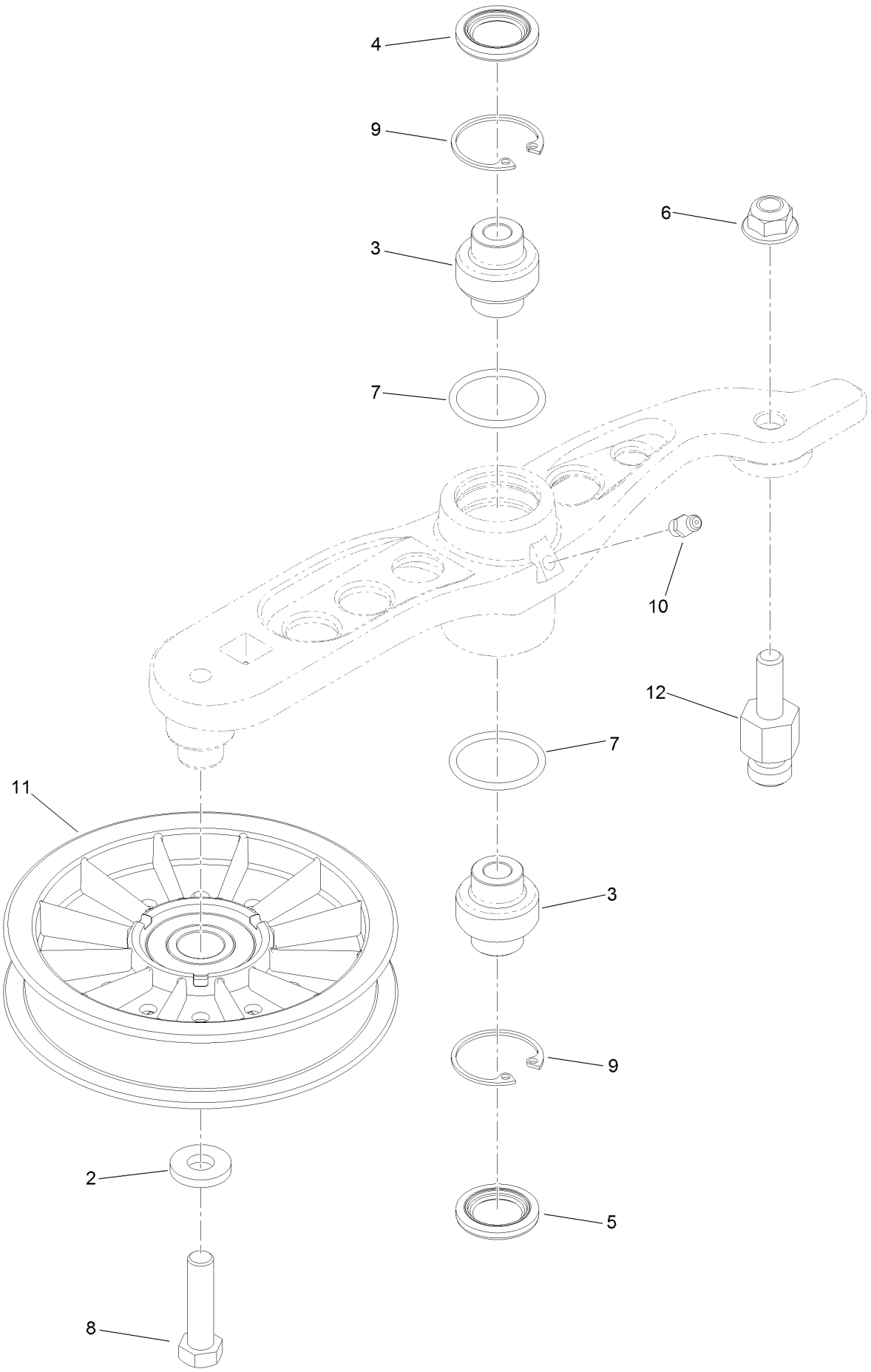

Pump Idler Assembly No. 116-1255 (continued)

Ref.	Part Number	Qty.	Description
2	43-0940	1	Spacer
3	103-3504	2	Bearing-Spherical
4	103-3505	1	Seal-Lip, Double
5	103-3506	1	Seal-Lip, Single
6	109-6658	1	Nut-Flange, NI
7	106-7159	2	O-Ring
8	323-8	1	Screw-HH
9	32120-10	2	Ring-Snap
10	302-19	1	Fitting-Grease
11	109-8076	1	Pulley-Idler
12	132-4724	1	Pin-Anchor, Spring

LH Hydro Assembly No. 126-1323

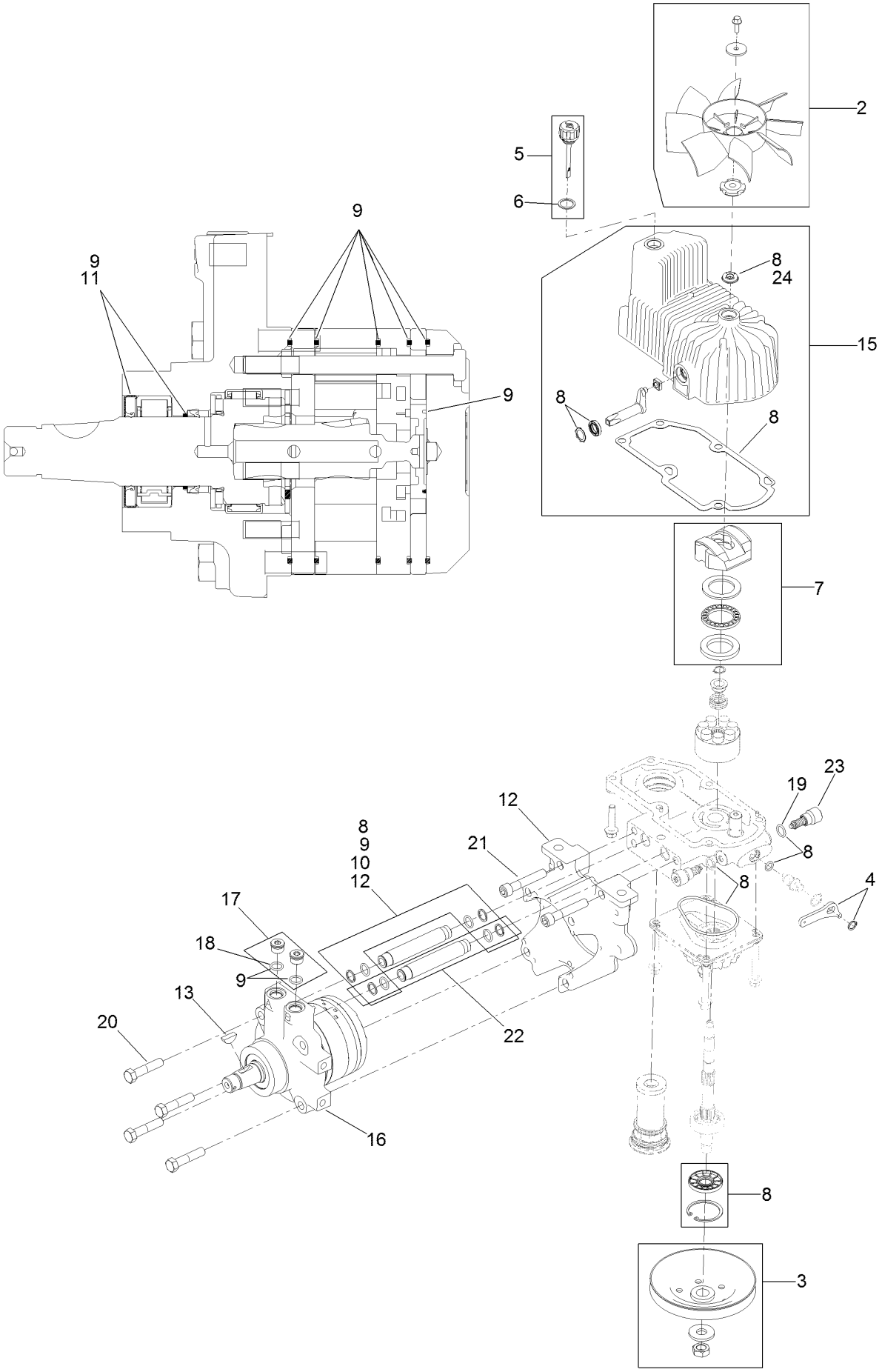

LH Hydro Assembly No. 126-1323 (continued)

Ref.	Part Number	Qty.	Description
2	116-0233	1	Fan Kit
3	116-0234	1	Pulley Kit
4	116-0235	1	Handle-Bypass Valve, Hydro
5	116-0236	1	Dipstick-Hydro W/Gasket
6	116-0237	1	Gasket-Dipstick, Hydro
7	116-1367	1	Swash Block Kit
8	116-1368	1	Pump Seal Kit
9	116-1369	1	Motor Seal Kit
10	116-1370	1	Tube Seal Kit
11	116-1371	1	Output Shaft Seal Kit
12	116-5469	1	Nose Cup-Uht
13	3257-42	1	Key-Woodruff
15	116-3287	1	Housing-LH
16	116-8915	1	Motor-Hydraulic LH 240Cc
17	116-7901	1	Magnetic Plugs Service Kit
18	76-1900	2	O-Ring
19	116-8662	2	O-Ring-Check Valve
20	116-8974	4	Screw HH
21	116-8975	2	Screw-HSH
22	116-9922	2	Hydraulic Tube Kit
23	126-7466	2	Shock Valve, 12Cc Hydro
24	126-7711	1	Seal-Fan Drive
99	116-4245	1	Puller-Pulley ●
99	116-1373	1	Flow Test Kit ●

● Not illustrated

RH Hydro Assembly No. 126-1324

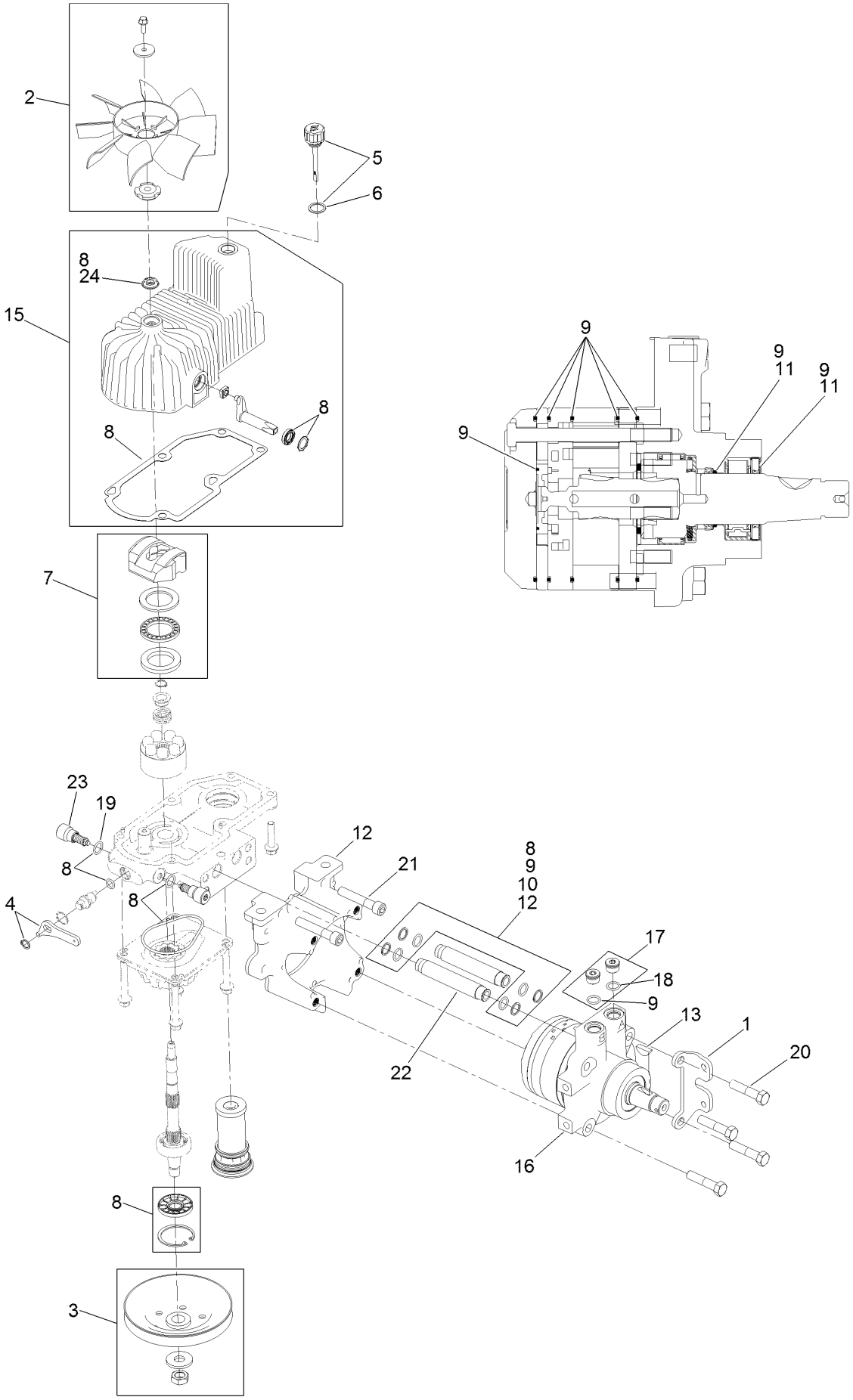

RH Hydro Assembly No. 126-1324 (continued)

Ref.	Part Number	Qty.	Description
1	116-9063	1	Mount-Shoe, Horse
2	116-0233	1	Fan Kit
3	116-0234	1	Pulley Kit
4	116-0235	1	Handle-Bypass Valve, Hydro
5	116-0236	1	Dipstick-Hydro W/Gasket
6	116-0237	1	Gasket-Dipstick, Hydro
7	116-1367	1	Swash Block Kit
8	116-1368	1	Pump Seal Kit
9	116-1369	1	Motor Seal Kit
10	116-1370	1	Tube Seal Kit
11	116-1371	1	Output Shaft Seal Kit
12	116-5469	1	Nose Cup-Uht
13	3257-42	1	Key-Woodruff
15	116-3288	1	Housing-RH
16	116-8916	1	Motor-Hydraulic RH 240Cc
17	116-7901	1	Magnetic Plugs Service Kit
18	76-1900	2	O-Ring
19	116-8662	2	O-Ring-Check Valve
20	116-8974	4	Screw HH
21	116-8975	2	Screw-HSH
22	116-9922	2	Hydraulic Tube Kit
23	126-7466	2	Shock Valve, 12Cc Hydro
24	126-7711	1	Seal-Fan Drive
99	116-4245	1	Puller-Pulley ●
99	116-1373	1	Flow Test Kit ●

● Not illustrated

Rear Wheel Assembly

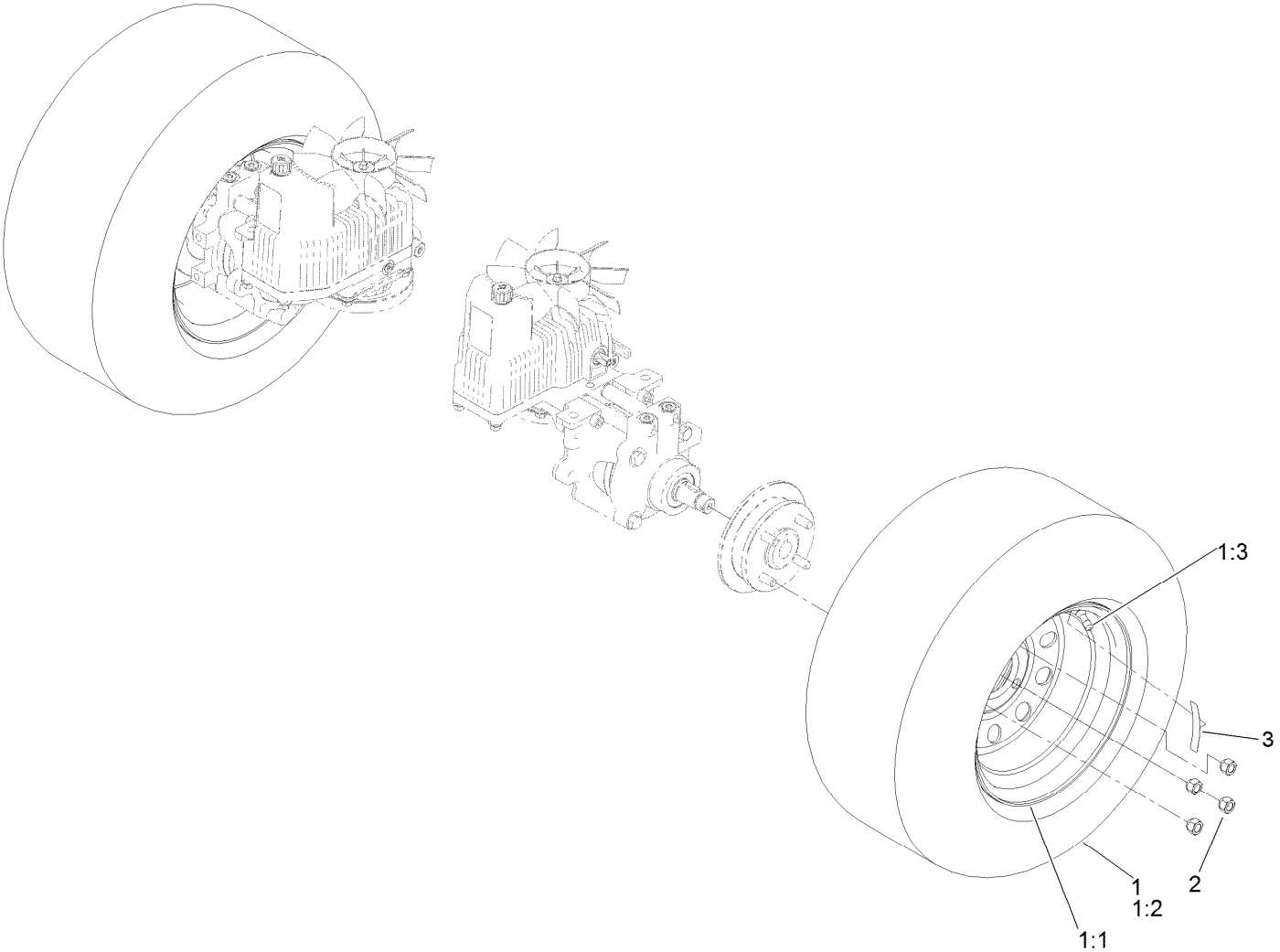

Rear Wheel Assembly (continued)

Ref.	Part Number	Qty.	Description
1	127-9520	2	Wheel And Tire ASM
1:1	127-9517	1	Wheel
1:2	1-633993	1	Tire
1:3	232-27	1	Stem-Valve
2	242-50	8	Nut-Lug
3	126-2055	2	Decal-Torque, Wheel Hub Lug

Park Brake Assembly

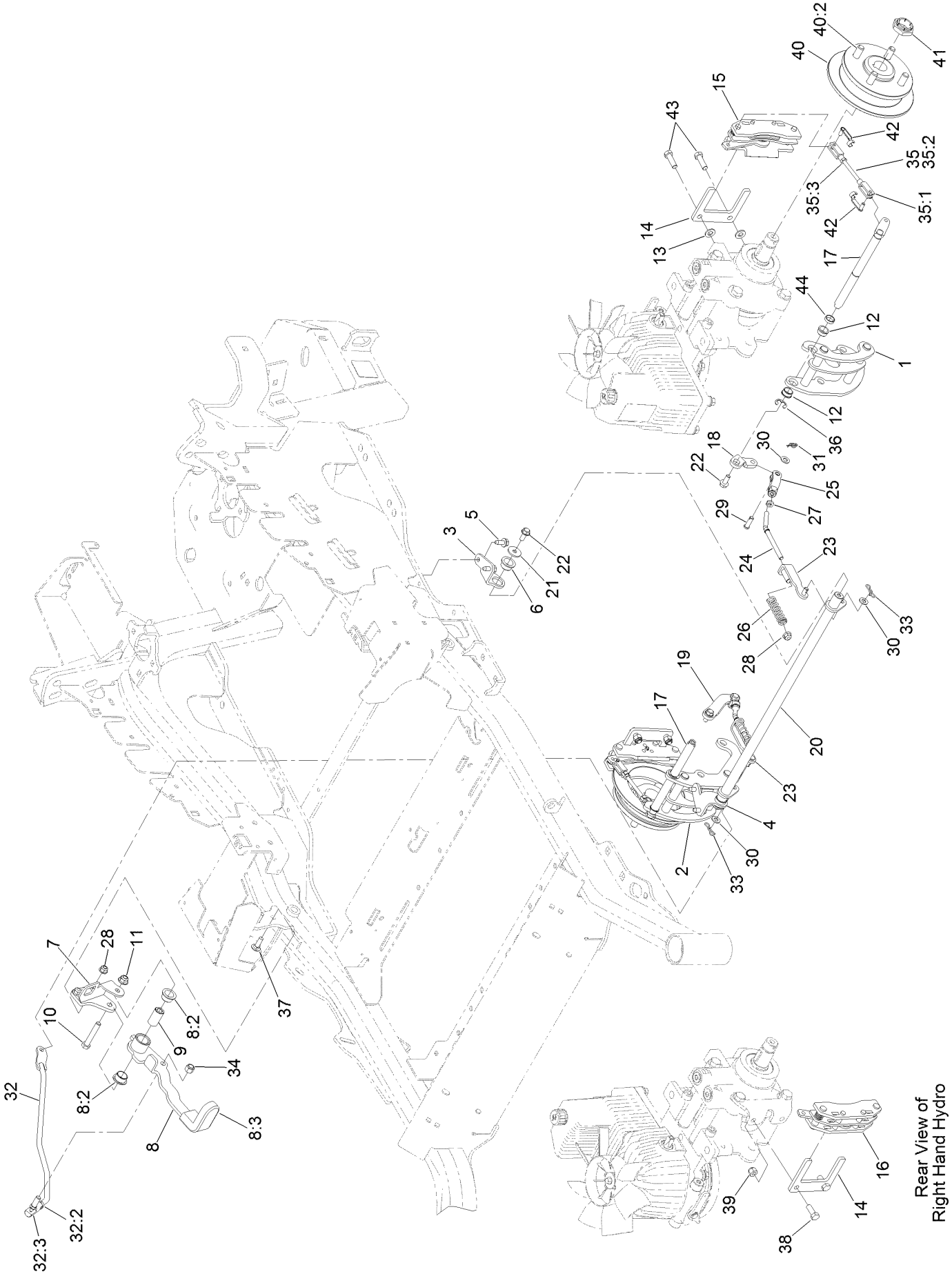

Park Brake Assembly (continued)

Ref.	Part Number	Qty.	Description
1	126-4248	1	Mount-Bellcrank, LH
2	126-4249	1	Mount-Bellcrank, RH
3	116-9681	1	Mount-Pivot, LH
4	116-9682	1	Mount-Pivot, RH
5	32144-70	4	Screw-HWHTF
6	109-8054	2	Bushing-Flange
7	116-9096-01	1	Bracket-Mount
8	132-9406	1	Brake Lever ASM W/ Grip
8:2	109-8054	2	Bushing-Flange
8:3	132-4749	1	Grip-Lever
9	116-9117	1	Handle-Pivot, Brake
10	323-11	1	Screw-HH
11	104-8301	1	Nut-HF, NI
12	126-6199	4	Bushing
13	3256-24	2	Washer-Flat
14	109-0958	2	Plate-Mount, Brake
15	109-2889	1	Caliper-Brake
16	116-9103	1	Caliper-Brake, RH
17	126-4251	2	Bellcrank
18	126-3715	1	Arm-Inner, LH
19	126-3716	1	Arm-Inner, RH
20	116-9080	1	Shaft-Cross
21	115-7109	2	Washer-Flat
22	98-9940	4	Screw
23	116-9609	2	Bracket-L
24	116-9086	2	Linkage-Mid
25	126-3693	2	Yoke-Offset
26	116-9085	2	Spring-Compression
27	3220-2	2	Nut-Jam
28	104-8300	4	Nut-HF, NI
29	1-808280	2	Pin-Clevis
30	3256-23	4	Washer-Plain
31	116-6639	2	Pin-Cotter, Locking
32	116-9102	1	Front Linkage ASM
32:2	94-7572	1	End-Tie Rod, RH
32:3	3220-3	1	Nut-HJ
33	119-1415	2	Pin-Cotter, Locking
34	3296-6	1	Nut-Lock
35	126-7587	2	Rear Linkage ASM
35:1	126-7588	2	Yoke
35:2	116-9069	1	Linkage, Rear
35:3	3220-1	1	Nut-Jam
36	32120-19	2	E-Ring
37	3230-2	2	Bolt-CARR
38	323-6	2	Screw-HH
39	3296-39	2	Nut-Lock, NI
40	116-1746	2	Wheel Hub ASM
40:2	116-1696	4	Stud-Wheel
41	116-1399	2	Locknut
42	126-6395	4	Pin-Clevis, Spring
43	92-5727	2	Screw-Lock, Patch
44	126-6200	2	Spacer

Fuel System Assembly

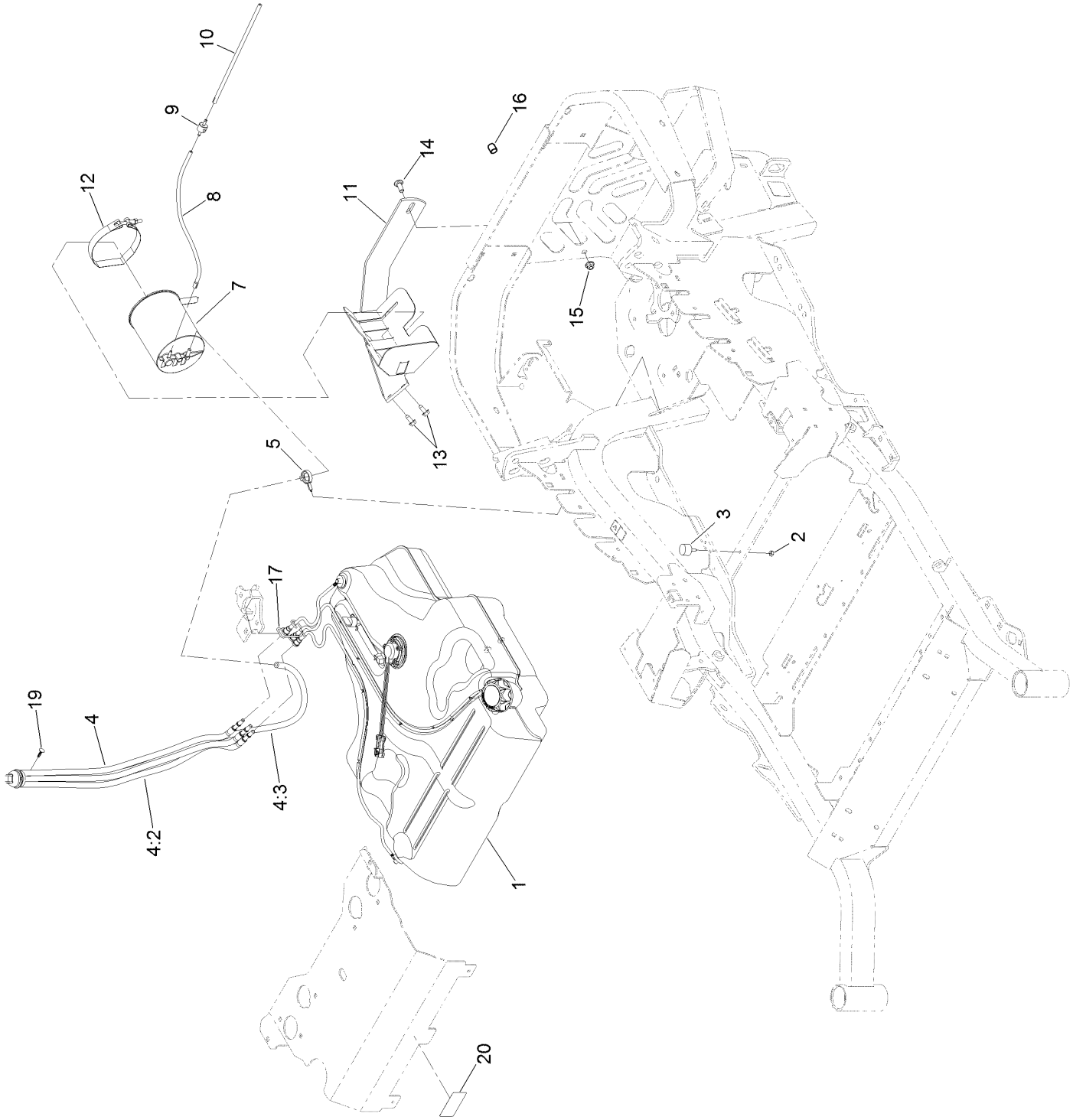

Fuel System Assembly (continued)

Ref.	Part Number	Qty.	Description
1	135-0643	1	Fuel Tank ASM
2	3218-1	2	Nut-Jam
3	1-523420	2	Bumper
4	127-0583	1	Fuel Manifold Vent ASM
4:2	109-0302	3	Hose-Fuel
4:3	108-5376	1	Hose-Fuel
5	105-1853	1	Clamp-Hose
7	116-1442	1	Canister-Carbon, 1200Cc
8	116-2963	1	Hose-Vent, Formed
9	133-8499	1	Valve-Check, Vacuum
10	119-4235	1	Hose-Vent, Formed
11	116-1433-03	1	Mount-Canister
12	116-2228	1	Clamp, T-Bolt
13	32144-70	2	Screw-HWHTF
14	3231-22	1	Screw-CARR
15	104-8301	1	Nut-HF, NI
16	116-4464	1	Plug-Port
17	116-6005	1	Retainer-Line, Vapor
19	125-8067	1	Plug-Plastic
20	121-7560	1	Decal-Efi

Fuel Tank Assembly No. 135-0643

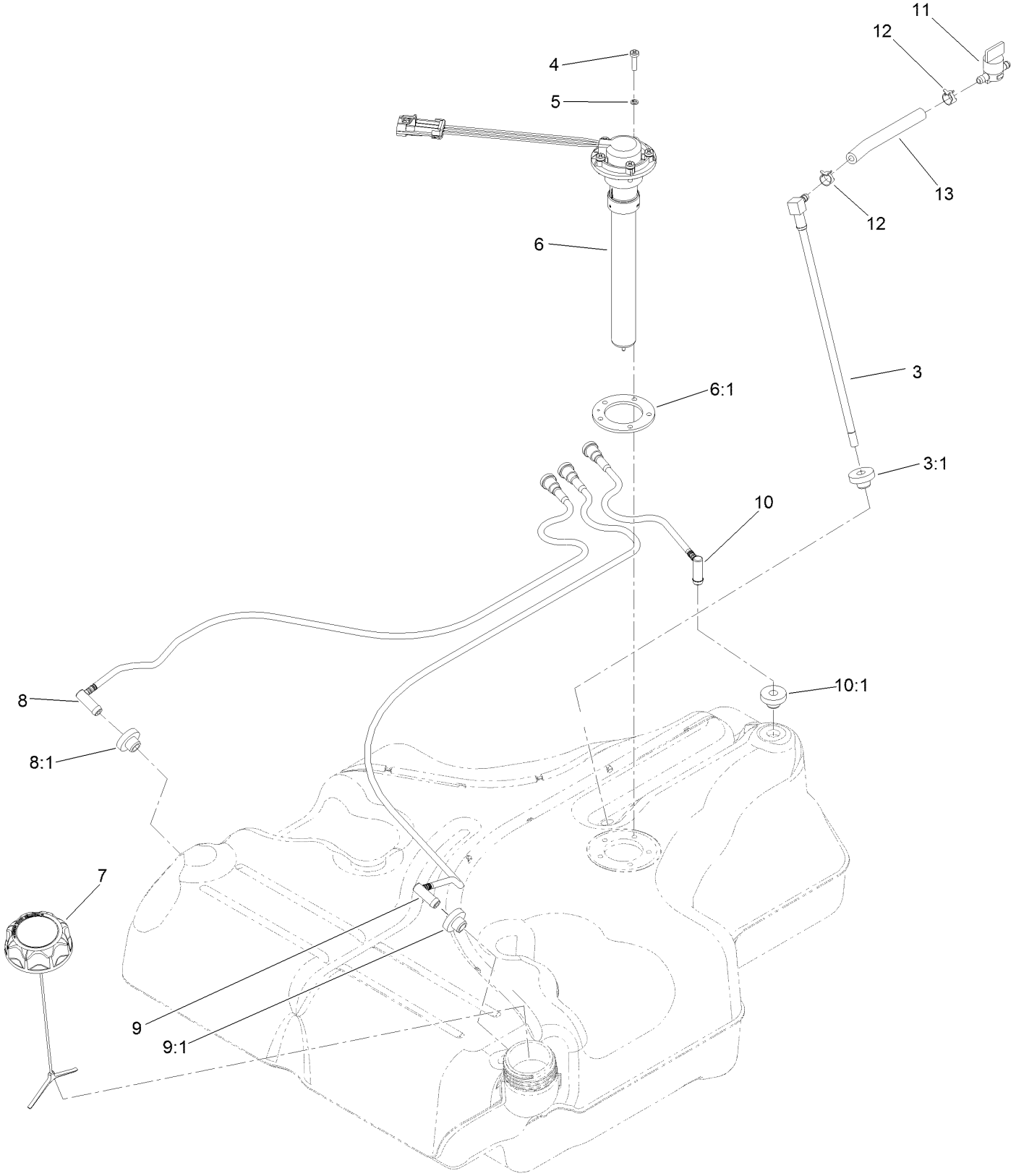

Fuel Tank Assembly No. 135-0643 (continued)

Ref.	Part Number	Qty.	Description
3	116-2459	1	Fuel Line Kit (With Grommet)
3:1	46-6560	1	Bushing
4	3290-500	5	Screw-PPH
5	3253-17	5	Washer-Lock
6	126-3913	1	Float-Sender, Fuel
6:1	126-3950	1	Gasket-Sender
7	126-1789	1	Cap-Fuel, Ratcheting
8	116-2460	1	RH Vent Line Kit (With Grommet)
8:1	46-6560	1	Bushing
9	116-2461	1	LH Vent Line Kit (With Grommet)
9:1	46-6560	1	Bushing
10	116-2462	1	Rear Vent Line Kit (With Grommet)
10:1	46-6560	1	Bushing
11	1-603770	1	Valve-Fuel
12	2412-98	2	Clamp-Hose
13	109-0650	1	Hose-Fuel

Seat Mounting Assembly

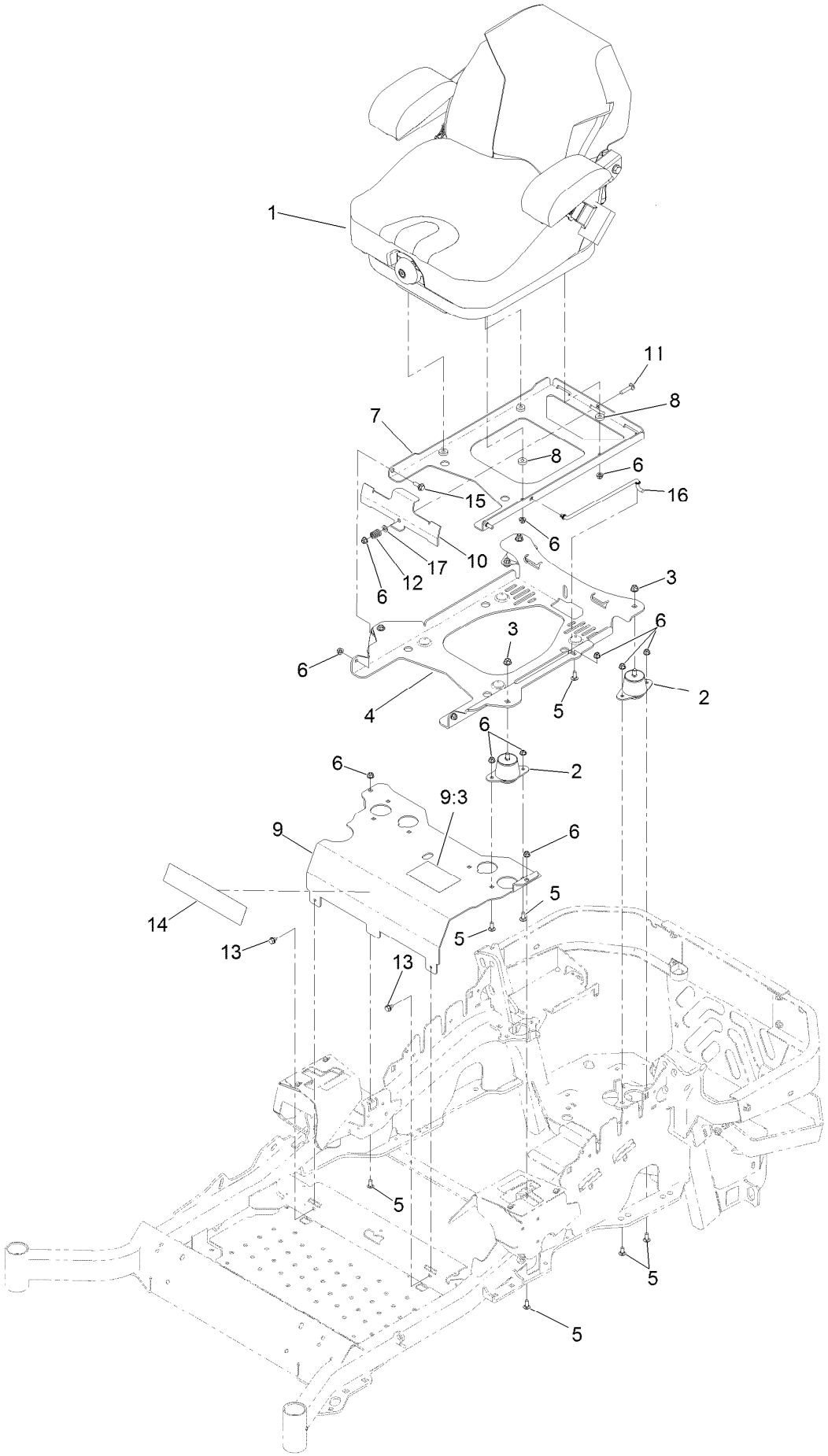

Seat Mounting Assembly (continued)

Ref.	Part Number	Qty.	Description
1	125-3107	1	Suspension Seat ASM
2	109-9034	4	Isolator-Seat
3	104-8301	4	Nut-HF, NI
4	116-3860-03	1	Plate-Tilt, Seat Support
5	3230-23	11	Screw-CARR
6	104-8300	18	Nut-HF, NI
7	116-3859-03	1	Plate-Frame, Seat
8	26-4840	4	Spacer-Pin, Mounting
9	125-9385	1	Seat Mount ASM

Ref.	Part Number	Qty.	Description
9:3	125-9383	1	Decal-Service Aid
10	109-9881-03	1	Plate-Latch, Seat
11	3230-4	1	Bolt-CARR
12	107-3017	1	Spring-Compression
13	9266934	2	Screw
14	119-2507	1	Decal
15	116-1297	2	Screw-Shoulder
16	116-0070	1	Rod-Prop
17	3256-23	1	Washer-Plain

Seat Assembly No. 125-3107

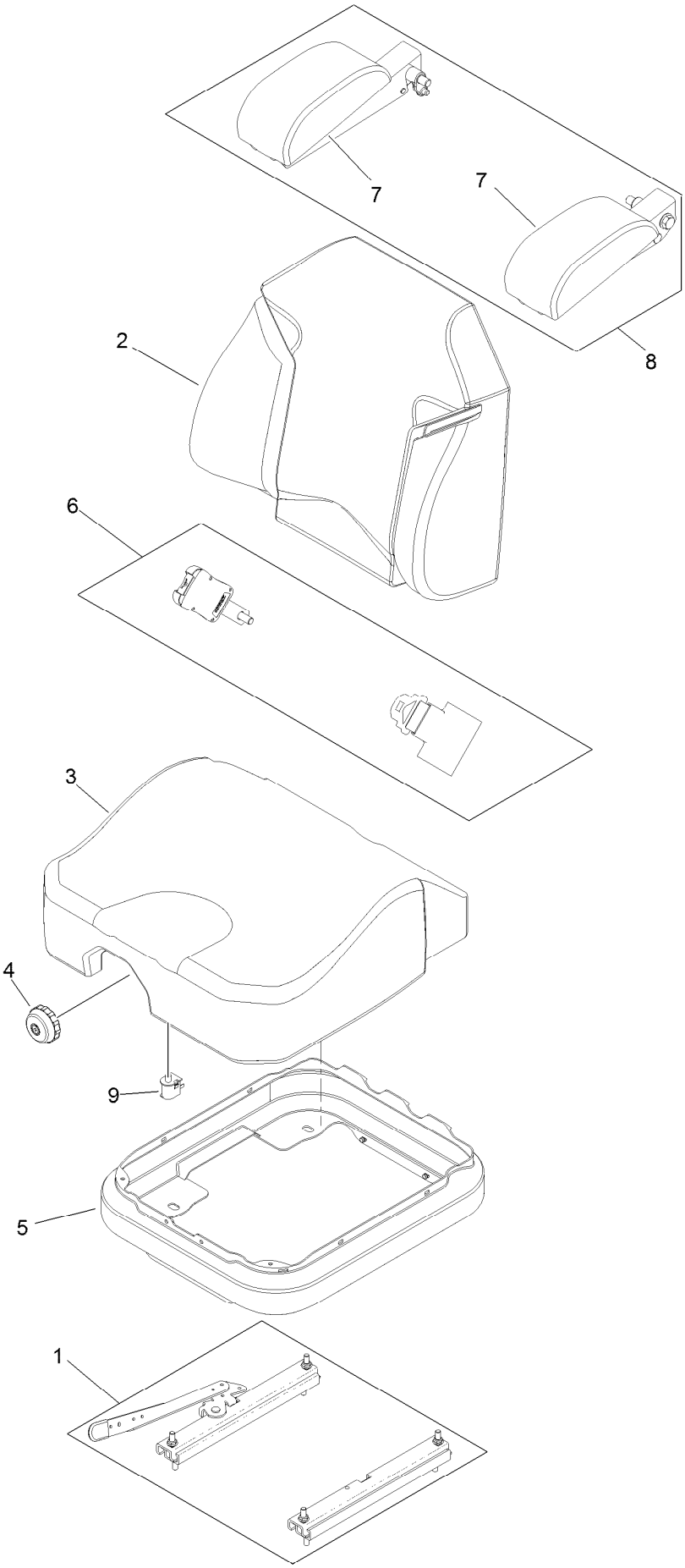

Seat Assembly No. 125-3107 (continued)

Ref.	Part Number	Qty.	Description
1	116-8910	1	Seat Track Set
2	125-3112	1	Cover-Back
3	125-3111	1	Cover-Cushion
4	116-8911	1	Knob-Adjuster
5	116-5659	1	Cover-Suspension Bellows
6	126-2061	1	Seat Belt Service Kit
7	109-9802	1	Arm Rest Pad Set
8	109-9803	1	Arm Rest Set
9	82-2190	1	Switch-Bail

Motion Control Assembly

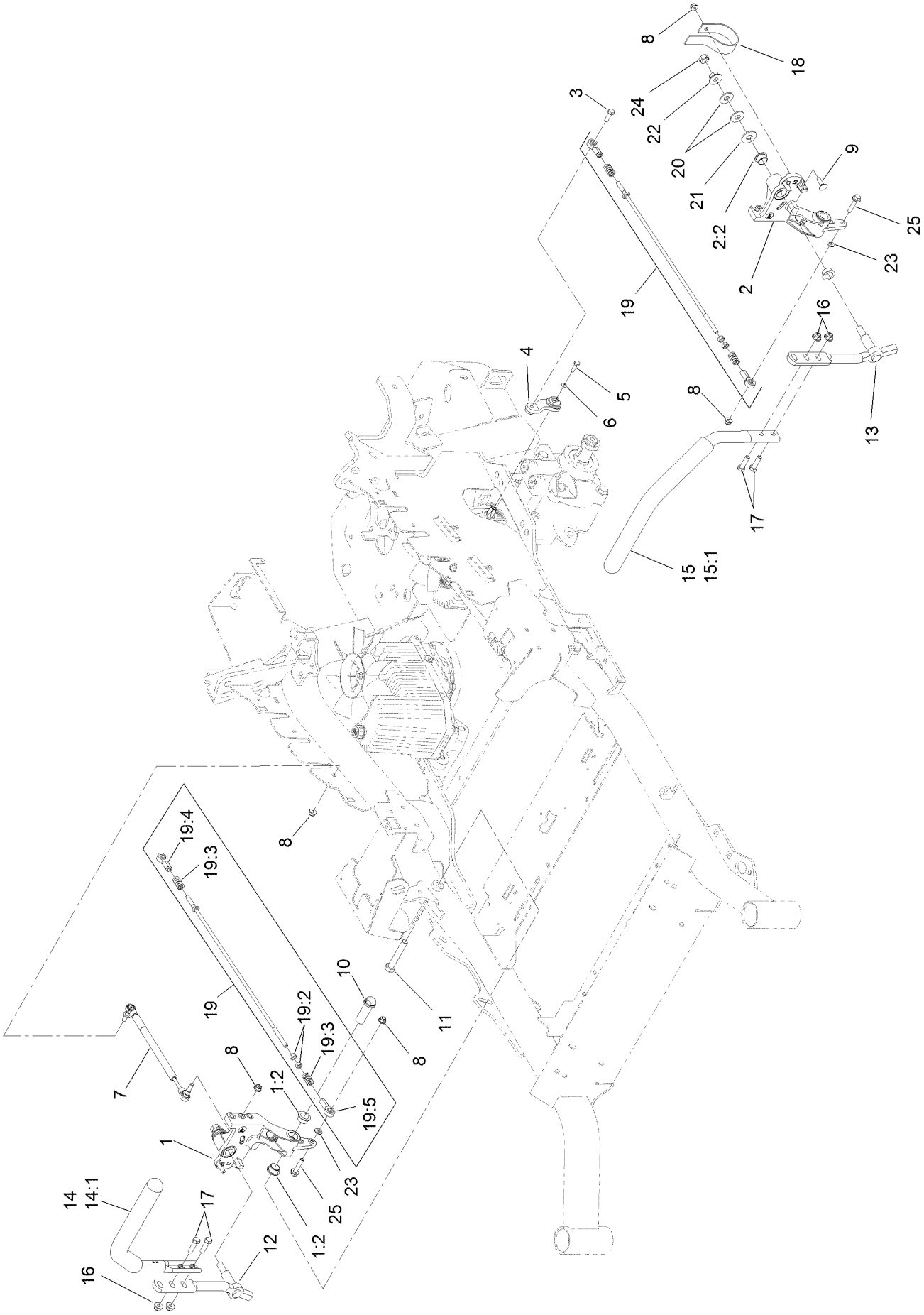

Motion Control Assembly (continued)

Ref.	Part Number	Qty.	Description
1	116-0880	1	RH Motion Control And Bushing ASM
1:2	109-8054	4	Bushing-Flange
2	116-0881	1	LH Motion Control And Bushing ASM
2:2	109-8054	4	Bushing-Flange
3	116-0648	2	Screw-HH, Thread Locking ●
4	109-4581	2	Arm-Control, Pump
5	9080046	2	Screw-HH ●
6	1-303435	2	Washer-Spring
7	116-0027	2	Damper-Control, Motion
8	104-8300	8	Nut-HF, NI
9	3230-2	2	Bolt-CARR
10	109-5891	2	Hub-Threaded
11	325-12	2	Screw-HH
12	116-0039	1	Lever-Control Motion, RH
13	116-0040	1	Lever-Control Motion, LH

Ref.	Part Number	Qty.	Description
14	109-6589	1	RH Steering Handle ASM
14:1	109-5668	1	Grip-Control, Lever
15	109-6590	1	LH Steering Handle ASM
15:1	109-5668	1	Grip-Control, Lever
16	104-8301	4	Nut-HF, NI
17	323-7	4	Screw-HH
18	109-5575	2	Spring-Leaf
19	109-8106	2	Front Pump Linkage ASM
19:2	3219-2	2	Nut-Hex
19:3	1-323245	2	Spring-Compression
19:4	1-633152	1	Balljoint-LH
19:5	1-543017	1	Balljoint-RH
20	109-9505	4	Washer-Spring
21	3256-6	2	Washer-Flat
22	32128-56	2	Nut-HF
23	3256-23	2	Washer-Plain
24	3218-5	2	Nut-Jam
25	115-1794	2	Screw-HHF

● Use Pro-Lock, Nut Type (P/N 1-840022, .5ml tube) on threads.

Control Console Assembly

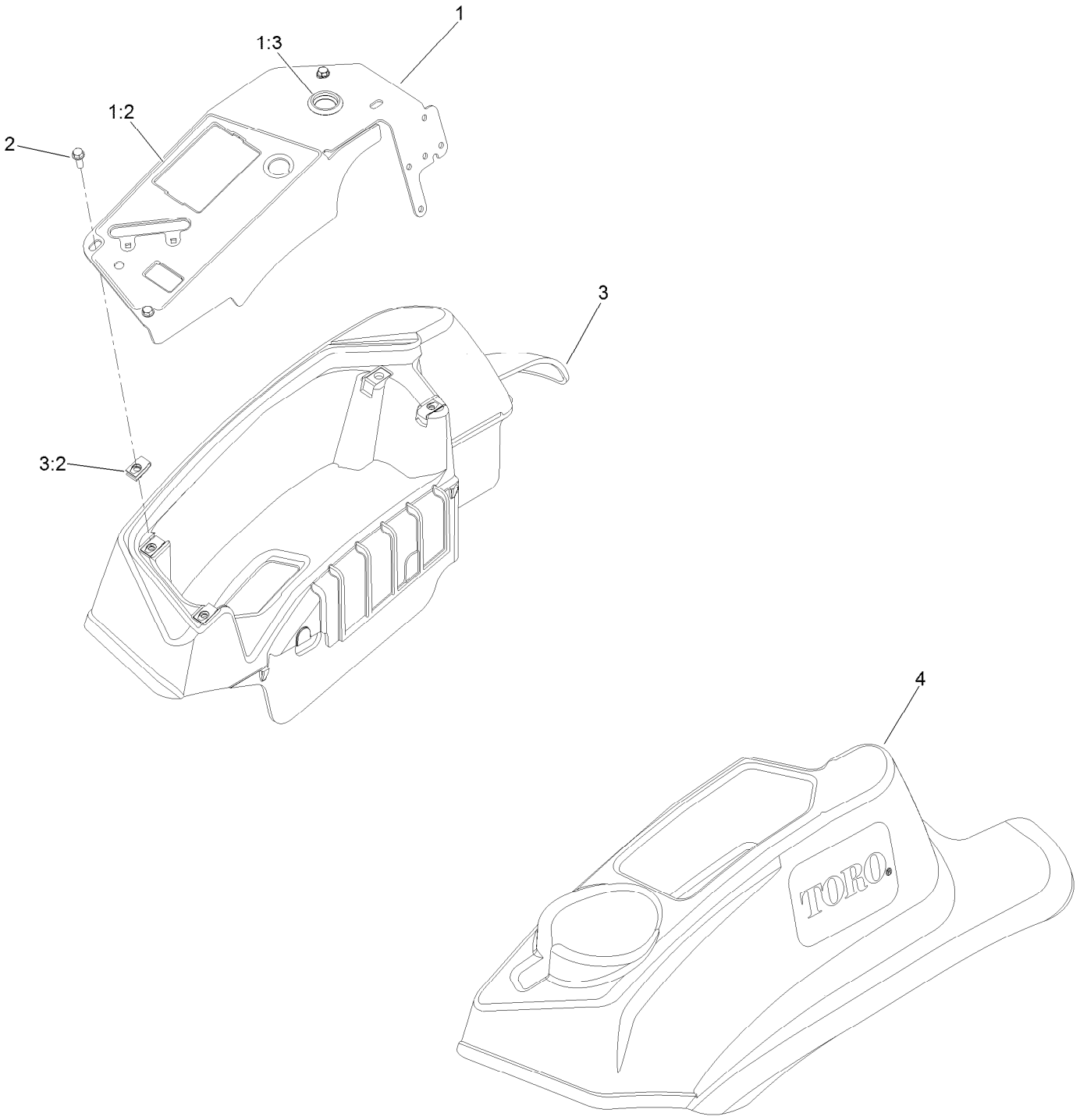

Control Console Assembly (continued)

Ref.	Part Number	Qty.	Description
1	137-9200	1	Control Panel ASM
1:2	137-9208	1	Decal-Panel, Control
1:3	116-1875	1	Plug-Plastic
2	32105-15	4	Screw-HWH
3	119-2603	1	RH Console ASM
3:2	107069	4	Clip
4	119-2602	1	Console-LH

Electrical Assembly

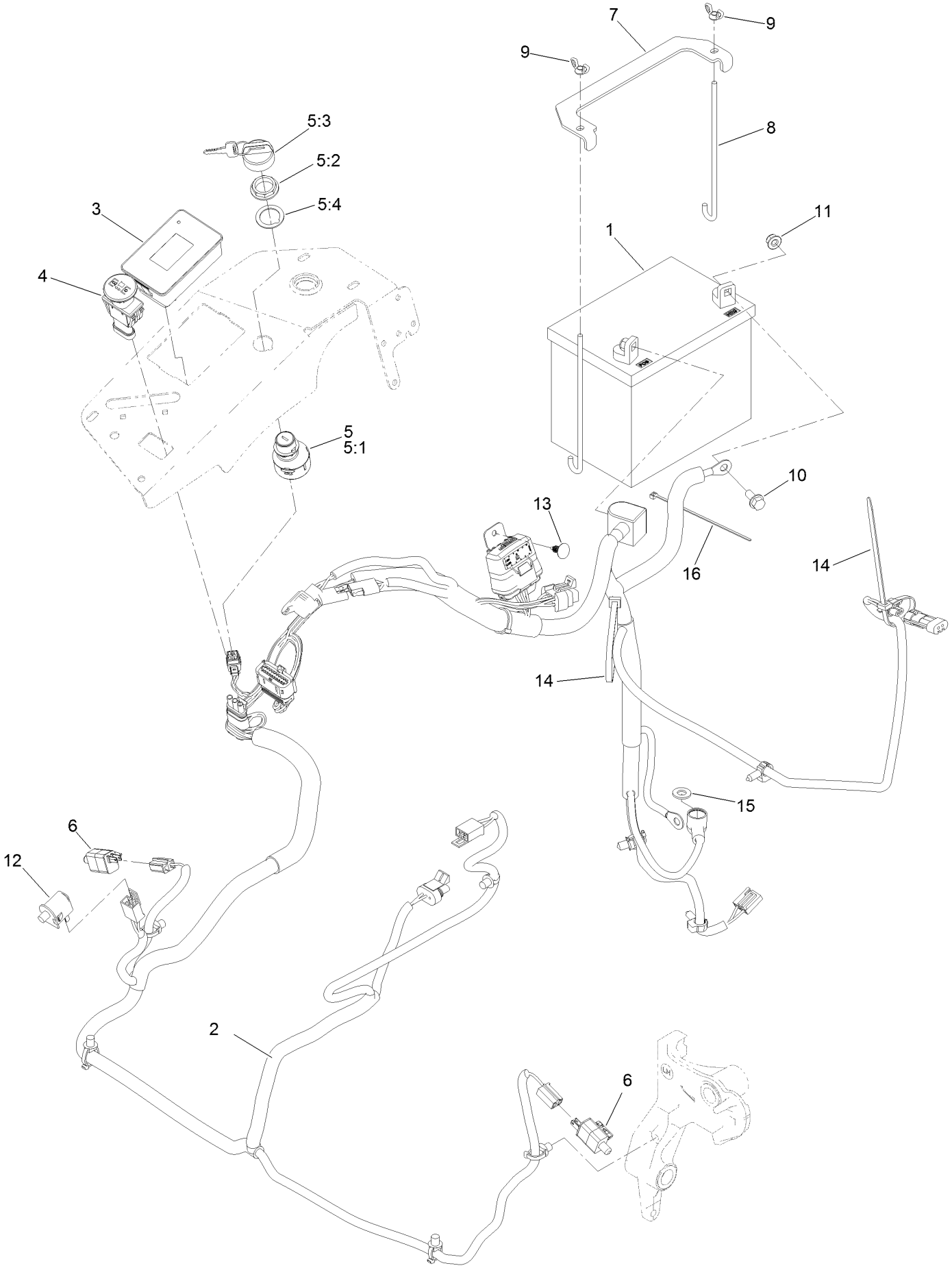

Electrical Assembly (continued)

Ref.	Part Number	Qty.	Description
1	104-8162	1	Battery-Dry
2	126-5875	1	Wire Harness ASM
3	135-2471	1	Meter-Hour
4	126-6187	1	Switch-PTO, Sealed
5	126-6285	1	Ignition Switch ASM
5:1		1	Switch-Ignition ●
5:2	108-8660	1	Nut-Mounting
5:3	106-5270	1	Ignition Key Set
5:4	108-8659	1	Washer-Backup
6	110-6765	2	Switch

Ref.	Part Number	Qty.	Description
7	116-0042-03	1	Strap-Tie Down, Battery
8	1-633651	2	Bolt-Holddown
9	1-543792	2	Wingnut
10	3234-5	2	Screw-HHF
11	104-8300	2	Nut-HF, NI
12	82-2190	1	Switch-Bail
13	117-2382	1	Plug-Plastic
14	1-303335	2	Tie-Plastic
15	3256-24	1	Washer-Flat
16	1-303287	1	Tie-Cable

● Not serviced separately

Wire Harness Assembly No. 126-5875

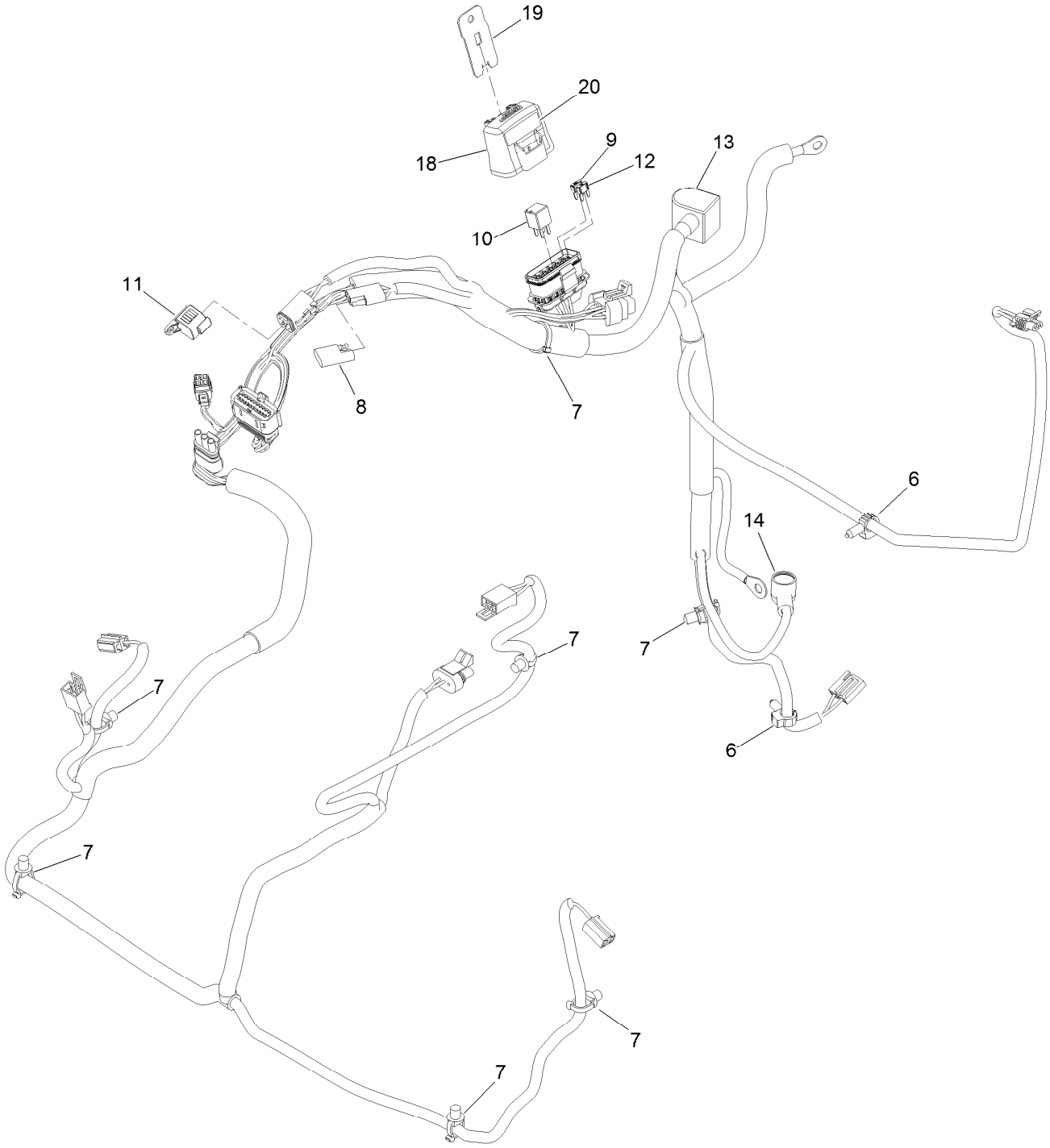

Wire Harness Assembly No. 126-5875 (continued)

Ref.	Part Number	Qty.	Description
6	32180-037	3	Clip-Harness
7	32180-030	6	Clip-Tie
8	32180-197	1	Cap-Plug
9	121-8868	1	Fuse-Mini Blade, 20 Amp
10	126-3991	1	Relay-Micro
11	32180-156	1	Cap-Plug, 6 Way
12	121-8867	1	Fuse-Mini Blade, 15 Amp
13	126-8876	1	Insulator-Battery
14	1-543393	1	Insulator-Solenoid
18	32180-176	1	Cover-Block, Fuse
19	32180-177	1	Clip-Mounting
20	126-7875	1	Decal-Fuse

Deck Lift Assembly

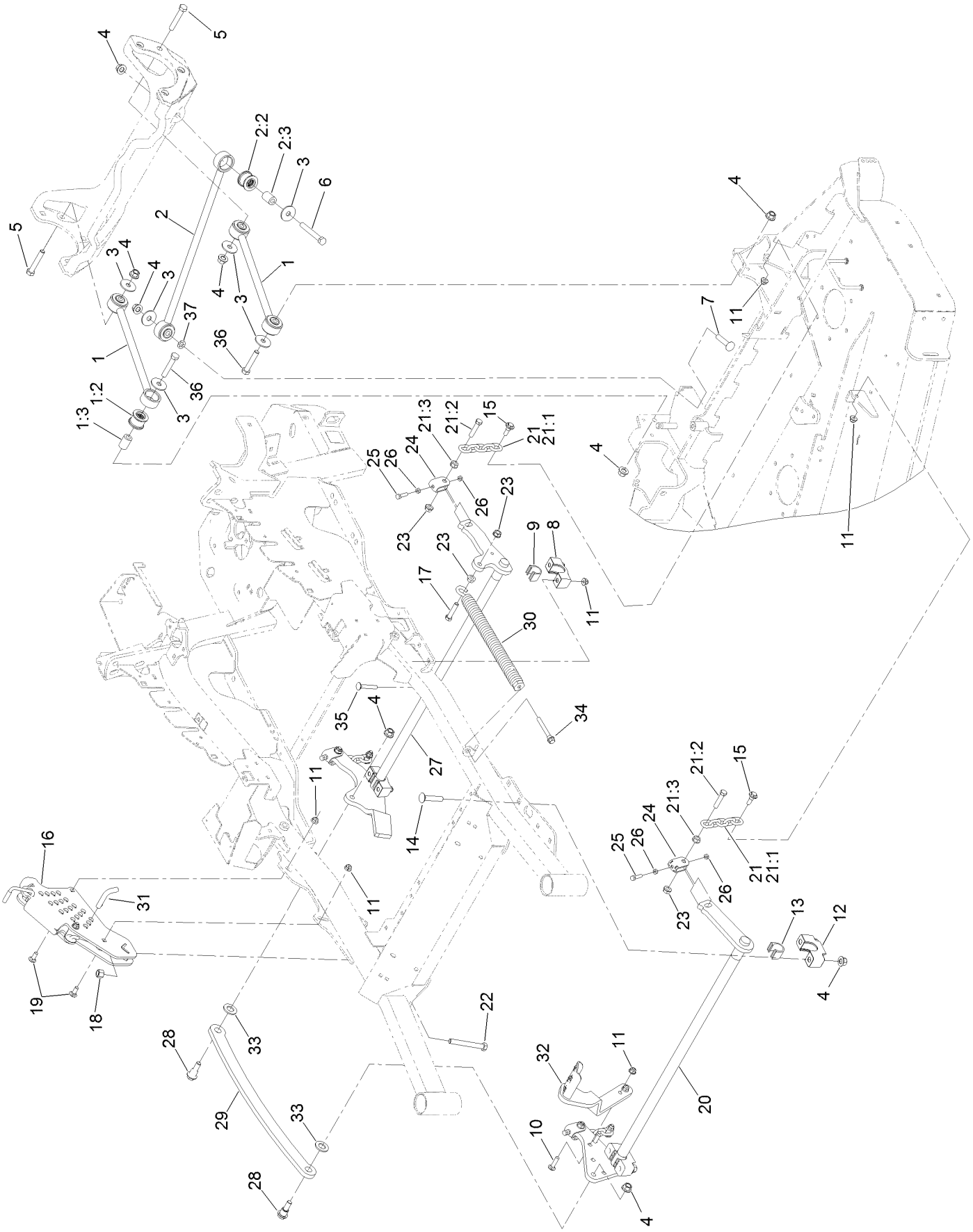

Deck Lift Assembly (continued)

Ref.	Part Number	Qty.	Description
1	109-7952	2	Deck Strut ASM
1:2	109-5009	2	Bushing-Suspension, Rubber
1:3	109-5010	2	Spacer
2	109-5013	1	Panhard Rod ASM
2:2	109-5009	2	Bushing-Suspension, Rubber
2:3	109-5010	2	Spacer
3	86-1990	6	Washer-Thrust
4	99-5107	12	Nut-Lock
5	325-12	2	Screw-HH
6	325-17	1	Screw-HH
7	3233-34	1	Screw-CARR
8	127-0553	2	Support-Cross Shaft, Bearing Rear
9	109-7173	2	Bearing-Cross Shaft, Rear
10	3231-4	2	Screw-CARR
11	104-8301	12	Nut-HF, NI
12	109-9409	2	Support-Cross Shaft, Bearing
13	109-9410	2	Bearing-Cross Shaft, Front
14	116-1700	4	Bolt-CARR
15	109-9840	4	Screw-Shoulder, HHF
16	109-7438	1	HOC ASM
17	109-9065	1	Screw-HH
18	3296-23	1	Nut-Lock, NI
19	3231-2	2	Bolt-CARR
20	126-2475-03	1	Decklift-Front
21	116-0756	4	Deck Lift Chain ASM
21:1	1-633447	1	Chain-Lift, Deck
21:2	109-9065	1	Screw-HH
21:3	32128-37	1	Nut-HF
22	116-0559	1	Bolt-TAP
23	32128-37	6	Nut-HF
24	109-9066	4	Yoke-Adjust, Deck
25	322-47	4	Screw-HH
26	3218-2	8	Nut-Jam
27	116-0459-03	1	Lift-Deck, Rear
28	116-0780	2	Screw-Shoulder, HHF
29	116-0797-03	1	Link-Lift, Deck
30	116-0000	1	Spring-Extension
31	116-5584	1	Pin-HOC
32	116-1919-01	1	Lever-Foot
33	3256-28	2	Washer-Flat
34	92-7674	1	Bolt-Shoulder
35	3231-7	4	Screw-CARR
36	325-11	2	Screw-HH
37	126-2916	1	Nut-Push

Height-of-Cut Assembly No. 109-7438

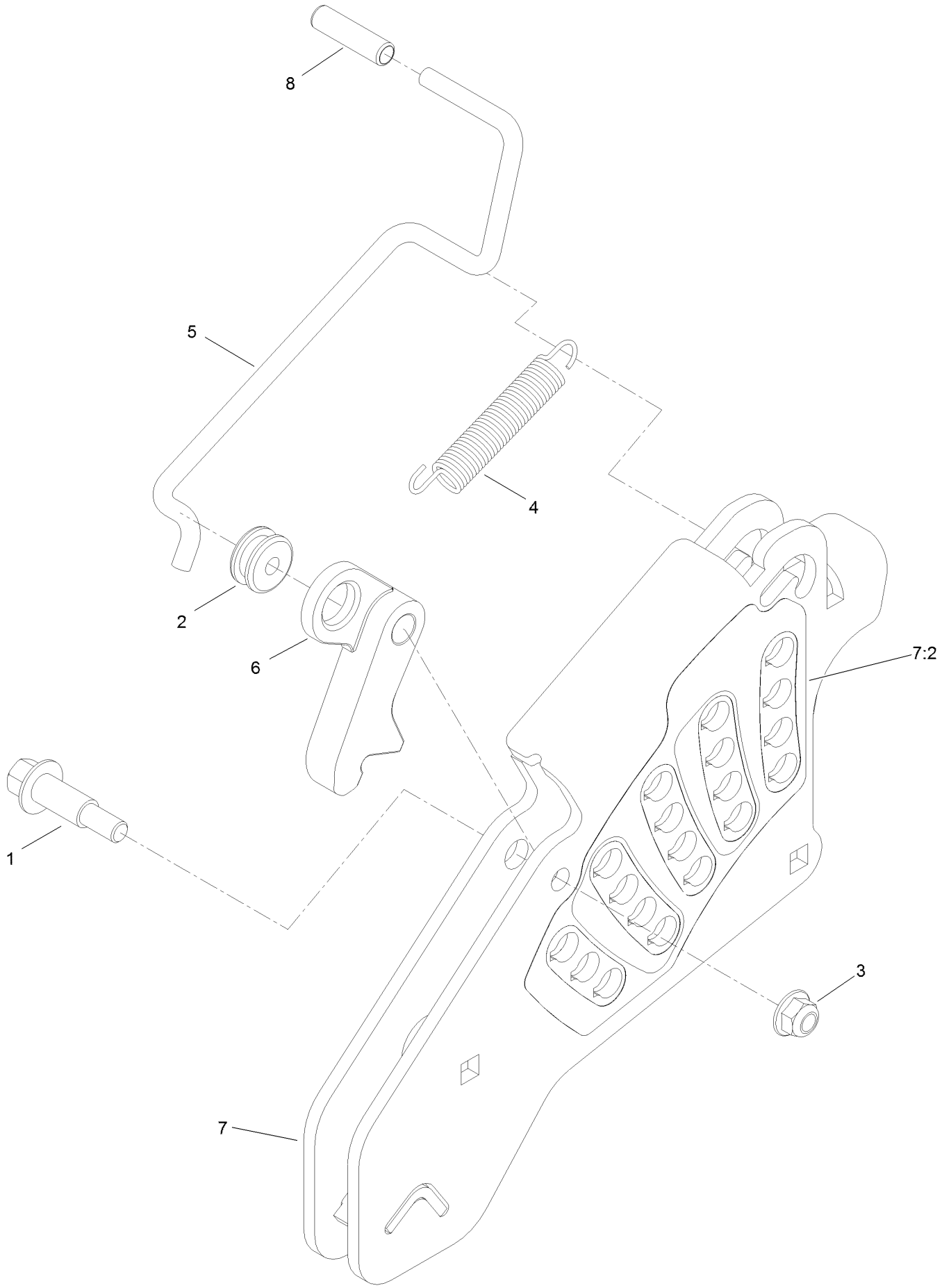

Height-of-Cut Assembly No. 109-7438 (continued)

Ref.	Part Number	Qty.	Description
1	62-1330	1	Bolt-Shoulder
2	109-7130	1	Grommet
3	104-8301	1	Nut-HF, NI
4	109-7124	1	Spring-Extension
5	109-7128	1	Rod-Lock, Transport
6	116-0118	1	Pawl-Transport, HOC
7	109-7335	1	HOC Plate ASM
7:2	126-4398	1	Decal-HOC
8	109-8250	1	Grip-Lever

Engine Assembly

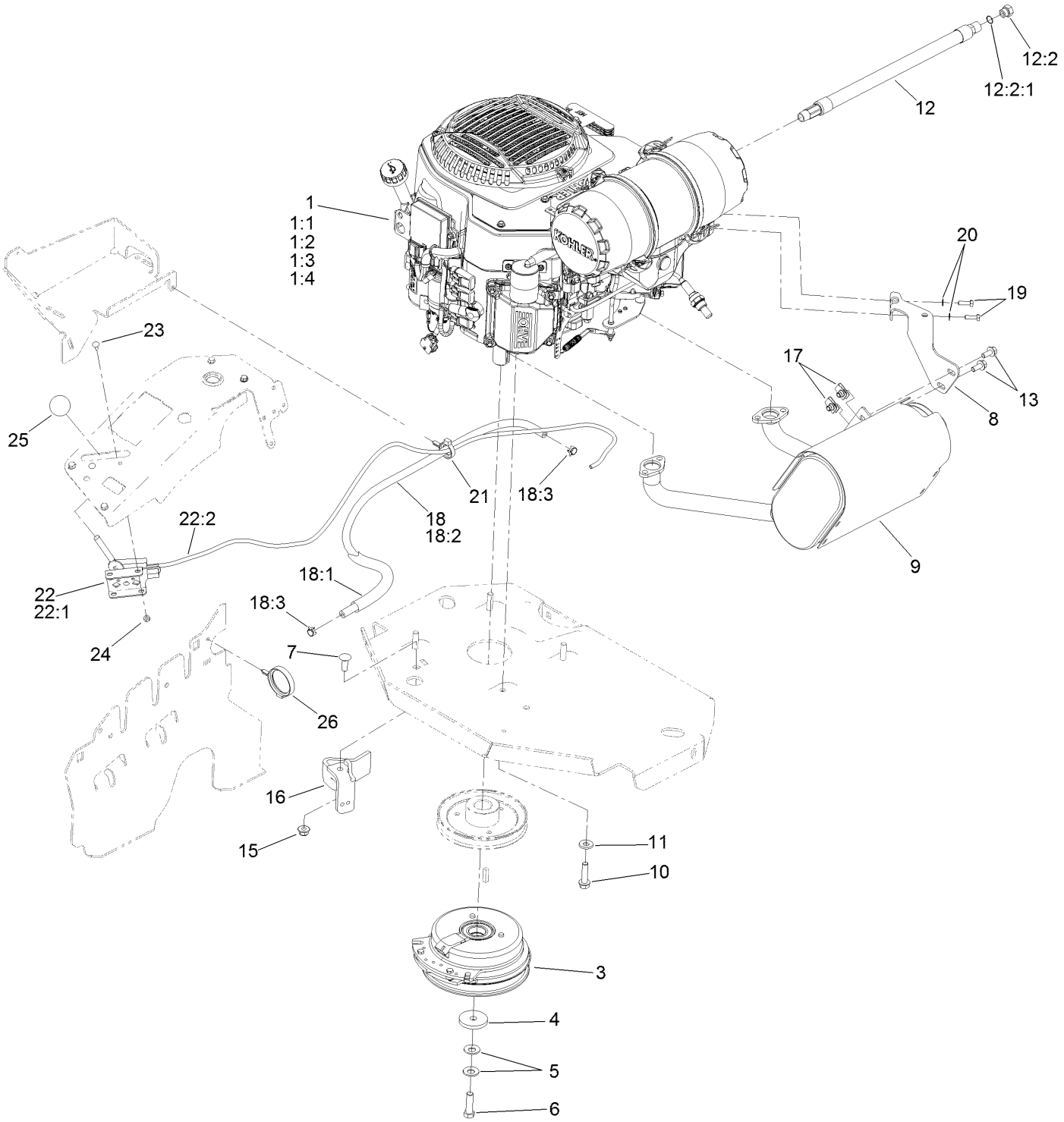

Engine Assembly (continued)

Ref.	Part Number	Qty.	Description
1		1	Engine-Kohler Ecv740 ▲◆
1:1		1	Kohler 52 050 02-S Engine Oil Filter ▲◆
1:2		1	Kohler 25 083 01-S Engine Air Filter ▲◆
1:3		1	Kohler 25 083 04-S Safety Filter ▲◆
1:4	135-2483	1	Kohler 25 050 42-S Fuel Filter
3	116-1620	1	Clutch Kit
4	109-6919	1	Washer-Clutch
5	1-603610	2	Washer-Spring
6	109-9761	1	Screw-HH ❑
7	3231-22	1	Screw-CARR
8	116-4297	1	Muffler Bracket Kit
9	135-2127	1	Muffler Kit
10	32144-102	4	Screw-HWH
11	98-5975	4	Washer-Belleville
12	116-5316	1	Oil Drain Hose ASM ■
12:2	353-508	1	Plug-HH ●
12:2:1	237-42	1	O-Ring
13	3234-5	2	Screw-HHF
15	104-8301	1	Nut-HF, NI
16	116-2612-01	1	Clutch-Anchor
17	94-2413	2	Nut-U
18	117-3893	1	Fuel Line ASM
18:1	109-0273	1	Hose-Fuel
18:2	117-3892	1	Sleeve-Thermal
18:3	2412-98	2	Clamp-Hose
19	116-4295	2	Screw-HH
20	1-303435	2	Washer-Spring
21	105-1853	1	Clamp-Hose
22	115-2752	1	Throttle Control ASM
22:1	112-2334	1	Lever-Throttle
22:2	115-3868	1	Cable-Throttle
23	1-807513	2	Bolt-CARR
24	3296-2	2	Nut-Lock, NI
25	1-603175	1	Knob-Ball
26	117-7817	1	Clamp-Harness

● Torque to 24-26 ft-lb
▲ Not serviced separately
❑ Use Pro-Lock, Nut Type (P/N 1-840022, .5ml tube) on threads.
■ Torque to 17-23 ft-lb
◆ Obtain parts from www.kohlerplus.com

Deck Assembly

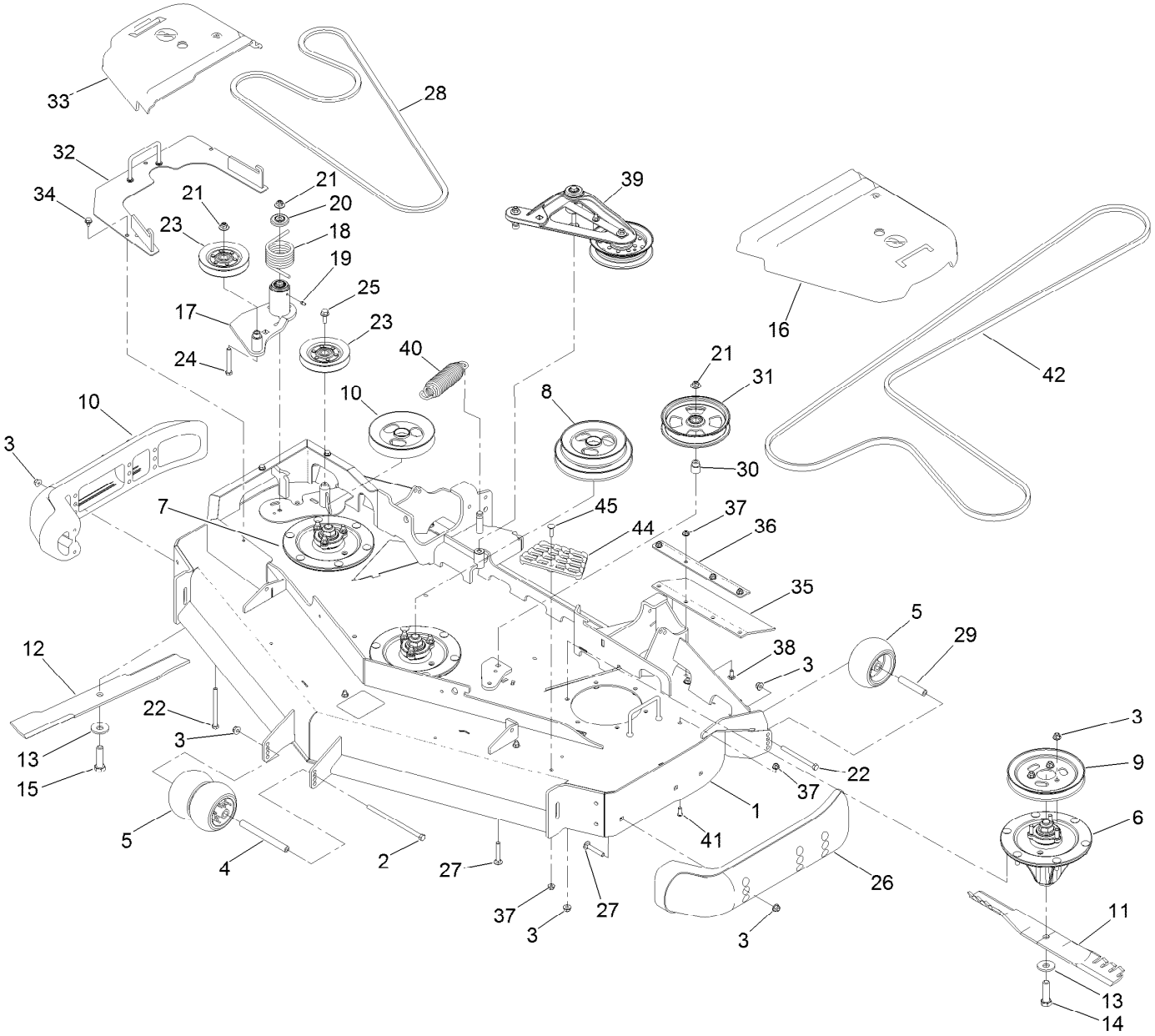

Deck Assembly (continued)

Ref.	Part Number	Qty.	Description
1	136-8646	1	Deck Decal ASM
2	108-5388	1	Screw-HH
3	104-8301	36	Nut-HF, NI
4	98-5967	1	Spacer-Wheel
5	1-603299	4	Roller-Scalp, Anti
6	127-0560	2	Spindle ASM
7	127-0570	1	LH Spindle ASM
8	125-9317	1	Pulley
9	105-7734	1	Pulley
10	125-9316	1	Pulley
11	105-8777-03	2	Blade-Atomic, 20.5In
12	125-9329-01	1	Blade-Rotary, 20.5In Low Flow
13	103-0865	3	Washer-Blade Bolt, Heavy
14	51-4060	2	Screw-Blade
15	125-9326	1	Screw-Blade, LH
16	109-6938	1	Cover-Belt, LH
17	126-0853	1	Idler ASM
18	108-1921	1	Spring-Torsion
19	302-19	1	Fitting-Grease
20	103-2916	1	Guard-Top
21	109-6658	3	Nut-Flange, NI
22	323-23	3	Screw-HH
23	126-1478	2	Sheave
24	323-13	1	Screw-HH
25	3234-11	1	Screw-HHF
26	112-1479	2	Skid-Bumper, Deck
27	3231-7	7	Screw-CARR
28	116-8187	1	Belt
29	98-7912	2	Tube-Spanner
30	1-633456	1	Bushing, Idler
31	136-5404	1	Pulley-Idler, Flat
32	116-8195-01	1	Cover-Drive Reverse
33	116-8190	1	Cover-Belt, RH
34	9266934	3	Screw
35	116-8191	2	Guard-Tire
36	126-0413-01	2	Support-Outer Flap
37	104-8300	15	Nut-HF, NI
38	3230-16	8	Screw-CARR
39	126-1720	1	Deck Idler ASM
40	116-6317	1	Spring-Extension
41	3274-55	6	Screw-HSBH
42	125-9371	1	Belt
44	126-4781-03	1	Step-Deck
45	3230-3	1	Screw-CARR

Deck Decal Assembly No. 136-8646

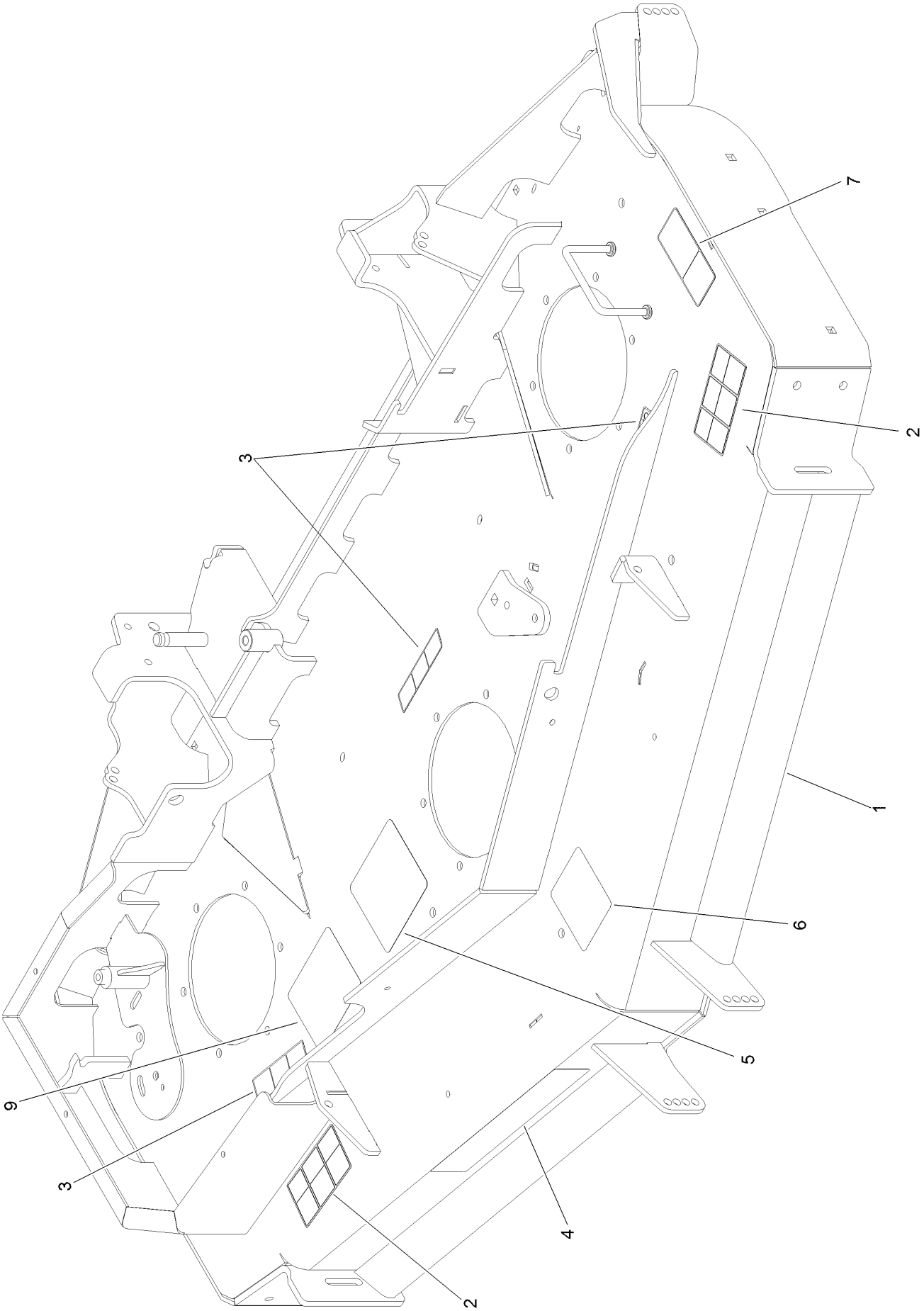

Deck Decal Assembly No. 136-8646 (continued)

Ref.	Part Number	Qty.	Description
1		1	Deck Decal ASM ●
2	117-3848	2	Decal-Danger
3	112-9028	3	Decal-Missing, Cover
4	107-1619	1	Decal
5	136-5522	1	Decal-Routing, Deck Belt
6	109-6036	1	Decal-Roller, Anti-Scalp
7	93-7818	1	Decal-Torque, Blade Bolt
9	127-6661	1	Decal-Spindle, Counter Rotating

● Not serviced separately

Spindle Assembly No. 127-0560

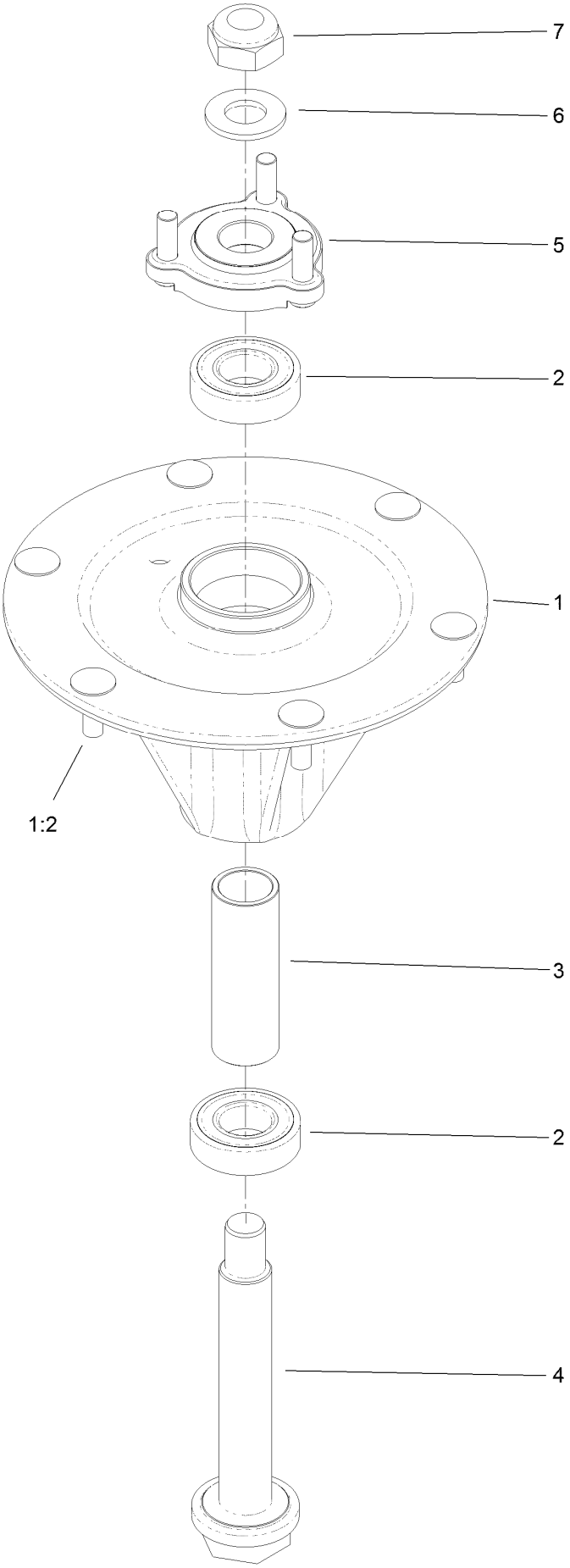

Spindle Assembly No. 127-0560 (continued)

Ref.	Part Number	Qty.	Description
1		1	Spindle Housing ASM W/Studs ●
1:2	114-8195	6	Bolt-Ribbed Neck
2	116-0720	2	Bearing-Ball
3	127-0554	1	Spacer-Bearing
4	127-0556	1	Shaft-Spindle, Ball Bearing
5	127-0557	1	Hub-Spindle (W/Studs)
6	92-5836	1	Washer
7	3296-67	1	Nut-Lock, NI

● Not serviced separately

LH Spindle Assembly No. 127-0570

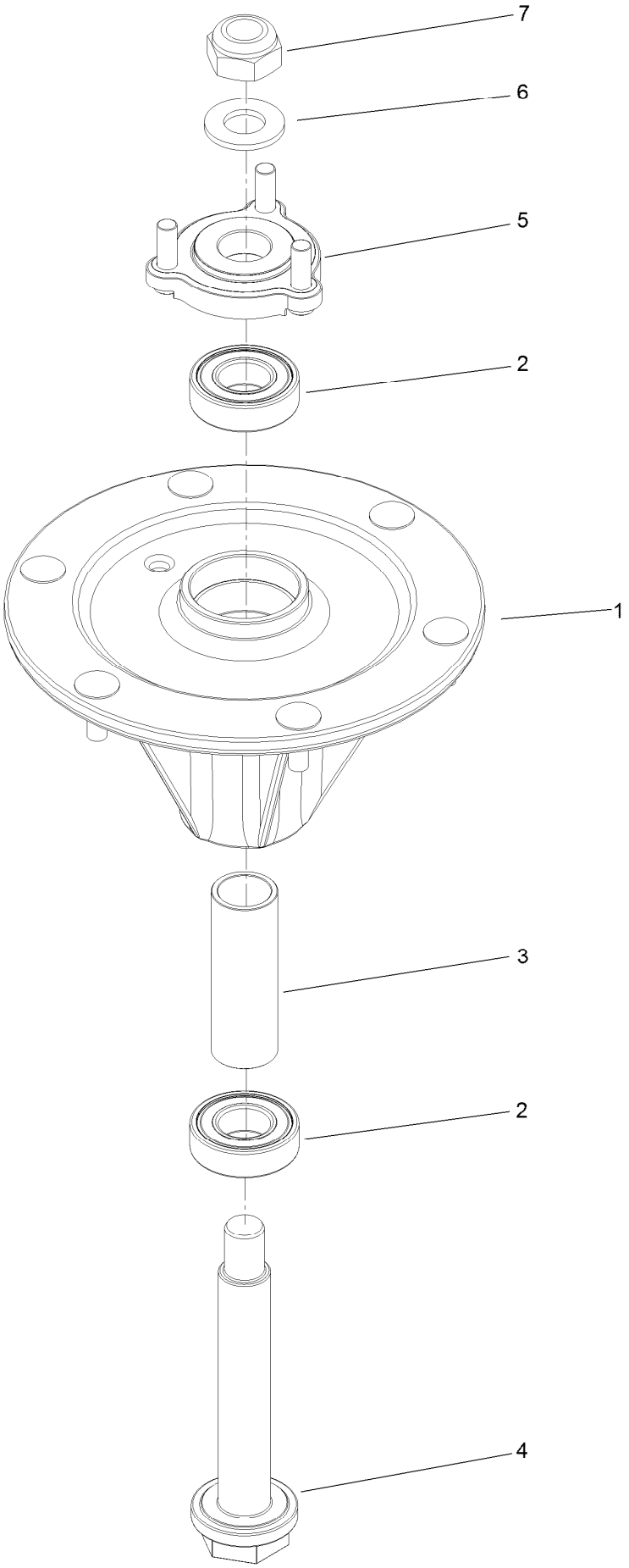

LH Spindle Assembly No. 127-0570 (continued)

Ref.	Part Number	Qty.	Description
1	127-0569	1	Housing-Spindle, LH (W/Studs)
2	116-0720	2	Bearing-Ball
3	127-0554	1	Spacer-Bearing
4	127-0567	1	Shaft-LH, Spindle-Ball Bearing
5	127-0557	1	Hub-Spindle (W/Studs)
6	92-5836	1	Washer
7	125-9325	1	Nut-Lock,NI Left Hand Thread

Idler Assembly No. 126-0853

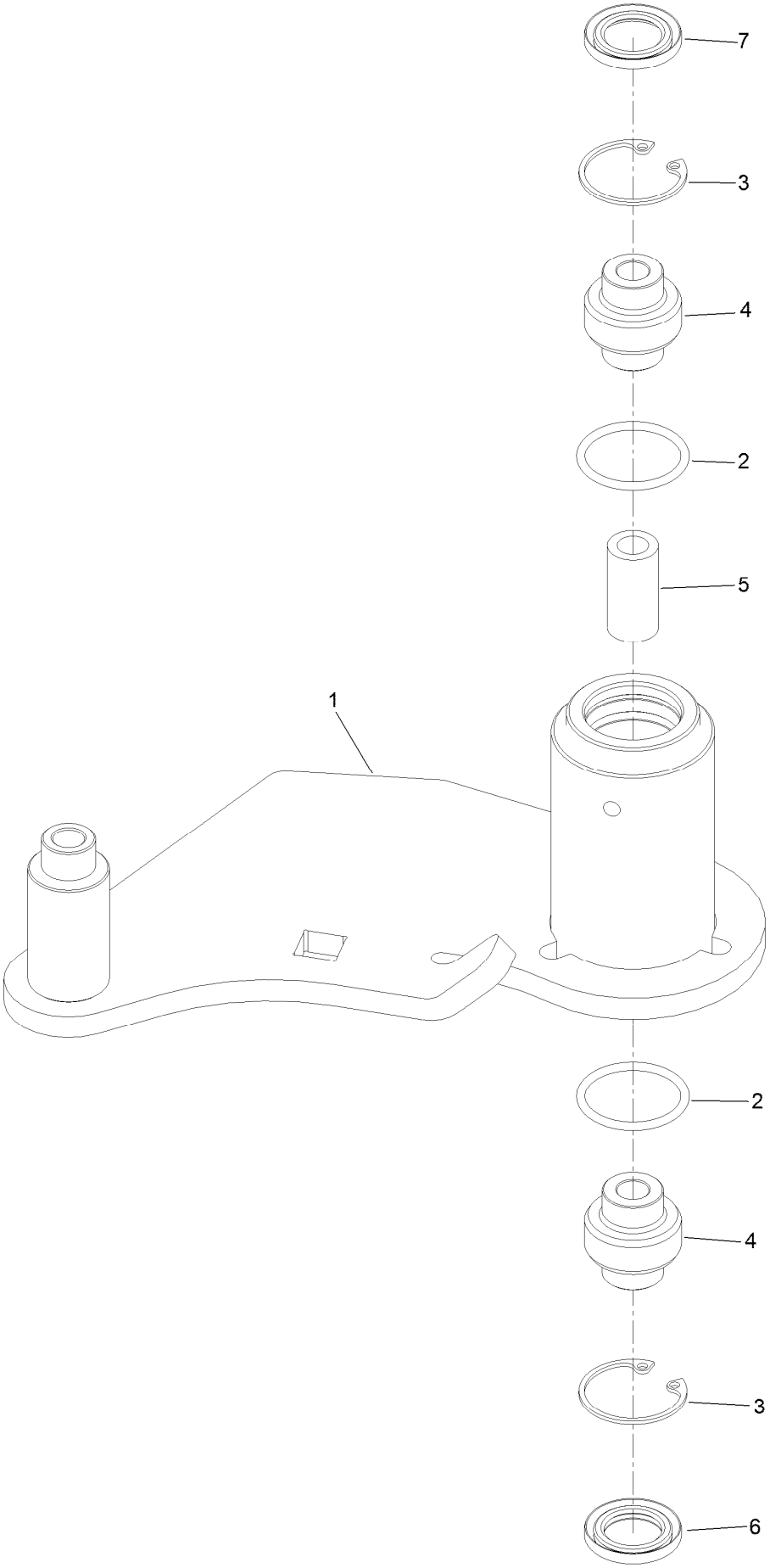

Idler Assembly No. 126-0853 (continued)

Ref.	Part Number	Qty.	Description
1		1	Idler-Deck ●
2	106-7159	2	O-Ring
3	32120-10	2	Ring-Snap
4	103-3504	2	Bearing-Spherical
5	108-6544	1	Spacer
6	103-3505	1	Seal-Lip, Double
7	103-3506	1	Seal-Lip, Single

● Not serviced separately

Deck Idler Assembly No. 126-1720

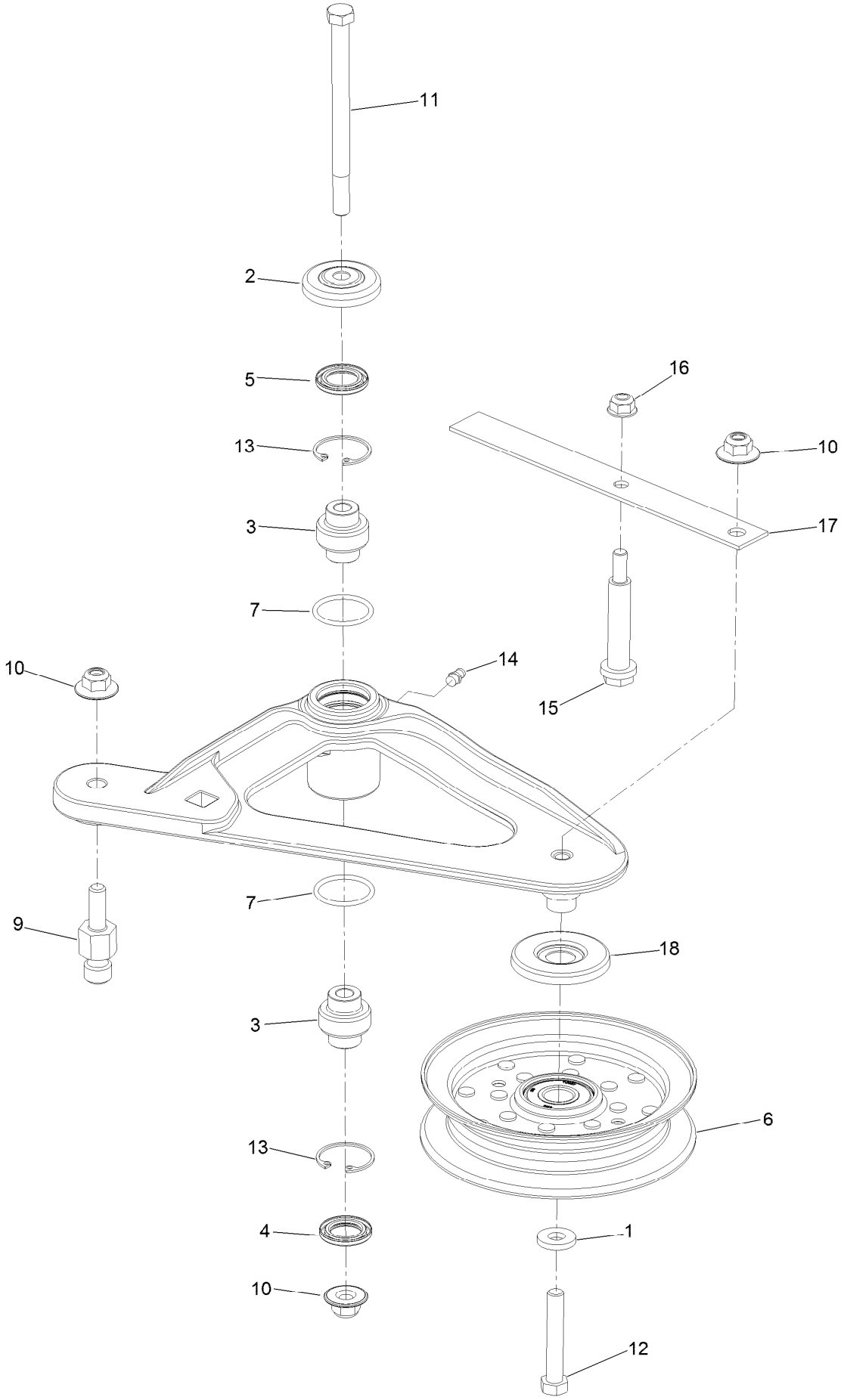

Deck Idler Assembly No. 126-1720 (continued)

Ref.	Part Number	Qty.	Description
1	43-0940	1	Spacer
2	103-2916	1	Guard-Top
3	103-3504	2	Bearing-Spherical
4	103-3505	1	Seal-Lip, Double
5	103-3506	1	Seal-Lip, Single
6	126-9196	1	Idler-Pulley, Flat
7	106-7159	2	O-Ring
9	126-0423	1	Pin-Spring, Anchor
10	109-6658	3	Nut-Flange, NI
11	109-7409	1	Screw-Shoulder, HH
12	104-3396	1	Screw-HH
13	32120-10	2	Ring-Snap
14	302-19	1	Fitting-Grease
15	88-4590	1	Bolt-Shoulder
16	104-8300	1	Nut-HF, NI
17	126-1704	1	Spring-Belt
18	126-9195	1	Shield-Guard, Dust

Rear Discharge Tunnel Assembly

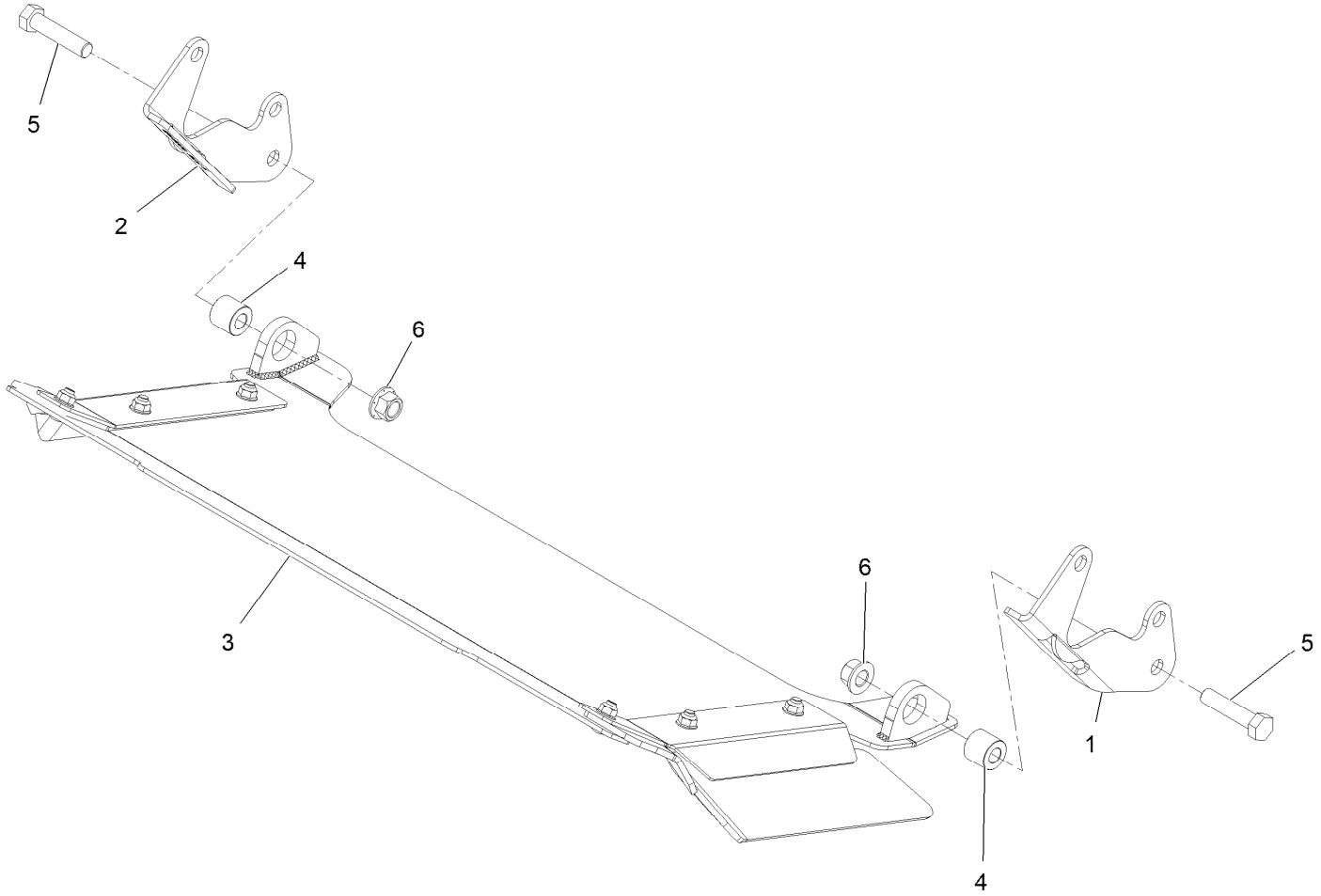

Rear Discharge Tunnel Assembly (continued)

Ref.	Part Number	Qty.	Description
1	125-9369-03	1	Bracket-Discharge Mount, LH
2	125-9370-03	1	Bracket-Discharge Mount, RH
3	126-4930	1	Discharge Tunnel ASM
4	126-1705	2	Bushing-Sleeve
5	325-9	2	Screw-HH
6	99-5107	2	Nut-Lock

Discharge Tunnel Assembly No. 126-4930

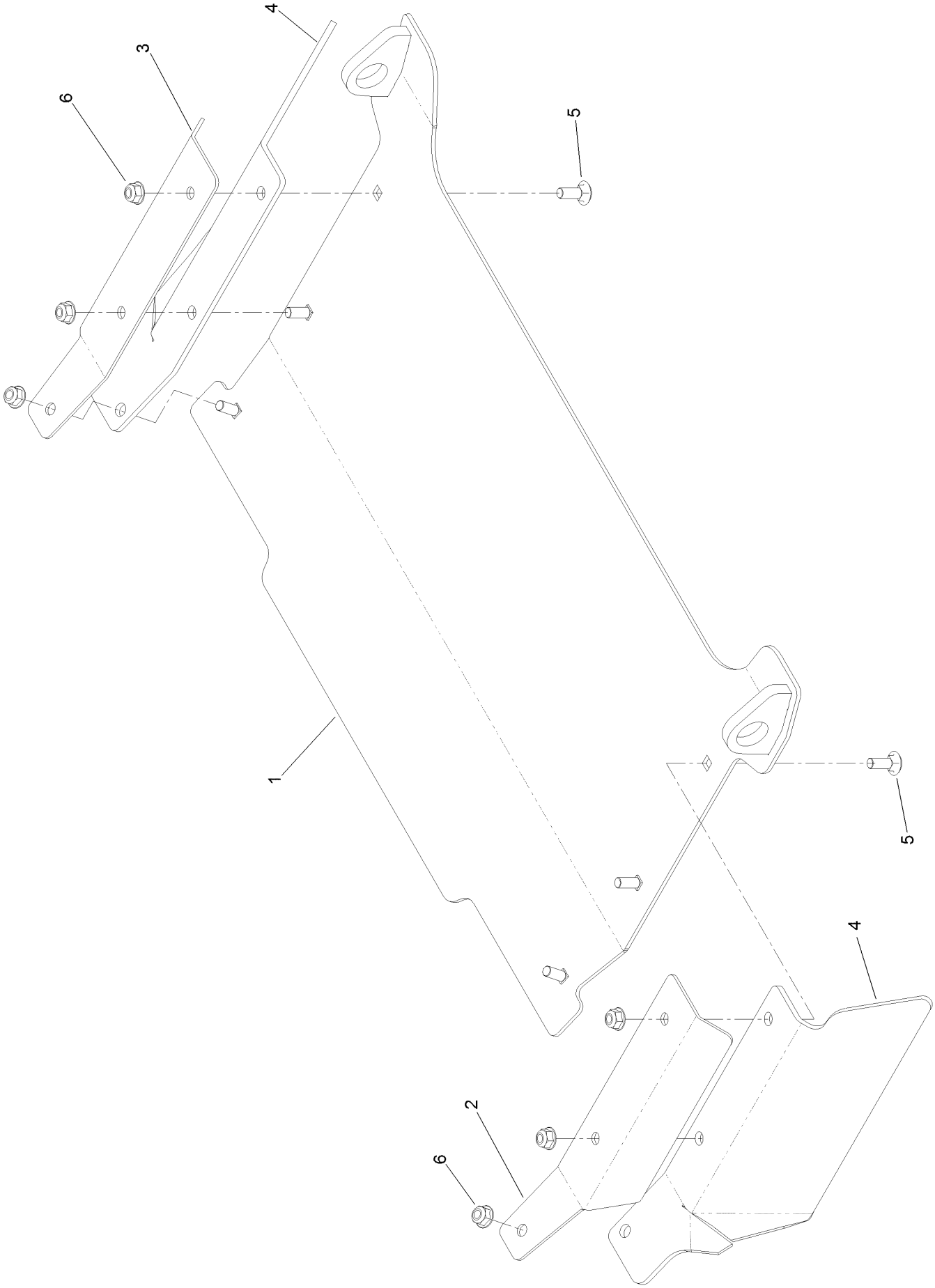

Discharge Tunnel Assembly No. 126-4930 (continued)

Ref.	Part Number	Qty.	Description
1	126-4929-03	1	Discharge Tunnel ASM
2	125-9366-03	1	Bracket-Flap, LH
3	125-9367-03	1	Bracket-Flap, RH
4	125-9368	2	Flap-Rubber
5	3230-16	6	Screw-CARR
6	104-8300	6	Nut-HF, NI

Frame Decal Assembly

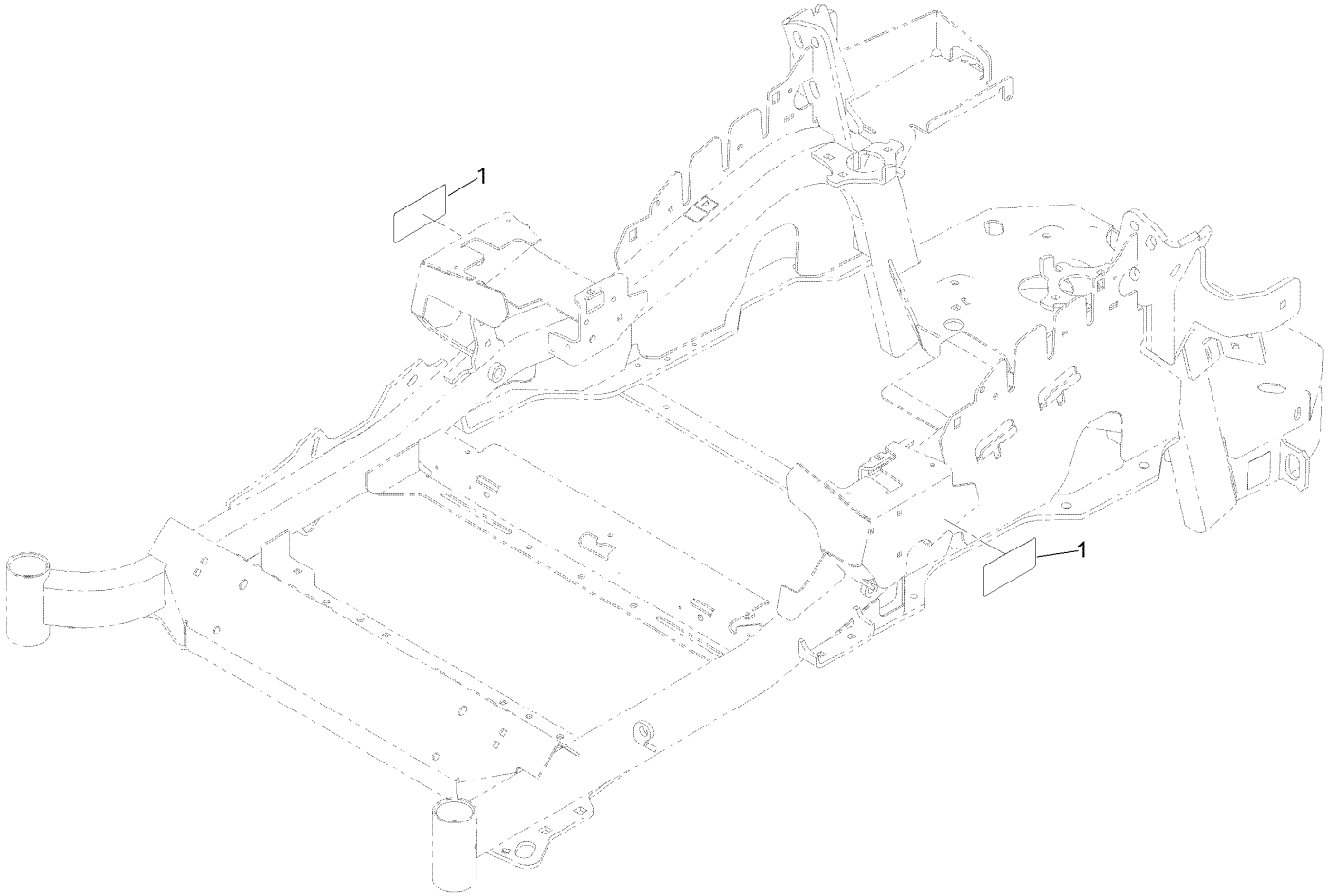

Frame Decal Assembly (continued)

Ref.	Part Number	Qty.	Description
1	120-5894	2	Decal

Attachments and Accessories

For 74943 Z Master Professional 5000 Series Riding Mower with 60in TURBO FORCE Rear Discharge Mower

Product Name	Model/Part
Deluxe Seat Kit	121-7595
Seat Cover W/arm rest	117-0095
Power Deck Lift Kit	132-5986
Jack Kit	127-6666
Light Kit	116-1154
Hitch Kit	109-9487
Trash Holder Kit	TC26
Hypr-Oil 500 (quart)	114-4713
Hypr-Oil 500 (gallon)	114-4714
Hypr-Oil 500-5 (5 gallon)	114-4715
Blade-Atomic, 20.5in	105-8777-03
6 Pack-Blade, 20.5in Atomic	108-1115
Filter Minder Gauge	99-4664
Toro Deluxe Rider Cover	490-7319
Spark Arrestor Screen	75-6880
Seat Tilt Frame And Iso Mount Kit	121-7596
Bimini Folding Shade Assembly	115-4510
Baffle Kit	125-9305
Anti-Scalp and Wear Bar Kit	127-6650
Deck Skid Bumper	126-0854
Jack Mount Kit	127-6665
Counter Rotating Rotary Blade 20.5in Low Flow	125-9329-01

Notes:

TORO®

Count on it.