Form No. 3417-822 Rev A

TORO®

Count on it.

Parts Catalog

Z Master® Professional 7000 Series Riding Mower

With 72in TURBO FORCE® Side Discharge Mower

Model No. 74274—Serial No. 402090000 and Up

Register at www.Toro.com.
Original Instructions (EN)

3417-822 A

Ordering Replacement Parts

To order replacement parts, please supply the part number, the quantity, and the description of each part desired.

Understanding Reference Numbers

Each identified part in an illustration has a reference number. The reference number for a part also appears in the parts list, along with other information about the part.

This catalog uses two special reference number formats, one to indicate parts in a service assembly and another to indicate the quantity of a given part in an illustration.

Service Assembly Reference Numbers

Parts in service assemblies have reference numbers in the form a:b. The a represents the reference number of the entire service assembly and the b represents a sequential number unique to each part within the service assembly.

For example, a wheel assembly might be identified by reference number 6, the tire by 6:1, the valve by 6:2, and the wheel by 6:3. When you order the assembly identified by reference number 6, you receive all parts identified by reference numbers 6:1,6:2, and 6:3. However, you may also order any part individually. Reference numbers of this type appear in illustration and in parts lists.

Reference Numbers Indicating Quantity

In an illustration, if a reference number indicates more than one part, the reference number has the form nX y. The n represents the quantity of the part, the X is the multiplication symbol, and the y represents the reference number.

For example, in an illustration, the reference number 2X 37 means that two of the parts identified by reference number 37 are indicated.

Contents

Front Frame Assembly . . . 5
Fork and Caster Wheel Assembly . . . 7
Traction Frame and Floor Pan Assembly . . . 8
Seat and Roll-Over Protection System Assembly . . . 9
Seat Assembly No. 125-3107 . . . 10
Roll-Over Protection System Assembly No. 117-3866 . . . 11
Main Frame and Rear Wheel Assembly . . . 12
Hydro Control Assembly . . . 14
Engine, Exhaust and Air Intake Assembly . . . 16
Air Cleaner Assembly No. 93-2190 . . . 17
Hydro and Gearbox Assembly . . . 18
Gearbox Assembly No. 107-9887 . . . 20
Hydraulic Tank, Pump and Motor Assembly . . . 21
Tandem Pump Assembly No. 107-9885 . . . 23
Hydraulic Motor Assembly No. 112-8357 (CCW) . . . 24
Hydraulic Motor Assembly No. 112-8358 (CW) . . . 25
Hydraulic Hose Assembly . . . 26
Fuel System and Throttle Control Assembly . . . 27
Fuel Line Assembly . . . 29
Engine Housing Assembly . . . 30
Cooling System Assembly . . . 31
Hood Assembly . . . 32
Deck Connection Assembly . . . 33
Deck Assembly . . . 34
Spindle Assembly No. 127-0560 . . . 36
Deck Decal Assembly No. 114-4483 . . . 37
Rubber Deflector Assembly No. 108-2792 . . . 38
Electrical Assembly . . . 39
Crankcase Assembly . . . 41
Oil Pan, Oil Pump and Dipstick Assembly . . . 42
Cylinder Head Assembly . . . 43
Gear Case and Oil Filter Cartridge Assembly . . . 44
Cylinder Head Cover Assembly . . . 45
Main Bearing Case Assembly . . . 46
Camshaft and Idle Gear Shaft Assembly . . . 47
Piston and Crankshaft Assembly . . . 48
Fuel Camshaft Assembly . . . 49
Idle Apparatus Assembly . . . 50
Stop Solenoid and Fuel Pump Cover Assembly . . . 51
Injection Pump Assembly . . . 52
Governor Assembly . . . 53
Speed Control Plate Assembly . . . 54
Nozzle Holder and Glow Plug Assembly . . . 55
Nozzle Holder Assembly . . . 56
Alternator and Pulley Assembly . . . 58
Alternator Components Assembly . . . 59
Starter and Flywheel Assembly . . . 60
Starter Component Assembly . . . 61
Water Flange and Thermostat Assembly . . . 62
Water Pump and Water Pipe Assembly . . . 63
Valve and Rocker Arm Assembly . . . 64
Inlet and Exhaust Manifold Assembly . . . 65
Miscellaneous Engine Parts . . . 66
Upper Engine Gasket Kit . . . 67

© 2017—The Toro® Company

8111 Lyndale Avenue South
Bloomington, MN 55420

Contact us at www.Toro.com.
Printed in the USA.

All Rights Reserved

Contents (continued)

Lower Engine Gasket Kit 68
Attachments and Accessories 69

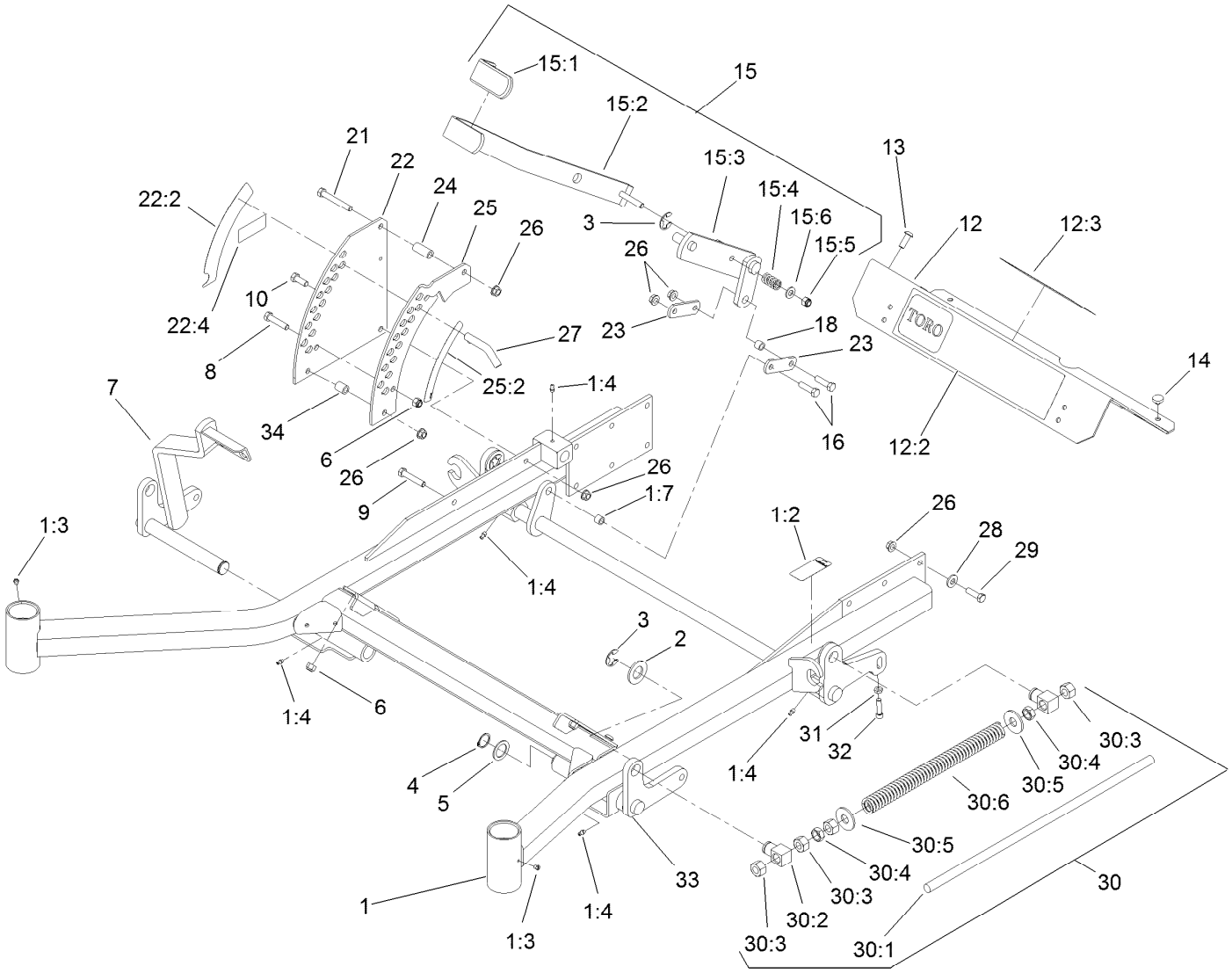

Front Frame Assembly

Ref.	Part Number	Qty.	Description
1	114-1248	1	Frame ASM
1:2	107-3968	1	Decal-Brake, Parking
1:3	1-811010	2	Plug
1:4	302-19	5	Fitting-Grease
1:7	103-1918	1	Bushing
2	3256-29	4	Washer-Flat
3	32151-103	5	Ring-Retaining, EXT
4	32151-29	2	Ring-Retaining
5	1-523157	2	Washer-Spacer
6	3296-39	5	Nut-Lock, NI
7	108-7786-01	1	Lift-Deck, RH Front
8	323-9	1	Screw-HH
9	323-10	1	Screw-HH
10	323-5	1	Screw-HH
12	107-3976	1	Footrest
12:2	136-5521	1	Decal
12:3	132-0871	1	Decal-Danger
13	3274-94	4	Screw-HSBH

Ref.	Part Number	Qty.	Description
14	1-513658	2	Bumper
15	110-5860	1	Deck Lift Handle ASM
15:1	1-633295	1	Grip-Lever, Lift
15:2	103-2083-03	1	Lever-Lift
15:3	103-2064-03	1	Arm-Lift, Deck
15:4	1-633325	1	Spring-Compression
15:5	3296-39	1	Nut-Lock, NI
15:6	3256-24	1	Washer-Flat
16	323-29	2	Screw-HH
18	103-1918	1	Bushing
21	323-11	1	Screw-HH
22	117-0366	1	Plate-HOC, Outer
22:2	107-1860	1	Decal-Height, Deck
22:4	117-2718	1	Decal-Arrester, Spark
23	1-633068	2	Arm-Lift, Deck
24	1-633082	1	Bushing-Lever, Lift
25	117-0369	1	Plate-HOC, Inner
25:2	107-1861	1	Decal-Height, Deck

● Not serviced separately

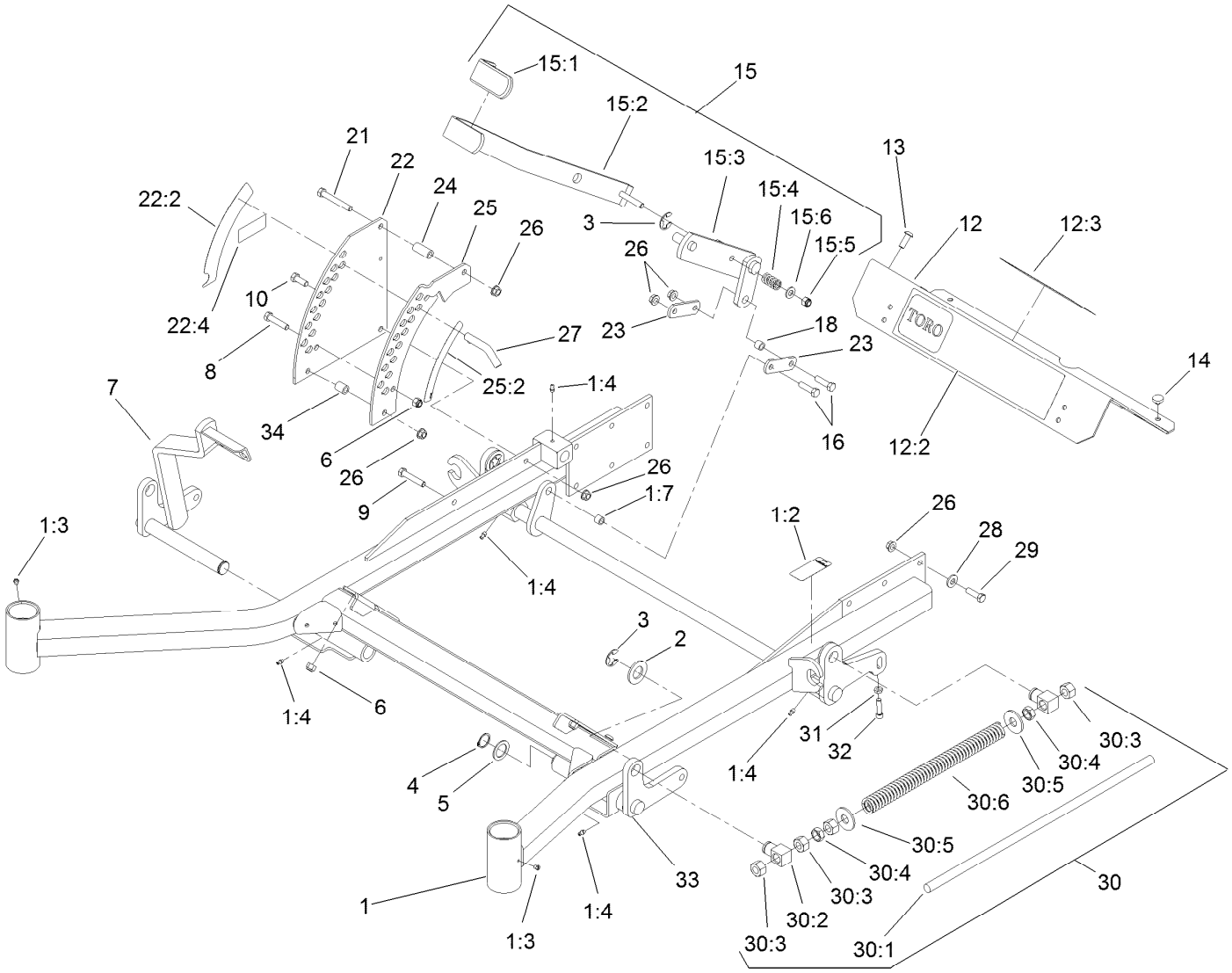

Front Frame Assembly (continued)

Ref.	Part Number	Qty.	Description
26	3290-357	17	Nut-HHF, Whiz
27	109-8757	1	Pin-HOC
28	98-5975	12	Washer-Belleville
29	323-7	12	Screw-HH
30		2	Front Frame Spring ASM ●
30:1	1-633096	1	Rod-Lift, Deck
30:2	1-633441	2	Swivel-Deck Mount, Rear
30:3	3217-11	3	Nut-Hex

Ref.	Part Number	Qty.	Description
30:4	3218-6	3	Nut-Jam
30:5	3256-7	2	Washer-Flat
30:6	1-643015	1	Spring-Support, Deck
31	3218-2	2	Nut-Jam
32	3274-18	2	Screw-HSH
33	106-8984-01	1	Lift-Deck, LH
34	1-633080	1	Bushing-Lever, Lift

● Not serviced separately

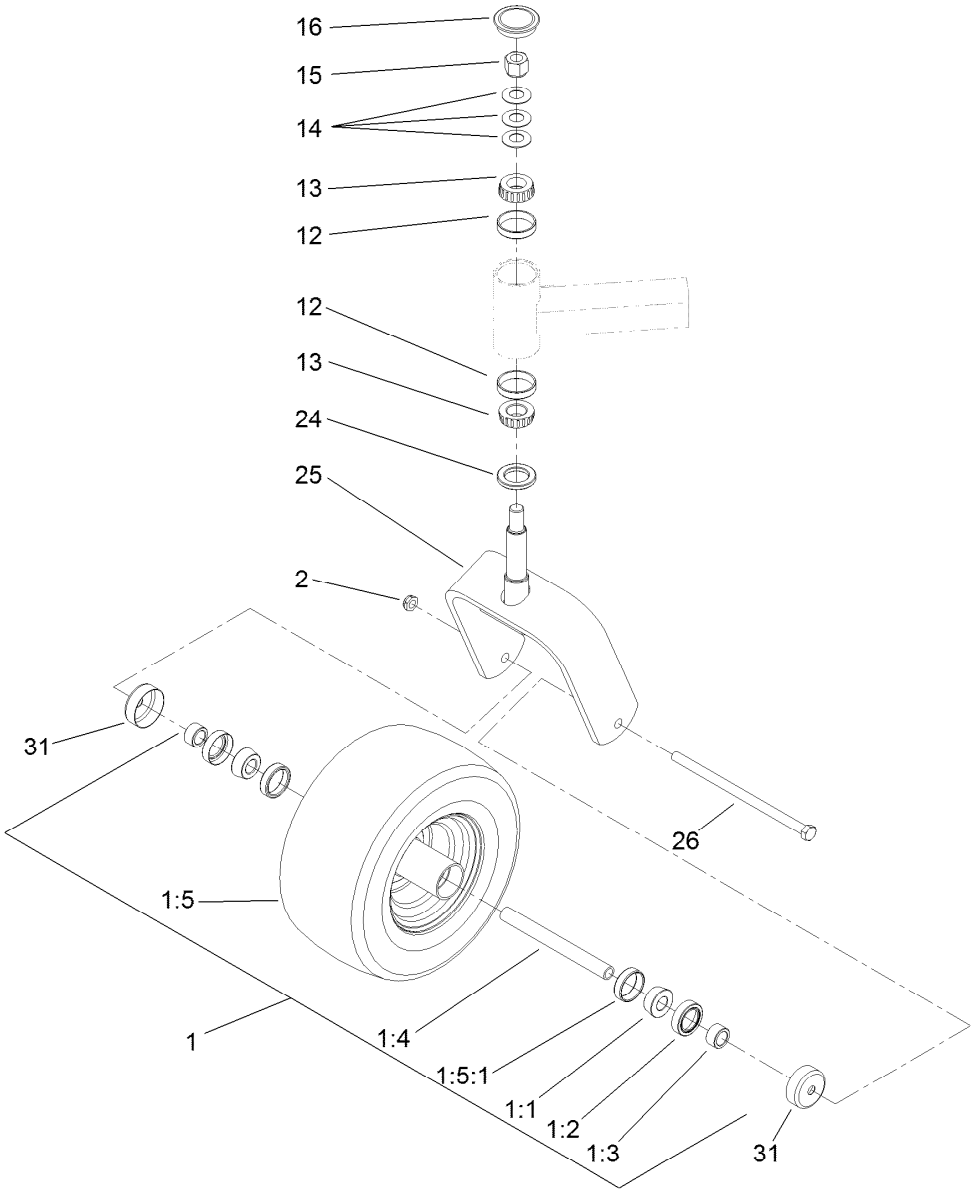

Fork and Caster Wheel Assembly

Ref.	Part Number	Qty.	Description
1	127-9526	2	Wheel And Bearing ASM
1:1	1-633585	2	Bearing-Cone, Taper
1:2	103-0063	2	Seal-Caster
1:3	103-3051	1	Spacer-Nut ■
1:4	126-5361	1	Axle Caster ASM
1:5		1	Wheel And Tire ASM ●
1:5:1	1-633584	2	Bearing-Cup
2	3296-45	2	Nut-Lock, NI
12	254-72	4	Bearing-Cup, Tapered
13	254-94	4	Bearing-Cone, Tapered
14	1-633508	6	Washer-Bellville
15	3296-51	2	Nut-Lock, NI
16	103-4882	2	Cap-Grease
24	116-5647	2	Seal-Grease
25	116-6707-01	2	Caster
26	325-39	2	Screw-HH
31	103-2768	4	Guard-Seal

● Not serviced separately
■ Use Pro-Lock, Nut Type (P/N 1-840022, .5ml tube) on threads.

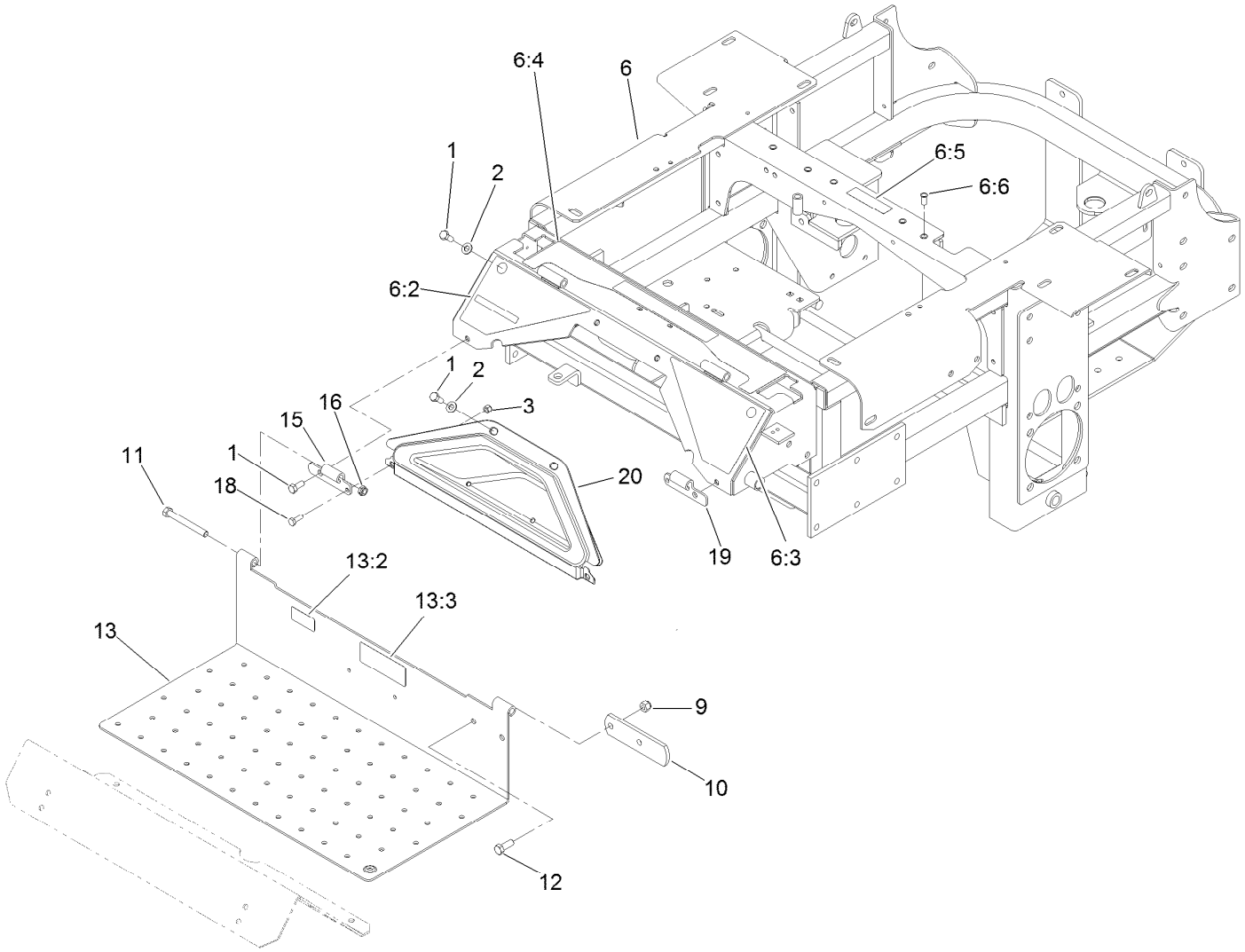

Traction Frame and Floor Pan Assembly

Ref.	Part Number	Qty.	Description
1	322-43	6	Screw-HH
2	3256-70	4	Washer-Flat
3	3296-42	2	Nut-Lock, NI
6	131-7712	1	Traction Frame ASM
6:2	107-3963	1	Decal-Danger, Left
6:3	107-3964	1	Decal-Warning, Right
6:4	110-0820	1	Decal-Console, Top (CE)
6:5	112-9028	1	Decal-Missing, Cover
6:6	32148-11	5	Insert-Threaded
9	3296-39	2	Nut-Lock, NI
10	1-633964-03	1	Stop-Brake, Park

Ref.	Part Number	Qty.	Description
11	323-20	2	Screw-HH
12	323-6	2	Screw-HH
13	115-3851	1	Floor Pan ASM
13:2	98-4387	1	Decal-Protection, Ear
13:3	121-7559	1	Decal-Diesel, Bio-Ready
15	106-7488-03	1	Hinge-Floorpan, LH
16	3296-59	2	Nut-Lock, NI
18	321-4	2	Screw-HH
19	106-7489-03	1	Hinge-Floorpan, RH
20	106-7498	1	Pocket

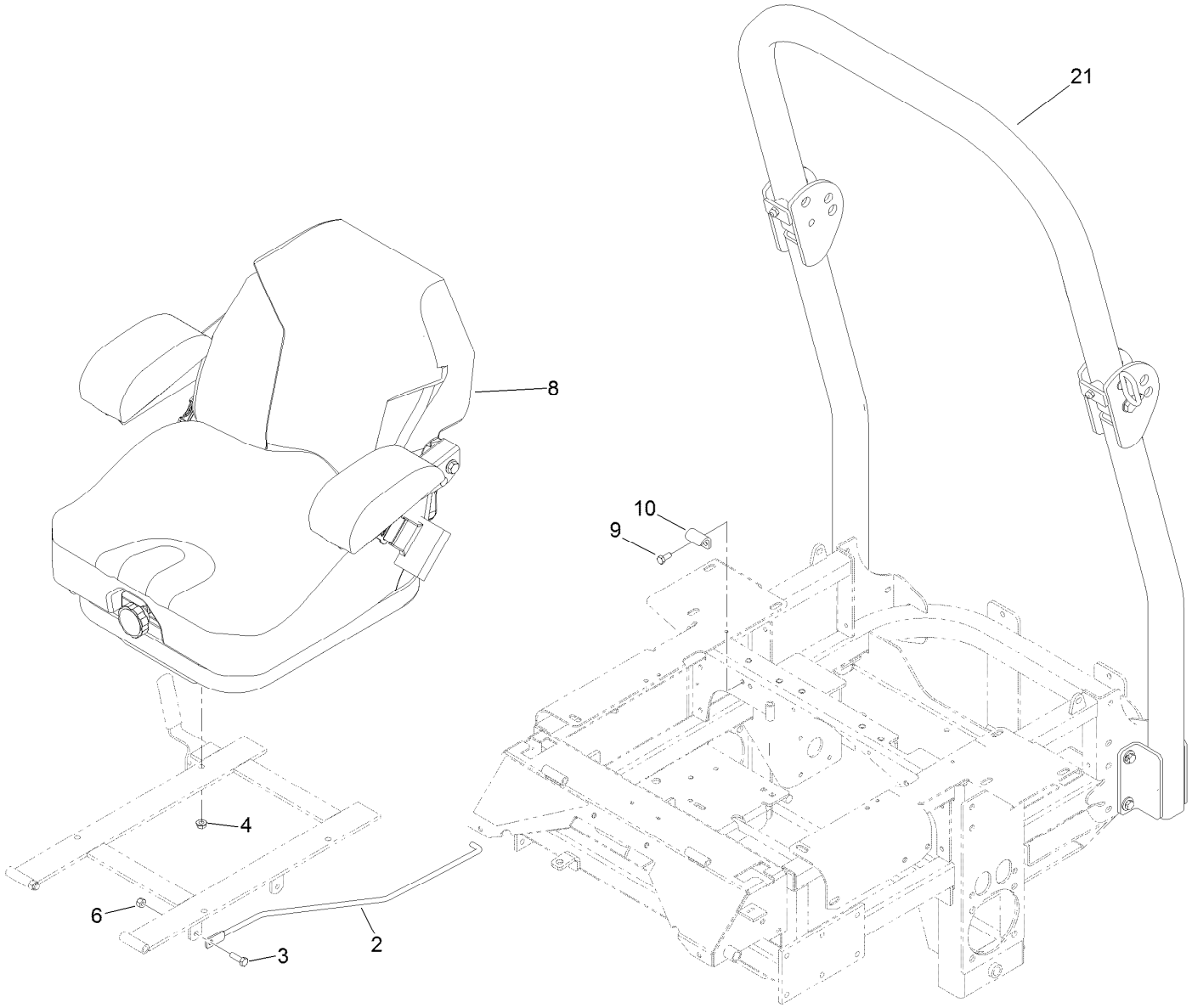

Seat and Roll-Over Protection System Assembly

Ref.	*Part Number*	*Qty.*	*Description*
2	108-5341	1	Rod-Prop, Seat
3	322-5	1	Screw-HH
4	32128-20	4	Nut-HF
6	3296-29	3	Nut-Lock, NI
8	125-3107	1	Suspension Seat ASM
9	322-3	2	Screw-HH
10	107-3058	1	Catch-Latch, Seat
21	117-3866	1	ROPS Kit

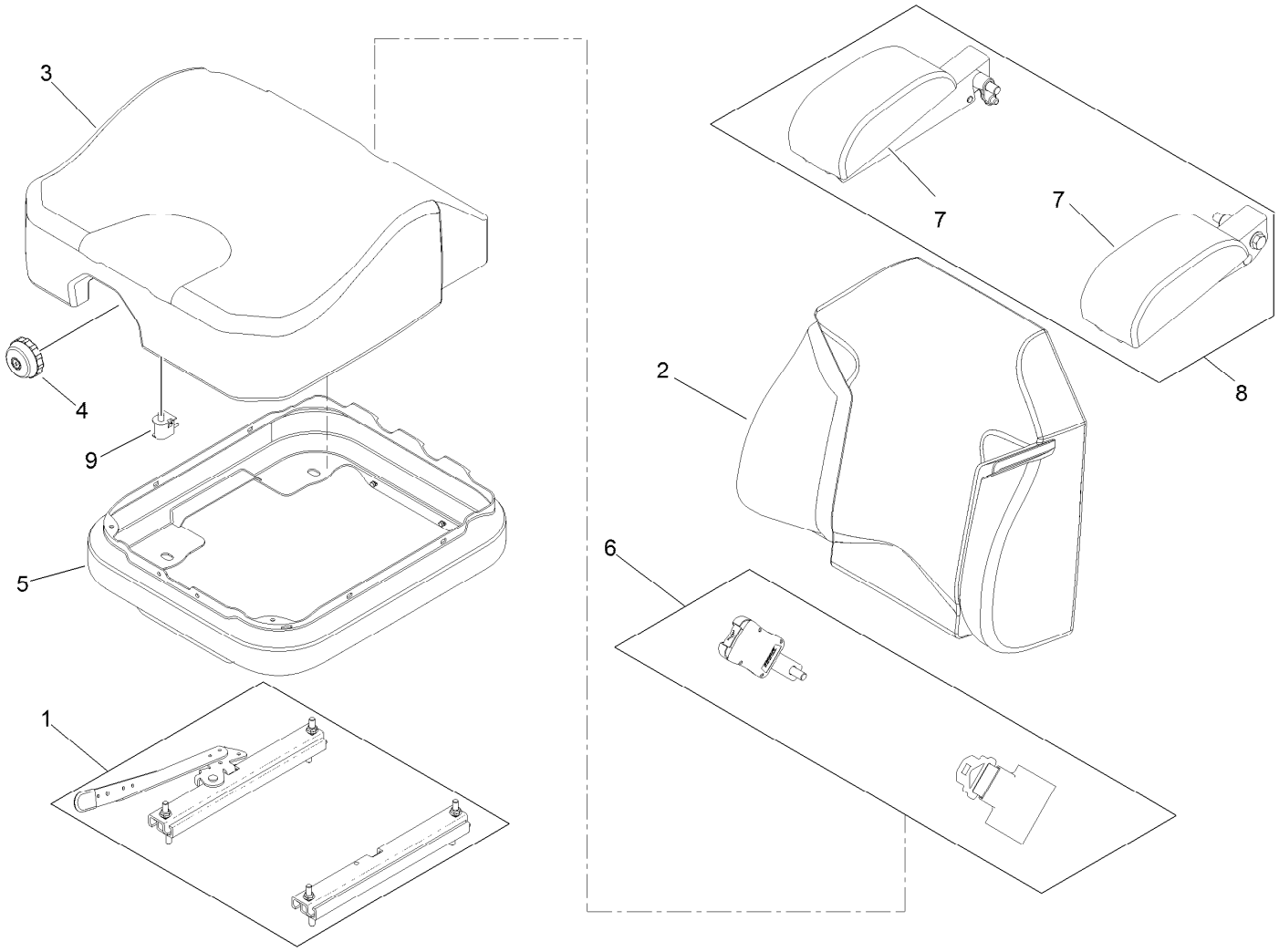

Seat Assembly No. 125-3107

Ref.	*Part Number*	*Qty.*	*Description*
1	116-8910	1	Seat Track Set
2	125-3112	1	Cover-Back
3	125-3111	1	Cover-Cushion
4	116-8911	1	Knob-Adjuster
5	116-5659	1	Cover-Suspension Bellows
6	126-2061	1	Seat Belt Service Kit
7	109-9802	1	Arm Rest Pad Set
8	109-9803	1	Arm Rest Set
9	82-2190	1	Switch-Bail

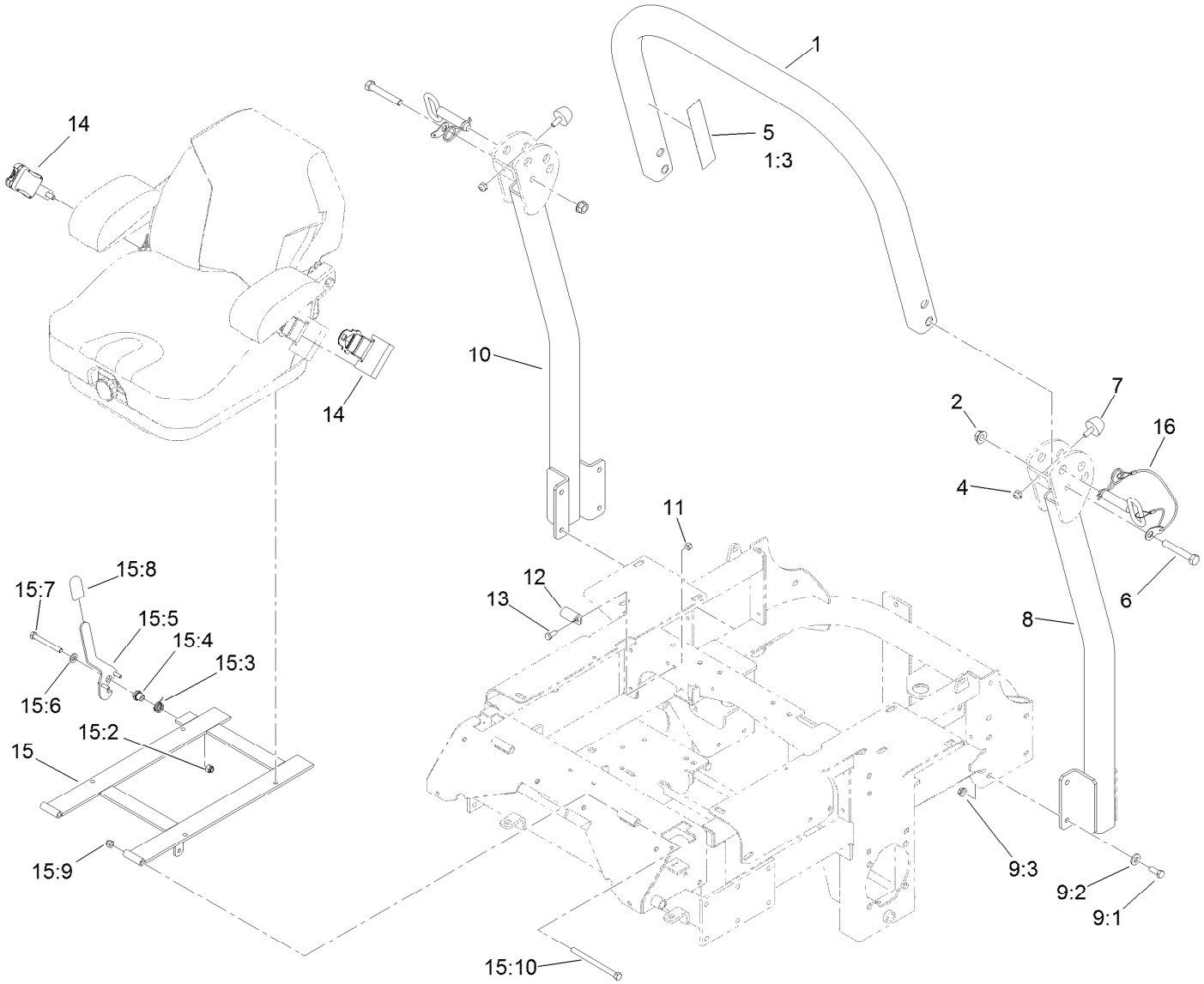

Roll-Over Protection System Assembly No. 117-3866

Ref.	Part Number	Qty.	Description
1		1	Upper Tube ASM ■
1:3	107-2102	1	Decal-Warning, Folding ROPS
2	32128-23	2	Nut-HF
4	3296-73	2	Nut-Lock, NI
5	107-3069	1	Decal-Warning
6	325-13	2	Screw-HH
7	109-2365	2	Bumper-Rubber
8		1	Tube-Support, LH ■
9		1	Bag-Bolt, ROPS ● ■
9:1	323-6	8	Screw-HH
9:2	98-5975	8	Washer-Belleville
9:3	3290-357	8	Nut-HHF, Whiz
10		1	Tube-Support, RH ■
11	3296-29	2	Nut-Lock, NI
12	107-3058	1	Catch-Latch, Seat
13	322-3	2	Screw-HH
14	109-9805	1	Seat Belt Kit
15	110-0874	1	Seatframe ASM
15:2	3296-39	1	Nut-Lock, NI
15:3	107-0076	1	Spring-Torsion
15:4	107-0075	1	Bushing-Latch, Seat
15:5	107-3083	1	Latch ASM
15:6	3256-24	1	Washer-Flat
15:7	323-20	1	Screw-HH
15:8	103-4434	1	Grip-Lever
15:9	3296-39	2	Nut-Lock, NI
15:10	323-39	2	Screw-HH
16	103-4553	2	Pin-Fold, ROPS

● Not illustrated

■ Not serviced separately

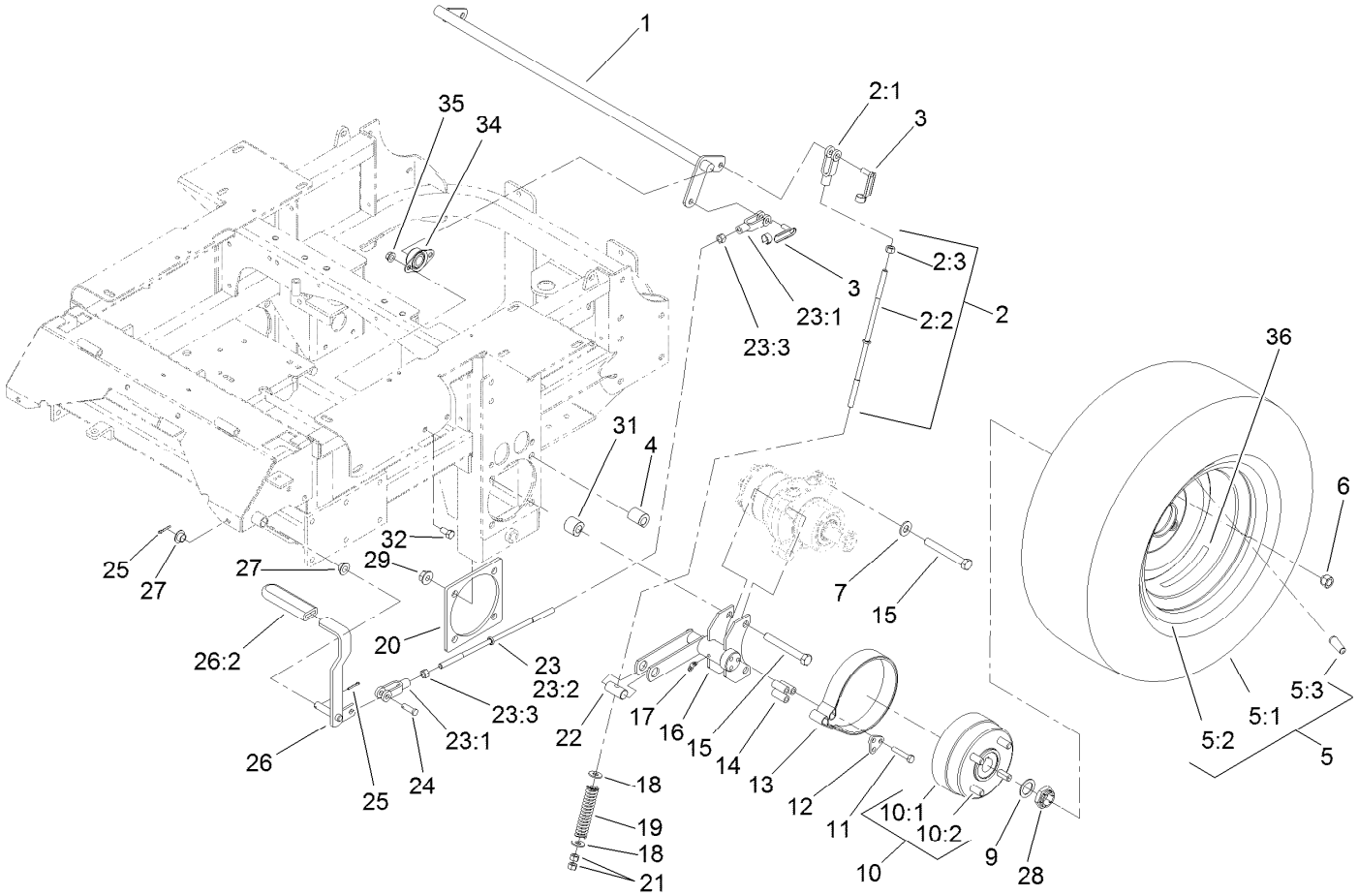

Main Frame and Rear Wheel Assembly

Ref.	Part Number	Qty.	Description
1	1-632217-03	1	Shaft-Brake
2	108-5963	2	Brake Rod ASM
2:1	1-633131	1	Yoke-Linkage, Brake
2:2	108-5980	1	Rod-Brake
2:3	3219-3	1	Nut-Hex
3	103-2399	3	Pin-Spring, Clevis
4	109-5012	4	Spacer-Wheel, Long
5	127-9521	2	Wheel And Tire ASM
5:1	1-633993	1	Tire
5:2	127-9522	1	Wheel
5:3	232-27	1	Stem-Valve
6	242-50	8	Nut-Lug
7	87-7270	4	Washer-Thrust
9	1-523157	2	Washer-Spacer
10	103-0590	2	Wheel Hub ASM
10:1	103-0589	1	Hub-Wheel
10:2	1-633926	4	Stud-Wheel
11	322-9	6	Screw-HH
12	103-0374	2	Retainer-Band, Brake
13	103-0355	2	Band-Brake
14	103-0384	6	Spacer

Ref.	Part Number	Qty.	Description
15	325-33	8	Screw-HH
16	103-0354-03	2	Brake Bracket ASM
17	1481	2	Fitting-Grease
18	3256-4	4	Washer-Flat
19	1-633454	2	Spring-Brake
20	103-3271-03	2	Plate-Reinforcement
21	3219-3	4	Nut-Hex
22	1-633144	2	Pin-Trunion
23	108-5962	1	Brake Rod ASM
23:1	1-633131	2	Yoke-Linkage, Brake
23:2	1-633477	1	Rod-Brake
23:3	3219-3	2	Nut-Hex
24	1-808285	1	Pin-Clevis
25	3272-10	2	Pin-Cotter
26	1-634500	1	Brake Lever ASM
26:2	1-633268	1	Grip-Lever
27	1-513140	2	Bearing-Control
28	116-1399	2	Locknut
29	32128-49	8	Nut-HHF
31	109-5011	4	Spacer-Wheel, Short
32	323-4	4	Screw-HH

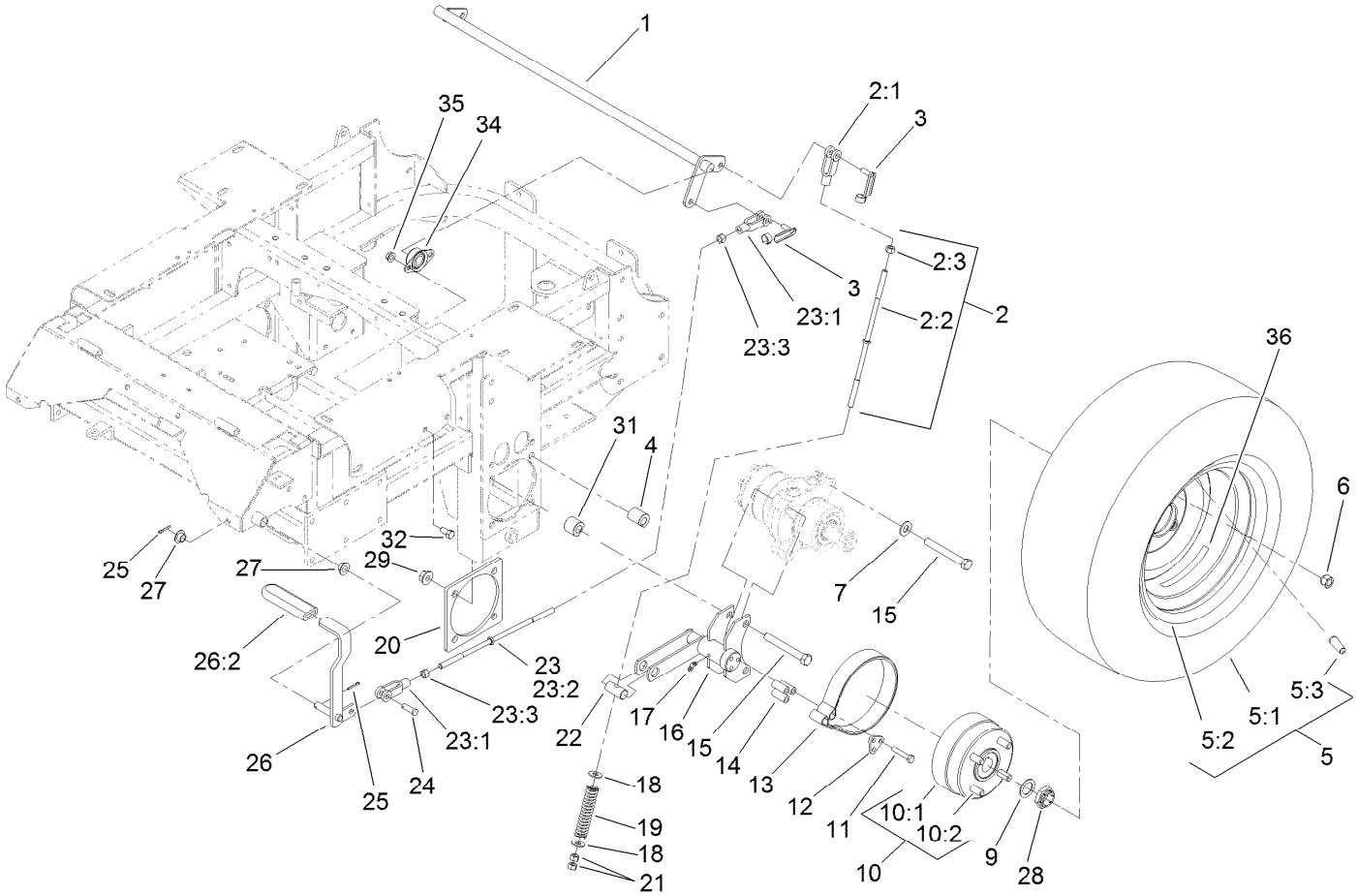

Main Frame and Rear Wheel Assembly (continued)

Ref.	Part Number	Qty.	Description
34	1-633102	2	Bearing-Flange, Side
35	3290-357	4	Nut-HHF, Whiz
36	126-2055	2	Decal-Torque, Wheel Hub Lug

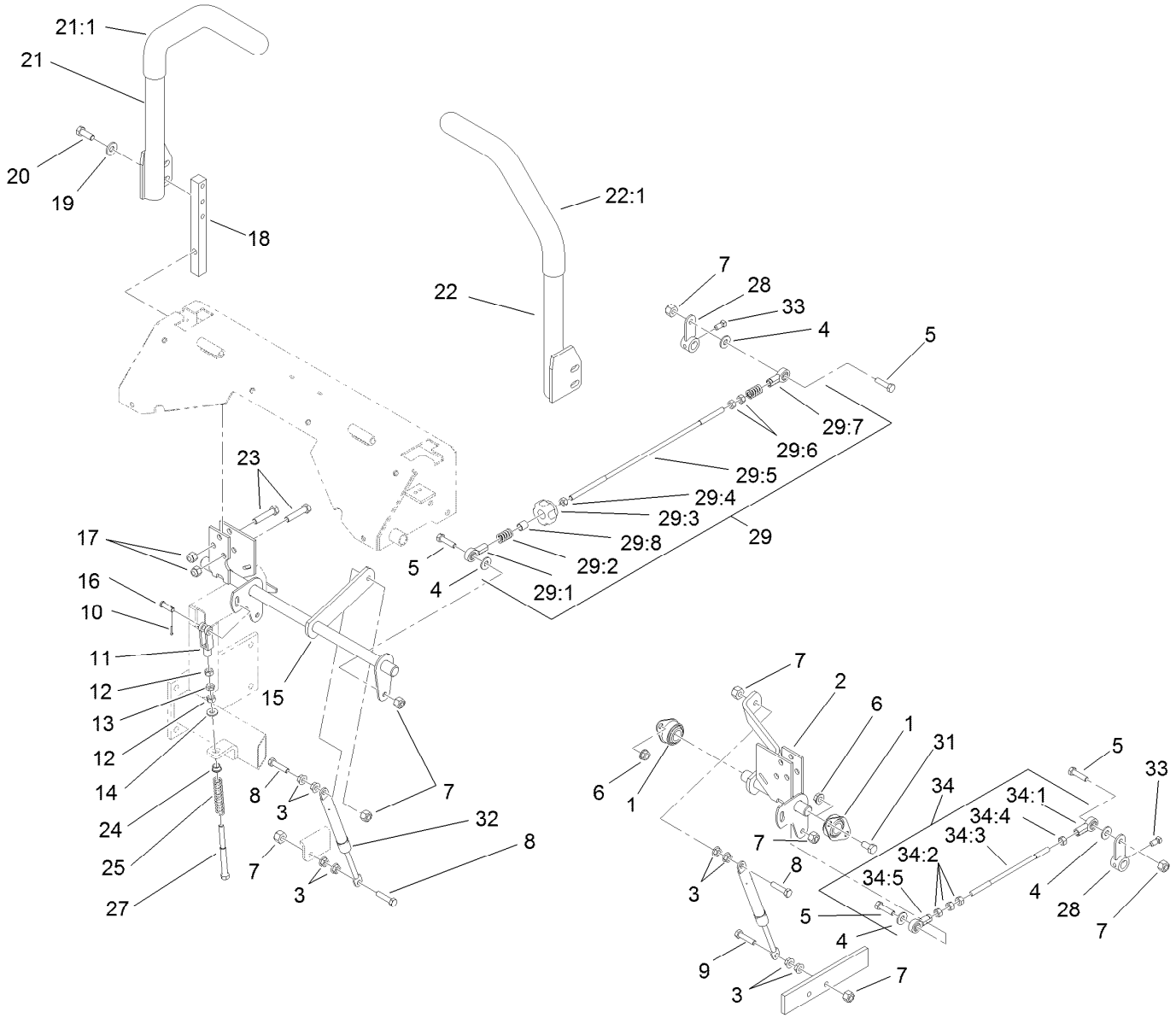

Hydro Control Assembly

Ref.	Part Number	Qty.	Description
1	1-633102	4	Bearing-Flange, Side
2	107-3480	1	Control-Motion, LH
3	32128-20	10	Nut-HF
4	3256-3	4	Washer-Flat
5	322-6	4	Screw-HH
6	3290-357	6	Nut-HHF, Whiz
7	3296-29	8	Nut-Lock, NI
8	1-403180	3	Screw-HH
9	322-41	1	Screw-HH
10	3272-5	2	Pin-Cotter
11	1-303105	2	Yoke-Adjustable
12	3219-2	4	Nut-Hex
13	3220-2	2	Nut-Jam
14	3256-2	2	Washer-Flat
15	107-3481	1	Control-Motion, RH
16	1-808280	2	Pin-Clevis
17	3296-39	6	Nut-Lock, NI
18	103-0407	2	Arm-Shaft, Control
19	98-5975	4	Washer-Belleville
20	323-6	4	Screw-HH
21	108-7237	1	RH Lever ASM

Ref.	Part Number	Qty.	Description
21:1	106-9987	1	Grip-Control, Motion
22	108-7238	1	LH Lever ASM
22:1	106-9987	1	Grip-Control, Motion
23	323-9	6	Screw-HH
24	1-603735	2	Bushing-Flanged
25	1-603807	2	Spring-Return, Neutral
27	1-603737	2	Bolt-Return, Neutral
28	107-3470-03	2	Arm-Control, Hydraulic
29	107-3474	1	RH Control Rod ASM
29:1	1-543017	1	Balljoint-RH
29:2	1-323245	2	Spring-Compression
29:3	103-3060	1	Knob-Tracking
29:4	3219-2	1	Nut-Hex
29:5	107-3472	1	Rod-Control, RH
29:6	1-804524	2	Nut
29:7	1-633152	1	Balljoint-LH
29:8	103-1166	1	Spacer-Tube, Pump Link
31	323-4	6	Screw-HH
32	109-2339	2	Damper-Control, Motion
33	1-803022	2	Screw-Set
34	107-3475	1	LH Control Rod ASM

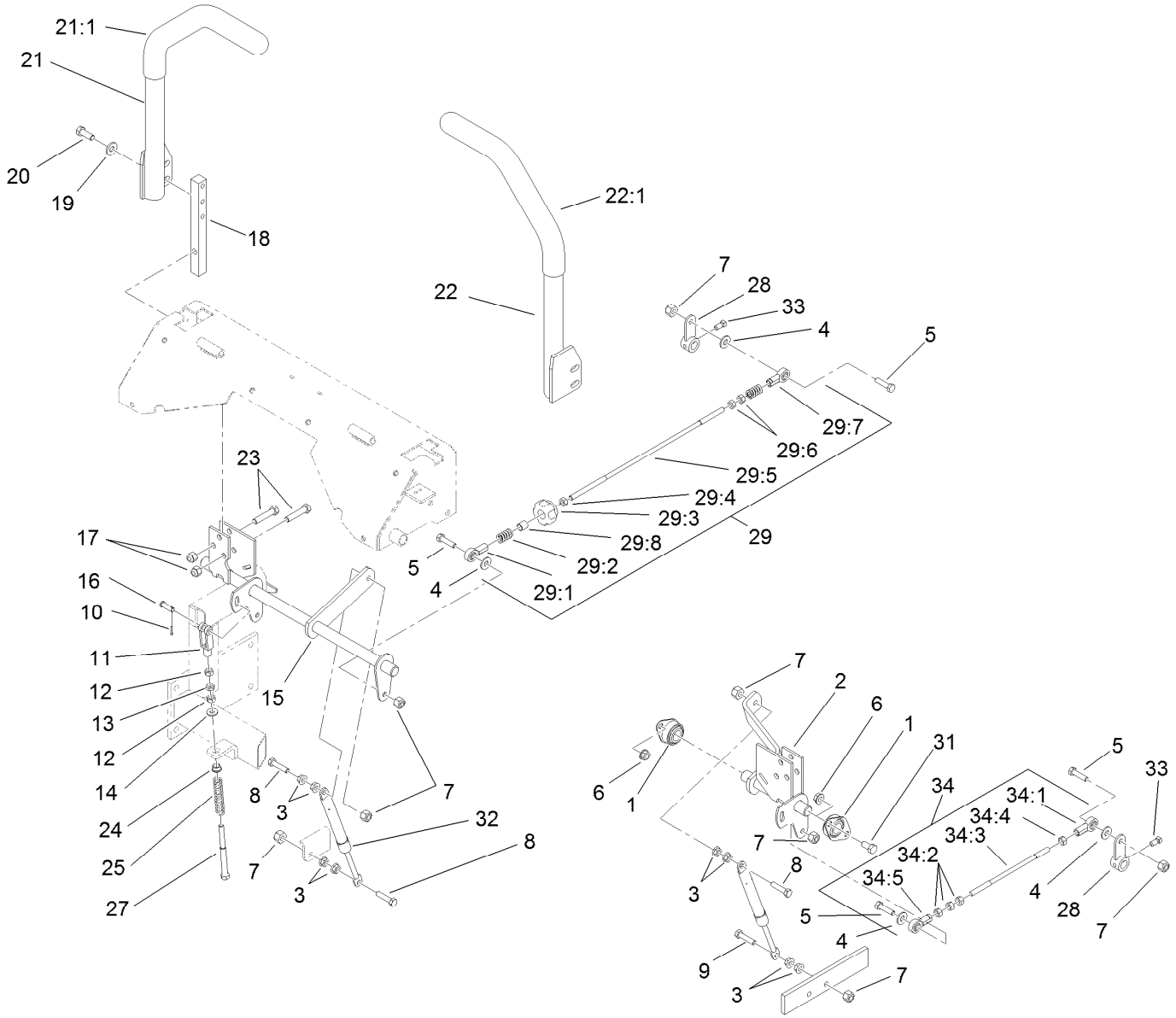

Hydro Control Assembly (continued)

Ref.	Part Number	Qty.	Description
34:1	1-543017	1	Balljoint-RH
34:2	3219-2	3	Nut-Hex
34:3	107-3473	1	Rod-Control, LH
34:4	1-804524	1	Nut
34:5	1-633152	1	Balljoint-LH

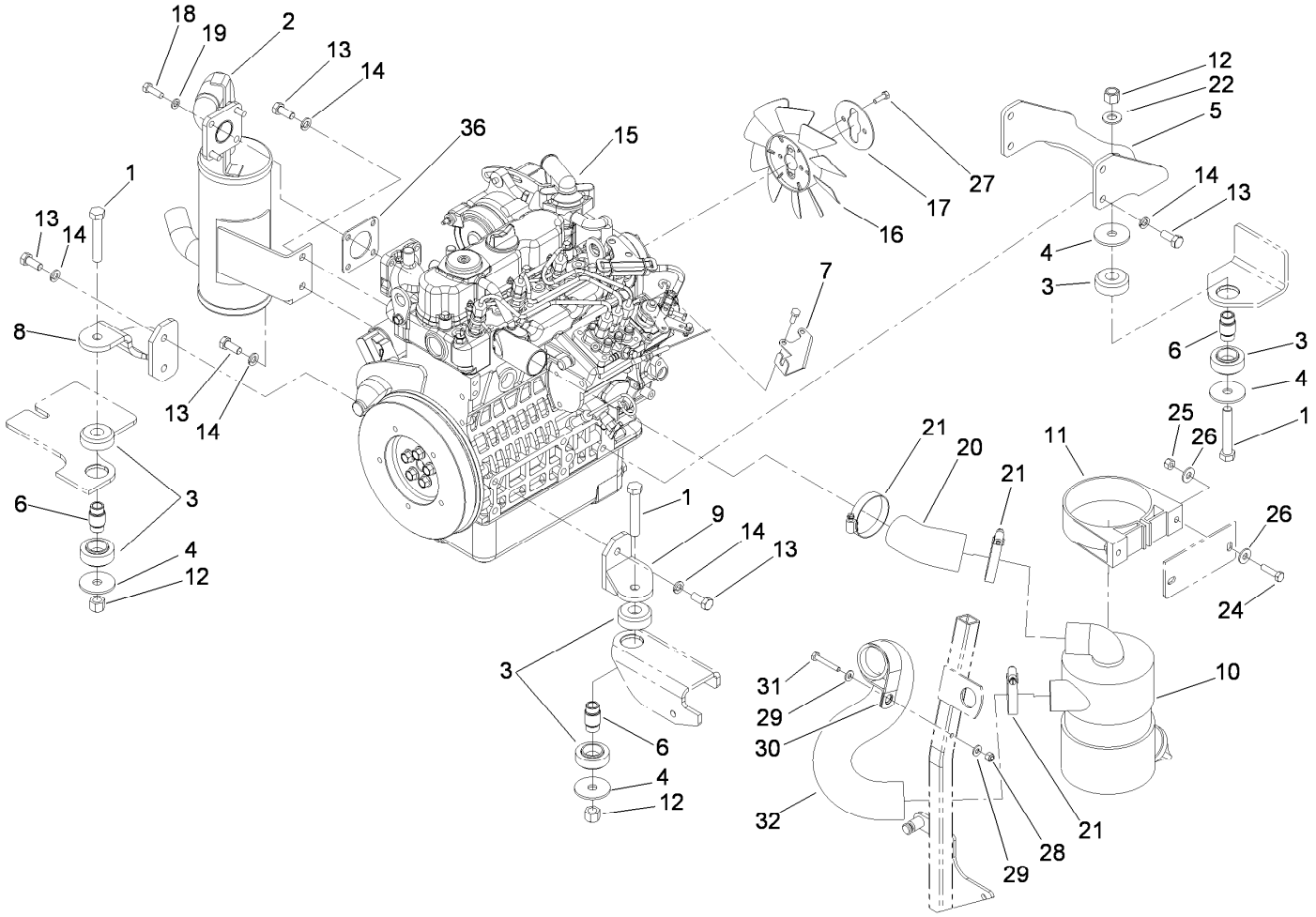

Engine, Exhaust and Air Intake Assembly

Ref.	Part Number	Qty.	Description
1	325-12	3	Screw-HH
2	107-9909	1	Muffler
3	107-9914	3	Mount-Isolation ASM
4	55-7960	4	Washer-Large
5	107-9917-03	1	Bracket-Engine Mount, Rear
6	110-0300	3	Spacer
7	112-2383	1	Bracket-Throttle
8	107-9920-03	1	Support-Engine, RH
9	107-9930-03	1	Support-Engine, LH
10	93-2190	1	Air Cleaner ASM
11	95-5806	1	Bracket-Mounting
12	3296-23	3	Nut-Lock, NI
13	43-0090	10	Screw-HH
14	42-9600	10	Washer-Lock, Spring
15	127-9654	1	Engine-Kubota, D902-E4B-Tor-3
16	110-0814	1	Fan

Ref.	Part Number	Qty.	Description
17	110-0816	1	Plate-Reatainer, Fan
18	33114-025	4	Screw-HH
19	3253-4	4	Washer-Lock
20	108-5371	1	Hose-Intake, Air Cleaner
21	1-643009	3	Clamp-Hose
22	3256-26	1	Washer-Flat
24	322-6	2	Screw-HH
25	3296-29	2	Nut-Lock, NI
26	3256-23	4	Washer-Plain
27	33113-020	2	Screw-HH
28	3296-42	1	Nut-Lock, NI
29	3256-22	2	Washer-Flat
30	1-643241	1	Clip-Loom
31	321-10	1	Screw-HH
32	108-5370	1	Hose-Intake, Engine
36	99-8343	1	Gasket-Muffler

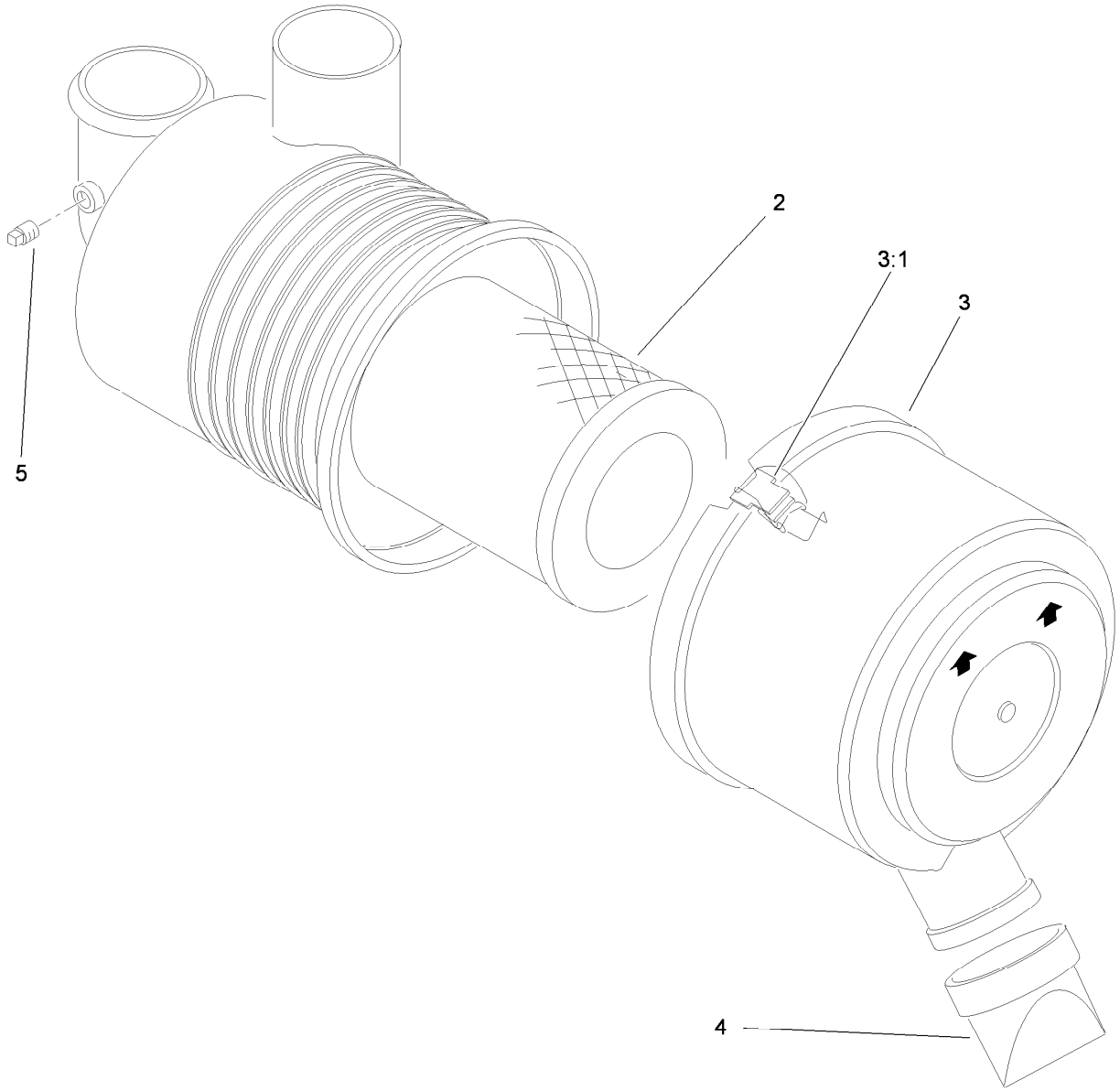

Air Cleaner Assembly No. 93-2190

Ref.	*Part Number*	*Qty.*	*Description*
2	108-3811	1	Filter-Air
3	94-3652	1	Cover ASM
3:1	1-643283	2	Latch-Cleaner, Air
4	87-9400	1	Valve-Vacuator
5	285-17	1	Plug-Pipe

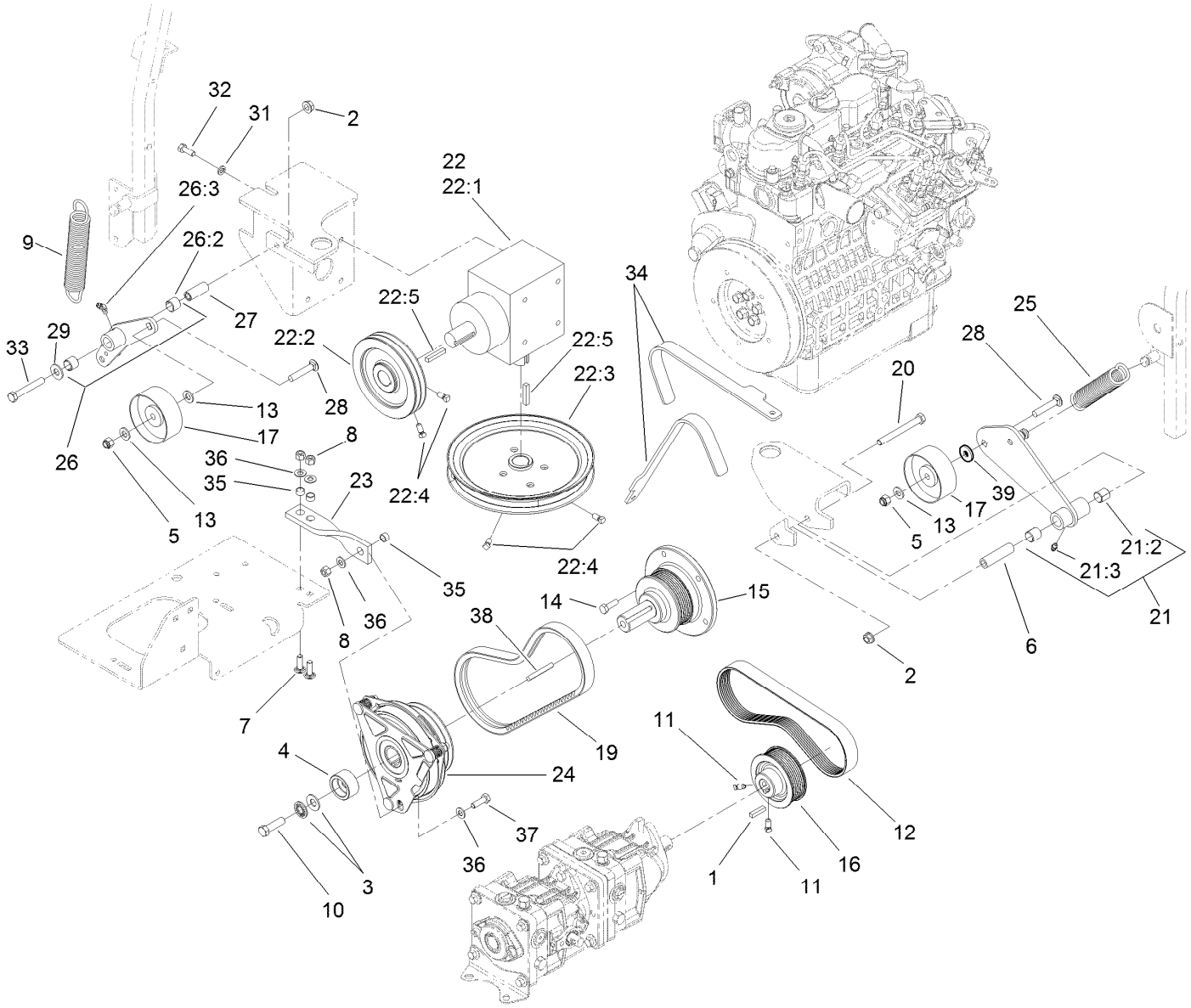

Hydro and Gearbox Assembly

Ref.	Part Number	Qty.	Description
1	5-0698	1	Key
2	3290-357	2	Nut-HHF, Whiz
3	1-603610	2	Washer-Spring
4	114-8152	1	Retainer-Clutch
5	3296-39	2	Nut-Lock, NI
6	1-603384	1	Bushing-Pivot, Idler
7	3230-22	2	Screw-CARR
8	3296-29	3	Nut-Lock, NI
9	110-0822	1	Spring-Extension
10	3212-6	1	Screw-HH
11	1-803022	2	Screw-Set
12	110-3865	1	Belt-V, Ribbed
13	3256-24	4	Washer-Flat
14	33114-025	5	Screw-HH
15	112-2335	1	Shaft-Stub
16	110-3864	1	Pulley
17	108-5910	2	Pulley-Flat
19	110-3866	1	Belt-V

Ref.	Part Number	Qty.	Description
20	323-15	1	Screw-HH
21	108-5939	1	Pump Idler Arm ASM
21:2	1-513034	2	Sleeve-Bearing
21:3	302-5	1	Fitting-Grease
22		1	Gearbox ASM ●
22:1	107-9887	1	Gearbox-90 DEG
22:2	110-3862	1	Pulley
22:3	110-0892	1	Pulley
22:4	1-803022	4	Screw-Set
22:5	67-7490	2	Key-Square
23	112-1781	1	Strap-Stop, Clutch
24	112-2320	1	Clutch-Magnetic
25	119-0394	1	Spring-Extension
26	112-2356	1	Gearbox Idler Arm ASM
26:2	103-4681	2	Sleeve-Bearing
26:3	1481	1	Fitting-Grease
27	1-603044	1	Bushing
28	3231-6	2	Screw-CARR

● Not serviced separately

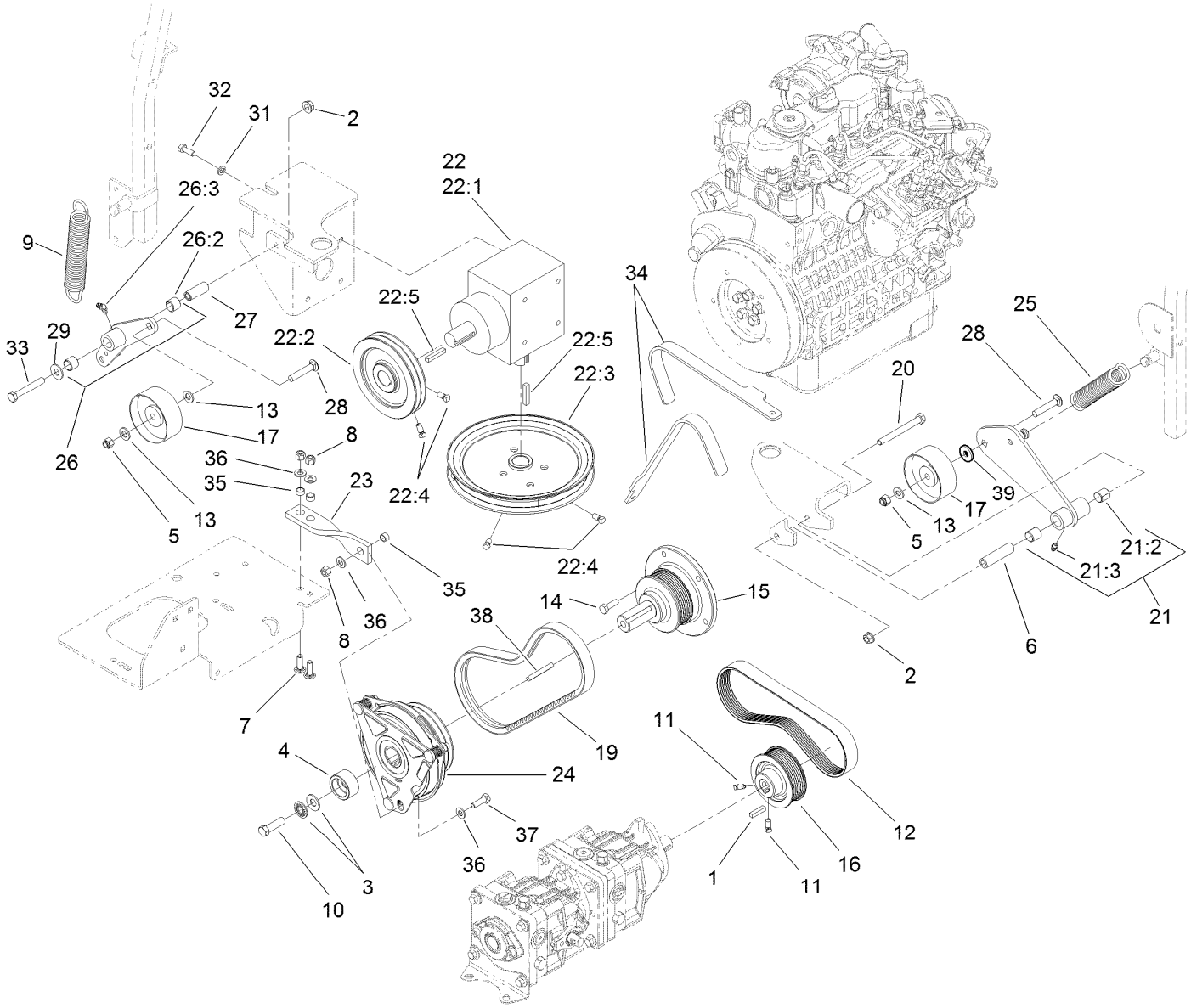

Hydro and Gearbox Assembly (continued)

Ref.	Part Number	Qty.	Description
29	3256-4	1	Washer-Flat
31	3253-4	4	Washer-Lock
32	322-4	4	Screw-HH
33	323-12	1	Screw-HH
34	110-0876	1	Tool-Alignment, Pulley

Ref.	Part Number	Qty.	Description
35	65-9820	3	Spacer
36	3256-23	4	Washer-Plain
37	322-5	1	Screw-HH
38	5-1336	1	Key-Square
39	1-373034	1	Washer

● Not serviced separately

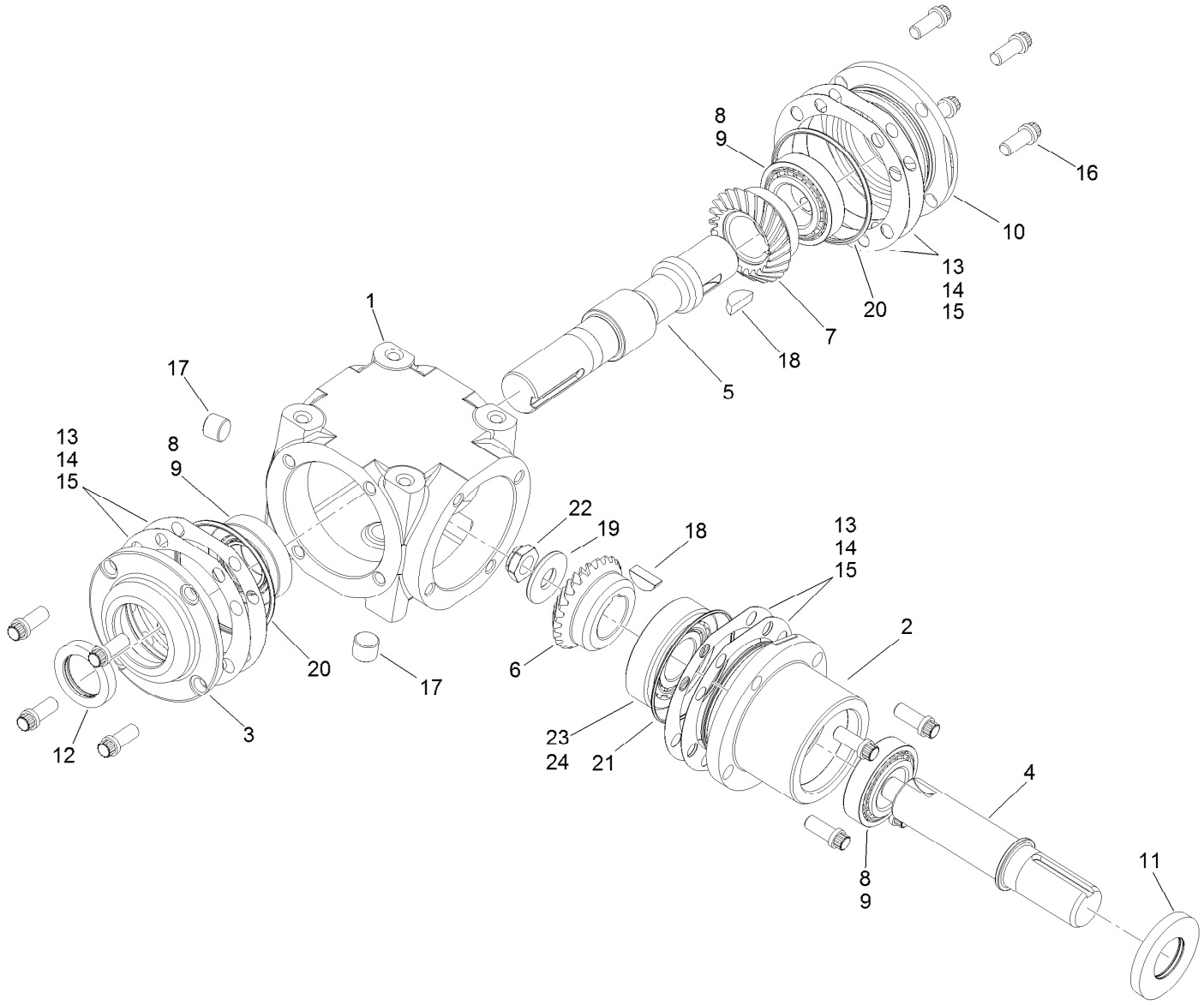

Gearbox Assembly No. 107-9887

Ref.	Part Number	Qty.	Description
1	110-0843	1	Case
2	110-0853	1	Housing-Pinion
3	100-4566	1	Cap-End, Open
4	110-0844	1	Shaft-Pinion
5	110-0845	1	Shaft-Cross
6	110-0847	1	Gear-Shaft, Cross
7	110-0846	1	Gear-Pinion
8	110-0848	3	Bearing-Cup
9	110-0849	3	Bearing-Cone
10	100-4574	1	Cap-End, Closed
11	100-4575	1	Seal
12	110-0850	1	Seal-Shaft, Cross

Ref.	Part Number	Qty.	Description
13	100-4591	1	Shim-Brown, .010In
14	100-4592	1	Shim-Blue, .005In
15	100-4593	1	Shim-Green, .003In
16	100-4578	12	Screw
17	100-4579	2	Plug
18	3257-33	2	Key-Woodruff
19	100-4581	1	Washer
20	100-4582	2	O-Ring
21	110-0851	1	O-Ring
22	110-0852	1	Nut Lock
23	100-5817	1	Bearing-Cup
24	100-5816	1	Bearing-Cone

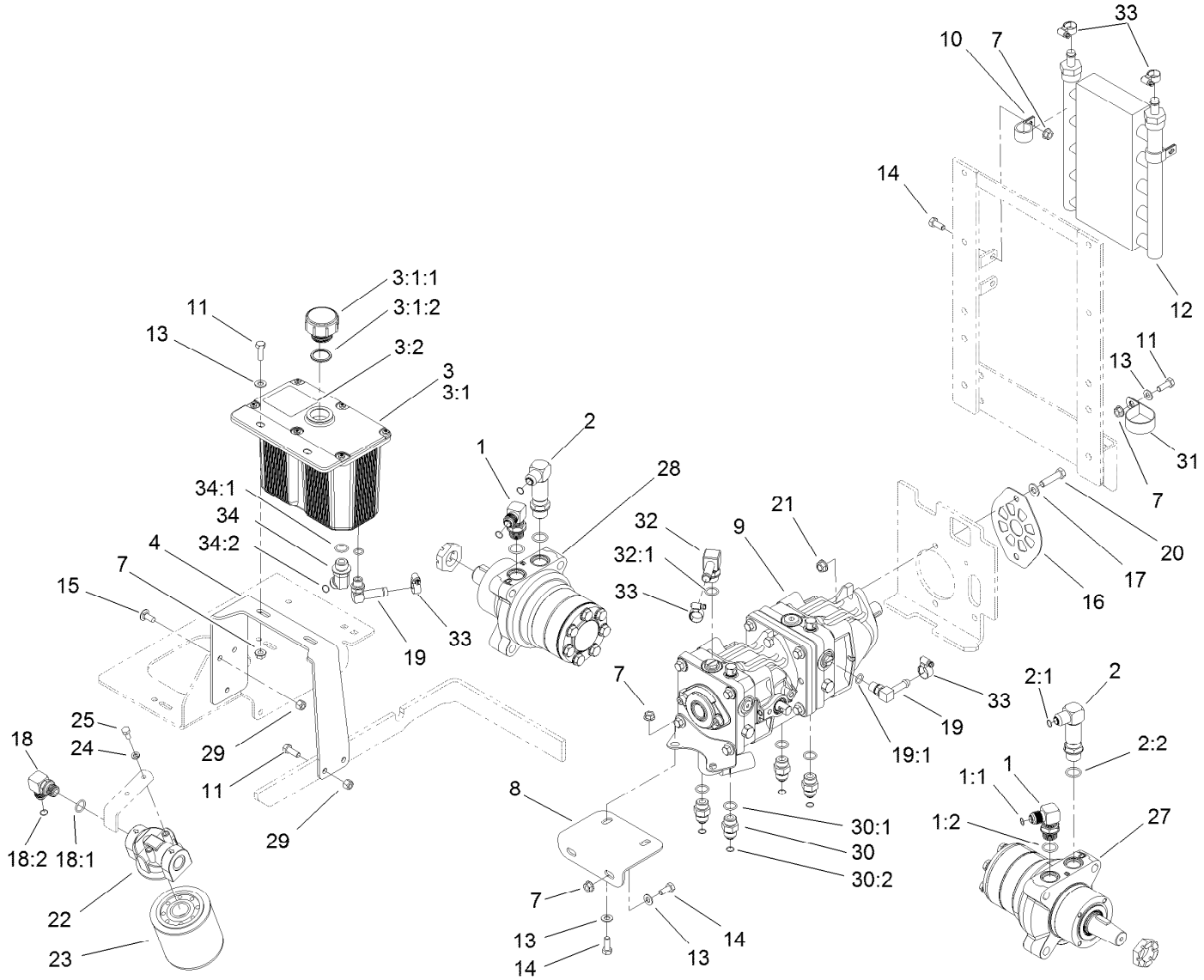

Hydraulic Tank, Pump and Motor Assembly

Ref.	Part Number	Qty.	Description
1	1-633605	2	Fitting-HYD, 90 DEG
1:1	1-603992	1	O-Ring
1:2	237-80	1	O-Ring
2	108-5323	2	Fitting-Elbow-90
2:1	1-603992	1	O-Ring
2:2	237-80	1	O-Ring
3	108-5320	1	Hydraulic Tank ASM
3:1		1	Tank-Hydraulic ●
3:1:1	103-1948	1	Cap-Reservoir, HYD
3:1:2	103-1949	1	Gasket-Cap
3:2	115-4212	1	Decal-Warning
4	108-5352-03	1	Bracket-Tank, Hydraulic
7	32128-20	11	Nut-HF
8	107-3462-03	1	Bracket-Pump, Front
9	107-9885	1	Tandem Pump ASM
10	110-0824	4	R-Clamp
11	322-5	4	Screw-HH
12	114-8168	1	Cooler-Oil, Hydro

Ref.	Part Number	Qty.	Description
13	3256-23	7	Washer-Plain
14	322-3	8	Screw-HH
15	3230-23	3	Screw-CARR
16	108-5367-03	1	Plate-Shield, Pump
17	3256-24	2	Washer-Flat
18	103-2153	1	Fitting-90 DEG
18:1	1-603920	1	O-Ring
18:2	1-603992	1	O-Ring
19	109-6449	2	Fitting-Elbow, 90
19:1	237-42	1	O-Ring
20	323-8	2	Screw-HH
21	3290-357	2	Nut-HHF, Whiz
22	86-9080	1	Head-Filter
23	67-8110	1	Cartridge-Filter, Oil
24	1-805004	2	Washer-Lock
25	321-3	2	Screw-HH
27	112-8357	1	HYD Motor ASM (CCW)
28	112-8358	1	HYD Motor ASM (CW)

● Not serviced separately

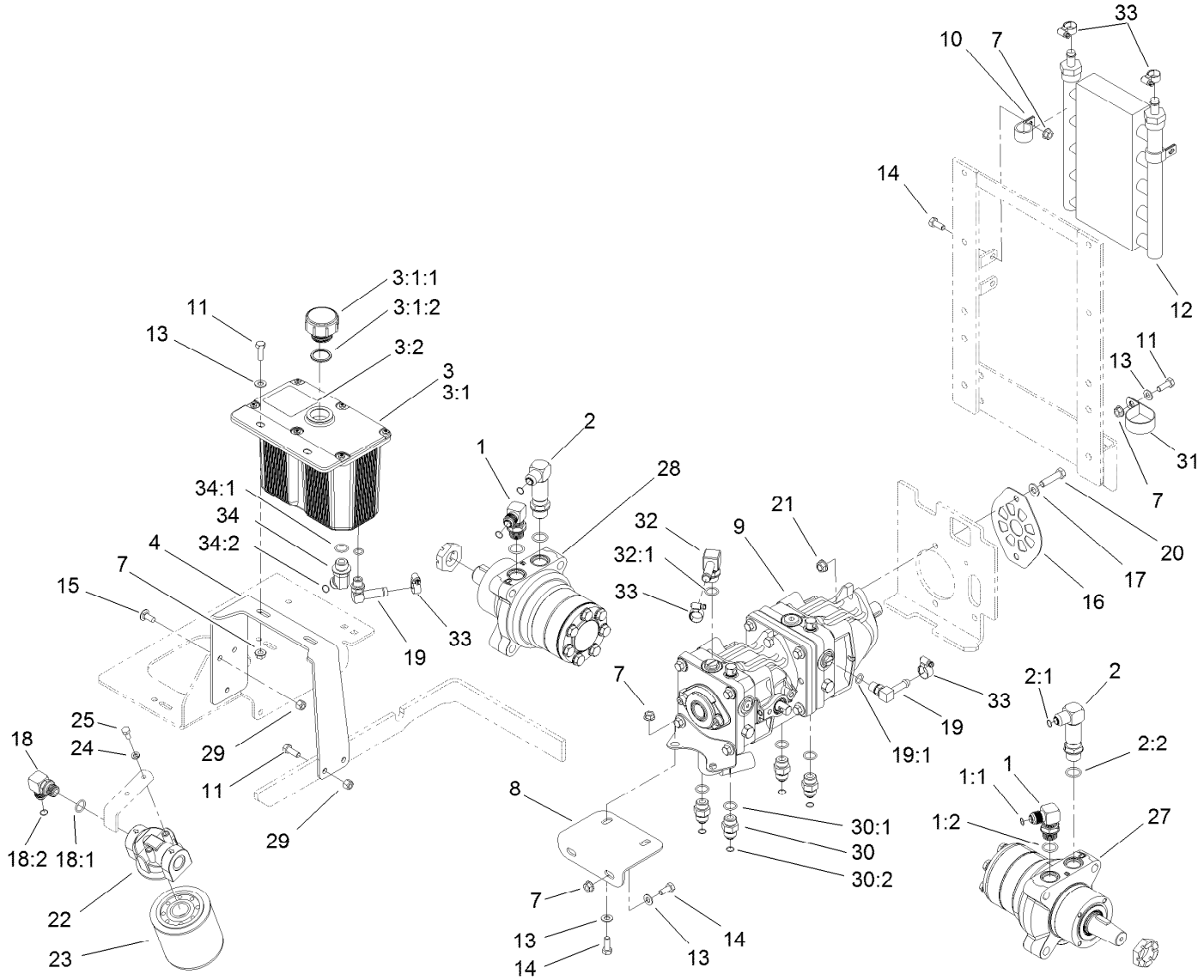

Hydraulic Tank, Pump and Motor Assembly (continued)

Ref.	Part Number	Qty.	Description
29	3296-29	4	Nut-Lock, NI
30	1-603990	4	Fitting-Straight
30:1	1-603920	1	O-Ring
30:2	1-603992	1	O-Ring
31	2412-147	1	Clamp-R
32	108-5316	1	Fitting-Elbow, 90 DEG

Ref.	Part Number	Qty.	Description
32:1	237-79	1	O-Ring
33	109-6801	5	Clamp-Hose
34	1-523221	1	Fitting-HYD, 45 DEG
34:1	1-603920	1	O-Ring
34:2	1-603992	1	O-Ring

● Not serviced separately

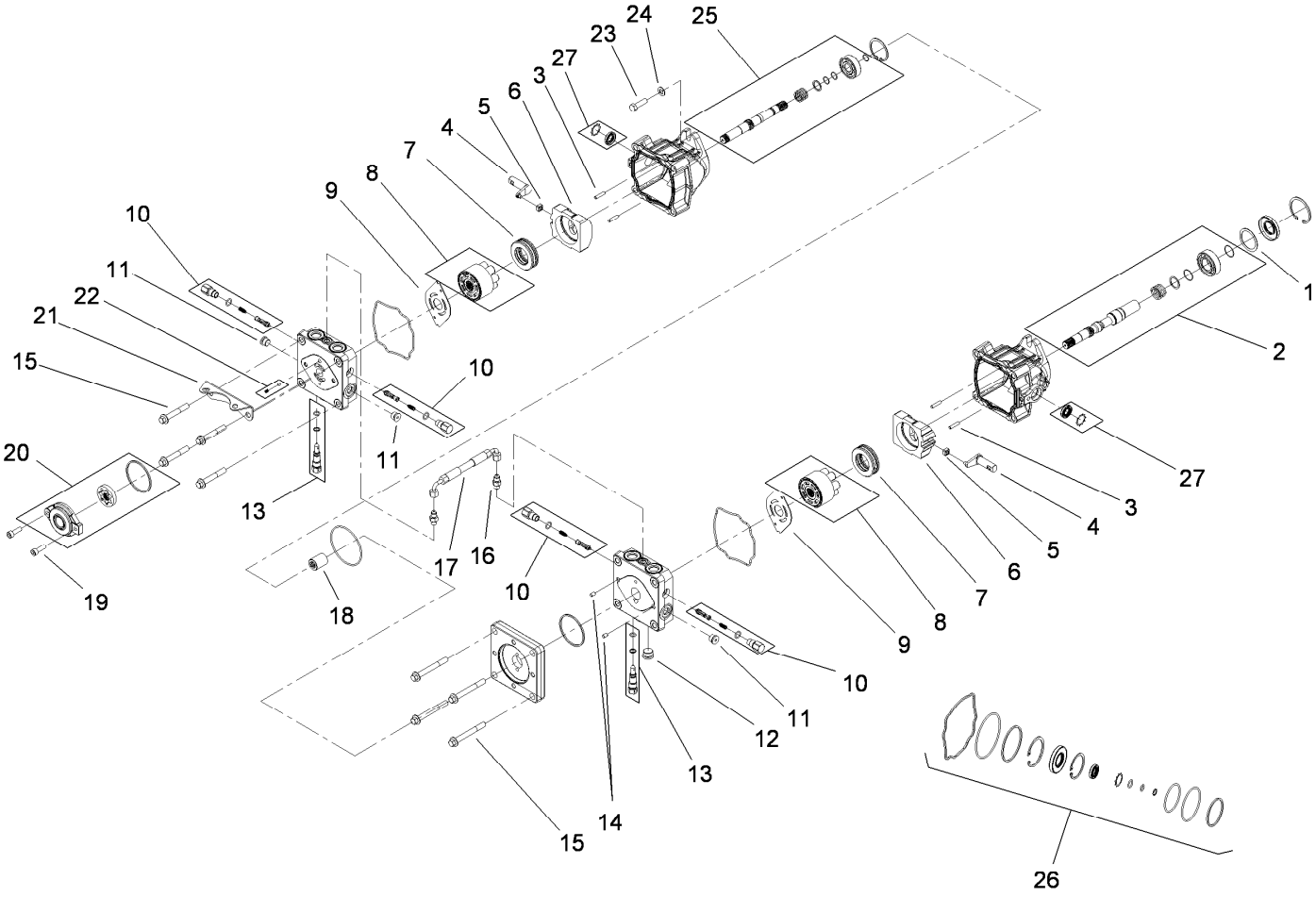

Tandem Pump Assembly No. 107-9885

Ref.	Part Number	Qty.	Description
1	112-4168	1	Spacer
2	112-4151	1	Input Pump Shaft Kit
3	106-8753	4	Pin-Headless, Straight
4	112-4152	2	Arm-Trunnion
5	94-1910	2	Guide-Slot
6	112-4153	2	Swashplate
7	112-4154	2	Bearing-Thrust
8	108-2112	2	Cylinder Block Kit
9	108-6801	2	Plate-Valve
10	112-4155	4	Shock Valve Kit
11	104-2189	3	Plug-Thread, Straight
12	112-4156	1	Plug-Steel
13	106-8759	2	Bypass Valve Kit
14	104-2170	2	Pin
15	112-4157	8	Bolt
16	117-7842	2	Fitting-Straight
17	117-7843	1	Hose ASM
18	112-4160	1	Coupling
19	112-4161	2	Bolt
20	112-4162	1	Charge Pump Kit
21	112-4163	1	Bracket-Support, Pump
22	112-4164	1	Charge Relief Kit
23	112-4165	2	Bolt-HSH
24	112-4166	2	Washer
25	112-4167	1	Second Pump Shaft Kit
26	112-4150	1	Overhaul Seal Kit
27	114-8155	1	Trunnion Seal Kit

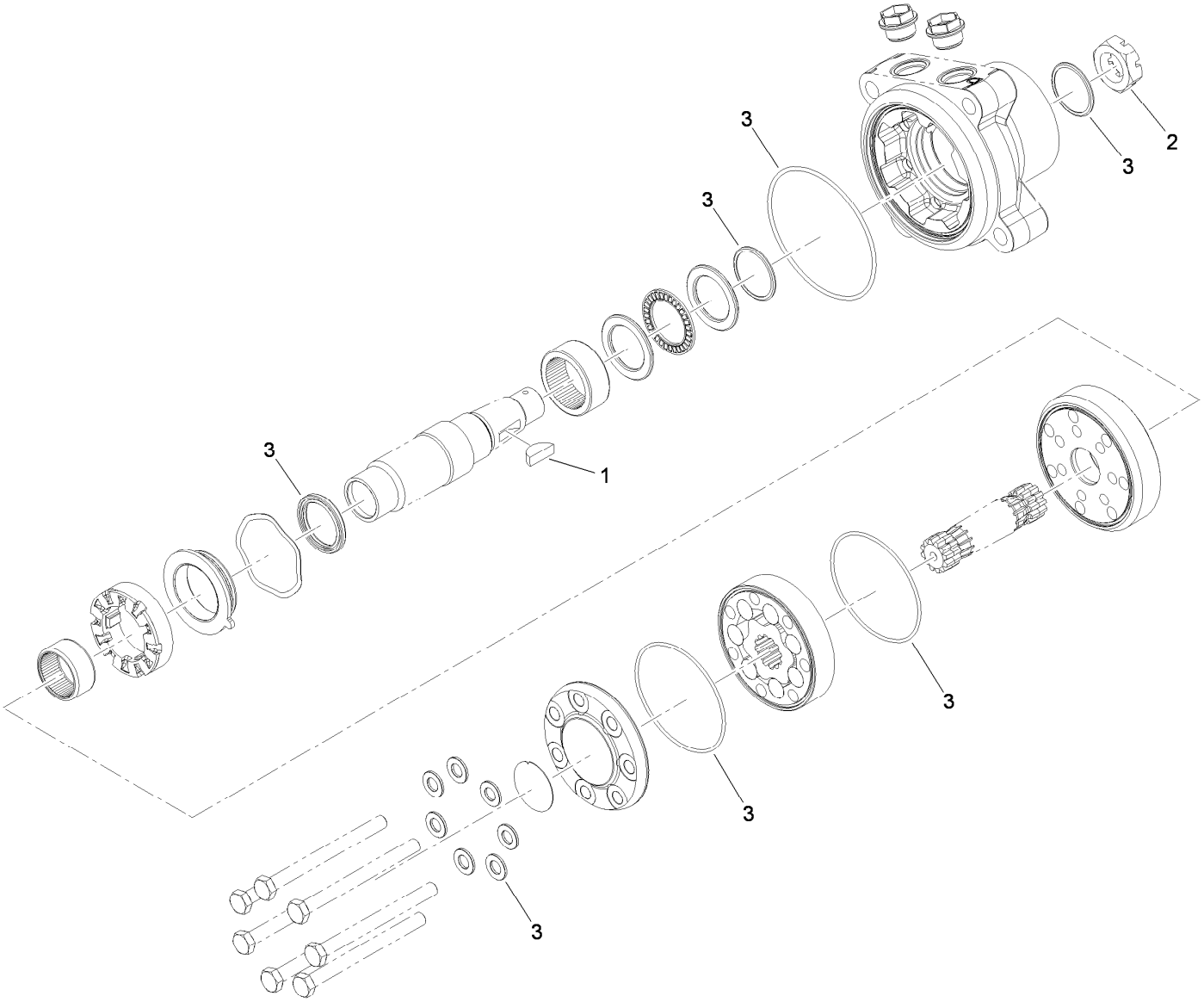

Hydraulic Motor Assembly No. 112-8357 (CCW)

Ref.	*Part Number*	*Qty.*	*Description*
1	3257-42	1	Key-Woodruff
2	1-809036	1	Nut-HH
3	109-5966	1	Wheel Motor Seal Kit

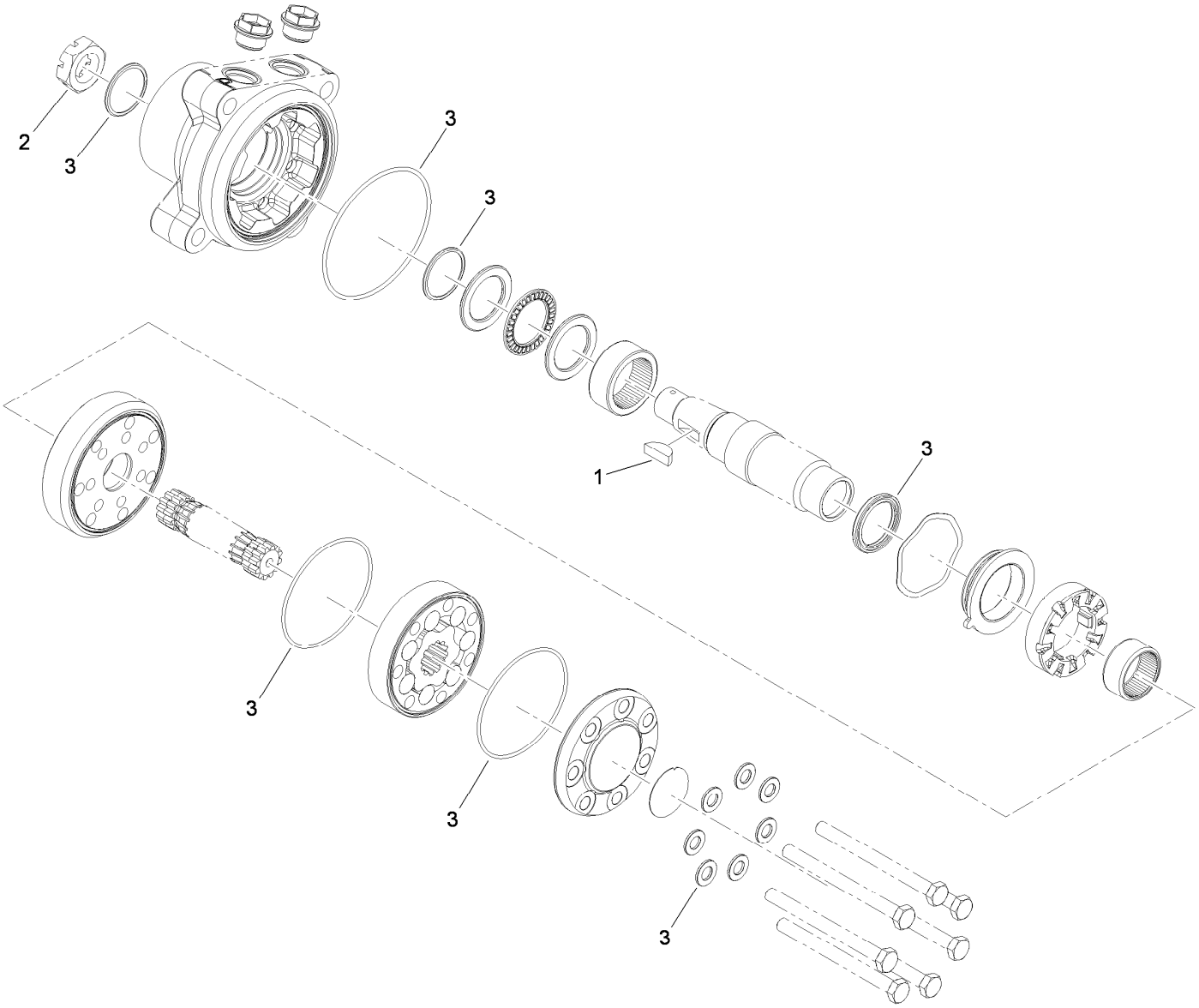

Hydraulic Motor Assembly No. 112-8358 (CW)

Ref.	*Part Number*	*Qty.*	*Description*
1	3257-42	1	Key-Woodruff
2	1-809036	1	Nut-HH
3	109-5966	1	Wheel Motor Seal Kit

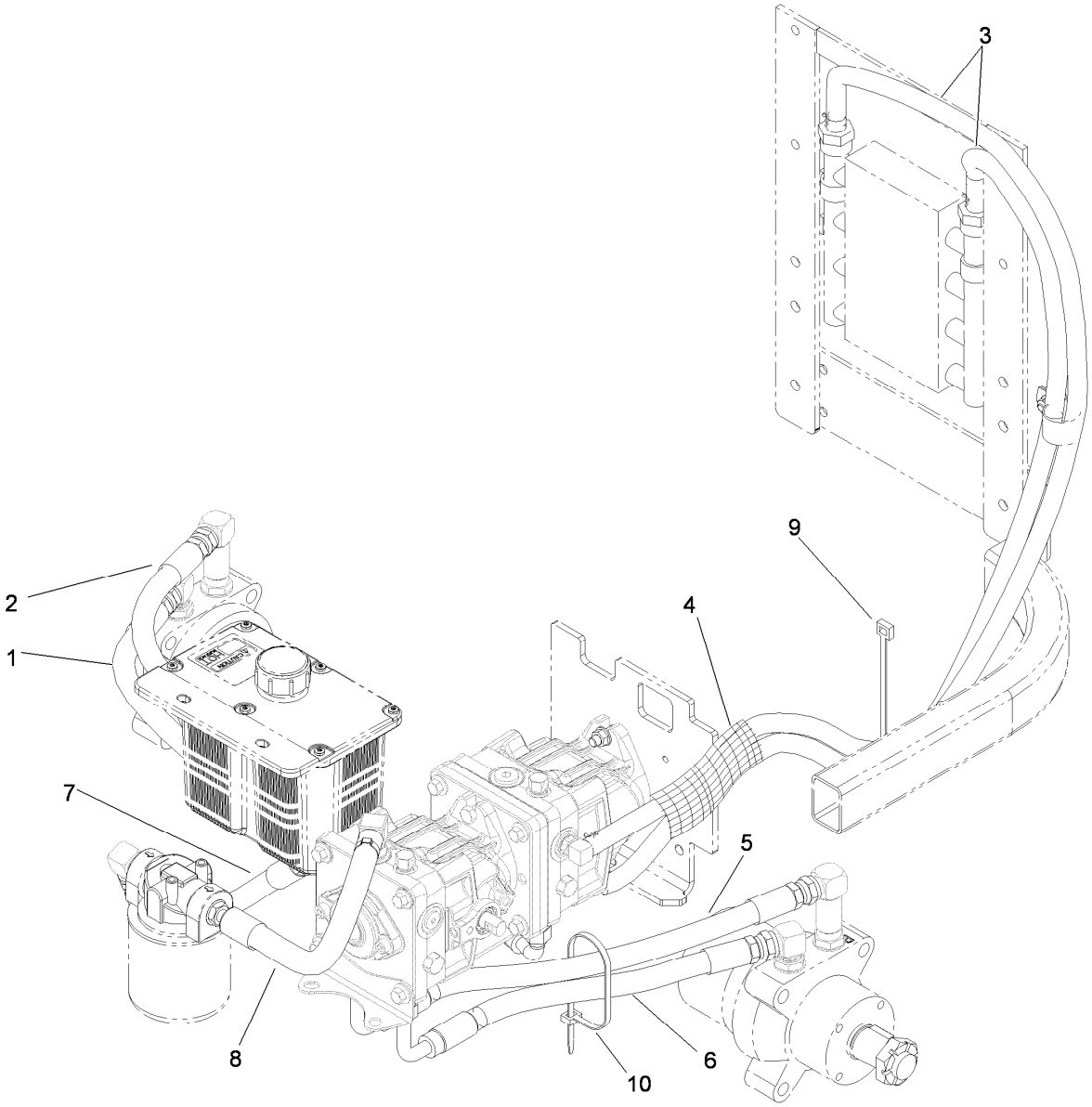

Hydraulic Hose Assembly

Ref.	Part Number	Qty.	Description
1	107-3495	1	Hydraulic Hose ASM
2	107-3490	1	Hydraulic Hose ASM
3	114-8169	2	Hose-Hydraulic
4	114-8201	1	Sleeve-Fabric
5	108-5318	1	Hydraulic Hose ASM
6	114-8165	1	Hydraulic Hose ASM
7	110-3854	1	Hydraulic Hose ASM
8	108-5374	1	Hydraulic Hose ASM
9	1-303335	1	Tie-Plastic
10	1-809066	1	Cable Tie-Plastic

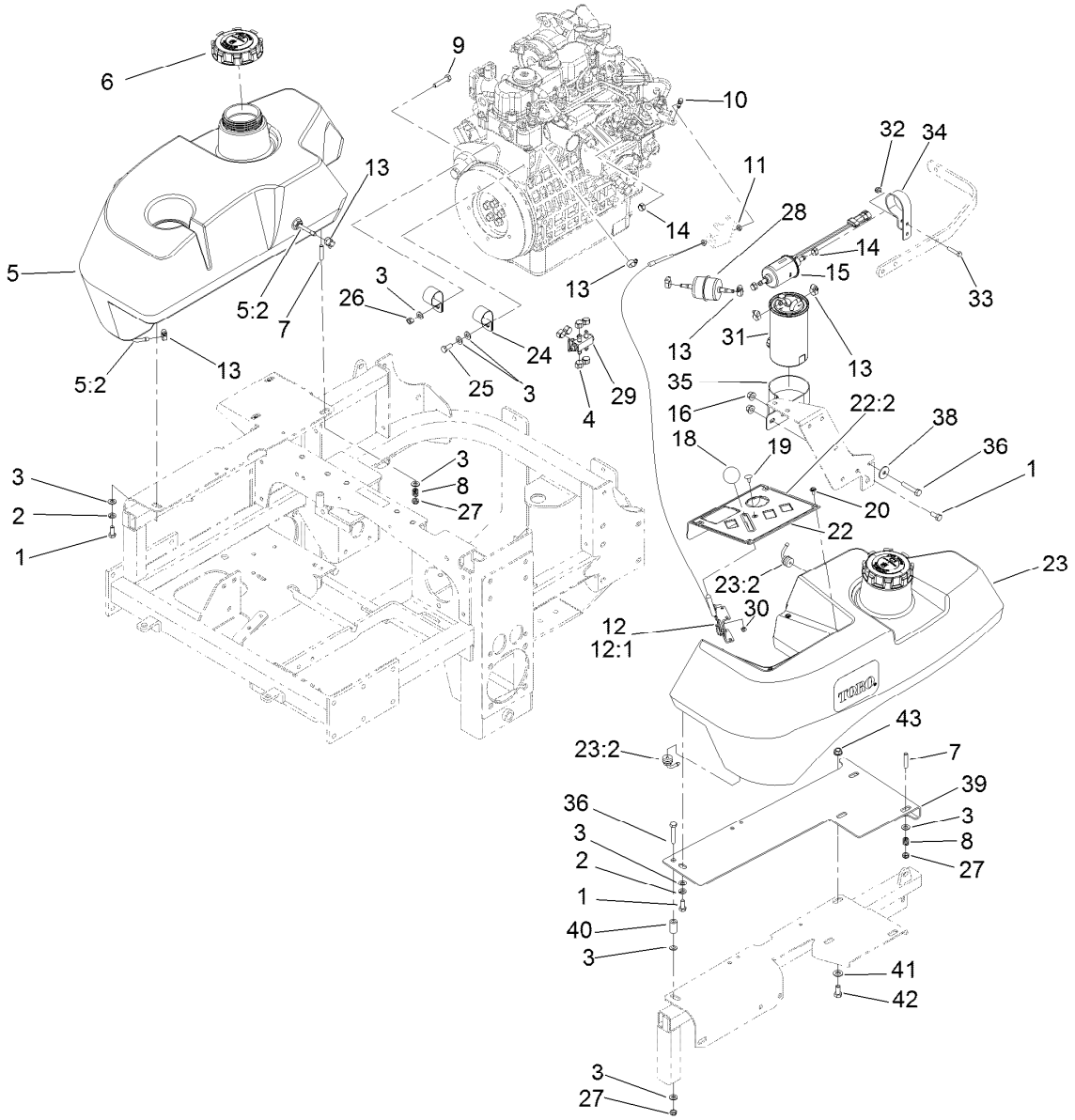

Fuel System and Throttle Control Assembly

Ref.	Part Number	Qty.	Description
1	322-3	3	Screw-HH
2	1-805005	2	Washer-Lock
3	3256-23	13	Washer-Plain
4	1-643293	6	Clamp-Hose, Fuel
5	114-8221	1	RH Fuel Tank ASM
5:2	103-2615	2	Fitting-Fuel, Bulkhead
6	114-8214	2	Biodiesel Cap ASM
7	1-633023	6	Stud
8	1-633349	6	Spring-Tank, Fuel
9	322-7	1	Screw-HH
10	108-5928	1	Swivel-Stop, Cable
11	3220-1	2	Nut-Jam
12	117-3850	1	Throttle Control ASM
12:1	112-2334	1	Lever-Throttle
13	2412-108	9	Clamp-Worm
14	1-643277	3	Clamp-Hose, Fuel
15	110-8806	1	Pump-Fuel
16	3296-58	2	Nut-Lock, NI
18	1-603175	1	Knob-Ball
19	1-807513	2	Bolt-CARR
20	109-2661	4	Screw-PPH

Ref.	Part Number	Qty.	Description
22	117-0913	1	Control Panel ASM
22:2	121-7562	1	Decal-Panel, Control
23	114-8222	1	LH Fuel Tank ASM
23:2	103-2615	2	Fitting-Fuel, Bulkhead
24	1-643312	2	Clip-Loom
25	33114-020	1	Screw-HH
26	3296-29	1	Nut-Lock, NI
27	3296-47	7	Nut-Lock, NI
28	112-7836	1	Filter-Inline
29	1-643234	1	Valve-Fuel, Dual Flow
30	3296-2	2	Nut-Lock, NI
31	112-9188	1	Element-Filter, Fuel/Water
32	104-7201	1	Nut-HF
33	321-8	1	Screw-HH
34	110-8817	1	Bracket-Pump, Fuel
35	110-8807	1	Bracket-Filter, Fuel
36	322-9	2	Screw-HH
38	3256-82	1	Washer-Flat
39	114-1545-03	1	Bracket-Fuel Tank, LH
40	94-7564	1	Spacer
41	3256-24	2	Washer-Flat

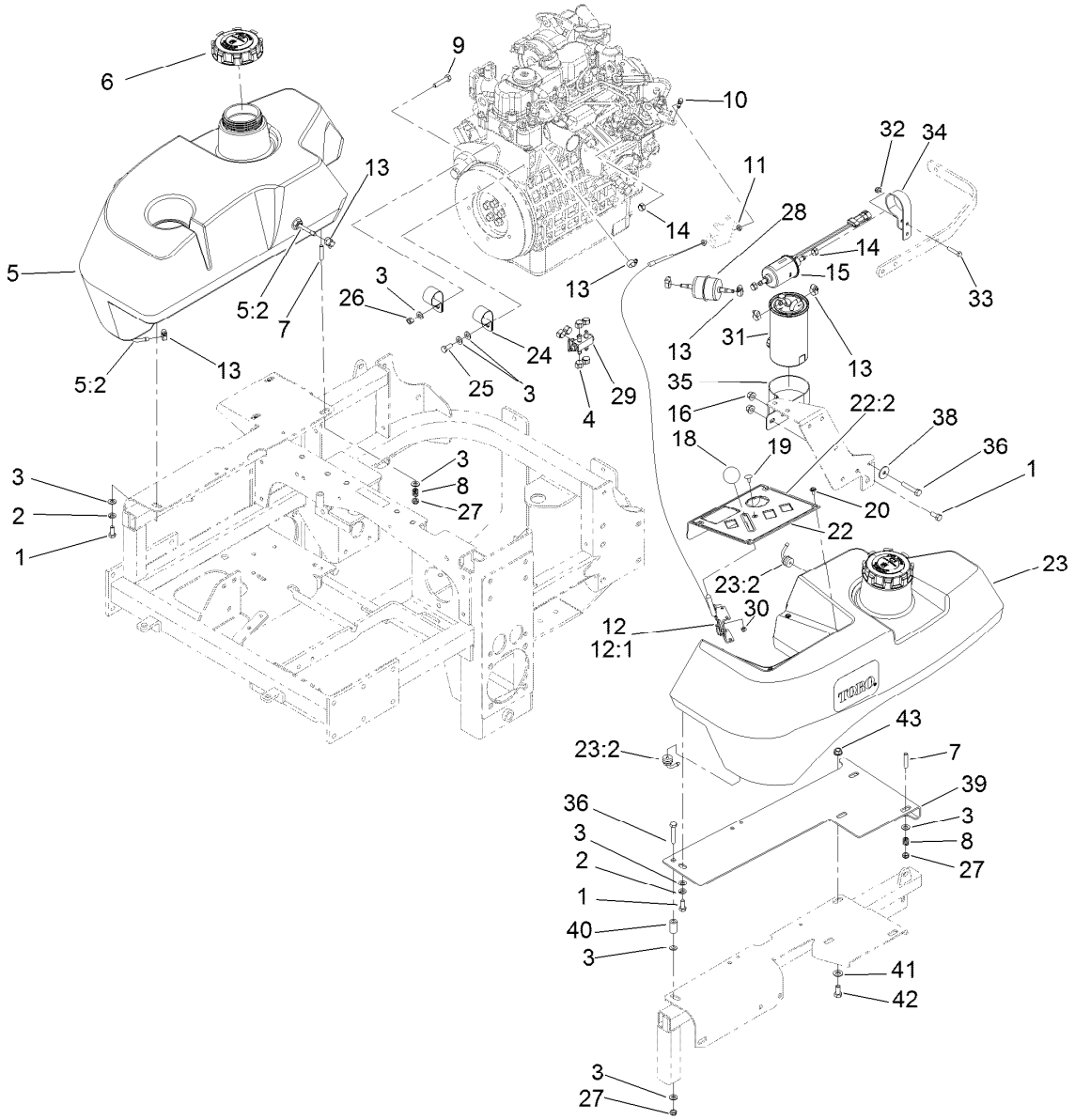

Fuel System and Throttle Control Assembly (continued)

Ref.	Part Number	Qty.	Description
42	323-4	2	Screw-HH
43	3290-357	2	Nut-HHF, Whiz

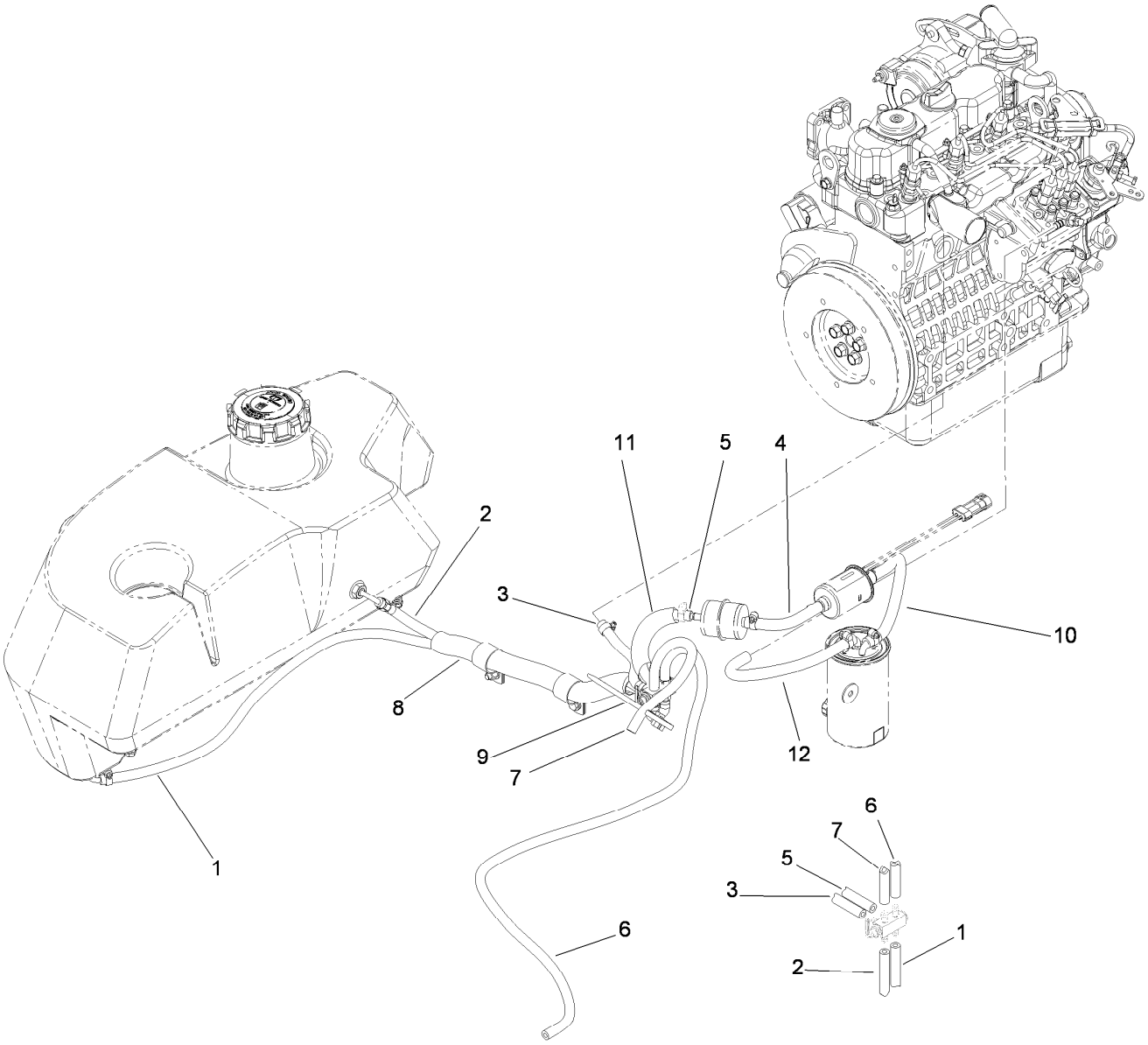

Fuel Line Assembly

Ref.	Part Number	Qty.	Description
1	108-5376	1	Hose-Fuel
2	109-0301	1	Hose-Fuel
3	109-0306	1	Hose-Fuel
4	108-3283	1	Hose-Fuel
5	109-0303	1	Hose-Fuel
6	109-0275	1	Hose-Fuel
7	109-0297	1	Hose-Fuel
8	108-5377	1	Sleeve-Fabric
9	1-303335	1	Tie-Plastic
10	110-4124	1	Hose-Fuel
11	114-8224	1	Conduit-Fuel Line
12	110-4105	1	Hose-Fuel

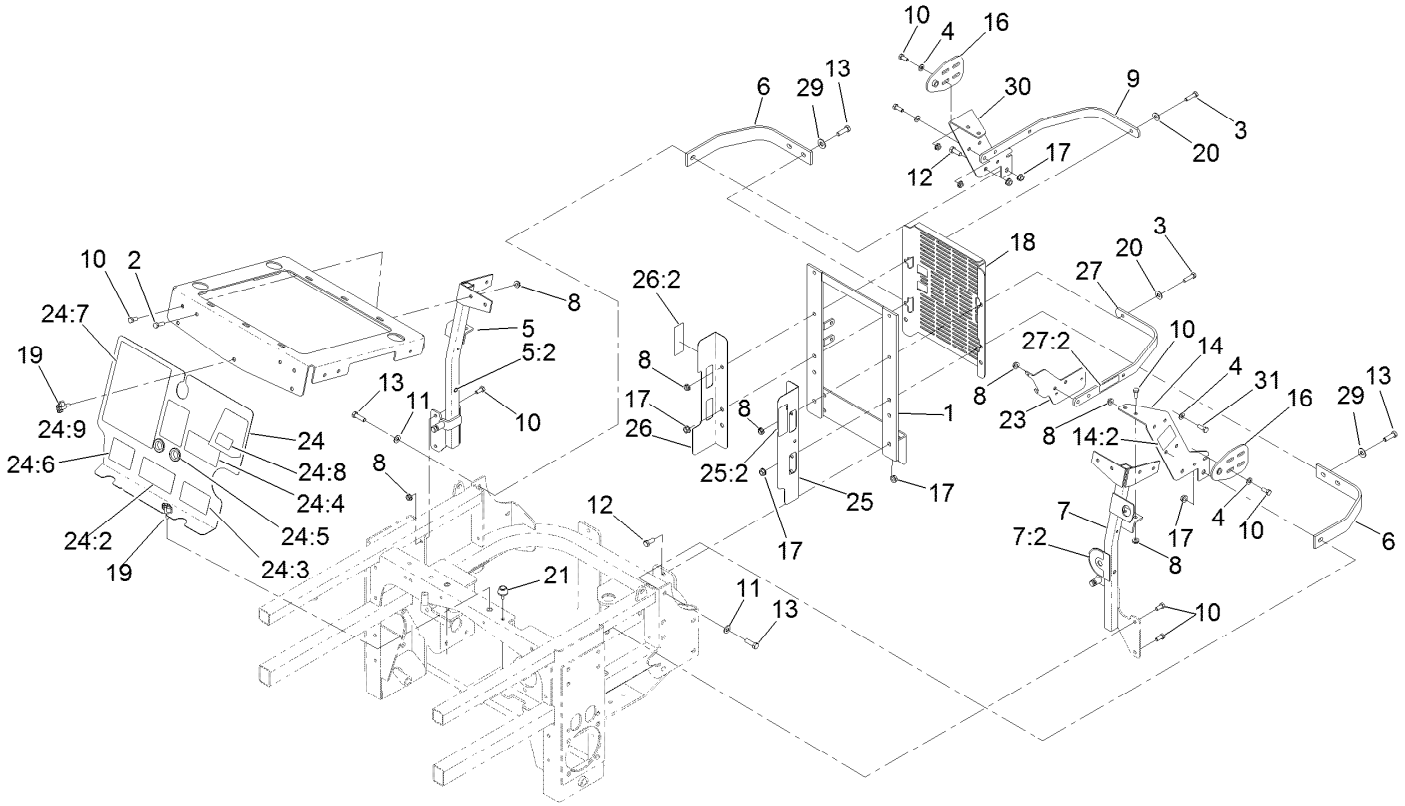

Engine Housing Assembly

Ref.	Part Number	Qty.	Description
1	107-9934-03	1	Support-Radiator, Rear
2	322-5	2	Screw-HH
3	322-6	2	Screw-HH
4	3256-23	8	Washer-Plain
5	114-1170	1	RH Radiator Brace ASM
5:2	32148-11	1	Insert-Threaded
6	103-7623-03	2	Strap-Guard
7	110-3870	1	LH Radiator Brace ASM
7:2	107-2114	1	Decal-Valve, Fuel
8	32128-20	22	Nut-HF
9	114-8223-03	1	Top-Rib
10	322-3	14	Screw-HH
11	3256-24	3	Washer-Flat
12	323-6	3	Screw-HH
13	323-7	4	Screw-HH
14	119-6650	1	LH Support Bracket ASM
14:2	119-0398	1	Decal-Fuse
16	108-5345-03	2	Plate-Pivot, Hood
17	3290-357	7	Nut-HHF, Whiz
18	112-8302-03	1	Shield-Cooler
19	98-8332	3	Knob
20	3256-3	2	Washer-Flat

Ref.	Part Number	Qty.	Description
21	109-2365	2	Bumper-Rubber
23	119-0393-03	1	Bracket-Relay, Fuse
24	108-5936	1	Front Engine Shield ASM
24:2	110-3853	1	Decal-Danger, Rotating Devices
24:3	108-5955	1	Decal-Routing, Hydro Belt
24:4	110-3852	1	Decal- Warning, Buzzer
24:5	100-3815	2	Grommet-Rubber
24:6	108-5957	1	Decal-Routing, Clutch Belt
24:7	110-3851	1	Decal-Check, Service
24:8	110-0806	1	Decal-Caution
24:9	104-2449	1	Decal-Coolant
25	110-0879	1	Guard-Fan, LH (CE)
25:2	107-7719	1	Decal-Danger
26	110-0888	1	Guard-Fan, RH (CE)
26:2	107-7719	1	Decal-Danger
27	119-0399	1	Top Strap ASM
27:2	119-0397	1	Decal-Relay
29	3256-4	2	Washer-Flat
30	108-5339-03	1	Bracket-Support, RH
31	322-4	4	Screw-HH

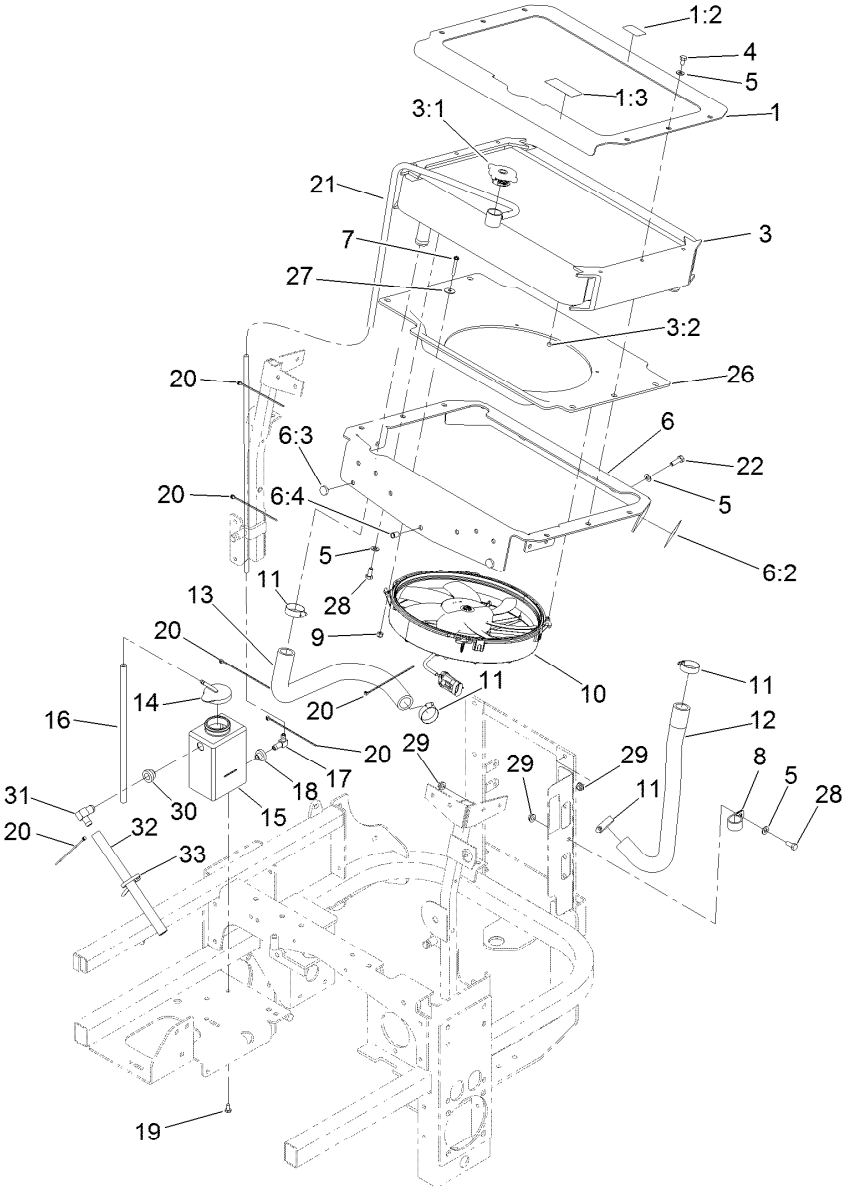

Cooling System Assembly

Ref.	Part Number	Qty.	Description
1	112-8305	1	Top Radiator Plate ASM
1:2	106-5517	1	Decal-Warning
1:3	110-3842	1	Decal-Antifreeze
3	108-5382	1	Radiator ASM
3:1	114-8202	1	Cap-Radiator
3:2	99-8551	1	Plug-Pipe
4	322-1	6	Screw-HH
5	3256-23	16	Washer-Plain
6	112-8306	1	Bottom Rad Plate ASM
6:2	107-7719	2	Decal-Danger
6:3	32148-6	1	Insert-Nut
6:4	1-513658	2	Bumper
7	1-803067	4	Screw
8	1-643312	1	Clip-Loom
9	1-804254	4	Nut-Lock, HH
10	112-4172	1	Fan-Hi Performance
11	2412-34	4	Clamp-Hose
12	108-5372	1	Hose-Radiator, LH

Ref.	Part Number	Qty.	Description
13	112-8314	1	Hose-Radiator, RH
14	1-643164	1	Cap-Tank, Overflow
15	117-0941	1	Tank-Overflow
16	1-603954	1	Hose-Line, Fuel
17	46-6550	1	Fitting-Elbow-90
18	1-513645	1	Bushing-Valve, Fuel
19	321-2	2	Screw-HH
20	1-303287	6	Tie-Cable
21	103-1428	1	Hose-Overflow
22	322-5	3	Screw-HH
26	112-8317	1	Shroud
27	3256-67	4	Washer
28	322-3	10	Screw-HH
29	32128-20	3	Nut-HF
30	104-0790	1	Bushing
31	117-0943	1	Fitting-Elbow
32	115-4969	1	Hose-Overflow
33	1-303335	1	Tie-Plastic

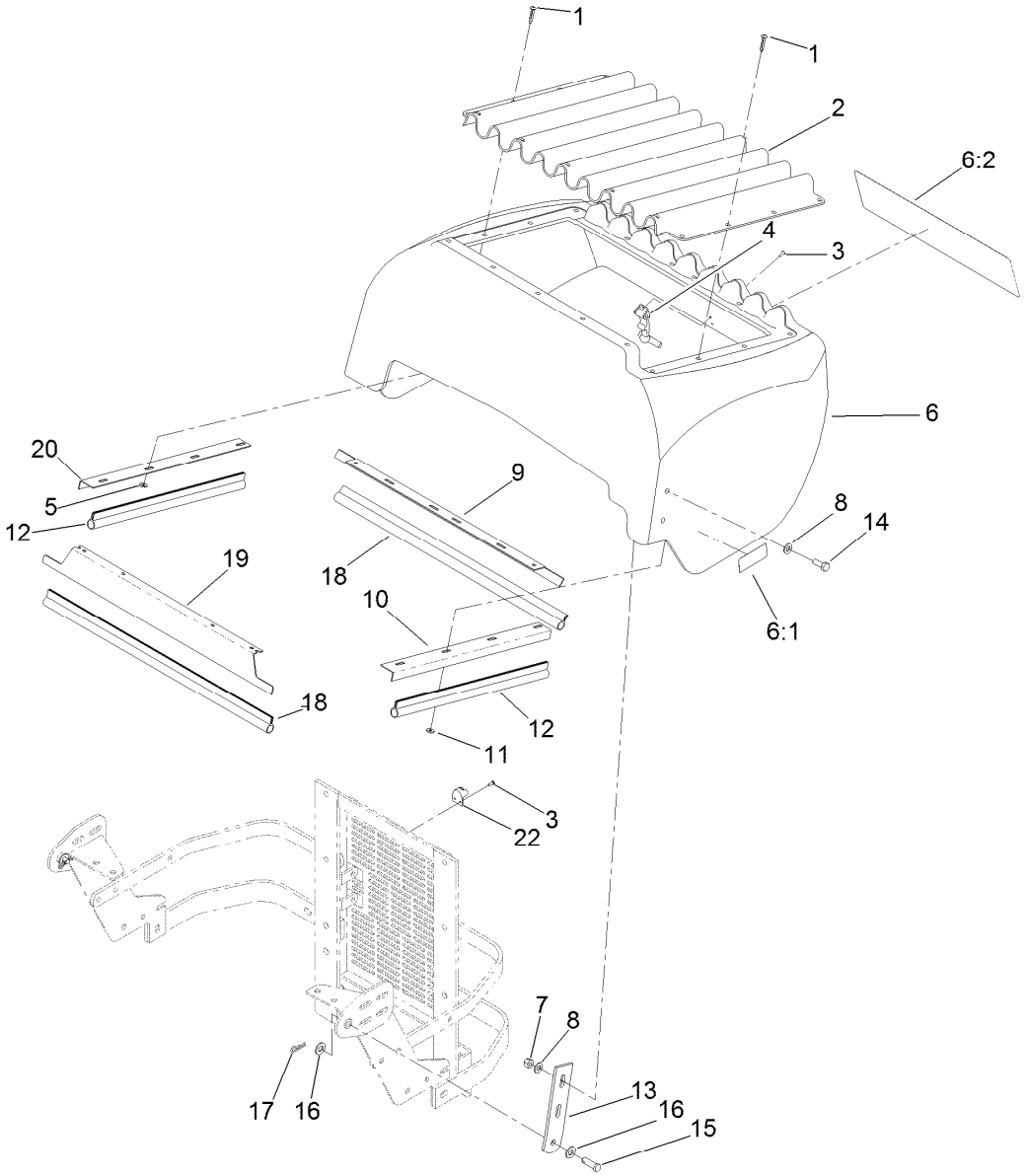

Hood Assembly

Ref.	Part Number	Qty.	Description
1	1-803072	17	Rivet
2	1-633864-03	1	Screen-Radiator
3	923786	4	Rivet
4	1-643188	1	Latch-Rubber
5	1-303435	4	Washer-Spring
6	114-8225	1	Hood ASM
6:1	114-9600	2	Decal-Low Sulfur
6:2	136-5521	1	Decal
7	3296-29	4	Nut-Lock, NI
8	3256-23	8	Washer-Plain
9	1-643108-03	1	Angle-Radiator, Bottom
10	1-643105-03	1	Angle-Radiator, LH
11	3256-14	12	Washer-Flat
12	1-643186	2	Seal-Trim
13	108-5337-03	2	Plate-Hinge, Hood
14	322-4	4	Screw-HH
15	1-808285	2	Pin-Clevis
16	3256-24	4	Washer-Flat
17	1-806003	2	Pin-Cotter
18	1-643187	2	Seal-Trim
19	117-6166-03	1	Bracket Seal, Radiator Front
20	1-643106-03	1	Angle-Radiator, RH
22	1-643189	1	Keeper-Latch, Rubber

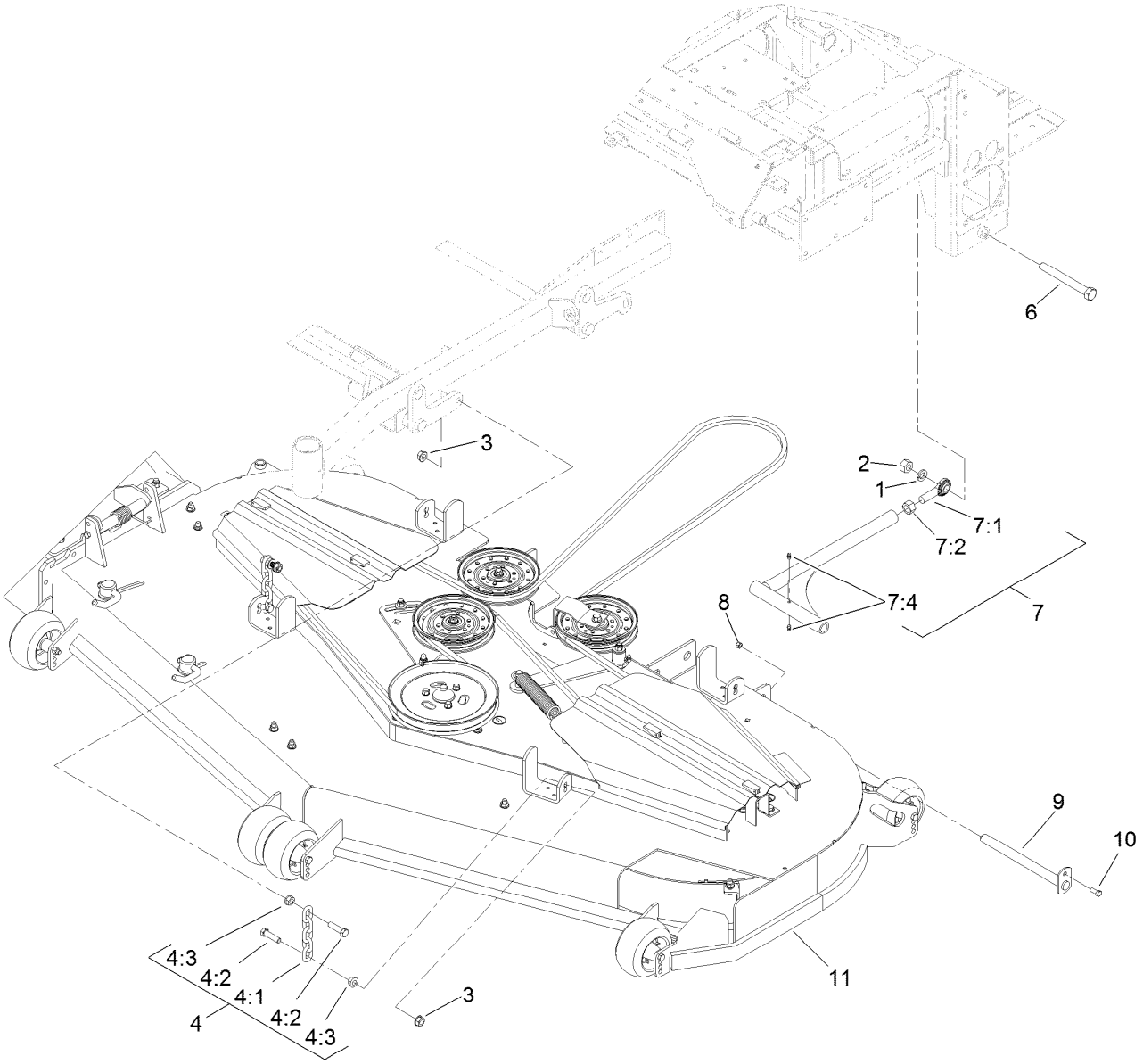

Deck Connection Assembly

Ref.	Part Number	Qty.	Description
1	3253-8	2	Washer-Lock
2	3217-11	2	Nut-Hex
3	32128-37	8	Nut-HF
4	103-9792	4	Deck Chain ASM
4:1	1-633447	1	Chain-Lift, Deck
4:2	103-1898	2	Screw-HH
4:3	32128-37	2	Nut-HF
6	327-28	2	Screw-HH

Ref.	Part Number	Qty.	Description
7	108-5969	2	Strut ASM
7:1	1-633029	1	Balljoint-Spherical
7:2	3219-6	1	Nut-Hex
7:4	109-1380	1	Fitting-Grease
8	3296-29	2	Nut-Lock, NI
9	1-632199-01	2	Pin-Strut
10	322-3	2	Screw-HH
11		1	Deck ASM ●

● Not serviced separately

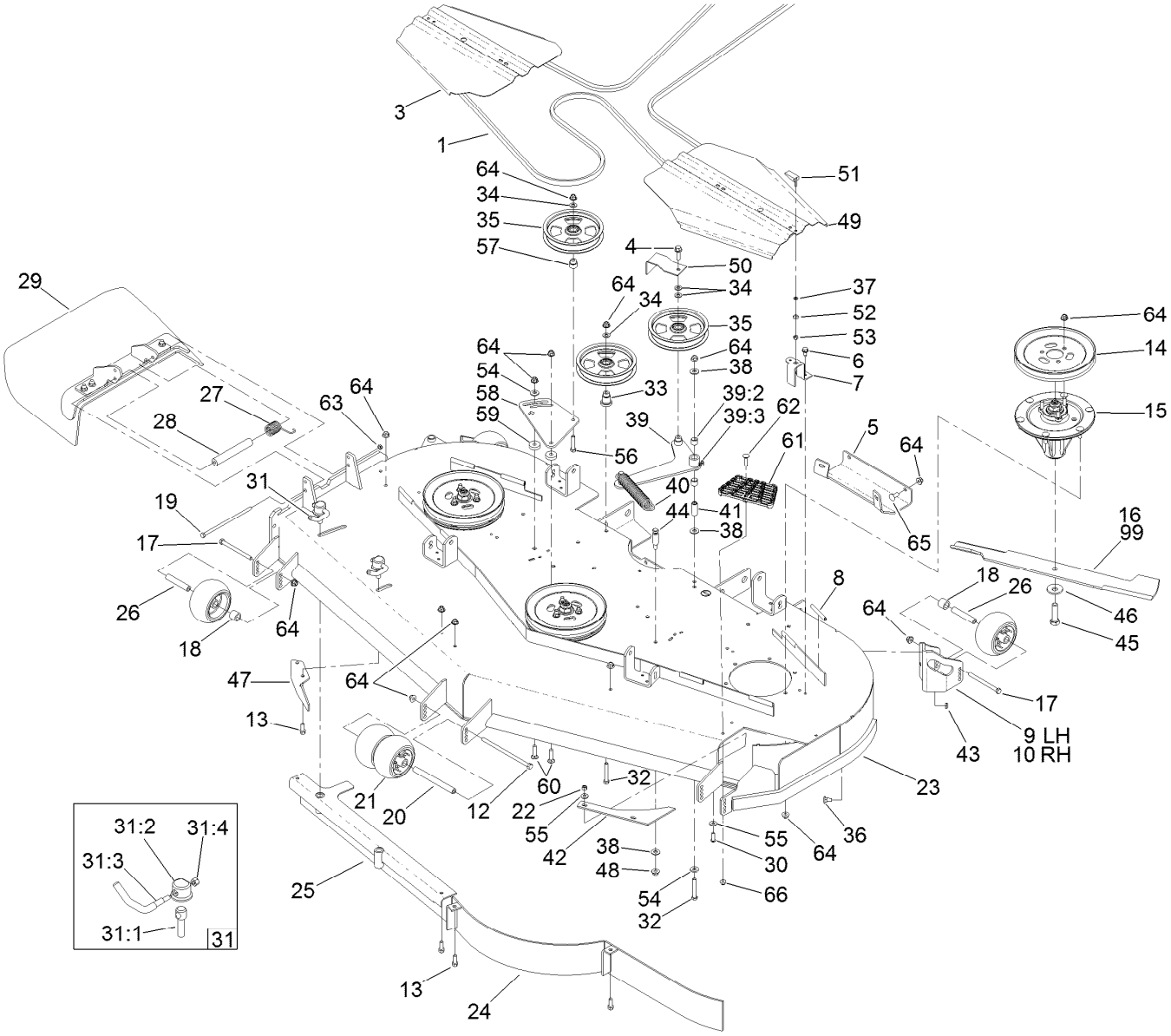

Deck Assembly

Ref.	Part Number	Qty.	Description
1	105-7790	1	Belt
3	112-8667-03	1	Cover-Belt, RH
4	3234-24	1	Screw-HHF
5	106-3279-01	1	Plate-Skid
6	32144-70	4	Screw-HWHTF
7	119-4220-01	4	Bracket-Cover
8	105-7699	8	Strip-Seal
9	106-7354-01	1	Mount-Wheel, LH
10	106-7355-01	1	Mount-Wheel, RH
12	108-5388	1	Screw-HH
13	92-1624	6	Screw-HWH
14	105-7733	3	Pulley
15	127-0560	3	Spindle ASM
16	105-7784-03	3	Blade-Hi Flow, 24.5 Inch
17	323-23	4	Screw-HH
18	98-7913	4	Tube-Spacer
19	322-50	1	Screw-HH
20	98-5967	1	Spacer-Wheel
21	1-603299	6	Roller-Scalp, Anti
22	3296-29	2	Nut-Lock, NI
23	114-4483	1	Deck Decal ASM

Ref.	Part Number	Qty.	Description
24	105-7730-01	1	Baffle
25	127-4858-01	1	Baffle ASM
26	98-7912	4	Tube-Spanner
27	108-4052	1	Spring-Torsion
28	105-4622	1	Spacer
29	108-2792	1	Rubber Deflector ASM
30	3274-104	2	Screw-HSBH
31	107-1664	2	Lever ASM
31:1	106-3239	1	Screw-Lock
31:2	107-1644	1	Cap-Lock
31:3	106-3241	1	Lever-Lock
31:4	3296-29	1	Nut-Lock, NI
32	323-12	2	Screw-HH
33	106-3214	1	Mount-Pulley
34	3256-24	4	Washer-Flat
35	132-9424	3	Pulley-Idler, Flat
36	3231-1	6	Screw-CARR
37	99-3058	4	Washer
38	3256-4	3	Washer-Flat
39	108-5949	1	Deck Idler Arm ASM
39:2	103-4681	2	Sleeve-Bearing

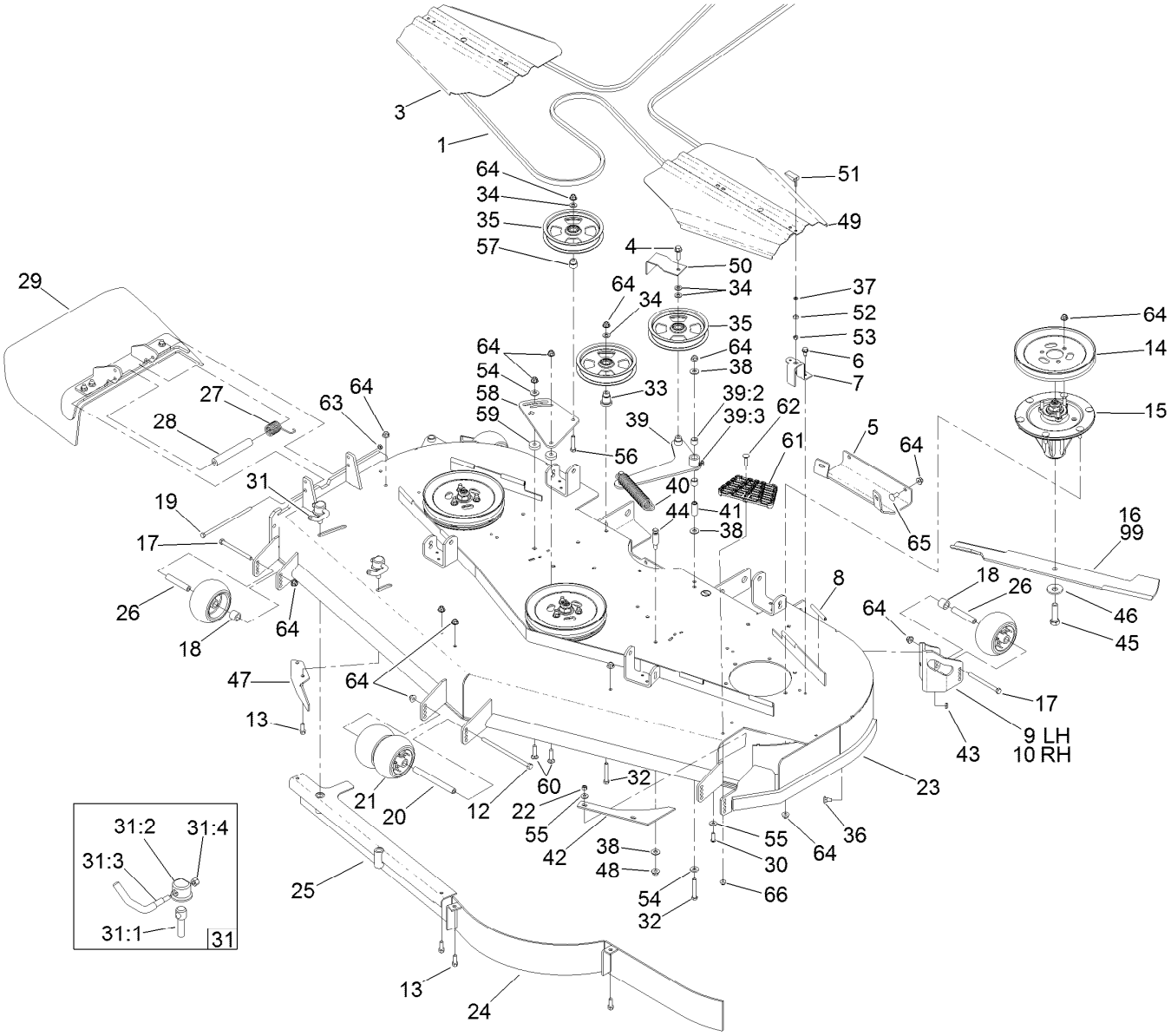

Deck Assembly (continued)

Ref.	Part Number	Qty.	Description
39:3	302-40	1	Fitting-Grease, 90 DEG
40	119-0392	1	Spring-Extension
41	1-603044	1	Bushing
42	107-3138	1	Plate-Turbo
43	3296-59	6	Nut-Lock, NI
44	110-0801	1	Pin-Threaded, Spring Anchor
45	51-4060	3	Screw-Blade
46	103-0865	3	Washer-Blade Bolt, Heavy
47	106-3216-01	1	Baffle-Discharge
48	32128-19	1	Nut-HF
49	112-8666-03	1	Cover-Belt, LH
50	108-7220-01	1	Guide-Belt
51	106-6777	4	Handle-Latch, Swell
52	106-6778	4	Bushing-Latch, Swell
53	1-804254	4	Nut-Lock, HH
54	98-5975	2	Washer-Belleville

Ref.	Part Number	Qty.	Description
55	1-303334	4	Washer-Spring
56	323-9	1	Screw-HH
57	1-603496	1	Bushing-Idler
58	105-7787-01	1	Plate-Idler
59	105-7788	2	Spacer
60	3231-4	2	Screw-CARR
61	126-4781-03	1	Step-Deck
62	3230-3	1	Screw-CARR
63	3296-47	1	Nut-Lock, NI
64	104-8301	47	Nut-HF, NI
65	3231-27	4	Screw-CARR
66	104-8300	1	Nut-HF, NI
99	105-7719-03	3	Blade-Atomic, 24.5In
99	105-7712-03	3	Blade-Lo Flow, 24.5In
99	105-7711-03	3	Blade-Mid Flow, 24.5In
99	105-7778-03	3	Blade-Recycler, 24.5In

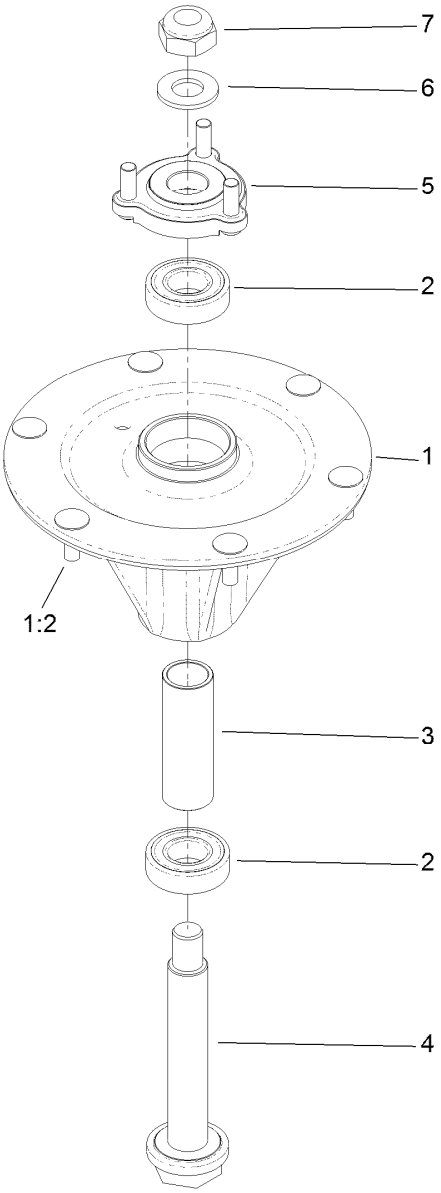

Spindle Assembly No. 127-0560

Ref.	Part Number	Qty.	Description
1		1	Spindle Housing ASM W/Studs ●
1:2	114-8195	6	Bolt-Ribbed Neck
2	116-0720	2	Bearing-Ball
3	127-0554	1	Spacer-Bearing
4	127-0556	1	Shaft-Spindle, Ball Bearing
5	127-0557	1	Hub-Spindle (W/Studs)
6	92-5836	1	Washer
7	3296-67	1	Nut-Lock, NI

● Not serviced separately

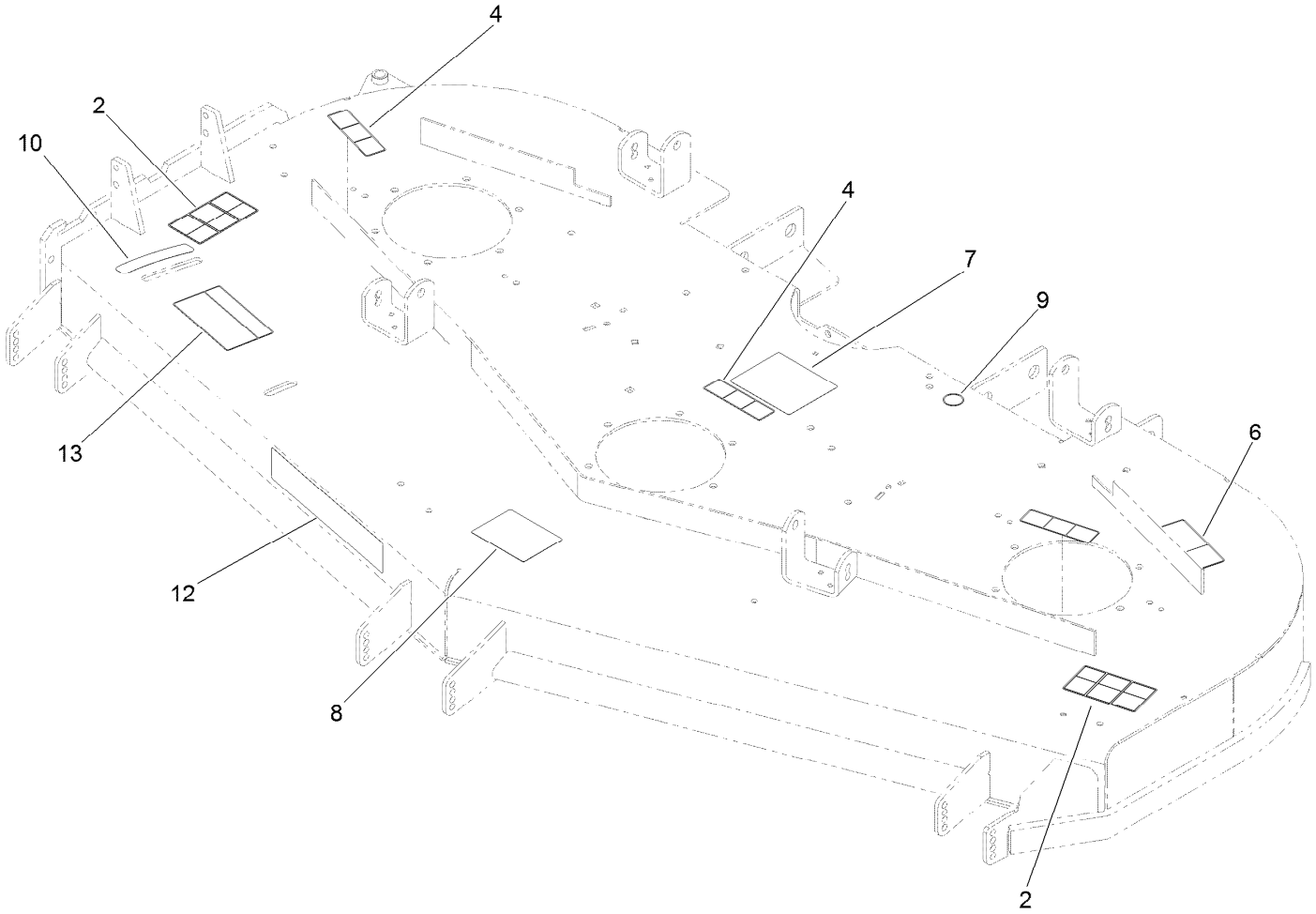

Deck Decal Assembly No. 114-4483

Ref.	*Part Number*	*Qty.*	*Description*
2	117-3848	2	Decal-Danger
4	112-9028	3	Decal-Missing, Cover
6	93-7818	1	Decal-Torque, Blade Bolt
7	108-5981	1	Decal-Routing, Belt
8	127-0326	1	Decal-Scalp, Anti
9	58-6520	1	Decal-Grease
10	110-2067	1	Decal-Setting, Baffle
12	107-1620	1	Decal
13	110-2068	1	Decal-Adjustment, Baffle

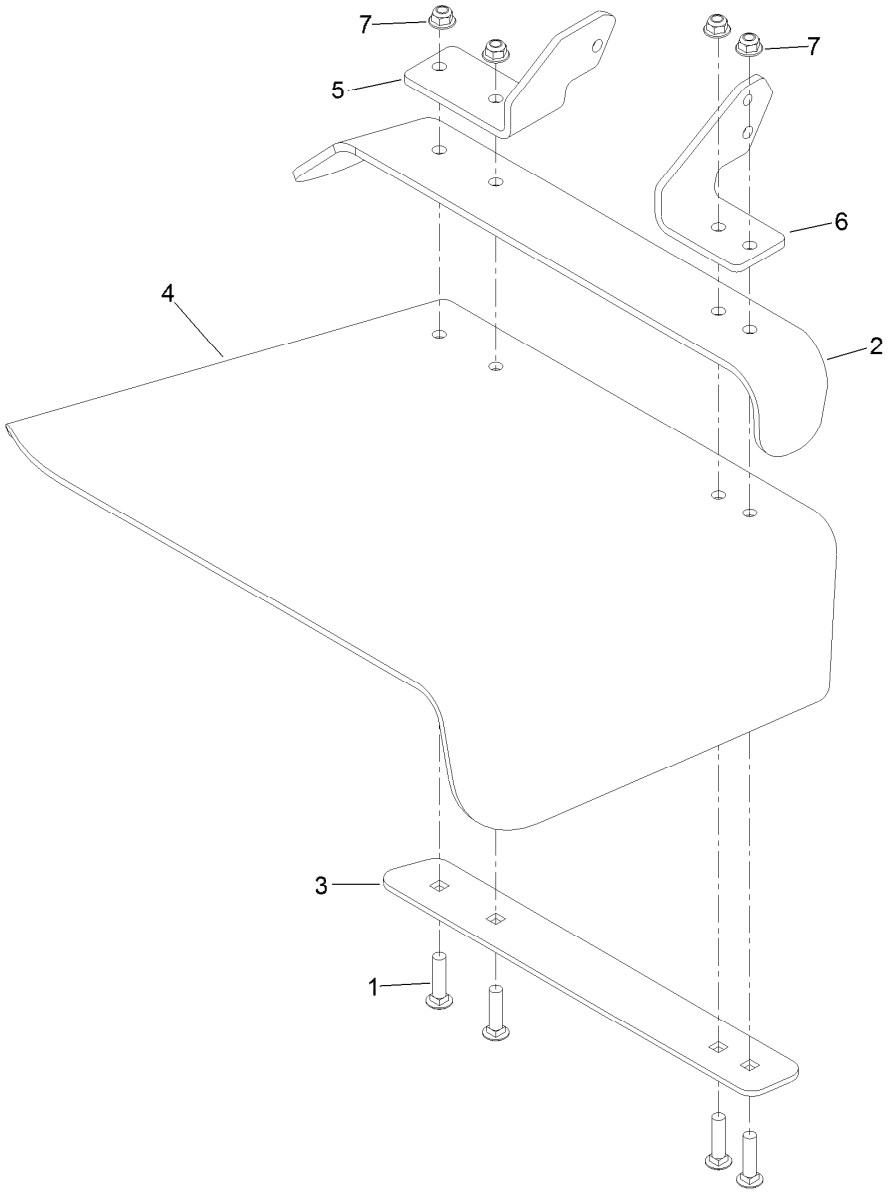

Rubber Deflector Assembly No. 108-2792

Ref.	Part Number	Qty.	Description
1	3231-4	4	Screw-CARR
2	106-3246-01	1	Deflector
3	106-3248-03	1	Strap-Discharge
4	108-5029	1	Deflector-Rubber
5	108-4059-01	1	Plate-Hinge, Rear
6	106-3253-01	1	Plate-Hinge, Front
7	104-8301	4	Nut-HF, NI

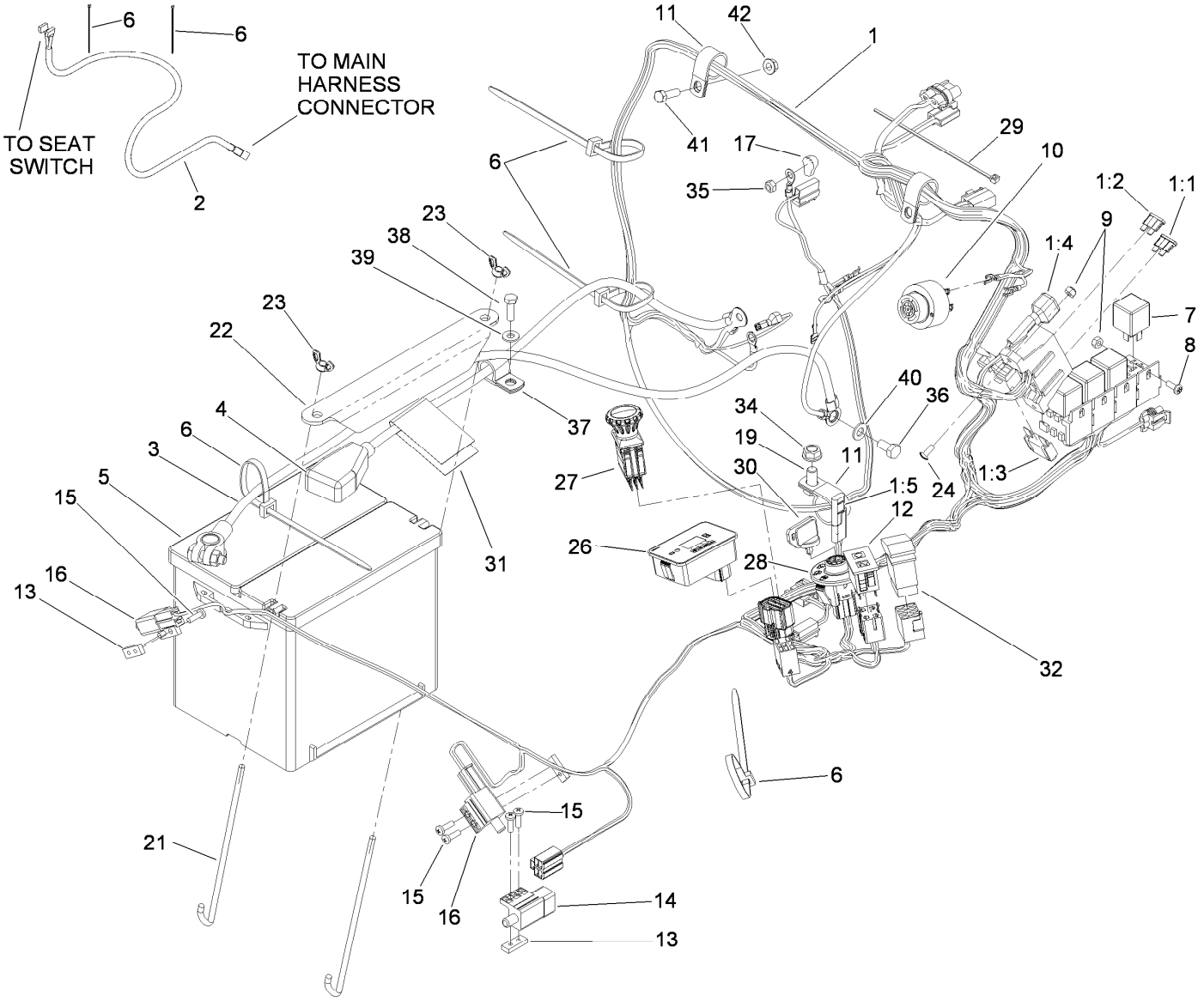

Electrical Assembly

Ref.	Part Number	Qty.	Description
1	119-0351	1	Harness-Wire
1:1	218-578	1	Fuse-Blade, 10 Amp
1:2	109103	1	Fuse-Blade, 30 Amp
1:3	94-8002	1	Fuse-Blade, 50 Amp
1:4	100-4918	1	Diode
1:5	116-0053	1	Cap-Plug
2	103-1227	1	Harness-Wiring, Seat
3	110-0303	1	Cable-Battery, Negative
4	110-0304	1	Cable-Battery, Positive
5	106-5187	1	Battery-Dry
6	1-303335	7	Tie-Plastic
7	1-643275	4	Relay
8	1-803071	2	Screw
9	3296-2	4	Nut-Lock, NI
10	103-0205	1	Alarm-Tone, Dual
11	1-643312	3	Clip-Loom
12	100-8071	1	Lamp-Warning
13	1-633181	3	Plate-Tapped
14	1-633111	1	Switch
15	3290-500	6	Screw-PPH
16	1-513051	2	Switch-Open, Normally

Ref.	Part Number	Qty.	Description
17	1-643178	1	Cap-Insulator, Red
19	323-4	1	Screw-HH
21	103-1312	2	Bolt-Holddown
22	103-1311-03	1	Holddown-Battery
23	1-543792	2	Wingnut
24	1-803075	2	Screw-Head, Truss
26	116-5609	1	Module ASM
27	116-0124	1	Switch-PTO, 10 Amp
28	137-4100	1	Switch-Ignition
29	1-303287	1	Tie-Cable
30	63-8360	2	Key-Ignition
31	107-9309	1	Decal-Instructions, Charging
32	110-0811	1	Switch-Rocker
34	3290-357	1	Nut-HHF, Whiz
35	33023-00	1	Nut-Lock
36	33114-016	1	Screw-HH
37	1-633396	2	Clip-Loom
38	321-5	2	Screw-HH
39	3256-22	2	Washer-Flat
40	3256-23	1	Washer-Plain

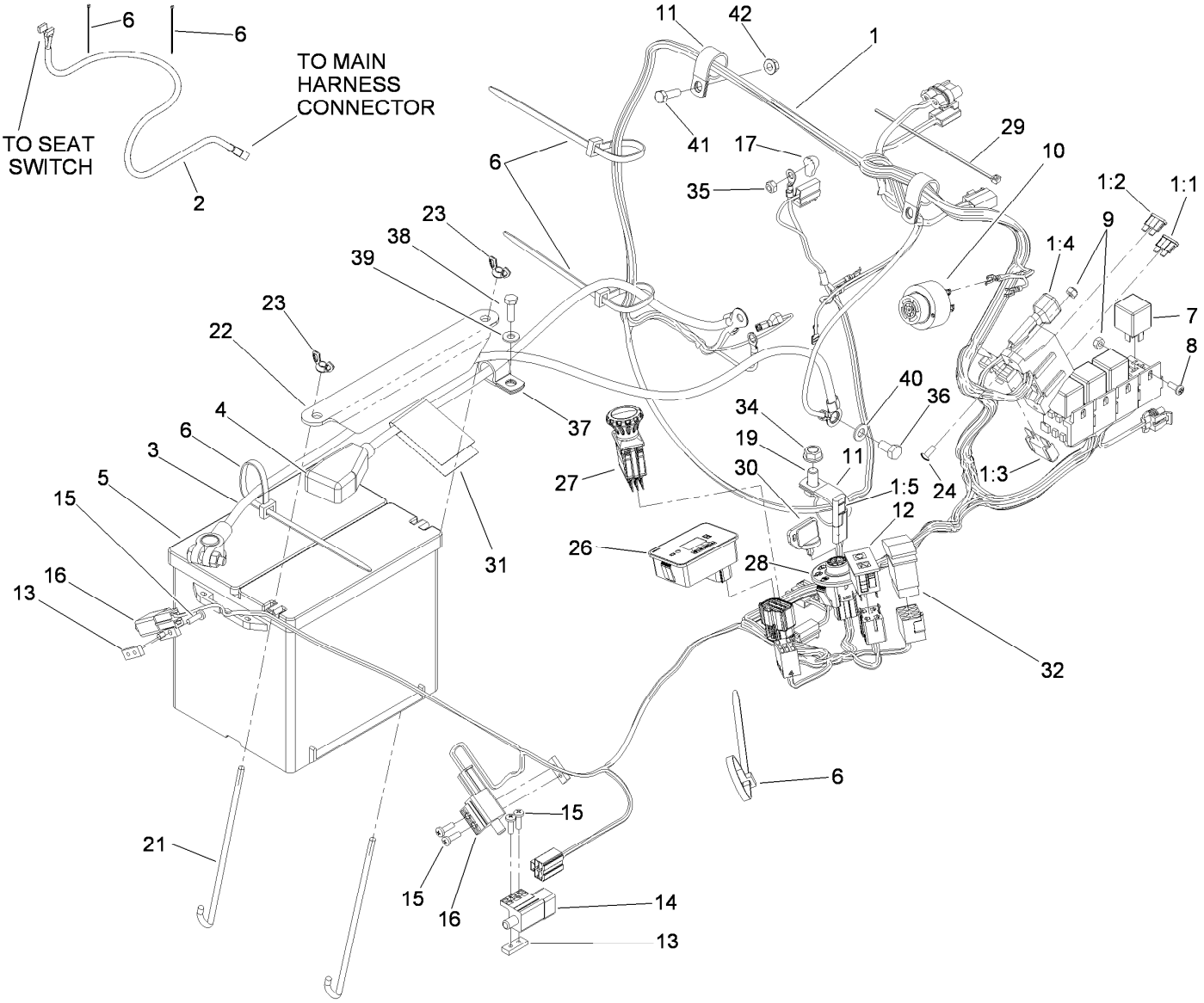

Electrical Assembly (continued)

Ref.	Part Number	Qty.	Description
41	322-5	2	Screw-HH
42	32128-20	2	Nut-HF

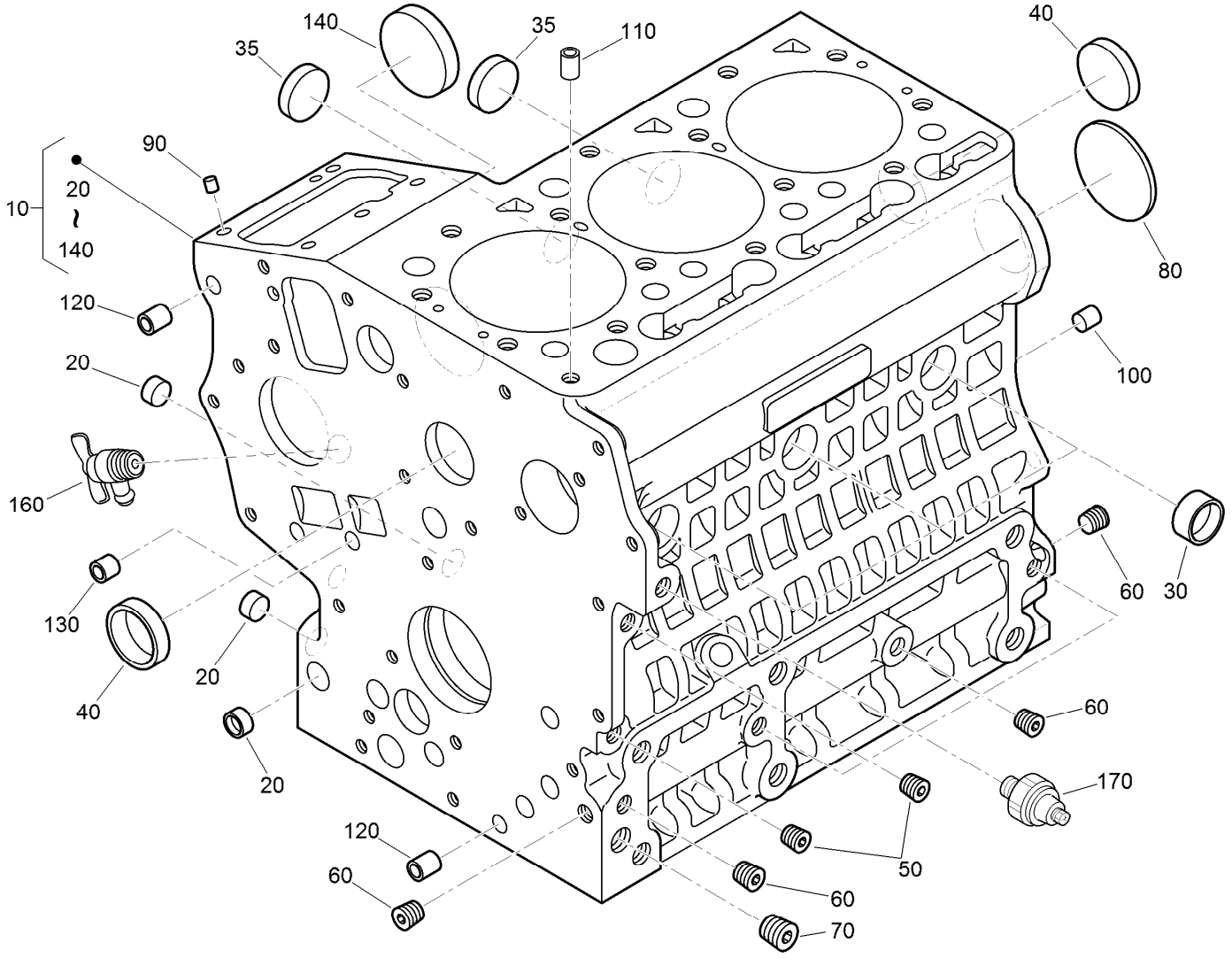

Crankcase Assembly

Ref.	Part Number	Qty.	Description
10	120-3120	1	Crankcase ASM
20	100-2019	3	Cap-Sealing
30	100-2020	3	Cap-Sealing
35	110-3702	2	Cap-Sealing
40	98-9398	2	Cap-Sealing
50	98-9687	5	Plug
60	98-7487	3	Plug
70	98-7488	1	Plug
80	100-1851	1	Plug-Expansion

Ref.	Part Number	Qty.	Description
90	98-9375	2	Pin-Straight
100	98-9377	2	Pin-Straight
110	98-7506	1	Pin-Pipe
120	100-2051	2	Pin-Pipe
130	100-2051	2	Pin-Pipe
140	100-1991	1	Cover-Fuel, Camshaft
160	120-3121	1	Draincock ASM
170	99-3582	1	Thermoswitch

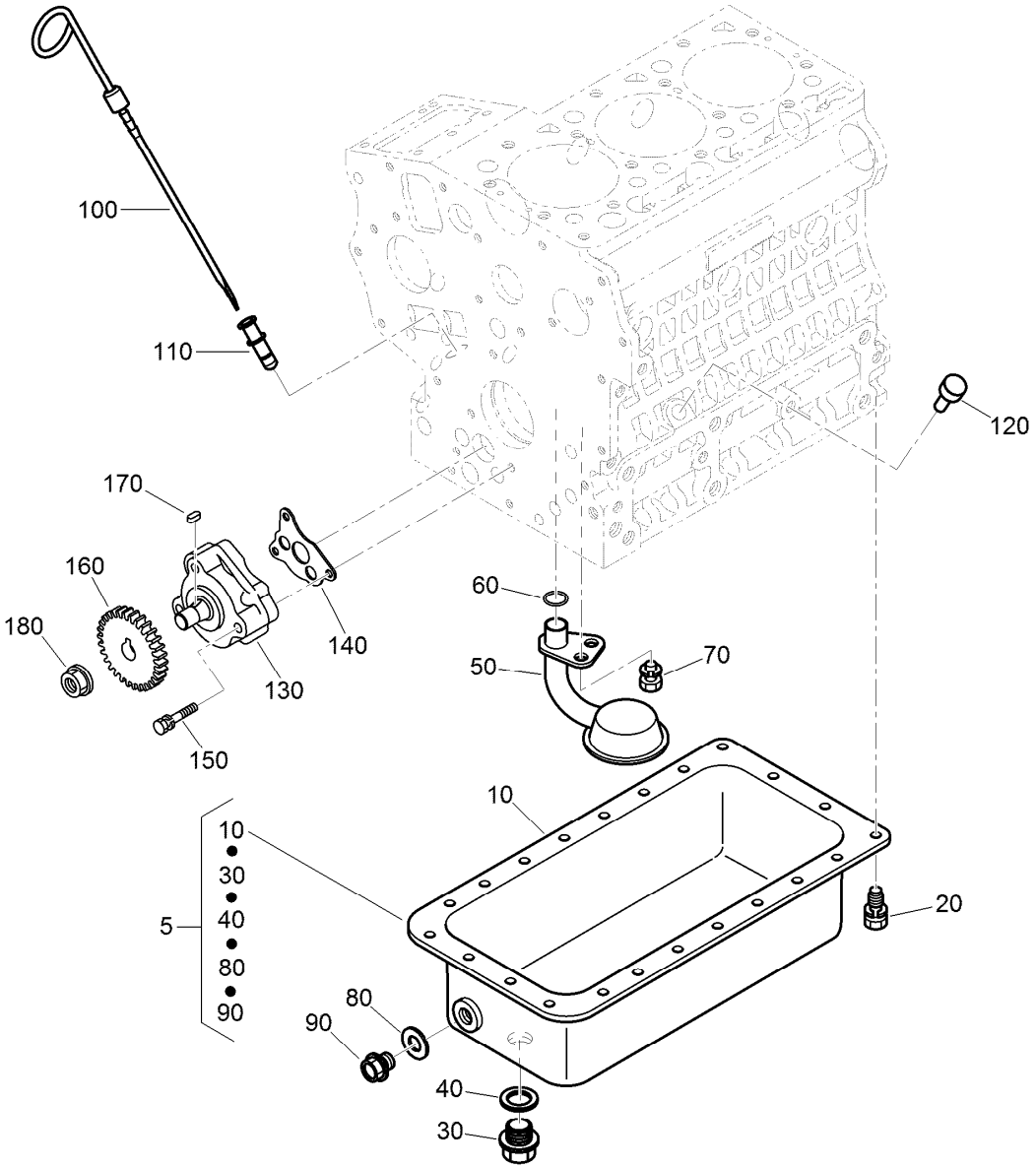

Oil Pan, Oil Pump and Dipstick Assembly

Ref.	Part Number	Qty.	Description
5	112-8327	1	Oil Pan Kit
10	112-2523	1	Pan-Oil
20	98-9350	22	Bolt
30	114-8151	1	Plug-Drain
40	110-9715	1	Gasket-Pan, Oil
50	100-2001	1	Strainer-Pickup, Oil
60	105-3776	1	O-Ring
70	100-9195	1	Bolt
80	98-7524	1	Gasket
90	98-9686	1	Plug-Drain

Ref.	Part Number	Qty.	Description
100	110-3719	1	Gauge-Oil
110	105-4580	1	Guide-Gauge, Oil
120	110-3720	1	Plug-Gauge, Oil
130	100-2002	1	Oil Pump ASM
140	100-2003	1	Gasket-Pump, Oil
150	100-1923	3	Bolt
160	130-1419	1	Gear-Drive, Oil Pump
170	98-7658	1	Key-Feather
180	100-1779	1	Nut-Flange

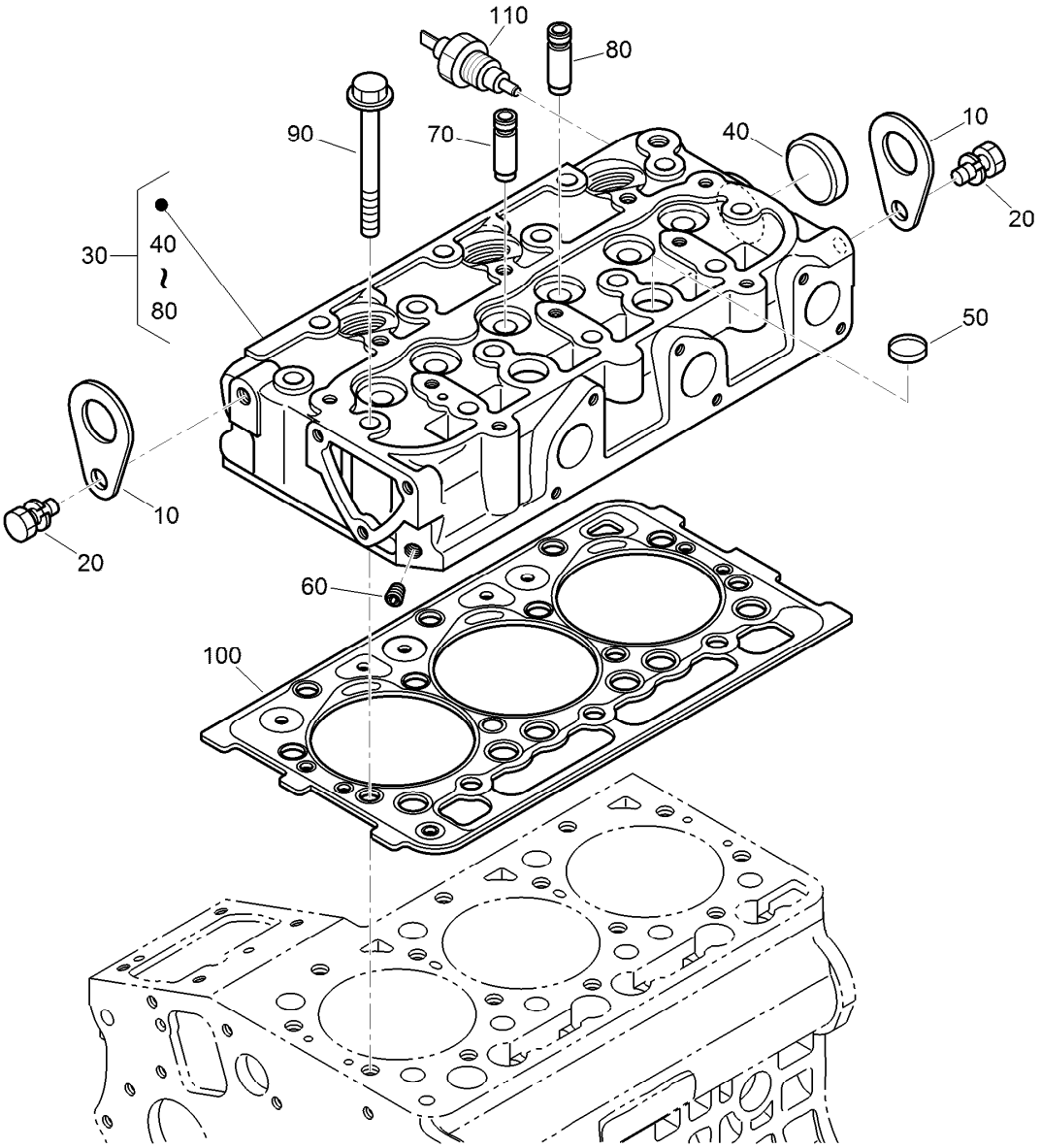

Cylinder Head Assembly

Ref.	Part Number	Qty.	Description
10	98-7531	2	Hook-Engine
20	98-7526	2	Bolt
30	130-1533	1	Cylinder Head ASM
40	105-3705	1	Cap-Sealing
50	98-9389	2	Cap-Sealing
60	98-9687	1	Plug
70	100-1882	3	Guide-Valve, Inlet
80	100-1883	3	Guide-Valve, Exhaust
90	100-1820	14	Bolt-Head, Cylinder
100	112-2520	1	Gasket-Head, Cylinder
110	100-2230	1	Switch-Oil

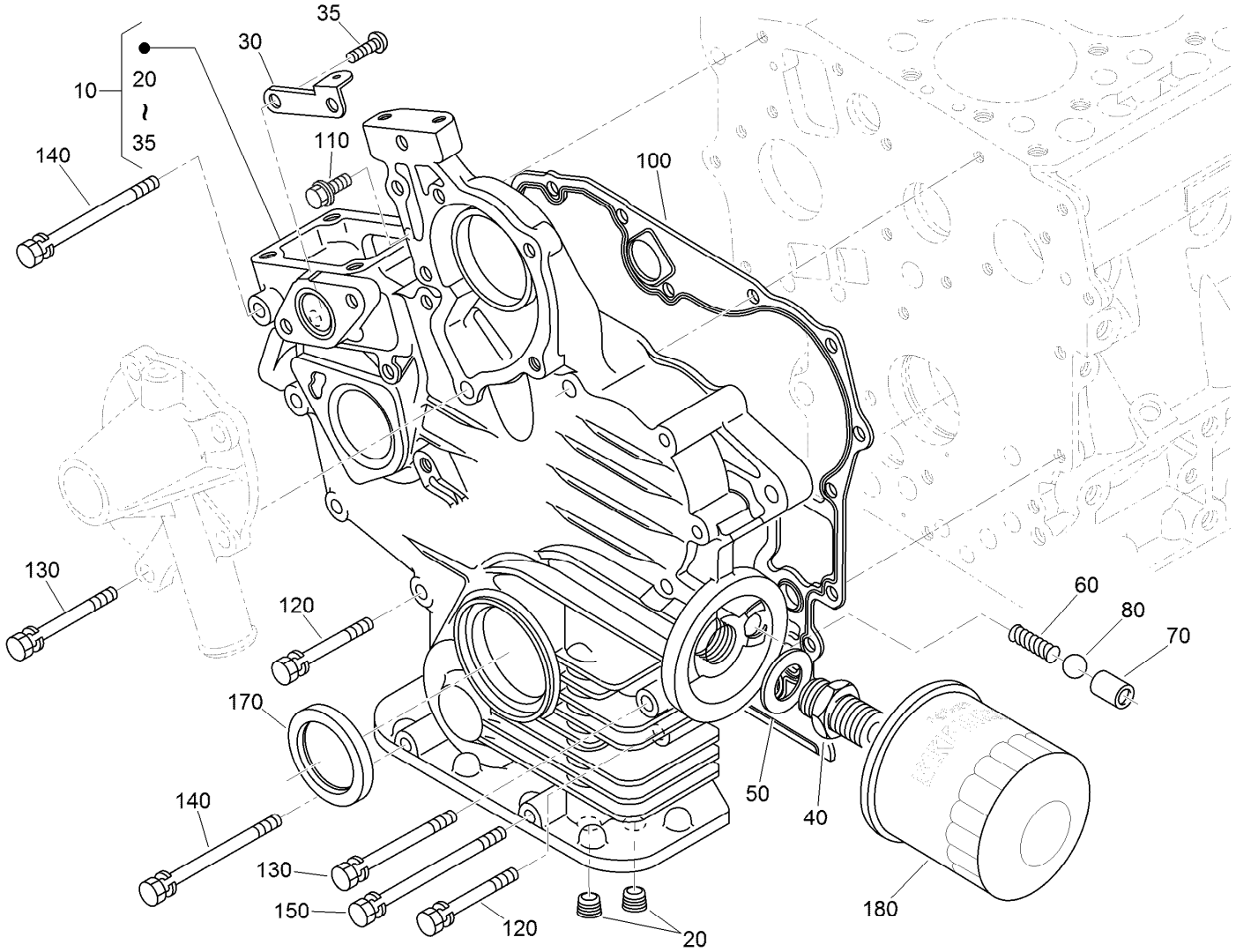

Gear Case and Oil Filter Cartridge Assembly

Ref.	Part Number	Qty.	Description
10	120-3138	1	Gear Case ASM
20	98-7488	2	Plug
30	110-3708	1	Stay-Spring, Start
35	100-2040	2	Screw
40	98-9388	1	Joint-Pipe
50	100-1926	1	Washer-Plain
60	100-2004	1	Spring
70	100-1894	1	Seat-Valve
80	100-1792	1	Ball

Ref.	Part Number	Qty.	Description
100	117-0327	1	Gasket-Case, Gear
110	127-0403	1	Bolt-Flange
120	125-9063	9	Bolt-Sems
130	100-1922	2	Bolt
140	98-9357	2	Bolt
150	110-3710	1	Bolt
170	120-7852	1	Seal-Oil
180	115-8189	1	Filter-Oil, Engine

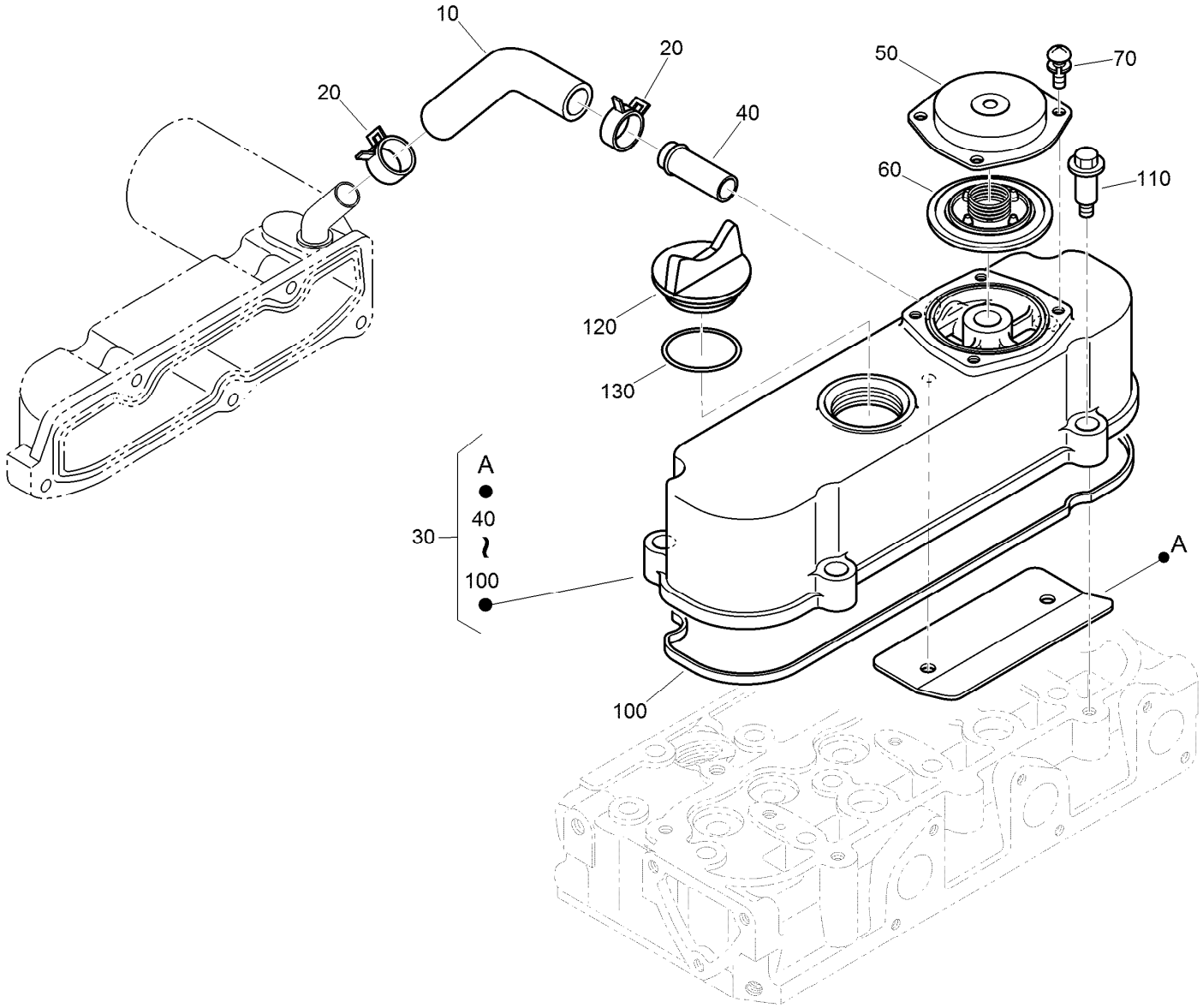

Cylinder Head Cover Assembly

Ref.	Part Number	Qty.	Description
10	120-3139	1	Tube-Breather
20	110-3712	2	Clamp-Hose
30	112-8332	1	Cylinder Head Cover ASM
40	98-9580	1	Pipe-Return, Water
50	110-3714	1	Cover-Breather
60	110-3715	1	Valve-Breather
70	98-9364	4	Screw (With Washer)
100	112-2521	1	Gasket-Cover, Head
110	108-7063	4	Bolt
120	107-9075	1	Plug-Filler, Oil
130	99-3446	1	O-Ring

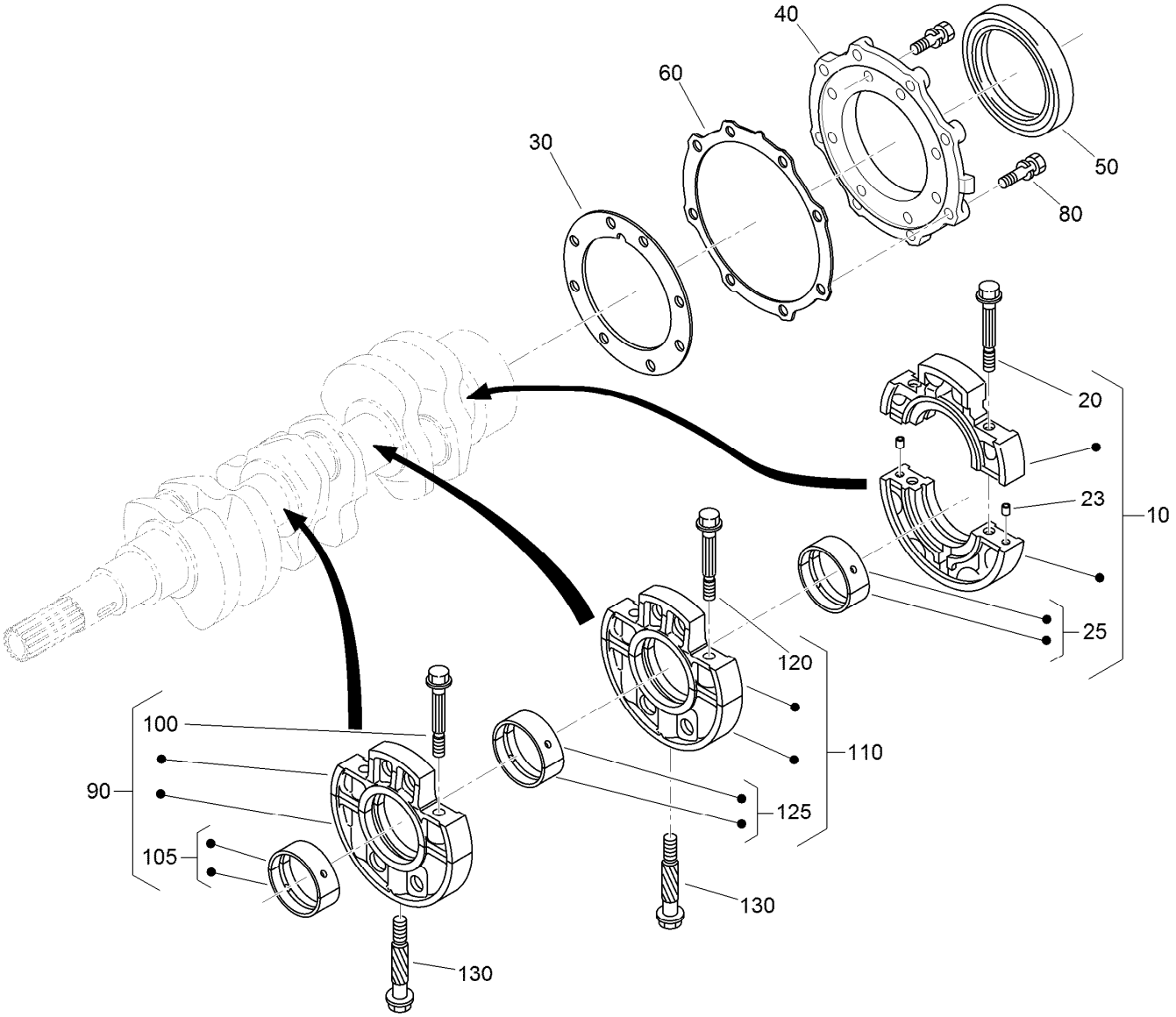

Main Bearing Case Assembly

Ref.	Part Number	Qty.	Description
10	125-9064	1	Wheel Bearing Case ASM
20	125-9065	2	Bolt-Flange
23	125-9082	2	Pin-Straight
25	125-9066	1	Crankshaft Metal ASM (STD)
25	125-9067	1	Crankshaft Metal ASM (-0.20Mm)
25	125-9068	1	Crankshaft Metal ASM (-0.40Mm)
30	117-0304	1	Gasket-Case, Bearing
40	112-8334	1	Cover-Case, Bearing
50	110-3724	1	Seal-Oil
60	100-1876	1	Gasket-Cover, Case
80	100-1750	16	Bolt
90	110-3725	1	Main Bearing Case ASM
100	110-3723	2	Bolt-Case, Bearing

Ref.	Part Number	Qty.	Description
105	110-3741	1	Crankshaft Metal ASM (STD)
105	125-9083	1	Crankshaft Metal ASM (-0.20Mm)
105	110-3743	1	Crankshaft Metal ASM (-0.40Mm)
110	125-9069	1	Main Case Bearing ASM
120	110-3723	2	Bolt-Case, Bearing
125	110-3741	1	Crankshaft Metal ASM (STD)
125	125-9083	1	Crankshaft Metal ASM (-0.20Mm)
125	110-3743	1	Crankshaft Metal ASM (-0.40Mm)
130	100-1874	2	Bolt-Case, Bearing

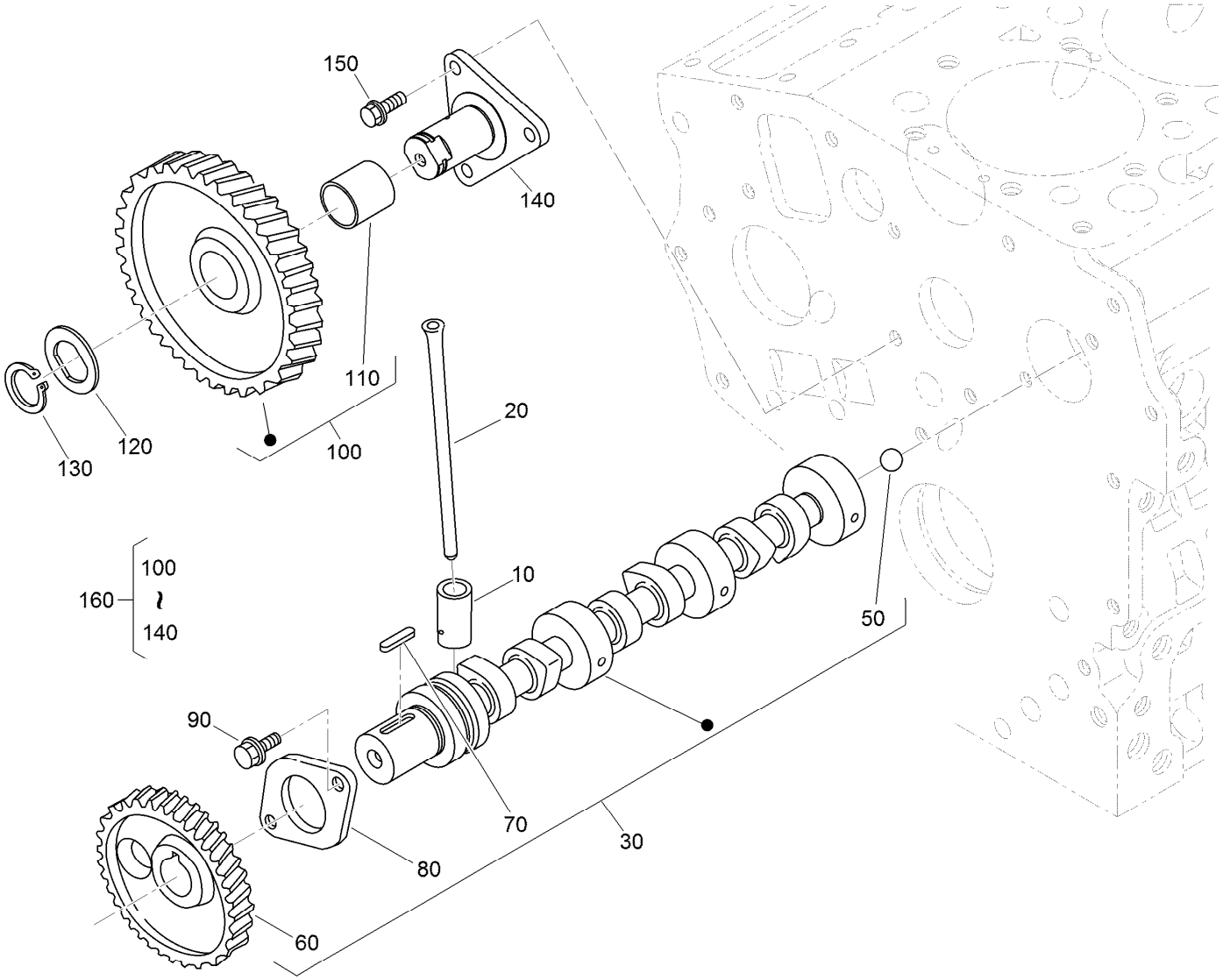

Camshaft and Idle Gear Shaft Assembly

Ref.	Part Number	Qty.	Description
10	110-3727	6	Tappet
20	100-1989	6	Rod-Push
30	117-0305	1	Camshaft ASM
50	110-3729	1	Ball
60	130-1534	1	Gear-Cam
70	98-9378	1	Key-Feather
80	100-1887	1	Stopper-Camshaft
90	98-9350	2	Bolt
100	121-2421	1	Idle Gear ASM
110	121-2422	1	Bushing
120	100-1970	1	Collar-Gear, Idle
130	100-1969	1	Ring-Snap
140	100-1967	1	Shaft-Gear, Idle
150	100-1774	3	Bolt-Flange
160	100-2240	1	Idle Gear ASM

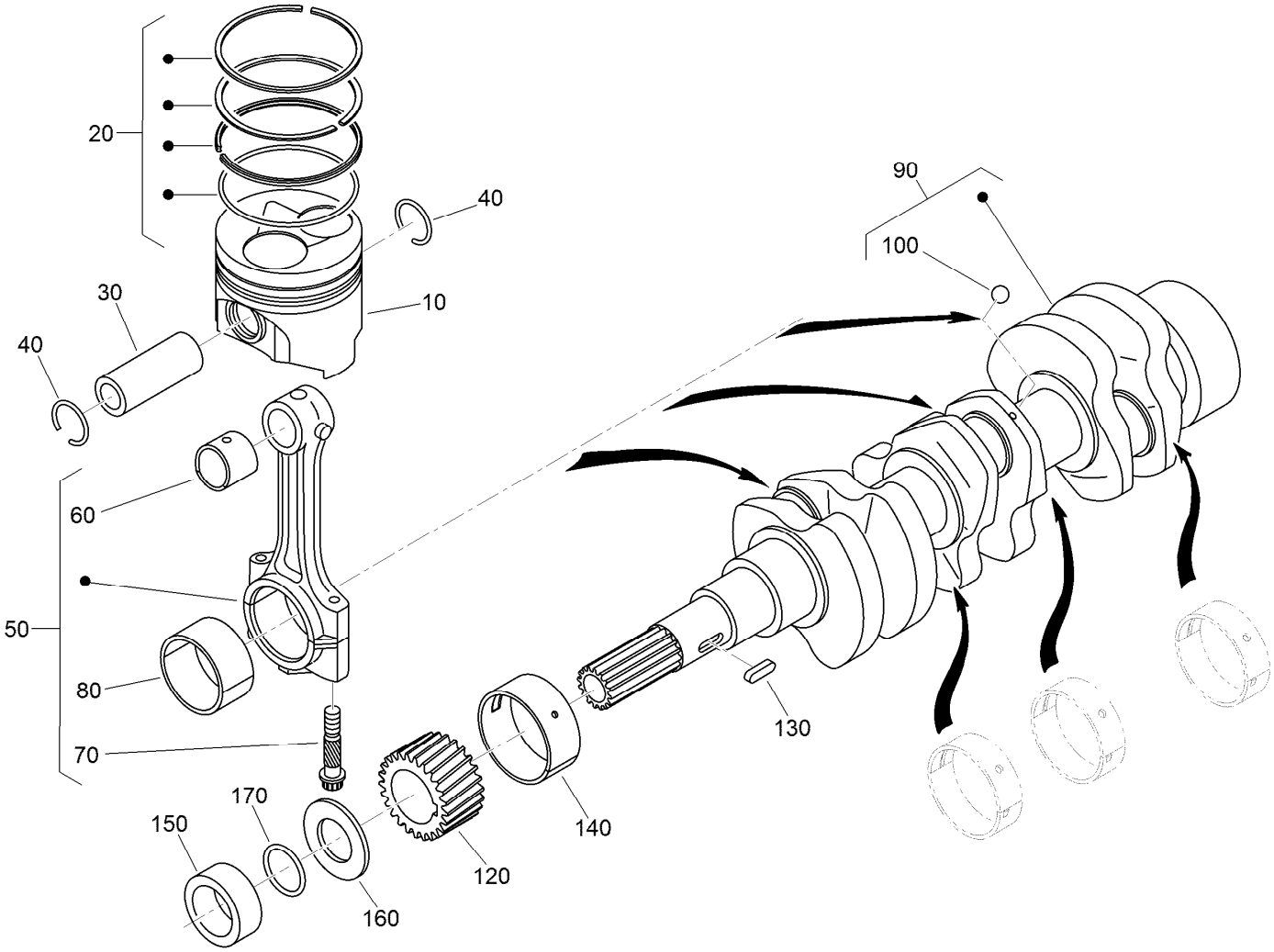

Piston and Crankshaft Assembly

Ref.	Part Number	Qty.	Description
10	130-1537	3	Piston
10	130-1540	3	Piston
20	130-1535	3	Piston Ring ASM
20	130-1536	3	Piston Ring ASM
30	110-3734	3	Pin-Piston
40	100-1835	6	Circlip-Internal
50	125-9070	3	Connecting Rod ASM
60	110-3736	3	Bushing-Pin, Piston
70	100-1999	6	Bolt-Rod, Connecting
80	100-2000	3	Metal-Crankpin (STD)
80	121-3849	3	Metal-Crankpin (-.20Mm)

Ref.	Part Number	Qty.	Description
80	121-2420	3	Metal-Crankpin (-.40Mm)
90	117-0308	1	Crankshaft
100	100-1791	3	Ball
120	100-1891	1	Gear-Crankshaft
130	100-1752	1	Key-Feather
140	110-3738	1	Metal-Crankshaft (STD)
140	121-2424	1	Metal-Crankshaft (-.20Mm)
140	121-2425	1	Metal-Crankshaft (-.40Mm)
150	100-1890	1	Collar-Crankshaft
160	100-1974	1	Slinger-Oil
170	100-2209	1	O-Ring

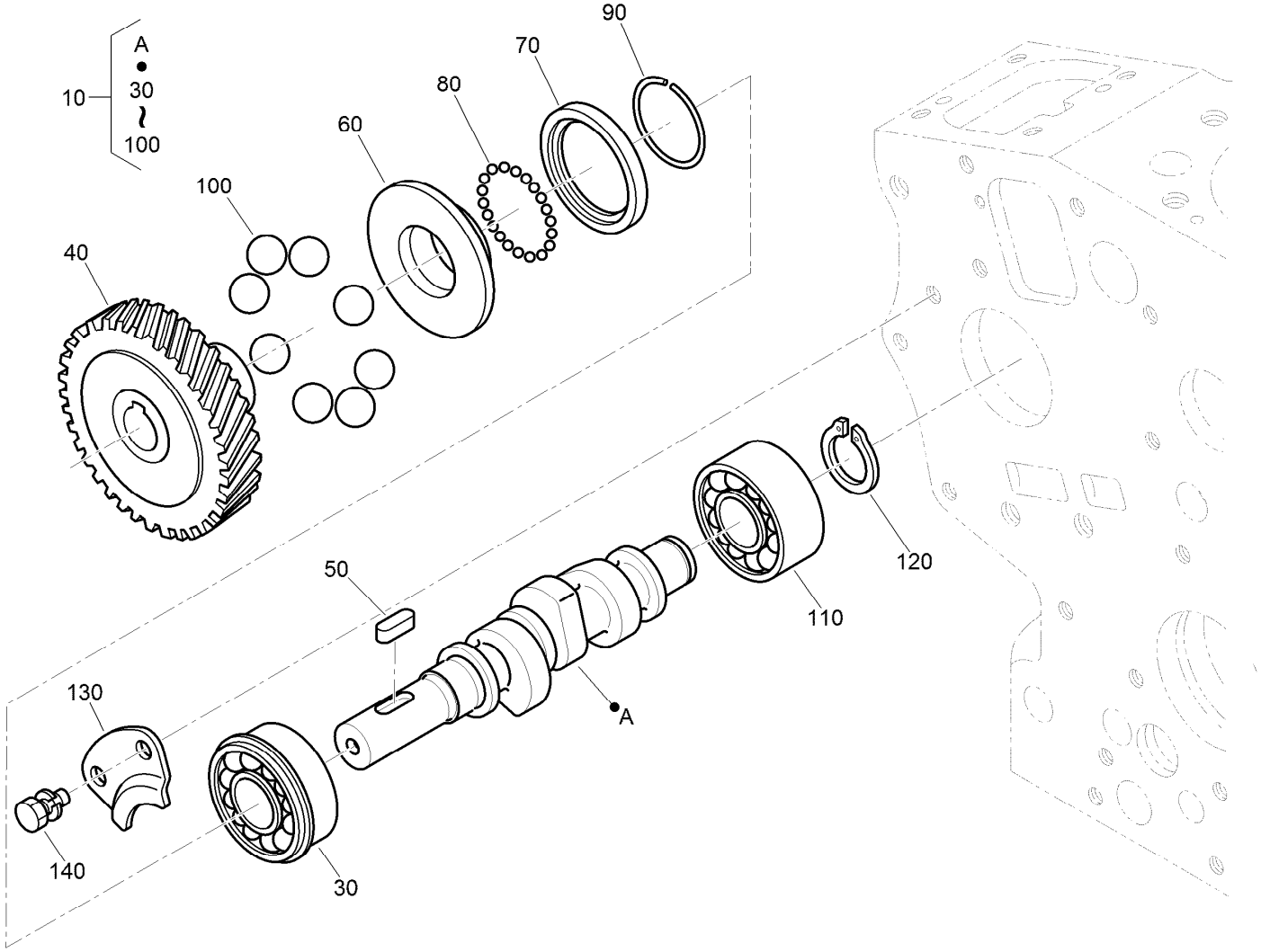

Fuel Camshaft Assembly

Ref.	Part Number	Qty.	Description
10	125-9075	1	Fuel Camshaft ASM
30	100-1795	1	Bearing-Ball
40	100-2006	1	Gear-Pump, Injection
50	100-1752	1	Key-Feather
60	112-8336	1	Sleeve-Governor
70	100-1904	1	Case-Ball, Governor
80	100-1790	32	Ball
90	100-1843	1	Circ-Clip
100	100-1793	8	Ball
110	110-3757	1	Bearing-Ball
120	100-1784	1	Circ-Clip, External
130	100-1888	1	Stopper-Fuel, Camshaft
140	98-9350	2	Bolt

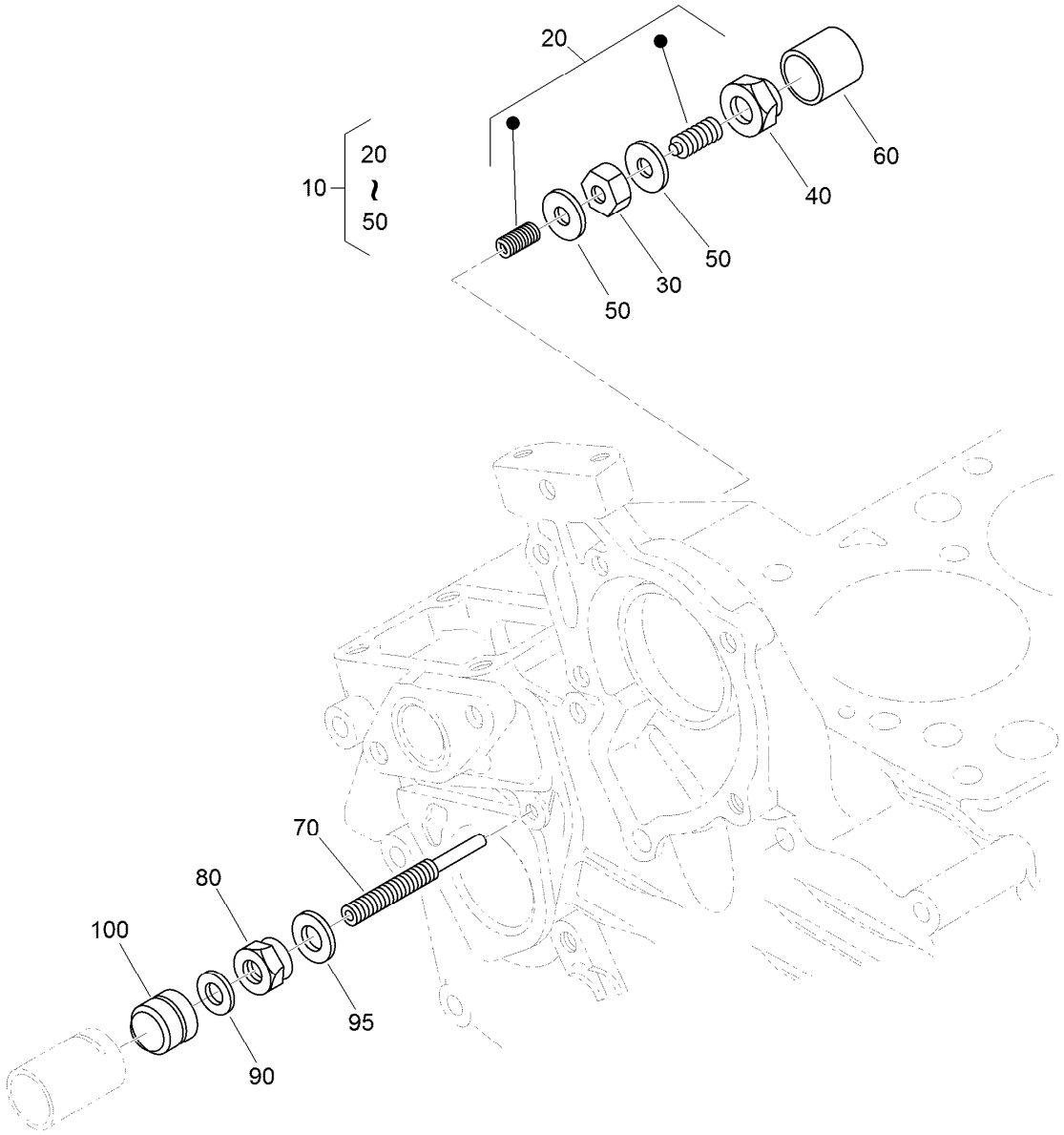

Idle Apparatus Assembly

Ref.	*Part Number*	*Qty.*	*Description*
10	100-1898	1	Idle Apparatus ASM
20	100-1899	1	Adjusting Bolt ASM
30	100-1846	1	Nut
40	100-1901	1	Nut-Cap
50	98-7428	2	Gasket
60	100-1902	1	Cap
70	110-3758	1	Bolt-Adjusting
80	100-2175	1	Nut-Lock
90	98-7654	1	Gasket
95	107-9081	1	Gasket
100	99-8387	1	Nut-Cap

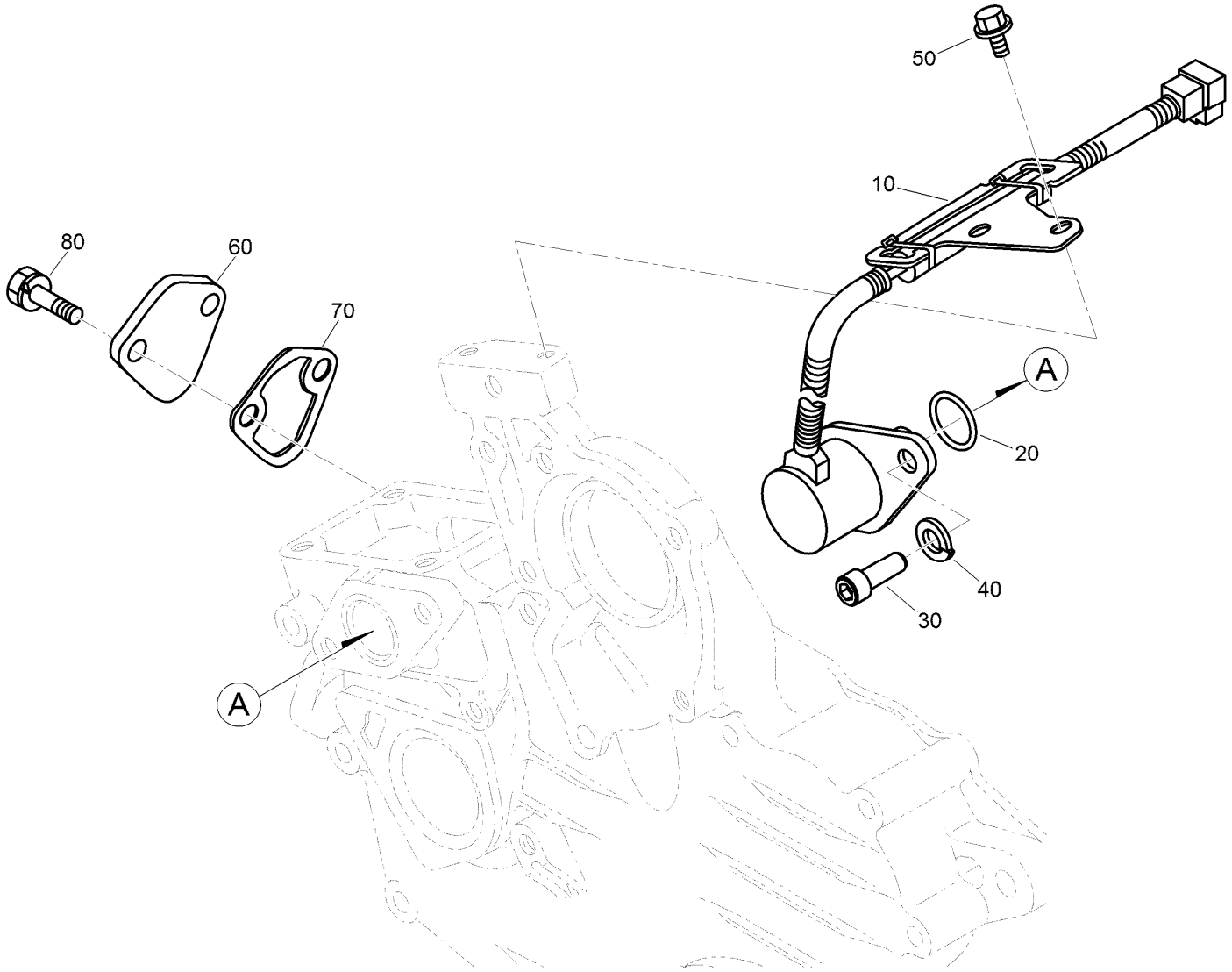

Stop Solenoid and Fuel Pump Cover Assembly

Ref.	*Part Number*	*Qty.*	*Description*
10	117-2719	1	Solenoid Stop ASM
20	110-3762	1	O-Ring
30	110-3763	2	Bolt-HSH
40	98-7699	2	Washer-Spring
50	100-1774	2	Bolt-Flange
60	99-3514	1	Cover
70	98-9636	1	Gasket-Pump, Fuel
80	98-7692	2	Bolt

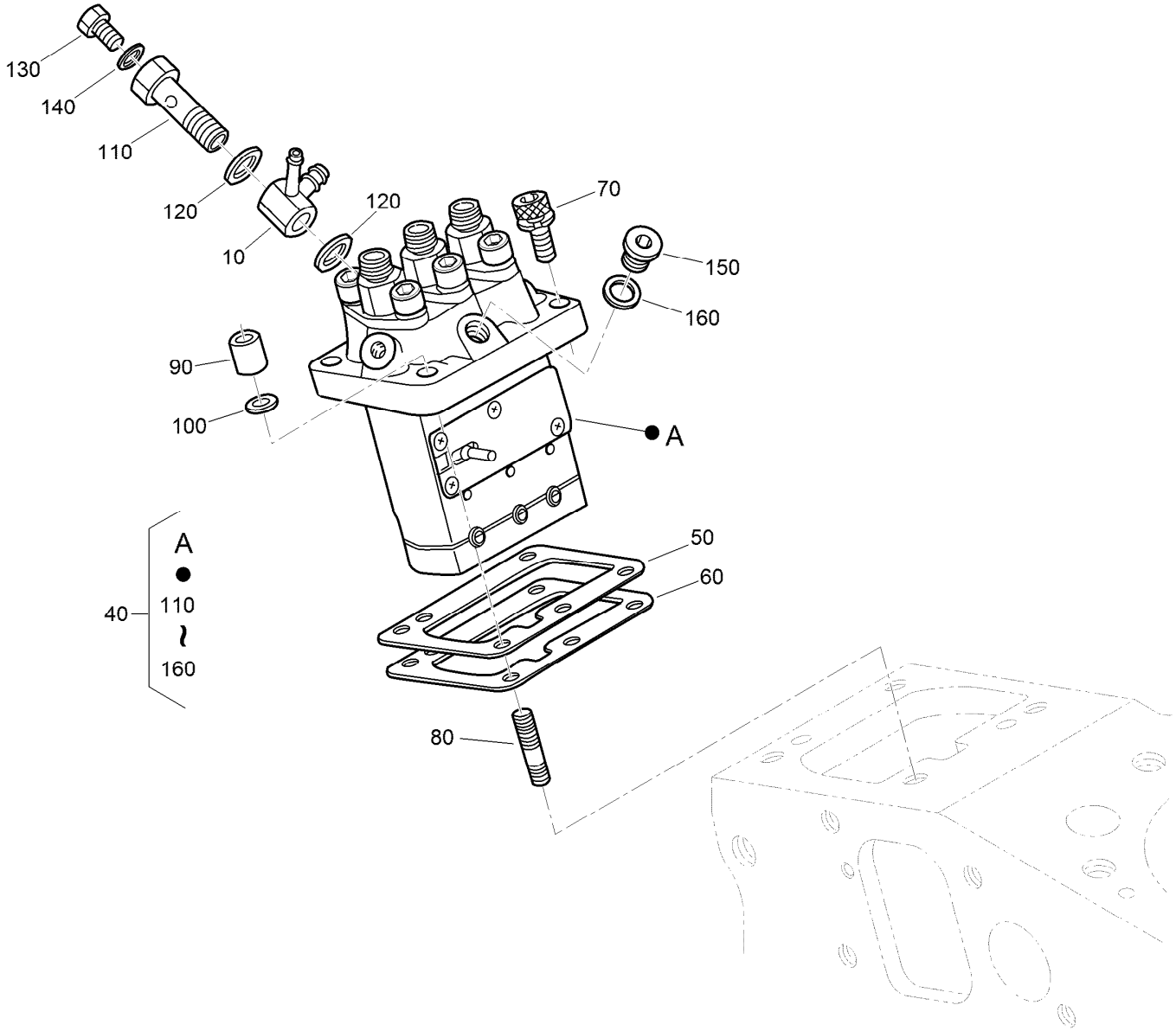

Injection Pump Assembly

Ref.	Part Number	Qty.	Description
10	110-3764	1	Joint
40	110-3765	1	Injection Pump ASM
50	115-3045	1	Shim-Injection (0.175Mm)
50	98-9456	1	Shim-Injection (0.20Mm)
50	98-9457	1	Shim-Injection (0.25Mm)
60	98-9458	1	Shim-Injection (0.30Mm)
60	115-3046	1	Shim-Injection (0.35Mm)
70	117-7564	2	Bolt-Hex Soc HD
80	98-9438	2	Stud

Ref.	Part Number	Qty.	Description
90	98-9440	2	Nut-Cap
100	98-7699	2	Washer-Spring
110	100-1896	1	Screw-Hollow
120	98-9445	2	Gasket
130	98-9430	1	Screw
140	98-9446	1	Gasket
150	98-9466	1	Plug
160	98-9451	1	Gasket

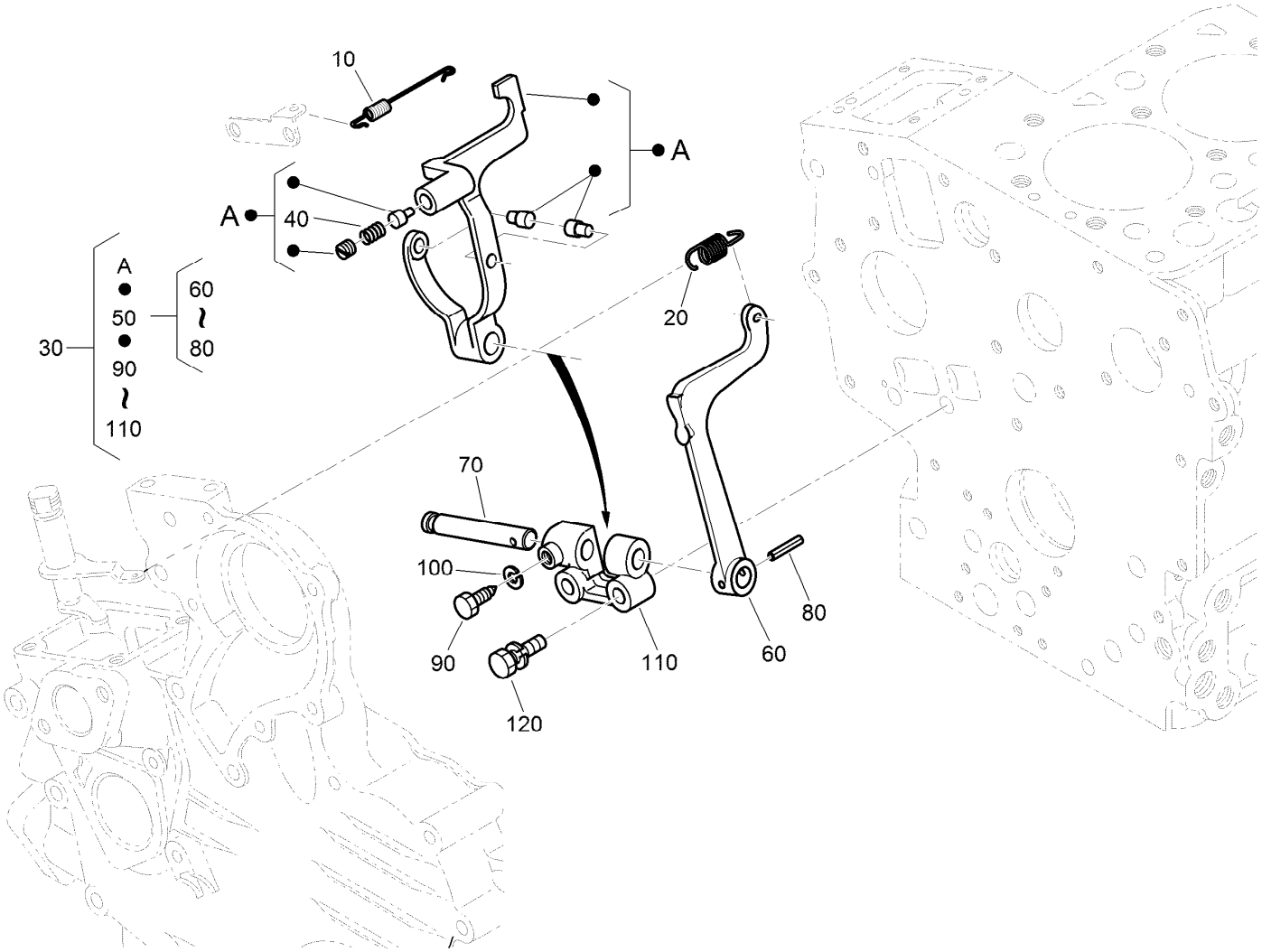

Governor Assembly

Ref.	Part Number	Qty.	Description
10	110-3766	1	Spring-Start
20	110-3767	1	Spring-Governor
30	112-8337	1	Fork Lever ASM
40	117-0313	1	Spring
50	100-1905	1	Fork Lever ASM
60	100-1907	1	Lever-Fork
70	100-1908	1	Shaft-Lever, Fork
80	100-1751	1	Pin-Spring
90	100-1845	1	Bolt
100	127-0408	1	Washer-Lock, Spring
110	100-1909	1	Holder-Lever, Fork
120	100-1763	2	Bolt

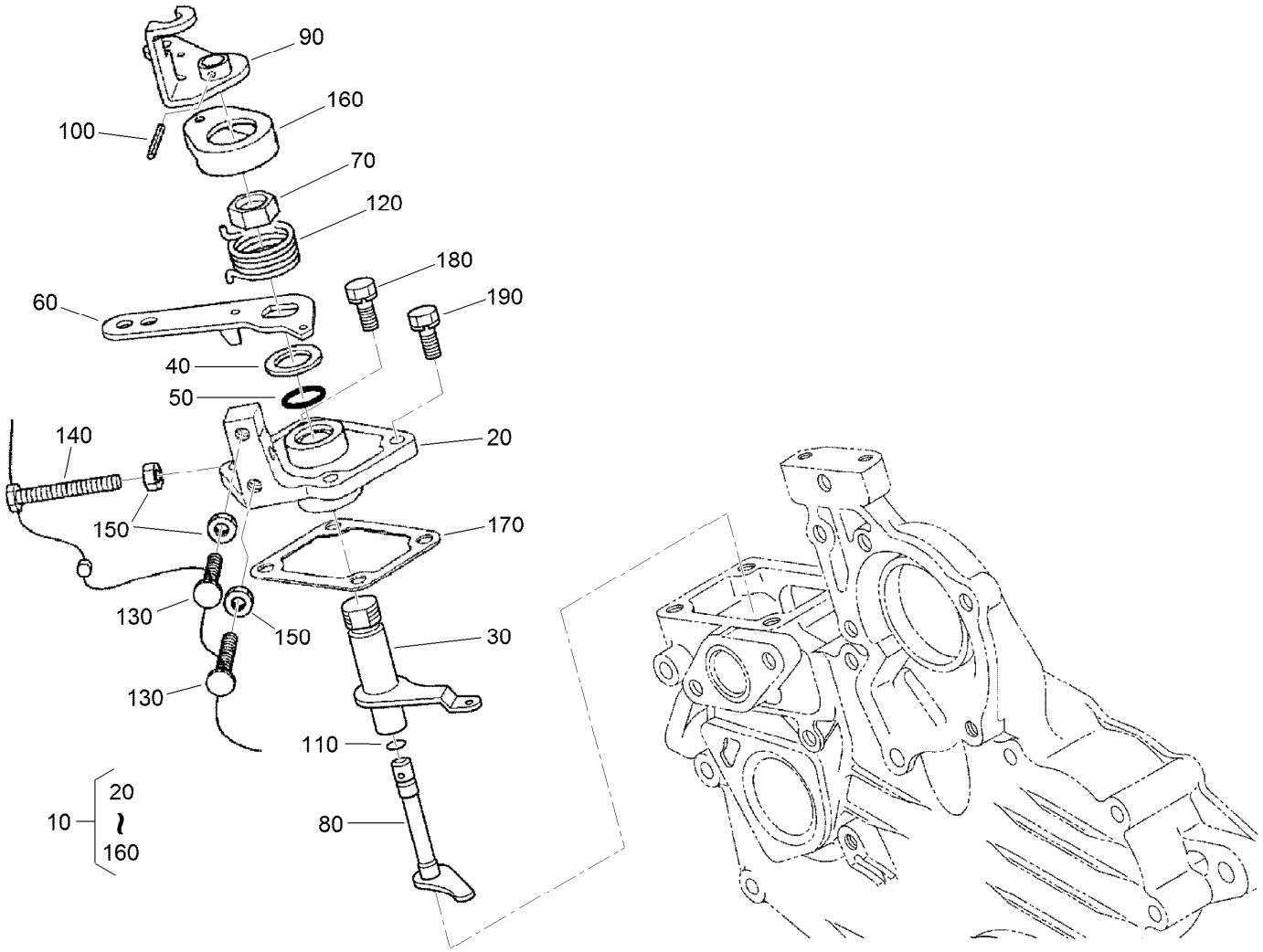

Speed Control Plate Assembly

Ref.	Part Number	Qty.	Description
10	110-3769	1	Speed Control Plate ASM
20	110-3770	1	Plate-Control, Speed
30	110-3771	1	Lever-Governor
40	110-3772	1	Collar
50	100-2208	1	O-Ring
60	110-3773	1	Lever-Control, Speed
70	110-3774	1	Nut-Control, Speed
80	110-3775	1	Shaft-Lever
90	110-3776	1	Lever-Stop, Engine
100	110-3777	1	Pin-Spring

Ref.	Part Number	Qty.	Description
110	100-2207	1	O-Ring
120	110-3778	1	Spring-Return
130	120-3133	2	Screw-Stopper
140	120-3134	1	Bolt
150	98-7572	3	Nut
160	110-3779	1	Cap
170	100-1962	1	Gasket-Plate, Control
180	127-0403	2	Bolt-Flange
190	112-2507	2	Bolt

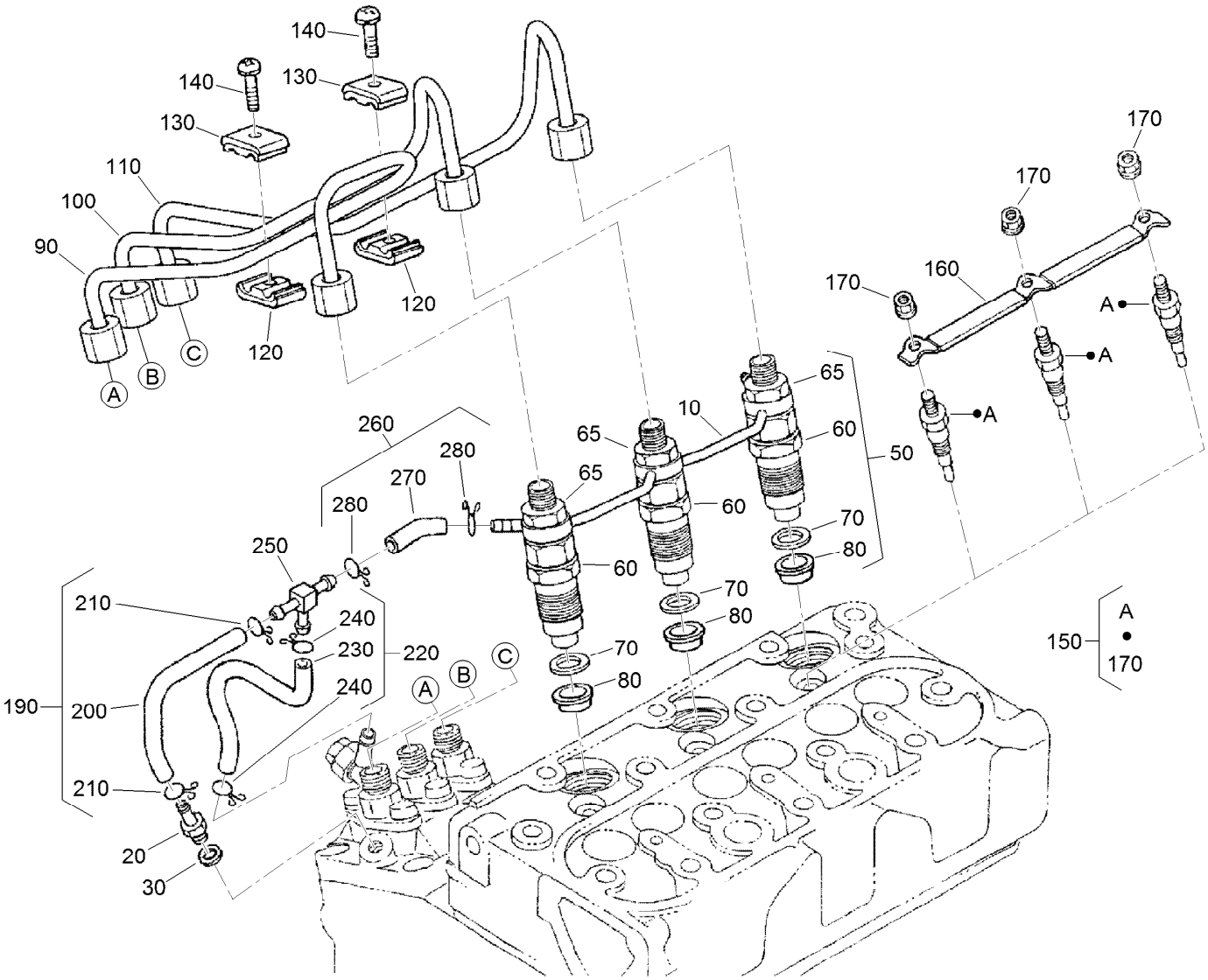

Nozzle Holder and Glow Plug Assembly

Ref.	Part Number	Qty.	Description
10	110-3780	1	Over Flow Pipe ASM
20	98-9431	1	Screw-Bleeder, Air
30	98-7654	1	Gasket
50	130-1305	3	Nozzle Holder Kit
60	130-1303	3	Nozzle Holder ASM
65	121-2411	3	Nut
70	98-7676	3	Gasket
80	98-7677	3	Seal-Heat
90	130-1522	1	Pipe-Injection
100	130-1523	1	Pipe-Injection
110	130-1541	1	Pipe-Injection
120	98-7682	2	Clamp-Pipe
130	98-7683	2	Clamp-Pipe
140	98-7684	2	Screw (W/Washer)

Ref.	Part Number	Qty.	Description
150	130-1411	3	Plug-Glow
160	110-3784	1	Cord-Plug, Glow
170	99-8377	3	Nut-Flange
190	110-3785	1	Fuel Tube ASM
200	110-3786	1	Tube-Fuel
210	98-7671	2	Clip-Pipe
220	110-3787	1	Fuel Tube ASM
230	110-3788	1	Tube-Fuel
240	98-7671	2	Clip-Pipe
250	112-8338	1	Pipe-Joint, T
260	110-3790	1	Fuel Tube ASM
270	110-3791	1	Tube-Fuel
280	98-7671	2	Clip-Pipe

Nozzle Holder Assembly

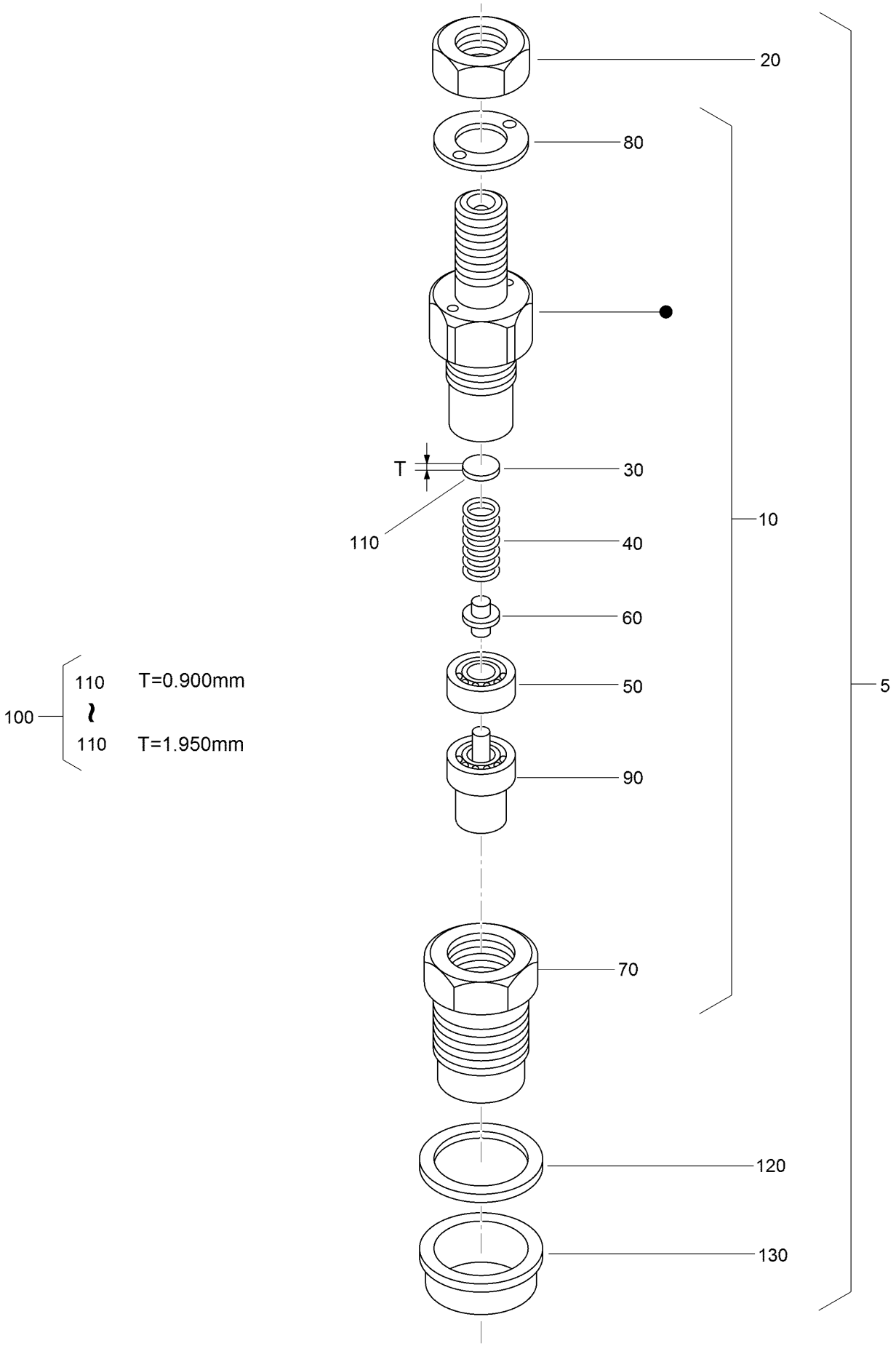

Nozzle Holder Assembly (continued)

Ref.	Part Number	Qty.	Description
5	130-1305	3	Nozzle Holder Kit
10	130-1303	3	Nozzle Holder ASM
20	121-2411	3	Nut
30	99-8302	3	Washer-Adjusting
40	99-8303	3	Spring-Nozzle
50	99-8304	3	Spacer-Distance
60	99-8305	3	Rod-Push
70	130-1304	3	Nut-Nozzle
80	99-8307	3	Washer-Plain
90	130-1497	3	Nozzle-Piece
100	98-9448	3	Adjusting Washer ASM
110	98-7642	3	Washer-Adjusting (0.900Mm)
110	98-7841	3	Washer-Adjusting (0.925Mm)
110	98-7842	3	Washer-Adjusting (0.950Mm)
110	98-7843	3	Washer-Adjusting (0.975Mm)
110	98-7844	3	Washer-Adjusting (1.000Mm)
110	98-7845	3	Washer-Adjusting (1.025Mm)
110	98-7846	3	Washer-Adjusting (1.050Mm)
110	98-7847	3	Washer-Adjusting (1.075Mm)
110	98-7848	3	Washer-Adjusting (1.100Mm)
110	98-7849	3	Washer-Adjusting (1.125Mm)
110	98-7850	3	Washer-Adjusting (1.150Mm)
110	98-7852	3	Washer-Adjusting (1.200Mm)
110	98-7853	3	Washer-Adjusting (1.225Mm)
110	98-7854	3	Washer-Adjusting (1.250Mm)
110	98-7855	3	Washer-Adjusting (1.275Mm)
110	98-7856	3	Washer-Adjusting 1.300Mm)
110	98-7857	3	Washer-Adjusting (1.325Mm)
110	98-7858	3	Washer-Adjusting (1.350Mm)
110	98-7859	3	Washer-Adjusting (1.375Mm)
110	98-7860	3	Washer-Adjusting (1.400Mm)
110	98-7861	3	Washer-Adjusting (1.425Mm)
110	98-7862	3	Washer-Adjusting (1.450Mm)
110	98-7863	3	Washer-Adjusting (1.475Mm)
110	98-7864	3	Washer-Adjusting (1.500Mm)
110	98-7865	3	Washer-Adjusting (1.525Mm)
110	98-7866	3	Washer-Adjusting (1.550Mm)
110	98-7867	3	Washer-Adjusting (1.575Mm)
110	98-7868	3	Washer-Adjusting (1.600Mm)
110	98-7869	3	Washer-Adjusting (1.625Mm)
110	98-7870	3	Washer-Adjusting (1.650Mm)
110	98-7871	3	Washer-Adjusting (1.675Mm)
110	98-7872	3	Washer-Adjusting (1.700Mm)
110	98-7873	3	Washer-Adjusting (1.725Mm)
110	98-7874	3	Washer-Adjusting (1.750Mm)
110	98-7875	3	Washer-Adjusting (1.775Mm)
110	98-7876	3	Washer-Adjusting (1.800Mm)
110	98-7877	3	Washer-Adjusting (1.825Mm)
110	98-7878	3	Washer-Adjusting (1.850Mm)
110	98-7879	3	Washer-Adjusting (1.875Mm)
110	98-7880	3	Washer-Adjusting (1.900Mm)
110	98-7881	3	Washer-Adjusting (1.925Mm)
110	98-7882	3	Washer-Adjusting (1.950Mm)
120	98-7676	3	Gasket
130	98-7677	3	Seal-Heat

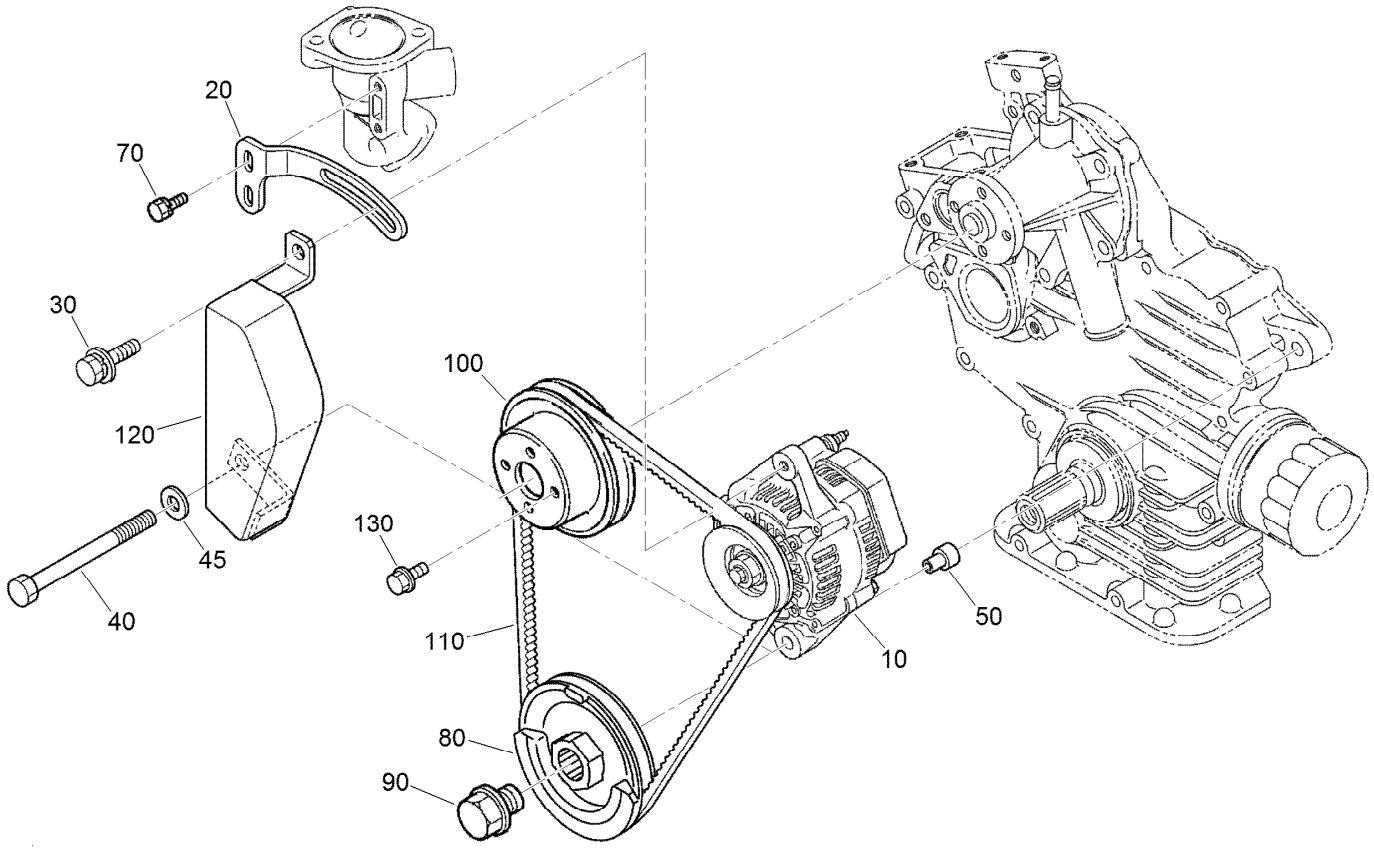

Alternator and Pulley Assembly

Ref.	*Part Number*	*Qty.*	*Description*
10	117-5541	1	60 Amp Alternator ASM
20	117-0314	1	Stay-Alternator
30	121-3800	1	Bolt-Sems
40	110-3793	1	Bolt
45	120-5832	1	Washer-Plain
50	110-3794	1	Collar
70	98-7605	2	Bolt
80	112-8339	1	Pulley-Drive, Fan
90	100-1978	1	Bolt
100	100-1921	1	Pulley-Fan
110	110-3796	1	Belt-V
120	117-0315	1	Cover-Alternator
130	99-8363	4	Bolt-Flange

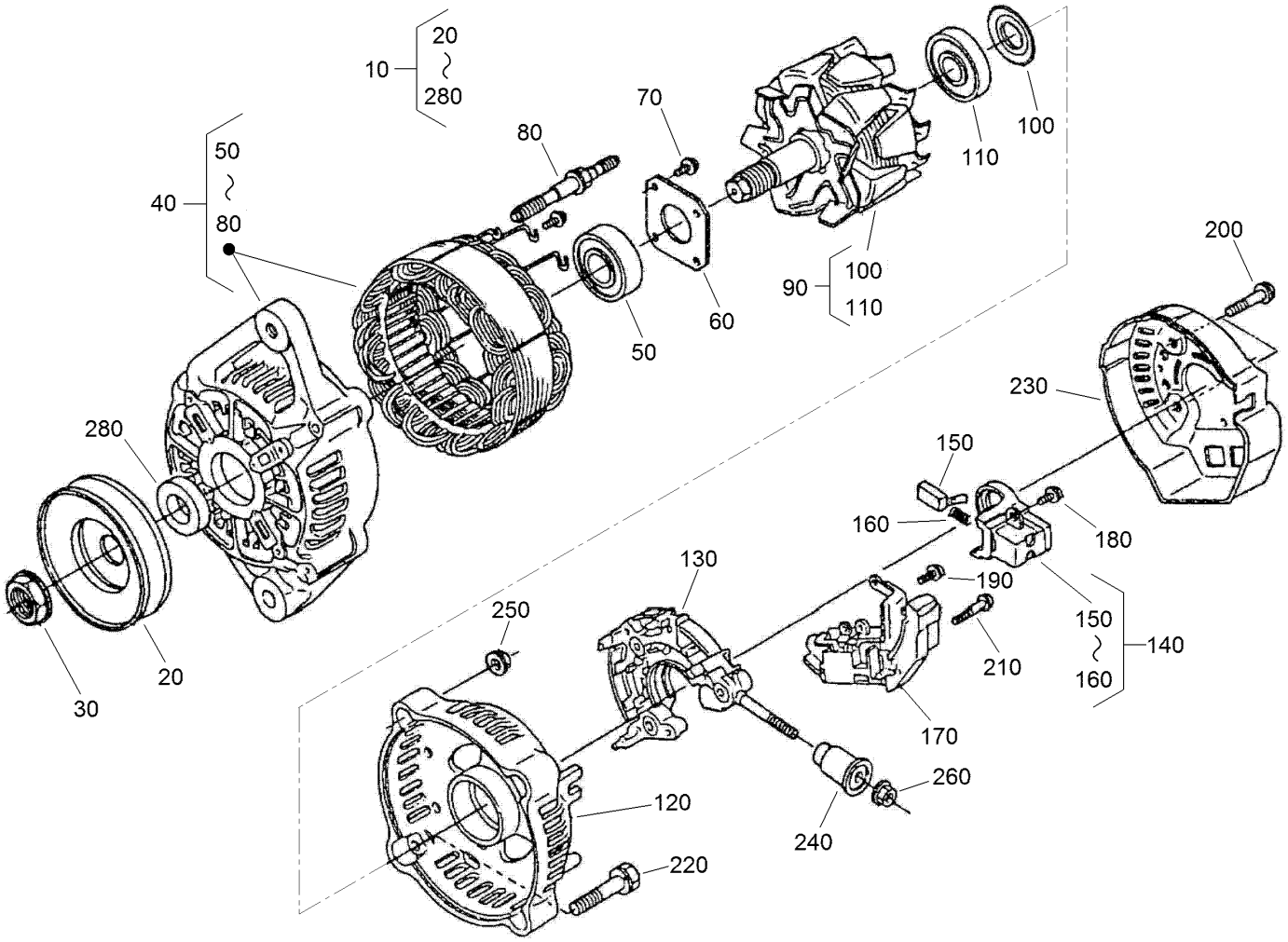

Alternator Components Assembly

Ref.	Part Number	Qty.	Description
10	117-5541	1	60 Amp Alternator ASM
20	98-9453	1	Pulley-Dynamo
30	98-7708	1	Nut
40	117-0316	1	Drive End Frame ASM
50	133-2811	1	Bearing
60	98-7715	1	Plate-Retainer
70	98-7716	4	Screw-Head, Round
80	98-7717	2	Bolt-Through
90	117-0317	1	Rotor ASM
100	98-7711	1	Cover-Bearing
110	107-0138	1	Bearing-Ball
120	133-2813	1	Frame-End
130	117-0322	1	Holder
140	107-0141	1	Brush Holder ASM

Ref.	Part Number	Qty.	Description
150	98-7724	2	Brush
160	98-7725	2	Spring-Brush
170	117-0319	1	Regulator ASM
180	98-7727	6	Screw-Head, Round
190	98-7728	1	Screw-Head, Round
200	98-7729	3	Bolt
210	98-7726	2	Screw-Head, Round
220	98-7731	2	Bolt
230	117-0320	1	Cover-End
240	117-0321	1	Insulation-Brush
250	98-7730	2	Nut
260	98-7732	1	Nut
280	98-7709	1	Collar

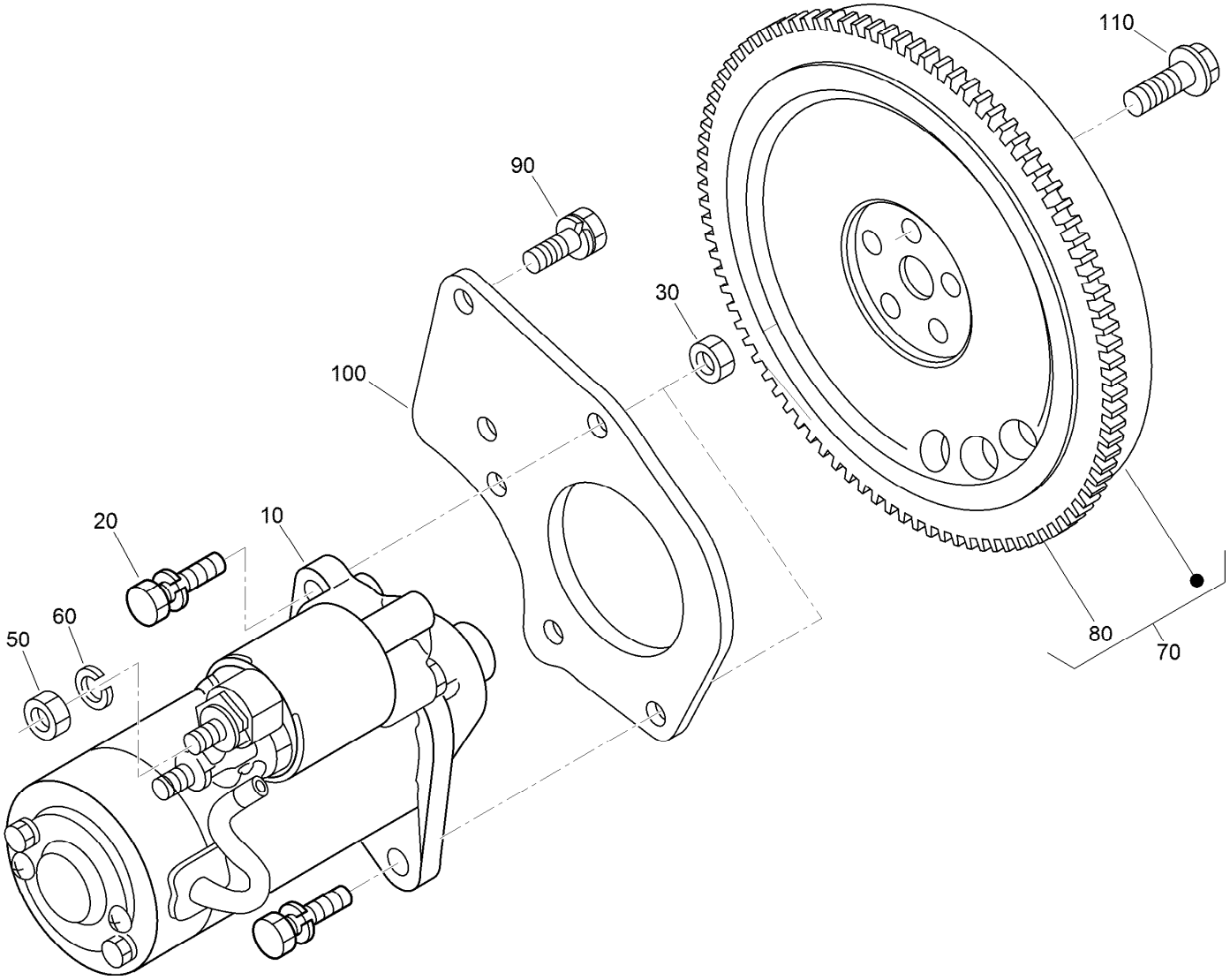

Starter and Flywheel Assembly

Ref.	*Part Number*	*Qty.*	*Description*
10	110-3800	1	Starter ASM
20	98-7697	2	Bolt
30	98-7534	2	Nut
50	98-7534	1	Nut
60	105-2893	1	Washer-Spring
70	130-1496	1	Flywheel ASM
80	127-1604	1	Gear-Ring
90	100-1930	5	Bolt-Flywheel
100	117-0323	1	Plate-End, Rear
110	110-3754	3	Bolt

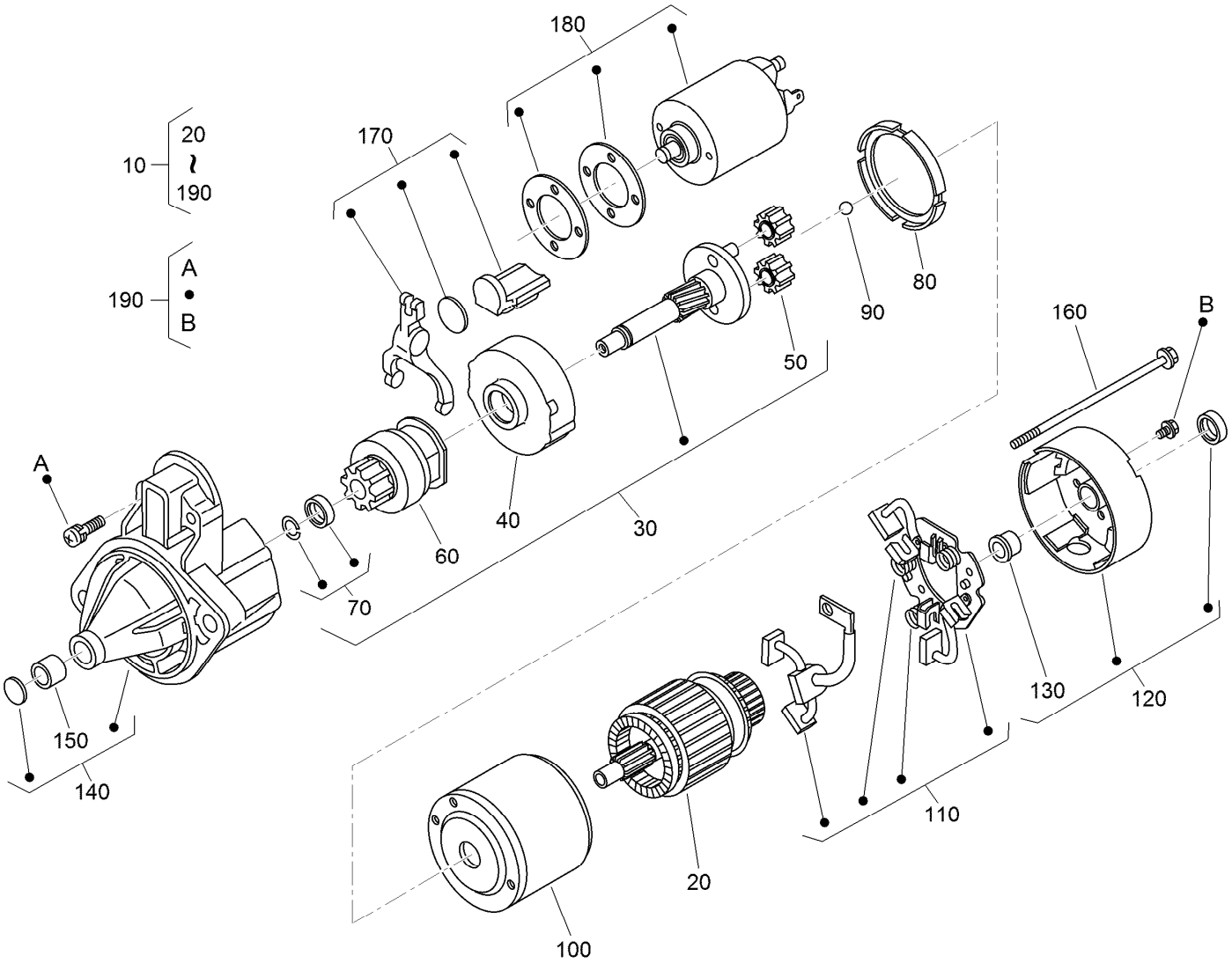

Starter Component Assembly

Ref.	Part Number	Qty.	Description
10	110-3800	1	Starter ASM
20	110-3801	1	Armature
30	110-3802	1	Shaft ASM
40	120-3142	1	Gear-Internal
50	110-3804	3	Gear-Planetary
60	110-3805	1	Clutch-Running, Over
70	110-3806	1	Stopper
80	120-3143	1	Gasket
90	110-3808	1	Ball
100	130-1295	1	Yoke

Ref.	Part Number	Qty.	Description
110	110-3810	1	Brush Holder ASM
120	110-3811	1	Rear Bracket ASM
130	110-3812	1	Bushing
140	110-3813	1	Front Bracket ASM
150	110-3814	1	Bushing
160	110-3815	2	Bolt
170	110-3816	1	Fork Lever ASM
180	125-9099	1	Switch-Magnetic
190	110-3818	1	Screws (Set Of 4)

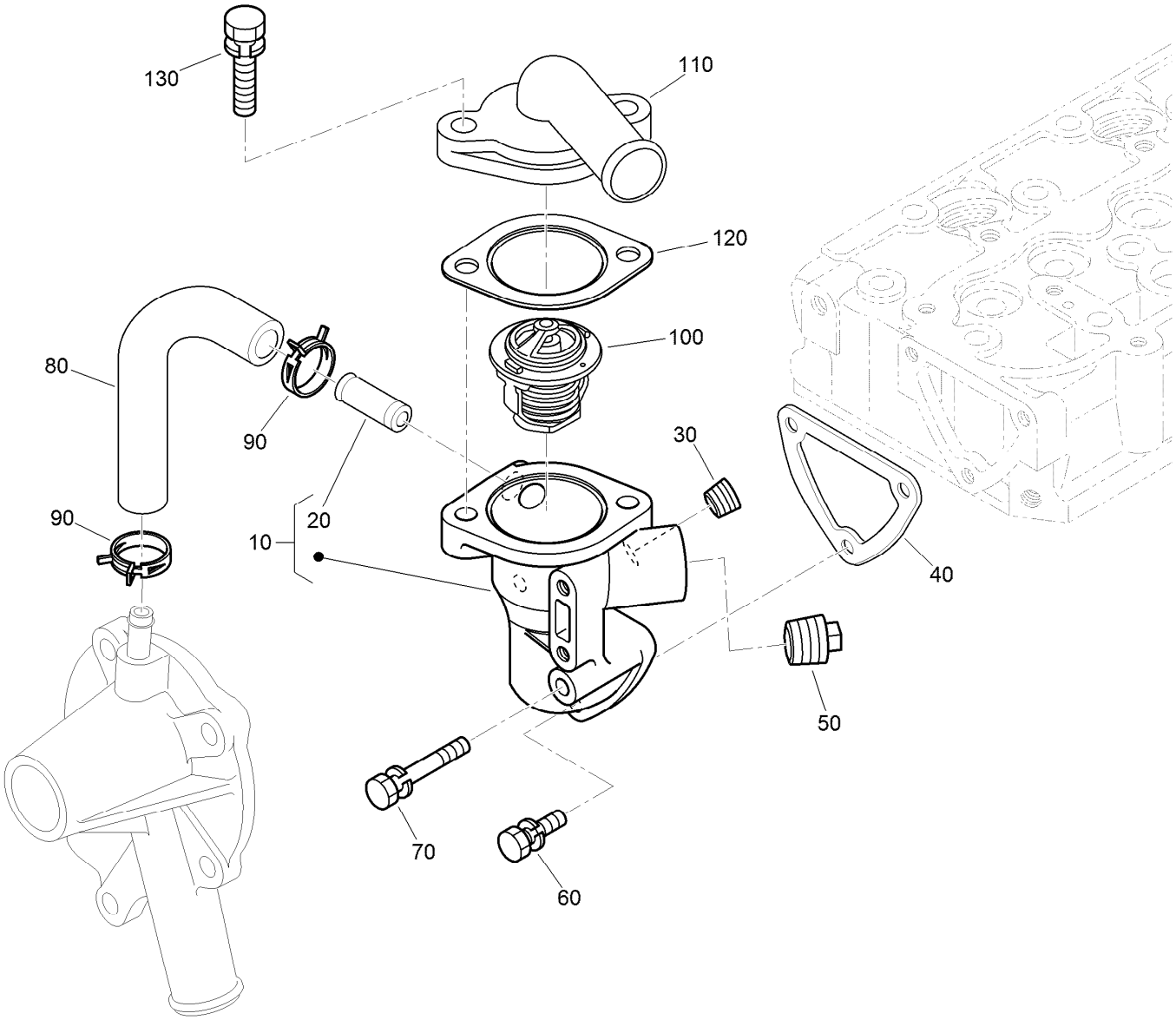

Water Flange and Thermostat Assembly

Ref.	Part Number	Qty.	Description
10	110-3819	1	Water Flange ASM
20	98-9580	1	Pipe-Return, Water
30	98-9444	1	Plug
40	110-3820	1	Gasket-Flange, Water
50	110-3821	1	Plug
60	98-7692	2	Bolt
70	125-9063	1	Bolt-Sems
80	110-3822	1	Pipe-Return, Water
90	125-9078	2	Clamp-Hose
100	98-7778	1	Thermostat ASM
110	110-3823	1	Cover-Thermostat
120	105-3748	1	Gasket-Thermostat
130	98-7777	2	Bolt

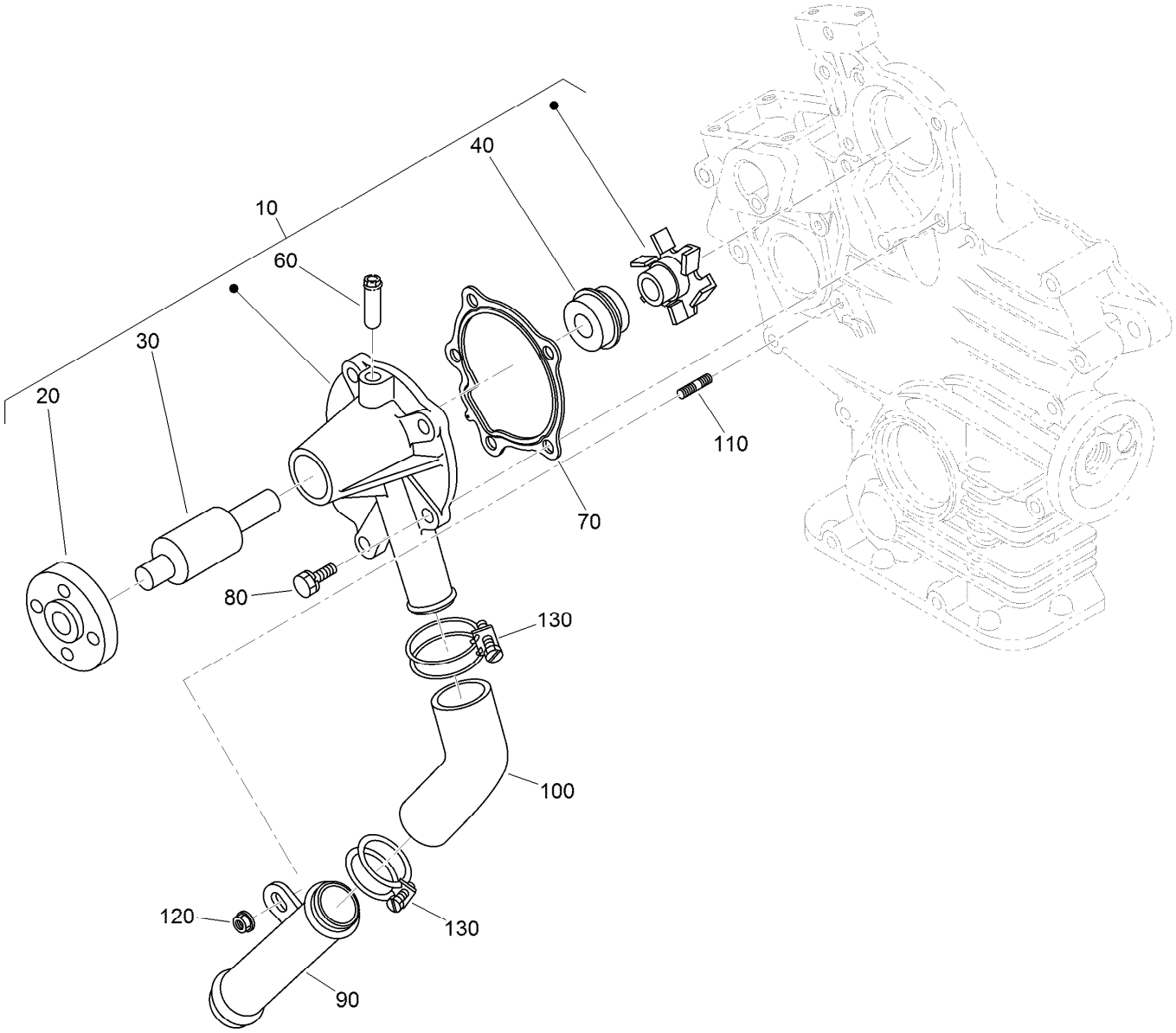

Water Pump and Water Pipe Assembly

Ref.	Part Number	Qty.	Description
10	110-3824	1	Water Pump ASM
20	125-9081	1	Flange-Pump, Water
30	100-1934	1	Bearing-Ball
40	99-3518	1	Water Pump Seal ASM
60	100-1932	1	Pipe-Return, Water
70	117-0330	1	Gasket-Pump, Water
80	100-1750	4	Bolt
90	100-1918	1	Pipe-Water
100	110-3827	1	Pipe-Water
110	100-1924	1	Stud
120	100-2203	1	Nut-Flange
130	110-3828	2	Band-Pipe

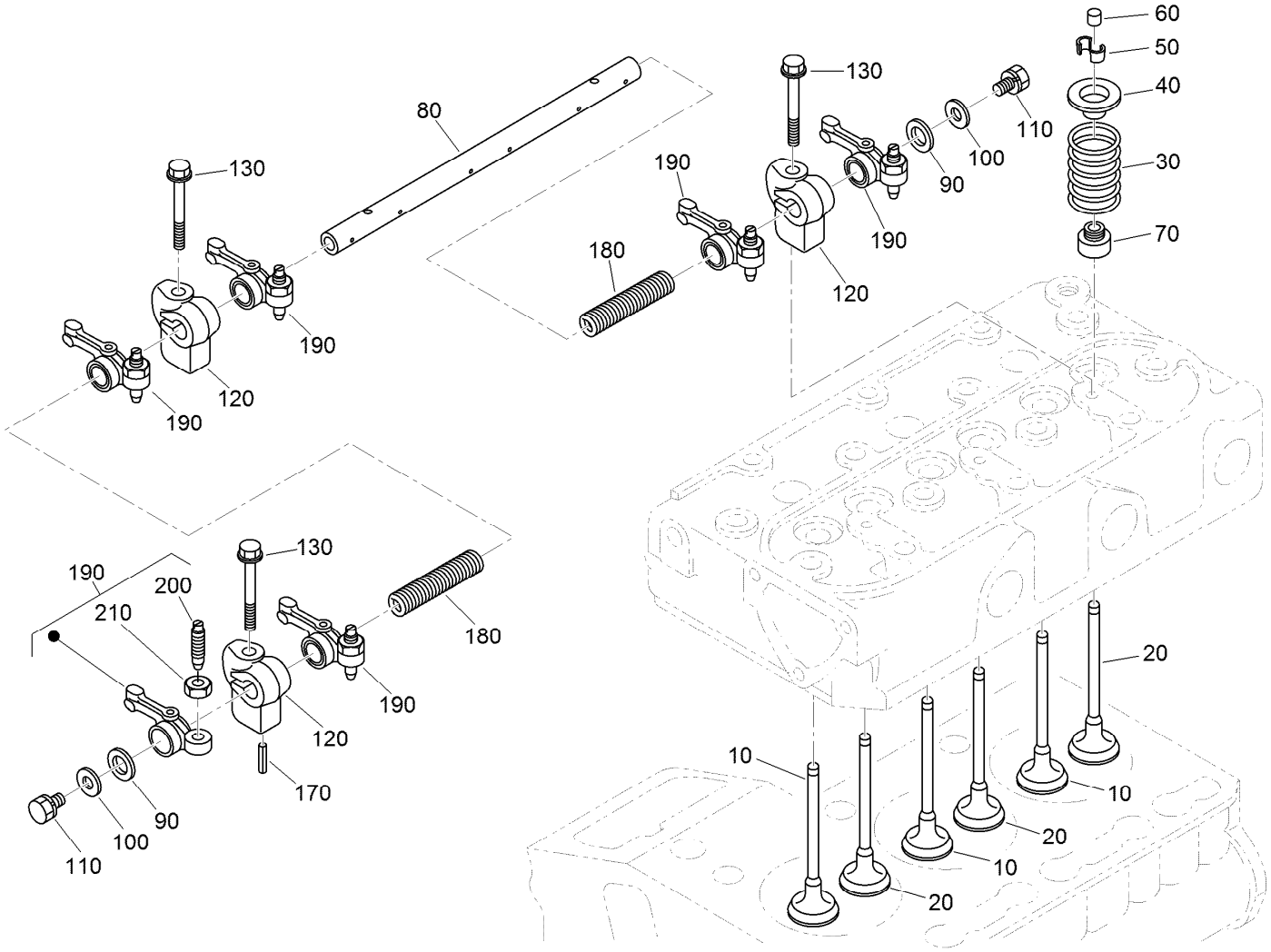

Valve and Rocker Arm Assembly

Ref.	Part Number	Qty.	Description
10	112-2514	3	Valve-Inlet
20	112-2515	3	Valve-Exhaust
30	100-1823	6	Spring-Valve
40	100-1825	6	Retainer-Spring, Valve
50	120-3136	6	Collet-Spring, Valve
60	100-2155	6	Cap-Valve
70	100-1797	6	Seal-Stem, Valve
80	112-8341	1	Shaft-Arm, Rocker
90	100-2044	2	Washer

Ref.	Part Number	Qty.	Description
100	110-3832	2	Washer-Plain
110	100-1762	2	Bolt
120	110-3833	3	Bracket-Arm, Rocker
130	110-3834	3	Bolt-Flange
170	98-7602	1	Pin-Spring
180	112-8342	2	Spring
190	100-1884	6	Rocker Arm ASM
200	100-1885	6	Screw-Adjusting
210	100-1827	6	Nut

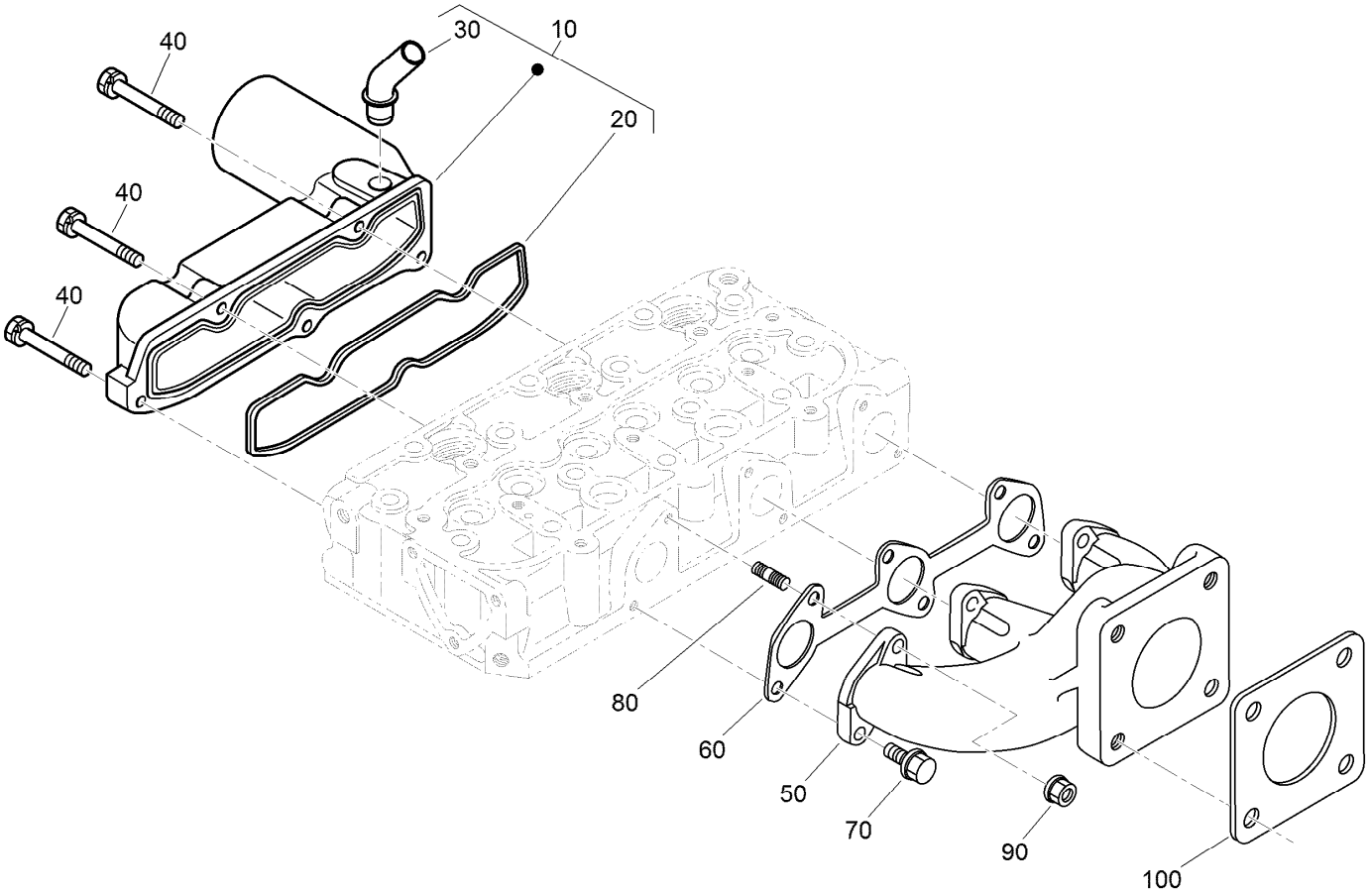

Inlet and Exhaust Manifold Assembly

Ref.	*Part Number*	*Qty.*	*Description*
10	120-3141	1	Intake Manifold ASM
20	110-3838	1	Gasket-Manifold, Intake
30	121-2417	1	Pipe-Breather
40	98-9352	5	Bolt
50	110-3839	1	Manifold-Exhaust
60	110-3840	1	Gasket-Manifold, Exhaust
70	130-1154	3	Screw-Hex HD
80	130-1156	3	Bolt-Stud
90	100-1778	3	Nut
100	99-8343	1	Gasket-Muffler

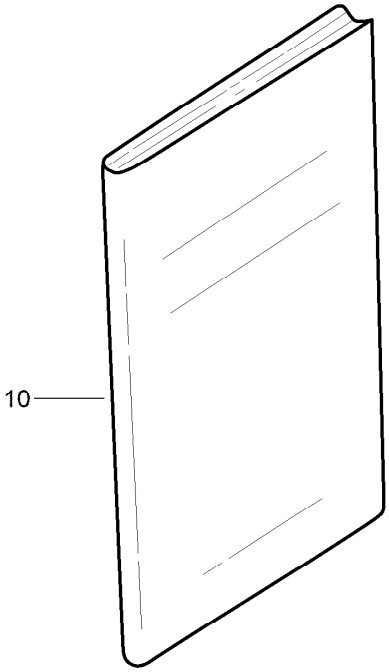

Miscellaneous Engine Parts

Ref.	*Part Number*	*Qty.*	*Description*
10	130-1513	1	Manual-Operator

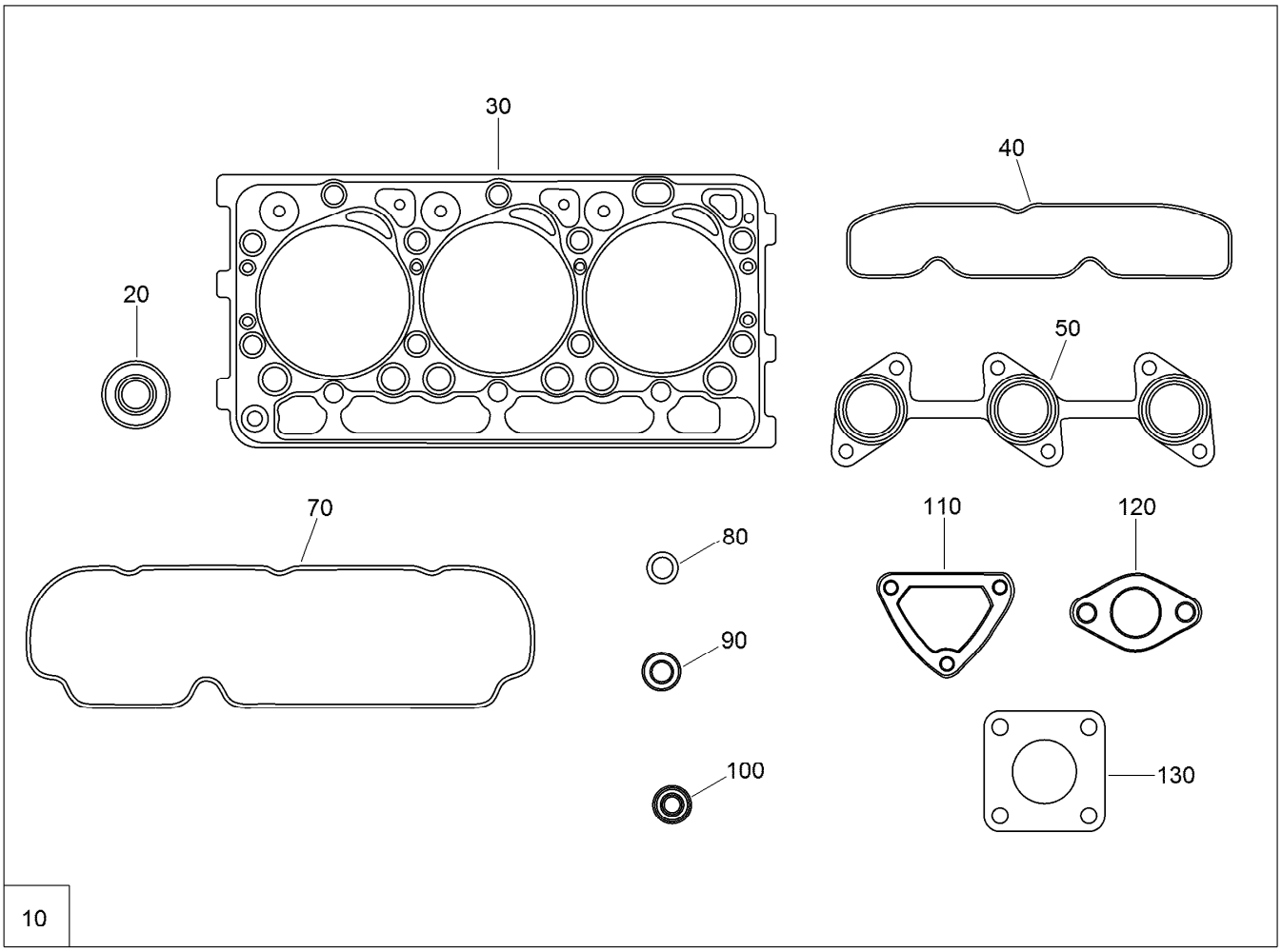

Upper Engine Gasket Kit

Ref.	*Part Number*	*Qty.*	*Description*
10	112-2518	1	Upper Gasket Kit
20	100-1797	6	Seal-Stem, Valve
30	112-2520	1	Gasket-Head, Cylinder
40	110-3838	1	Gasket-Manifold, Intake
50	110-3840	1	Gasket-Manifold, Exhaust
70	112-2521	1	Gasket-Cover, Head
80	99-3446	1	O-Ring
90	98-7676	3	Gasket
100	98-7677	3	Seal-Heat
110	110-3820	1	Gasket-Flange, Water
120	105-3748	1	Gasket-Thermostat
130	99-8343	1	Gasket-Muffler

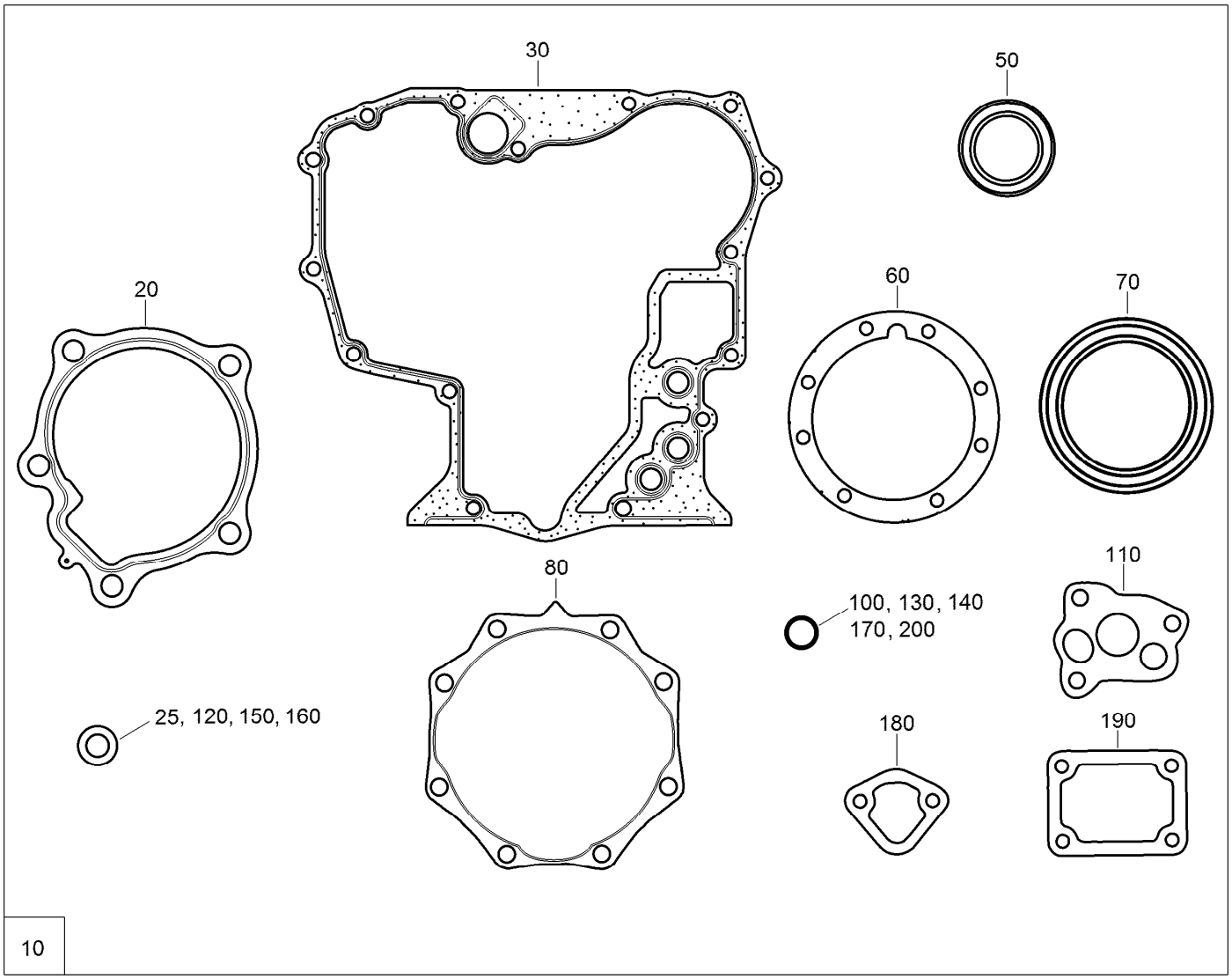

Lower Engine Gasket Kit

Ref.	Part Number	Qty.	Description
10	130-1388	1	Lower Gasket Kit
20	117-0330	1	Gasket-Pump, Water
25	98-7524	1	Gasket
30	117-0327	1	Gasket-Case, Gear
50	120-7852	1	Seal-Oil
60	112-2812	1	Gasket-Case, Bearing
70	110-3724	1	Seal-Oil
80	100-1876	1	Gasket-Cover, Case
100	100-2209	1	O-Ring
110	100-2003	1	Gasket-Pump, Oil

Ref.	Part Number	Qty.	Description
120	98-7654	1	Gasket
130	105-3776	1	O-Ring
140	100-2207	1	O-Ring
150	98-7654	2	Gasket
160	110-9715	1	Gasket-Pan, Oil
170	100-2208	1	O-Ring
180	98-9636	1	Gasket-Pump, Fuel
190	100-1962	1	Gasket-Plate, Control
200	110-3762	1	O-Ring

Attachments and Accessories

For 74274 Z Master Professional 7000 Series Riding Mower With 72in TURBO FORCE Side Discharge Mower

Product Name	Model/Part
Seat Cover W/arm rest	117-0095
Hypr-Oil 500 (quart)	114-4713
Hypr-Oil 500 (gallon)	114-4714
Hypr-Oil 500-5 (5 gallon)	114-4715
Deluxe Suspension Seat Kit	78530
Recycler Kit	107-1612
Blade-Hi Flow, 24.5in	105-7784-03
Blade-Mid Flow, 24.5in	105-7711-03
Blade-Lo Flow, 24.5in	105-7712-03
Blade-Atomic, 24.5in	105-7719-03
Blade-Recyler, 24.5in	105-7778-03
6 Pack Blade, 24.5in Hi-Flow	108-1120
Light Kit	107-9880
6 Pack-Blade, 24.5in Mid-Flow	110-0404
6 Pack-Blade, 24.5in Lo-Flow	110-0410
6 Pack Blade, 24.5in Atomic	108-1126
Chute Gate Kit	78522
6 Pack-Blade, 24.5in Recycler	110-0411
Striping Kit	107-1630
Roller Striping Kit	108-2162
Z Stand Kit	105-1622
Filter Minder Gauge	99-4664
Hitch Kit	99-8925
Turbo Baffle Kit	107-1634
Blower and Drive Kit	78539
Bimini Folding Shade Assembly	115-4510
Deck Triple Bag Assembly	78535
DFS E-Z Vac Bagger	78545
1.25in Spark Arrester Kit	105-1672
MVP Belt and Blade Kit	127-1643

Notes:

Notes:

TORO®

Count on it.