Form No. 3417-887 Rev A

High Height-of-Cut Kit

Reelmaster® 3000 or 5000 Series DPA Cutting Unit

Model No. 137-0890

Installation Instructions

⚠ WARNING

CALIFORNIA
Proposition 65 Warning

This product contains a chemical or chemicals known to the State of California to cause cancer, birth defects, or reproductive harm.

Installation

Loose Parts

Use the chart below to verify that all parts have been shipped.

Description	Qty.	Use
No parts required	–	Prepare to install the kit.
No parts required	–	Removing the height-of-cut brackets.
Bolt (5/16 x 1-1/8 inches) Serrated-flange nut (5/16 inch) High height of cut bracket (left) High height of cut bracket (right) Height-of-cut screw (3/8 x 2-3/4 inches) Washer (5/16 inch) Flange locknut (5/16)	2 2 1 1 2 4 2	Assemble the height-of-cut brackets.
Locknut (3/8 inch)	2	Install the front roller.
Carriage bolts(5/16 x 4 inches) Shim (0.25 inch) Flange locknut (5/16 inch)	4 8 4	Install the rear roller shims.
No parts required	–	Finish installing the height —of-cut kit installation.

Preparing to Install the Kit

Machines with the Cutting Units Installed

1. Park the machine on a level surface and lower the cutting units.
2. Engage the parking brake, shut off the engine, and remove the key.
3. Remove the cutting units; refer to the cutting unit *Operator's Manual*.

Removing the Height-of-Cut Brackets

1. Loosen the 2 flange locknuts at the 2 height-of-cut screws (Figure 1).

© 2017—The Toro® Company
8111 Lyndale Avenue South
Bloomington, MN 55420

Register at www.Toro.com.

CE

Original Instructions (EN)
Printed in the USA.
All Rights Reserved

3417-887 A

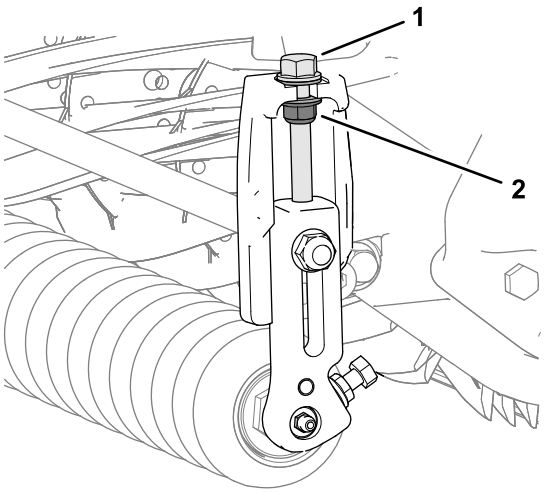

g235009

Figure 1

1. Height-of-cut screw
2. Flange locknut

2. Loosen the 2 serrated-flange nuts and 2 bolts that secure the front roller shaft to the roller support end of the left and right height-of-cut brackets (Figure 2).

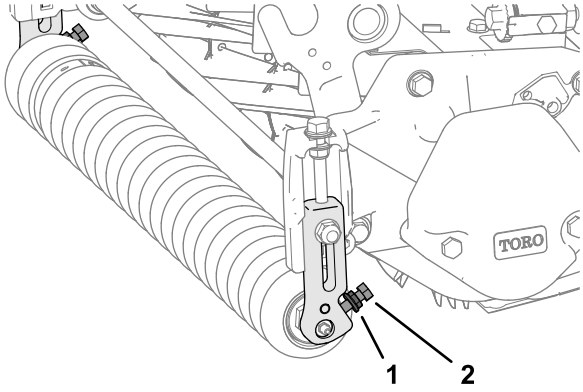

g234979

Figure 2

1. Serrated-flange nut
2. Bolt

3. Working at 1 side of the cutting unit, remove the carriage bolt and flange locknut that secure the height-of-cut bracket to the side plate (Figure 3).

   Note: Retain the carriage bolt for installation in Installing the Front Roller (page 3).

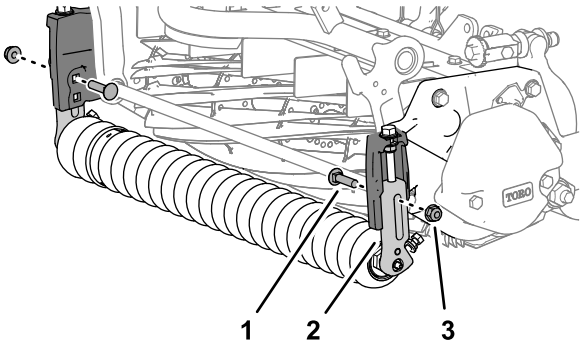

g234981

Figure 3

1. Carriage bolt
2. Height-of-cut bracket
3. Flange locknut

4. Remove the height-of-cut bracket and front roller from the cutting unit (Figure 4).

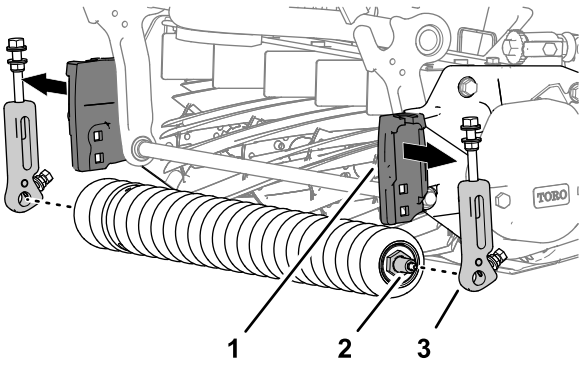

g234982

Figure 4

1. Height-of-cut support (side plate)
2. Front roller shaft
3. Height-of-cut bracket

5. Repeat step 3 for the height-of-cut bracket at the other side of the cutting unit, and remove the bracket (Figure 3).

Assembling the High Height-of-Cut Brackets

1. Assemble the 2 height-of-cut screw (3/8 x 2-3/4 inches), 4 washers (5/16 inch), and 2 flange locknuts (3/8 inch); refer to Figure 5.

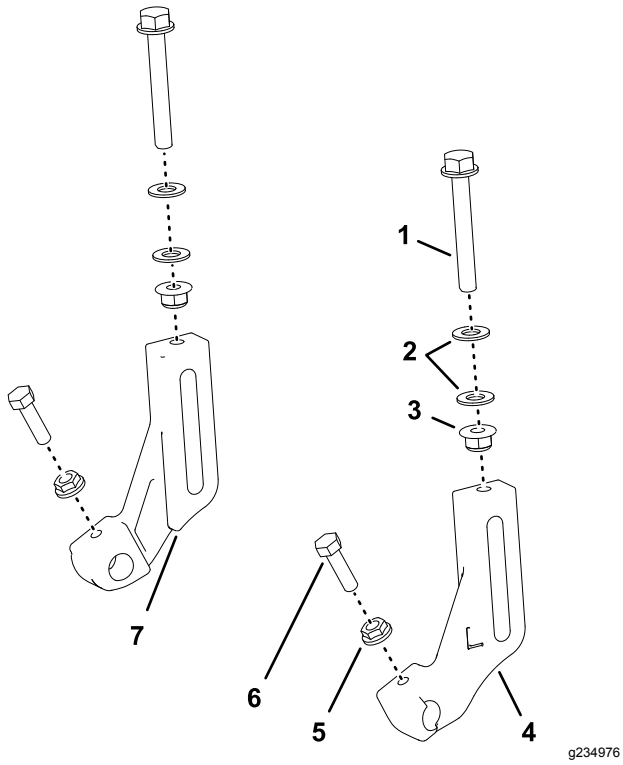

Figure 5

1. Height-of-cut screw (3/8 x 2-3/4 inches)
2. Washers (5/16 inch)
3. Flange locknut (5/16)
4. Height of cut bracket (left)
5. Serrated-flange nut (5/16 inch)
6. Bolt (5/16 x 1-1/8 inches)
7. Height of cut bracket (right)

Note: Thread the nuts onto the screws until you can measure 8 mm (5/16 inch) between the washers (Figure 6).

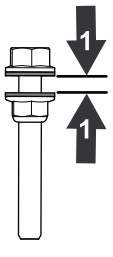

Figure 6

1. 8 mm (5/16 inch)

2. Loosely thread the height-of-cut screw into the left and right high height of cut brackets (Figure 5).

3. Loosely assemble a bolt (5/16 x 1-1/8 inches) and serrated-flange nut (5/16 inch) to each roller support of the high height of cut brackets (Figure 5).

   Note: Align the serrations of the nut toward the roller support.

Installing the Front Roller

Note: The letter “L” on the high height-of-cut bracket indicates the left bracket; the letter “R” indicates the right bracket.

1. Using the lower square hole in the HOC support of the side plate, loosely assemble a high height of cut bracket to the side plate (Figure 7) with a locknut (3/8 inch) and the carriage bolt that you retained in step 3 in Removing the Height-of-Cut Brackets (page 1).

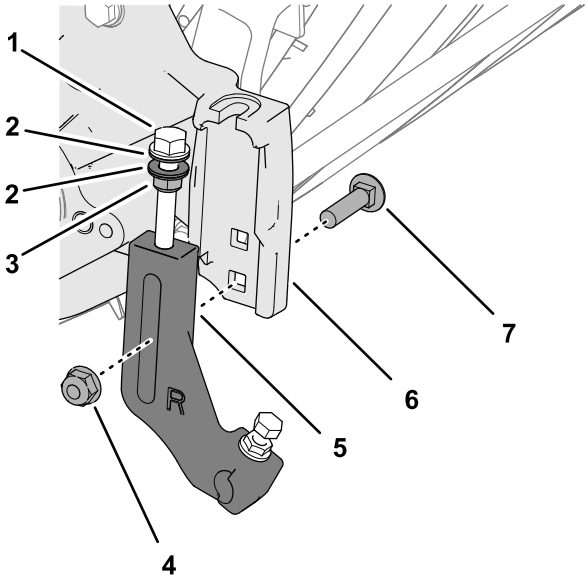

Figure 7

1. Height-of-cut screw
2. Washers
3. Flange locknut
4. Flange locknut (3/8 inch)
5. Height of cut bracket
6. Height-of-cut support (side plate)
7. Carriage bolt

Note: Position the washers on the height of cut adjusting screws at each side of the flange for the height-of-cut support on the side plate (Figure 8).

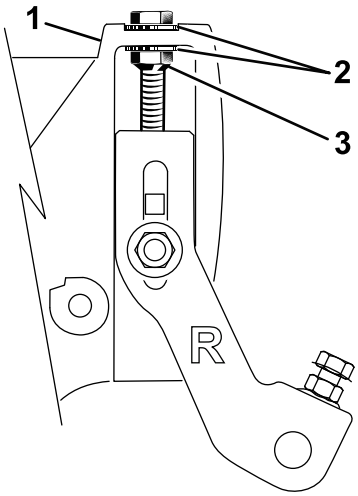

g235085

Figure 8

1. Height-of-cut screw
2. Washer
3. Flange locknut

2. Assemble the front roller shaft into the roller support of the height of cut bracket (Figure 9).

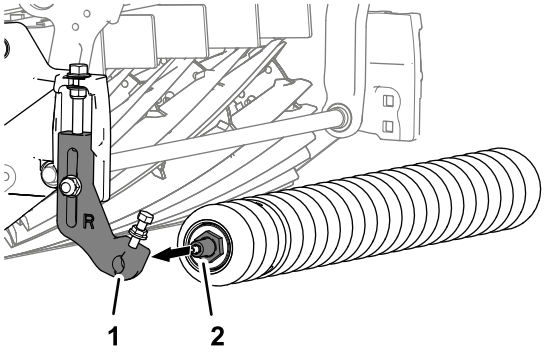

g235008

Figure 9

1. Roller support (height of cut bracket)
2. Front roller shaft

3. Assemble the other height of cut bracket to the front roller shaft and align the bracket to the height-of-cut support of the side plate as shown in Figure 10.

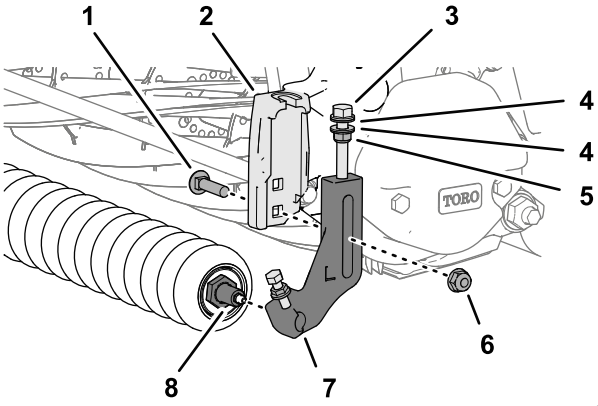

g234977

Figure 10

1. Carriage bolt
2. Height-of-cut support (side plate)
3. Height-of-cut screw
4. Washers
5. Flange locknut
6. Flange locknut (3/8 inch)
7. Height of cut bracket
8. Front roller shaft

4. Assemble the height of cut bracket to the support with the carriage bolt (Figure 10) that you removed in step 3 of Removing the Height-of-Cut Brackets (page 1) and a locknut (3/8 inch).
5. Tighten the locknuts on the height of cut adjuster screw until the washers contact the side plate flange, then loosen the nut 1/2 turn (Figure 10).
6. Center the roller between the height of cut bracket, tighten the bolts, and tighten the serrated-flange nuts at the roller support of the height of cut brackets (Figure 11).

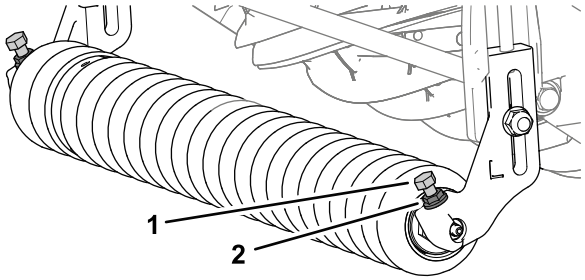

g234984

Figure 11

1. Bolt
2. Serrated-flange nut

7. Adjust the height of cut following the instructions in the cutting unit *Operator's Manual*.

Installing the Rear Roller Shims

1. Remove the 4 flange locknuts, 4 washers, and 4 carriage bolts that secure the rear roller and shims to the flange of the side plate (Figure 12).

   Note: Retain the washers and shims for installation in step 6.

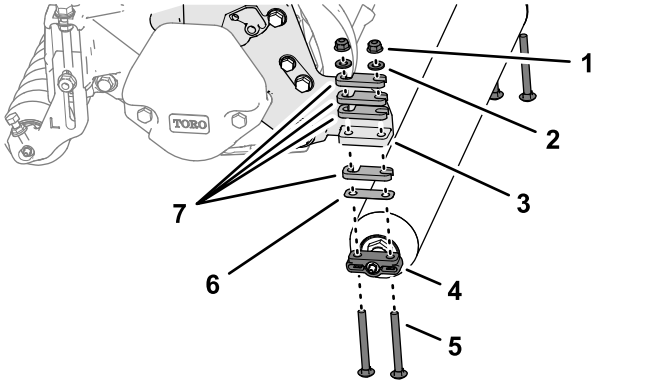

Figure 12

1. Flange locknut
2. Washer
3. Flange (side plate)
4. Rear roller bracket
5. Carriage bolt (5/16 x 3 inches)
6. Shim (0.010 inch)
7. Shim (0.25 inch)

2. Determine the aggressiveness of cut by following the instructions in the cutting unit *Operator's Manual*.
3. Assemble the spacers that you determined in step 2 to the 1 rear roller brackets (Figure 13) with the 4 carriage bolts (5/16 x 4 inches).

   Note: Use the spacers, carriage bolts and nuts (Figure 13), included in the kit to adjust a height of cut higher than 25 mm (1 inch).

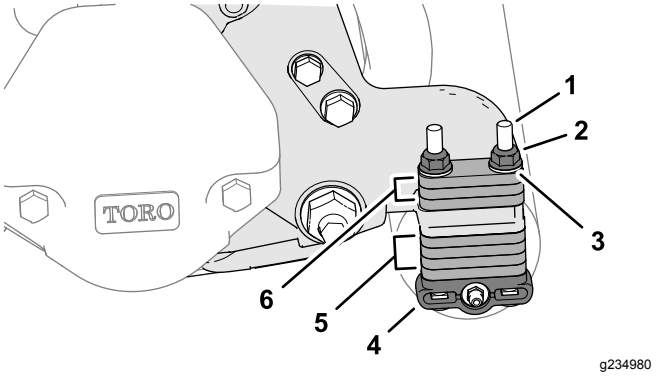

Figure 13

1. Carriage bolt (5/16 x 4 inches)
2. Flange locknut (5/16 inch)
3. Washer
4. Rear roller bracket
5. Spacers (stored position)
6. Spacers (height–of–cut position)

   Note: You can order spacers Part No. 119-0626 and longer carriage bolts (4-1/2 inches) Part No. 3230–30 to set higher heights of cut as described in the cutting unit *Operator's Manual*.
4. Assemble the spacers, rear roller brackets, and carriage bolts to the left and right side-plate flanges (Figure 13).
5. Assemble the remaining spacers onto the carriage bolts (Figure 13), above the side-plate flanges (stored position).
6. Secure the rear roller and shims to the cutting unit with the 4 washers that you removed in step 1 and the 4 flange locknuts (Figure 13).

Finishing the High Height-of-Cut Kit Installation

Machines with the Cutting Units Installed

Install the cutting units to the machine; refer to the cutting unit *Operator's Manual*.

Notes:

Notes:



Count on it.