FORM NO. 3321–188

TORO®

MODEL NO. 08857 – 80126 & UP

OPERATOR'S MANUAL

DEBRIS BLOWER

SAND PRO 2020, 3020, 5000 & 5020

To assure maximum safety, optimum performance, and to gain knowledge of the product, it is essential that you or any other operator of the machine read and understand the contents of this manual before the engine is ever started. Pay particular attention to the SAFETY INSTRUCTIONS highlighted by this symbol —



The safety alert symbol means CAUTION, WARNING or DANGER — personal safety instruction. Failure to comply with the instruction may result in personal injury.

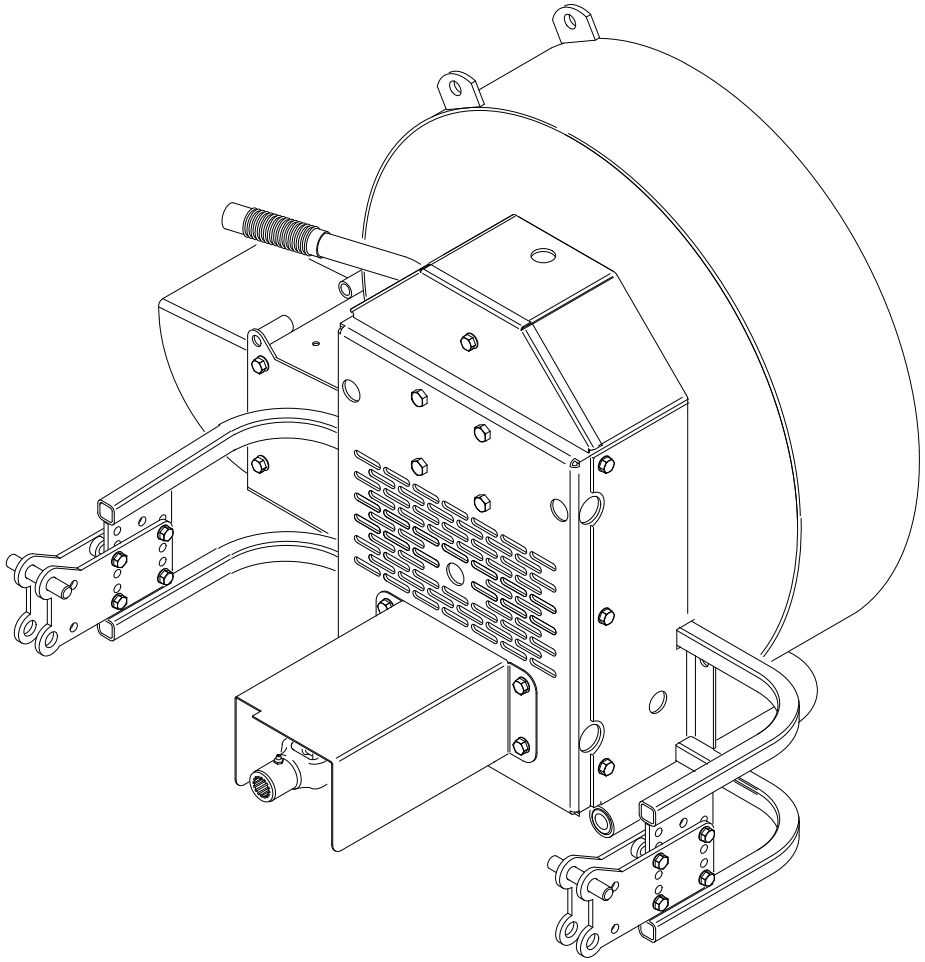

©The Toro Company — 1998

FOREWORD

The Debris Blower has advanced concepts in engineering, design and safety; and if maintained properly, will give excellent service.

Since this is a high−quality product, Toro is concerned about the future use of the machine and safety of the user. Therefore, read this manual to familiarize yourself with proper set−up, operation and maintenance instructions. The major sections of the manual are:

1. Safety Instructions
2. Set−up Instructions
3. Before Operating
4. Operating Instructions
5. Lubrication
6. Maintenance

Certain information in this manual is emphasized. DANGER, WARNING and CAUTION identify personal safety related information. IMPORTANT identifies mechanical information demanding special attention. Be sure to read this directive because it deals with the possibility of damaging a part or parts of the machine. NOTE identifies general information worthy of special attention.

TABLE OF CONTENTS

	Page
SAFETY INSTRUCTIONS	3−4
SAFETY AND INSTRUCTION DECALS	5
SPECIFICATIONS	6
LOOSE PARTS	6
SET−UP INSTRUCTIONS	7−9
Install Wire Harness	7
install Spline Shaft	7
Mount Bumper Assembly	8
Mount Blower	8
Install Drive Shaft	9
Grease Blower	9
BEFORE OPERATING	10
Adjust Discharge Opening	10
Adjust Blower Housing Angle	10
OPERATING INSTRUCTIONS	10
Controls	10
Operating Tips	10
LUBRICATION	11
Grease Bearings & Bushings	11
IDENTIFICATION AND ORDERING	11
Model And Serial Numbers	11
WARRANTY	Back Cover

SAFETY INSTRUCTIONS



The safety alert symbol means CAUTION, WARNING or DANGER — "personal safety instruction". Read and understand the instruction because it has to do with safety. Failure to comply with the instruction may result in personal injury.

Hazard control and accident prevention are dependent upon the awareness, concern, and proper training of the personnel involved in the operation, transport, maintenance, and storage of the machine. Improper use or maintenance of the machine can result in injury or death. To reduce the potential for injury or death, comply with the following safety instructions.

BEFORE OPERATING

1. Read and understand the contents of this Operator's Manual before operating the machine. Become familiar with all controls and know how to stop quickly. A free replacement manual is available by sending complete Model and Serial Number to:

The Toro Company
8111 Lyndale Avenue South
Minneapolis, Minnesota 55420−1196

2. Never allow children to operate the machine. Do not allow adults to operate machine without proper instruction. Only trained operators who have read this manual should operate this machine.

3. Never operate the machine when under the influence of drugs or alcohol.

4. Keep all bystanders away from the operating area.

5. Keep all shields and safety devices in place. If a shield, safety device or decal is illegible or damaged, repair or replace it before operation is commenced. Also tighten any loose nuts, bolts and screws to assure machine is in safe operating condition.

6. Do not operate machine while wearing sandals, tennis shoes, sneakers or shorts. Also, do not wear loose fitting clothing which could get caught in moving parts. Always wear long pants and substantial shoes. Wearing safety glasses, safety shoes and a helmet is advisable and required by some local ordinances and insurance regulations.

7. Check interlock switches daily for proper operation (Refer To Section in Sand Pro Operator's Manual on Checking Interlock Switches). Do not rely entirely on safety switches - shut off engine before getting off seat. If a switch fails, replace it before operating the machine. The interlock system is for your protection, so do not bypass it. Replace all interlock switches every two years. Interlock switches should be adjusted to prevent the engine from starting unless traction pedal is released (neutral position) and clutch lever is DISENGAGED.

8. Fill fuel tank before starting the engine. Avoid spilling any fuel. Since fuel is flammable, handle it carefully.

A. Use an approved fuel container.

B. Do not fill tank while engine is hot or running.

C. Do not smoke while handling gasoline.

D. Fill fuel tank outdoors and up to about one inch from top of the tank, not the filler neck.

E. Wipe up any spilled gasoline.

WHILE OPERATING

9. Do not run the engine in a confined area without adequate ventilation. Exhaust fumes are hazardous and could possibly be deadly.

10. Maximum seating capacity is one person. Never carry passengers.

11. Sit on the seat when starting the engine and operating the machine.

12. Before starting the engine:

A. Engage the parking brake.

B. Ensure traction pedal is in neutral and clutch lever is in the OFF, disengaged position.

C. After engine is started, release parking brake and keep foot off traction pedal. Machine must not move. If movement is evident, the neutral return mechanism is adjusted incorrectly; therefore, shut engine off and adjust until machine does not move when traction pedal is released.

13. Using the machine demands attention, and to prevent loss of control:

A. Operate only in daylight or when there is good artificial light.

B. Drive slowly and watch for holes or other hidden hazards.

C. Use care when entering and leaving sand traps. Use extreme caution around ditches, creeks or other hazards.

D. Reduce speed when making sharp turns and when turning on hillsides.

E. Avoid sudden starts and stops. Do not go from reverse to full forward without first coming to a complete stop.

F. Before backing up, look to the rear and assure no one is behind the machine.

G. Watch out for traffic when near or crossing roads. Always yield the right−of −way.

SAFETY INSTRUCTIONS

14. This product may exceed noise levels of 90 dB(A) at the operator position. Ear protectors are recommended for prolonged exposure to reduce the potential of permanent hearing damage.

15. Stay away from discharge opening when machine is operating. Keep all bystanders away from the discharge opening and don't direct discharge toward bystanders.

16. If engine stalls or machine loses headway and cannot make it to the top of a slope, do not turn machine around. Always back slowly straight down the slope.

17. DON'T TAKE AN INJURY RISK! When a person or pet appears unexpectedly in or near the operating area, **STOP OPERATION**. Careless operation, combined with terrain angles, ricochets, or improperly positioned guards can lead to thrown object injuries. Do not resume operation until area is cleared.

18. Do not touch engine or muffler while engine is running or soon after it is stopped. These areas could be hot enough to cause a burn.

19. Before getting off the seat:

A. Move traction pedal to neutral position and remove foot from pedal.

B. Set the parking brake and disengage the clutch lever.

C. Shut the engine off and remove the key from the ignition switch. Wait for all movement to stop before getting off the seat.

20. Remove key from ignition switch whenever machine is left unattended.

MAINTENANCE

21. Remove key from ignition switch to prevent accidental starting of the engine when servicing, adjusting or storing the machine.

22. Perform only those maintenance instructions described in this manual. If major repairs are ever needed or assistance is desired, contact an Authorized Toro Distributor.

23. To reduce potential fire hazard, keep the engine free of excessive grease, grass, leaves and accumulations of dirt. Never wash a warm engine or any electrical parts with water.

24. Be sure machine is in safe operating condition by keeping nuts, bolts and screws tight. Check the rotor bearing mounting bolts and nuts frequently to be sure they are tightened to specification.

25. Make sure all hydraulic line connectors are tight, and all hydraulic hoses and lines are in good condition before applying pressure to the system.

26. Keep body and hands away from pin hole leaks in hydraulic lines that eject high pressure hydraulic fluid. Use cardboard or paper to find hydraulic leaks. Hydraulic fluid escaping under pressure can penetrate skin and cause injury. Fluid accidentally injected into the skin must be surgically removed within a few hours by a doctor familiar with this form of injury or gangrene may result.

27. Before disconnecting or performing any work on the hydraulic system, all pressure in system must be relieved by stopping engine.

28. If the engine must be running to perform a maintenance adjustment, keep hands, feet, clothing and other parts of the body away from the fan and other moving parts.

29. Do not overspeed the engine by changing governor settings. To be sure of safety and accuracy, have an Authorized TORO Distributor check maximum engine speed with a tachometer.

30. Engine must be shut off before checking oil or adding oil to the crankcase.

31. At the time of manufacture the blower conformed to applicable safety standards in effect for riding mowers. Therefore, to ensure optimum performance and safety, always purchase genuine TORO replacement parts and accessories to keep the Toro all TORO. NEVER USE "WILL–FIT" REPLACEMENT PARTS AND ACCESSORIES MADE BY OTHER MANUFACTURERS. Look for the TORO logo to assure genuineness. Using unapproved replacement parts and accessories could void the warranty of The Toro Company.

SAFETY AND INSTRUCTION DECALS

The following decals are installed on the machine. If any become damaged or illegible, replace it. The decal part number is listed below and in your parts catalog. Replacements can be ordered from your Authorized Toro Distributor.

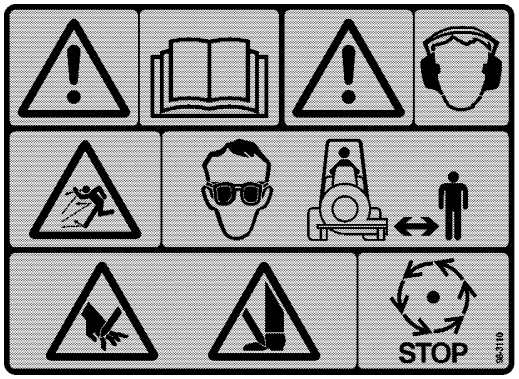

On Belt Housing
(Part No. 98−3110)

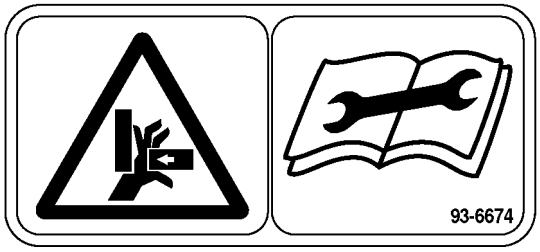

On Fan Housing
(Part No. 93−6674)

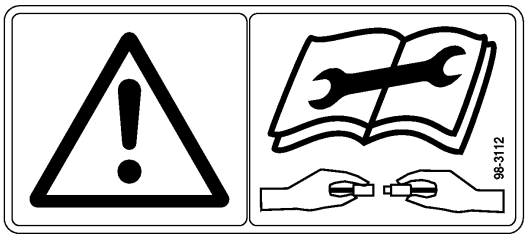

On Belt Housing
(Part No. 98−3112)

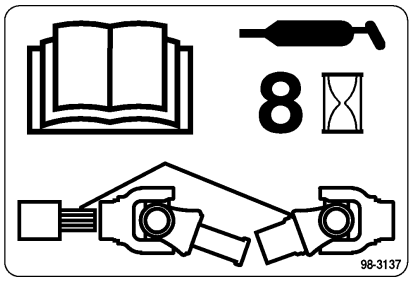

On PTO Cover
(Part No. 98−3137)

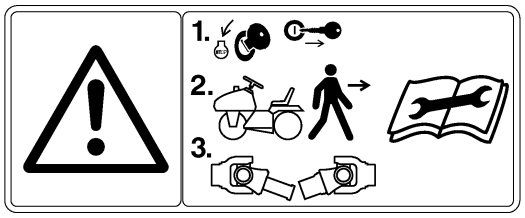

On PTO Cover
(Part No. 98−3113)

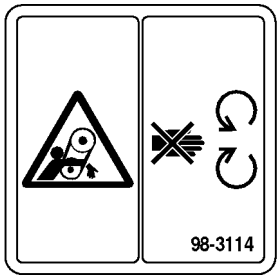

Behind Belt Cover
(Part No. 98−3114)

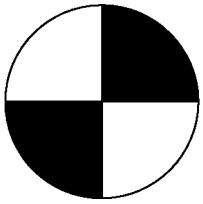

On Fan Shaft
(Part No. 98−3111)

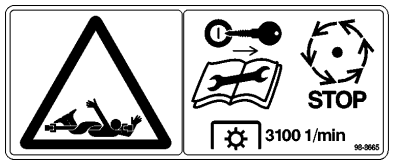

On PTO Cover
(Part No. 98−8665)

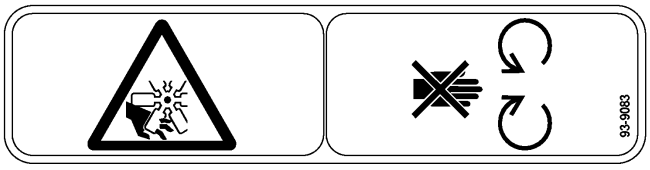

On Fan Screen
(Part No. 93−9083)

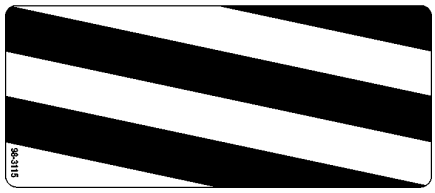

On Drive Shaft
(Part No. 98−3115)



On Belt Housing
(Part No. 98−3116)

SPECIFICATIONS

Fan: Backward curved, cast aluminum fan. 12 blades per side, 21" outside diameter, 6.375" width, 34 lbs.

Fan Housing: 10 gauge steel face plates welded to 10 gauge wrapper. Increasing scroll from cutoff.

Fan Drive: PTO driven single B section belt drive to fan. Final drive ratio of 1.4:1 with a over running clutch pulley on input shaft. PTO and fan shaft rotate on greaseable ball bearing.

Fan Speed: 2100 rpm

Fan Output: 2850 CFM, 85 mph.

Outlet: Outlet opening is 46 square in. with adjustable discharge deflector.

Weight: 180 lbs.

Optional Equipment:

Discharge Chute Kit Model No. 08860

Specifications and design subject to change without notice.

LOOSE PARTS

NOTE: Use this chart as a checklist to assure all parts have been received. Without these parts, total set−up cannot be completed.

Description	Qty.	Use
Blower Assembly	1	
*Relay	1	Mount to Sand Pro frame
*Capscrew #10−24 x .38" lg. *Nut #10−24	1 1	Connect neutral switch wire to harness
*Wire Harness *Wire Tie	1 4	Connect to relay, solenoid & blower
*Spline Shaft *Key 1 *Square Head Setscrew *Power Take−Off Cover *Capscrew 3/8−16 x .50" lg. (Sand Pro 2020/3020) (Sand Pro 5000/5020 only) *Flat Washer .40 I.D. x .81 O.D. (Sand Pro 2020/3020) (Sand Pro 5000/5020 only)	1 2 1 2 4 2 4	Mount spline shaft to output shaft
*Receiver Bracket *Capscrew 3/8−16 x 1.25" lg. (Sand Pro 2020/3020 only) *Capscrew 3/8−16 x 1.50" lg. (Sand Pro 5000/5020 only) *Flat Washer .40 I.D. x .81 O.D. *Locknut 3/8−16 *Capscrew 1/2−13 x .875" lg. *Flat Washer .56 I.D. x 1.063 O.D. *Spacer .25" Thk. (Sand Pro 2020/3020 w/ fenders only) *Spacer .625" lg. (Sand Pro 5000/5020 only) *Spacer .375" lg. (Sand Pro 5000/5020 w/ matt rack only)	2 2 2 2 2 2 2 2 2 2 2	Mount to Sand Pro frame
Bumper Assembly Capscrew 3/8−16 x 2.00" Flat Washer .40 I.D. x .81 O.D. Locknut 3/8−16	1 4 4 4	Mount to blower frame
Hitch Capscrew 3/8−16 x 2" lg. Flat Washer .40 I.D. x .81 O.D. Spacer Locknut 3/8−16	2 8 16 8 8	Mount to blower frame
*Clevis pin *Hair Pin Cotter	2 2	Secure blower to Sand Pro
*Drive Shaft	1	Mount Drive Shaft to Blower
Operator's Manual	1	Read Before Operating Machine
Parts Catalog	1	
Registration Card	1	Fill Out And Return To Toro

* Supplied in Installation Kit

SET−UP INSTRUCTIONS

NOTE: One of the following installation kits is required to mount the debris blower to the Sand Pro.

Kit Model No. 08858 for Sand Pro 2020 & 3020
Kit Model No. 08859 for Sand Pro 5000 & 5020

INSTALL WIRE HARNESS (Fig. 1−2)

1. Mount the relay and wire harness (supplied in installation kit) to Sand Pro as follows:

A. On Sand Pro 2020/3020 only− Remove nut from capscrew securing steering bracket to frame. Insert relay and black wire from harness onto capscrew and install nut.

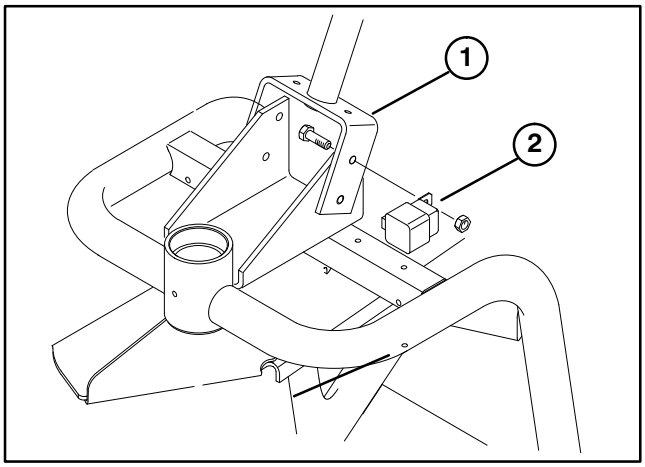

Figure 1
1. Steering bracket
2. Relay

B. On Sand Pro 5000/5020 only − Remove nut from capscrew securing solenoid to frame panel. Insert relay and black wire from harness onto capscrew and install nut.

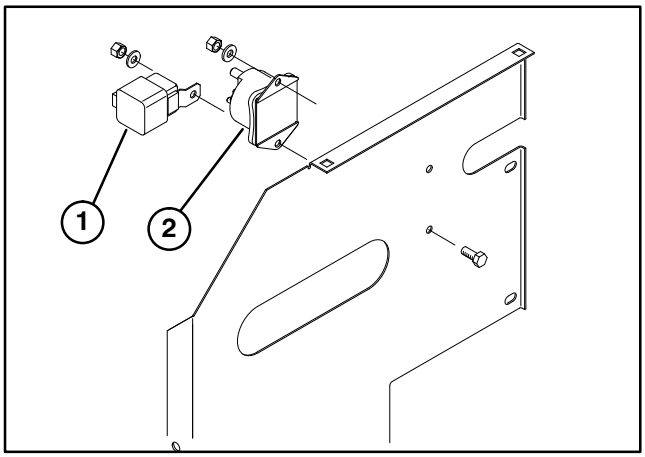

Figure 2
1. Relay

2. Disconnect gray wire (neutral switch) from solenoid and connect to blue wire on harness with #10−24 x .38" capscrew and nut. Wrap connection with electrical tape.

3. Connect gray harness wire to solenoid post that grey neutral switch wire was connected.

4. Connect orange harness wire to solenoid post that has a green wire attached to it.

5. Plug wire harness connector into relay.

6. Route wire harness to right rear corner of Sand Pro frame. Secure harness and any excess to frame with wire ties. Make sure harness does not contact any hot or moving parts.

INSTALL SPLINE SHAFT (Fig. 3−4)

1. Remove fasteners securing output shaft cover to rear of engine on Sand Pro 5000/5020 or to rear of hydrostat on Sand Pro 2020/3020. Remove and discard cover.

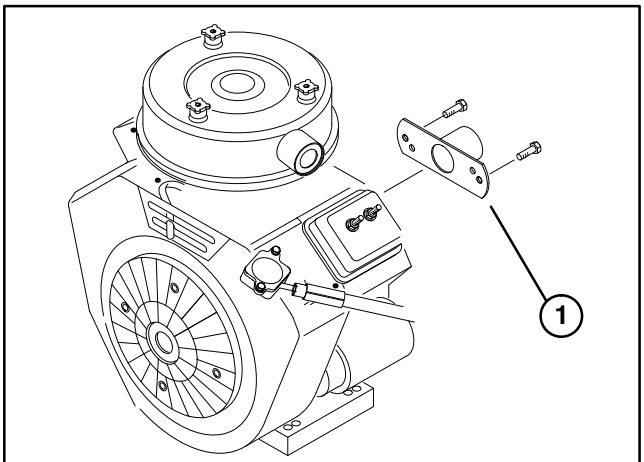

Figure 3
1. Output shaft cover

2. Mount spline shaft (supplied in installation kit) to output shaft with key and (2) square head set screw. Apply Loctite to set screw threads and Never−Seez to output shaft before installation. Torque set screws to 140 in/lb.

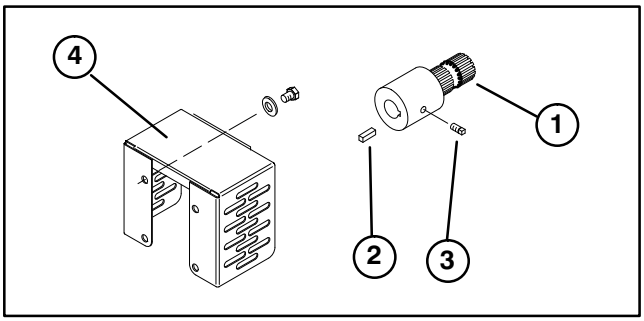

Figure 4
1. Spline shaft
2. Key
3. Square head setscrew
4. Power take−off cover (Sand Pro 5000/5020 cover shown)

3. Using old output shaft cover mounting holes, mount new power take−off cover (supplied in installation kit) with (2) 3/8−16 x .50" lg. capscrews and .40 I.D. x .81 O.D. flat washers.

SET–UP INSTRUCTIONS

MOUNT BUMPER ASSEMBLY (Fig. 5)

1. Mount bumper assembly to blower with (4) 3/8–16 x .50" Lg. capscrews, .40 I.D. x .81 O.D. flatwashers and locknuts.

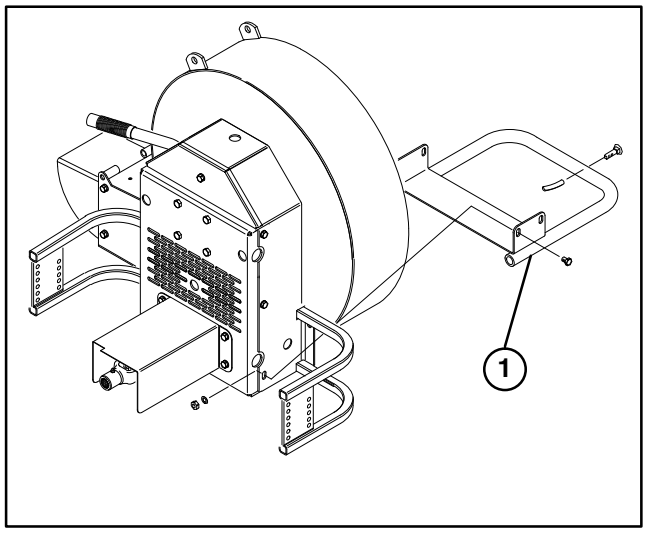

Figure 5
1. **Bumper assembly**

MOUNT BLOWER (Fig. 6–8)

1. Mount a receiver bracket (supplied in installation kit) to each end Sand Pro rear frame member as follows:

A. On Sand Pro 2020/3020 – Mount top of receiver bracket to frame with a 3/8–16 x 1.50" lg. capscrew, (2) .40 I.D. x .81 O.D. flat washers and locknut. Mount bottom of receiver bracket to frame with a 1/2–13 x .875" lg. capscrews and (2) .56 I.D. x 1.063 O.D. flat washers. Position components as shown in figure 6.

Note: Spacer, shown in figure 6, is also required If machine is equipped with fenders.

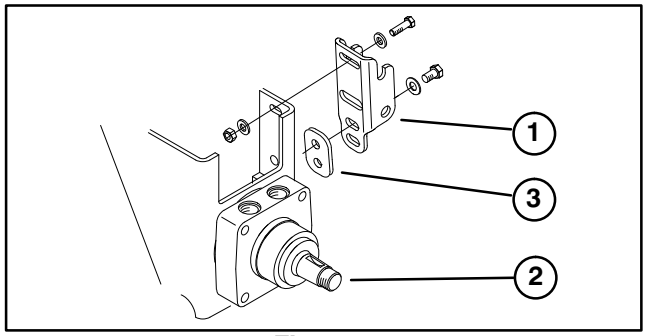

Figure 6
1. **Receiver bracket**
2. **Left rear wheel motor**
3. **Spacer**

Note: Rear wheel shown removed for clarity. Do not remove rear wheel.

B. On Sand Pro 5000/5020 – Mount top of receiver bracket to frame with a 3/8–16 x 1.25" lg. capscrew, (2) .40 I.D. x .81 O.D. flat washers, .625" lg. spacer and locknut. Mount bottom of receiver bracket to frame with a 1/2–13 x .875" lg. capscrew and (2) .56 I.D. x 1.063 O.D. flat washers. Position components as shown in figure 7.

Note: Use .375" lg. spacers instead of .625 lg. spacers when machine is equipped with matt rack.

Note: Rear wheel shown removed for clarity. Do not remove rear wheel.

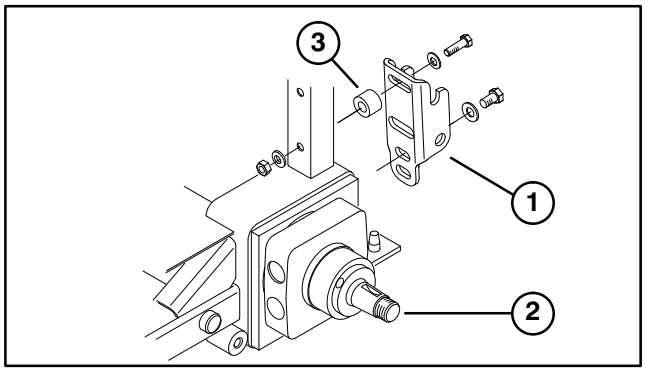

Figure 7
1. **Receiver bracket**
2. **Left rear wheel motor**
3. **Spacer**

2. Slide a hitch onto each side of blower frame. Use forward set of hitch mounting holes when mounting blower on a Sand Pro 2020 or Sand Pro 3020 and rear set of holes for a Sand Pro 5000/5020. Secure hitch to blower frame with (4) 3/8–16 x 2" lg. capscrews, .40 I.D. x .69 O.D. flatwashers and (8) spacers. Spacers to be positioned between frame and hitch on each side.

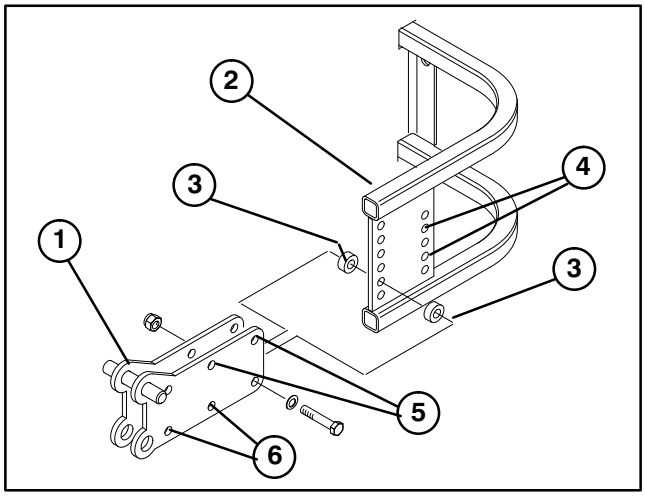

Figure 8
1. **Hitch**
2. **Blower frame**
3. **Spacer**
4. **Recommended holes**
5. **Use for Sand Pro 5000/5020**
6. **Use for Sand Pro 2020/3020**

3. Lift blower and position hitch pins into slots on top of receiver brackets on Sand Pro.

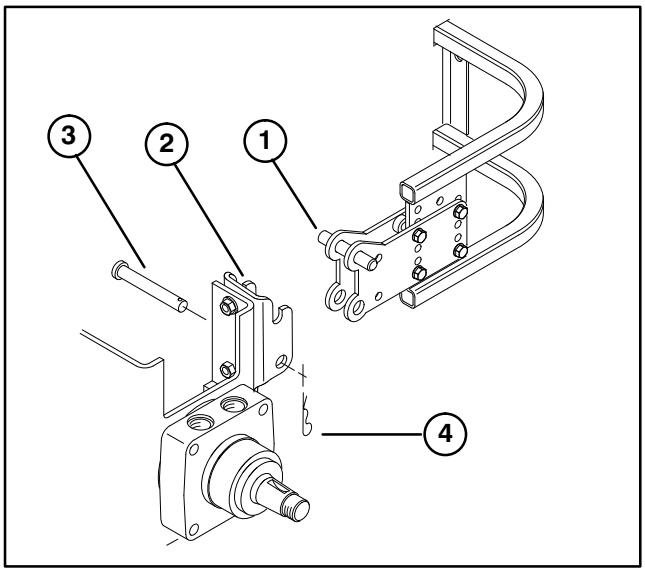

Figure 9

1. **Hitch pin**
2. **Receiver bracket**
3. **Clevis pin**
4. **Hairpin cotter**

4. Secure each hitch to receiver bracket with a clevis pin and hair pin cotter.

INSTALL DRIVE SHAFT (Fig. 10)

1. Insert drive shaft spline (supplied in installation kit) into blower coupler.

2. Rotate shaft until splines line up.

Note: To aid in the rotation of drive shaft, insert screw driver into universal joint.

3. Slide drive shaft coupler onto spline shaft until it clicks.

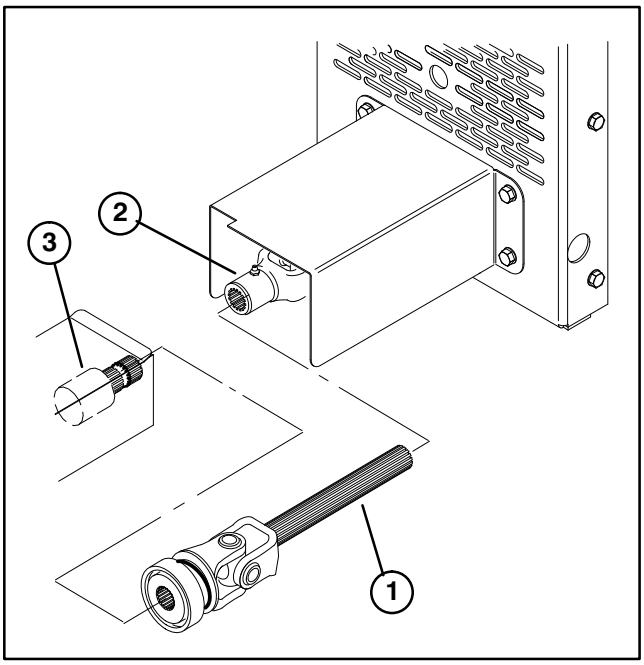

Figure 10

1. **Drive shaft**
2. **Blower coupler**
3. **Spline shaft**

4. Plug wire harness into blower harness.

GREASE BLOWER

Before the Debris Blower is operated, it must be greased to assure proper lubrication. Refer to Lubrication section of manual. Failure to properly grease the unit will result in premature failure of critical parts.

BEFORE OPERATING

ADJUST DISCHARGE OPENING (Fig. 11)

The discharge opening is adjustable to increase or decrease air output velocity and volume. Decreasing discharge opening size will increase velocity.

1. Loosen discharge opening deflector mounting screws.

2. Pivot deflector to desired opening.

3. Tighten mounting screws.

ADJUST BLOWER HOUSING ANGLE (Fig. 11)

The blower housing is adjustable to raise or lower the discharge opening of the blower.

1. Remove capscrew securing cover to rear of blower housing.

2. Loosen (4) blower housing mounting screws. Through (3) holes in rear bracket and behind cover

3. Pivot blower housing to desired angle.

4. Tighten mounting screws and install cover.

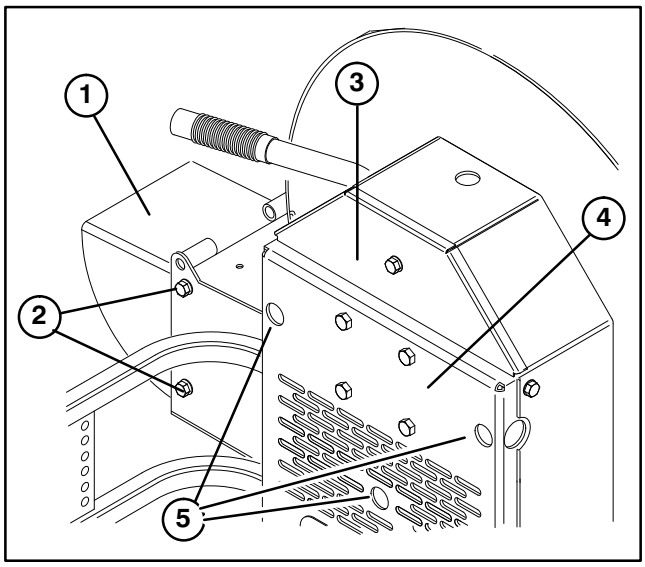

Figure 11

1. **Discharge opening deflector**
2. **Deflector mounting screws**
3. **Cover**
4. **Rear bracket**
5. **Adjustment holes**

OPERATING INSTRUCTIONS

CONTROLS

Clutch Engagement Lever (Fig. 12)– Pull lever upward to engage clutch, push lever downward to disengage clutch.

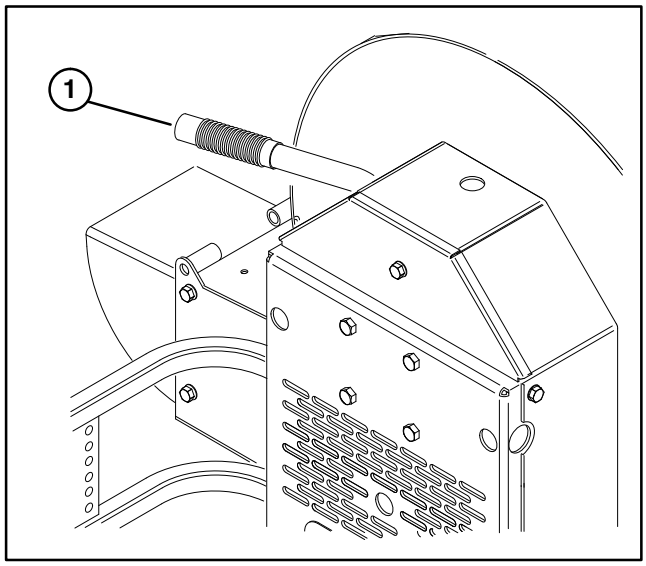

Figure 12

1. **Clutch engagement lever**

OPERATING TIPS

WARNING

DISCHARGED AIR HAS CONSIDERABLE FORCE AND COULD CAUSE INJURY OR LOSS OF FOOTING.

- **Stay away from discharge opening when machine is operating.**
- **Keep bystanders away from discharge opening when machine is running.**

1. Practice blowing material. It is advisable to blow the same direction the wind is blowing to prevent material from blowing back into the cleared area.

LUBRICATION

GREASE BEARINGS & BUSHINGS (Fig. 13)

The debris blower must be lubricated regularly. If machine is operated under normal conditions, lubricate castor and fan bearings and bushings with No. 2 general purpose lithium base grease or molybdenum base grease, after every 8 hours of operation or daily, whichever comes first. Lubricate fittings immediately after every washing, regardless of the interval listed.

1. The debris blower has (6) bearings and bushings that must be lubricated. The lubrication points are: fan shaft bearings (2), drive shaft bearings (2), over running clutch (1) and PTO drive shaft (2).

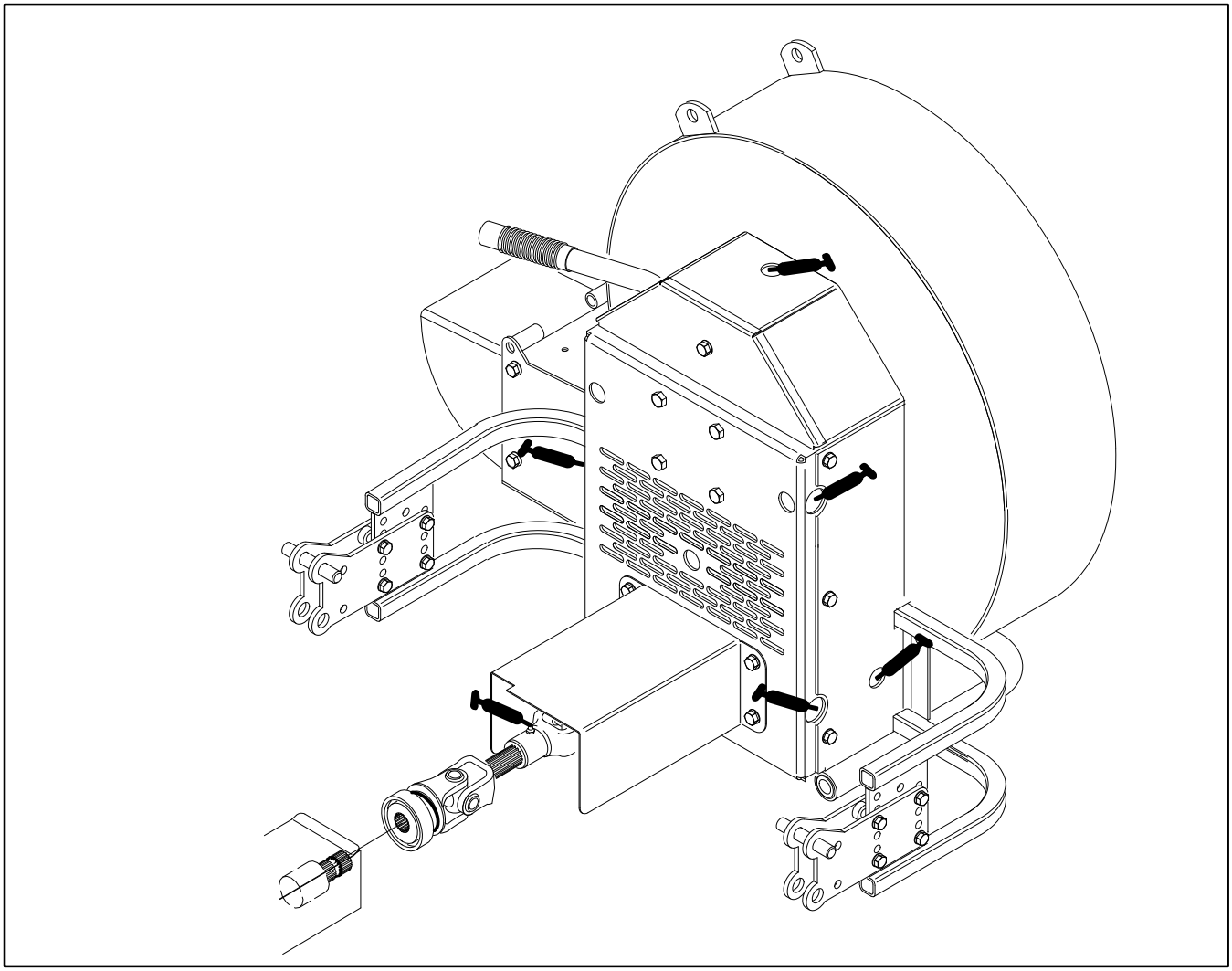

Figure 13

MAINTENANCE

ADJUSTING BELT (Fig. 14–16)

1. Remove capscrews, flatwashers and locknuts securing bumper assembly to blower. Remove bumper asembly.

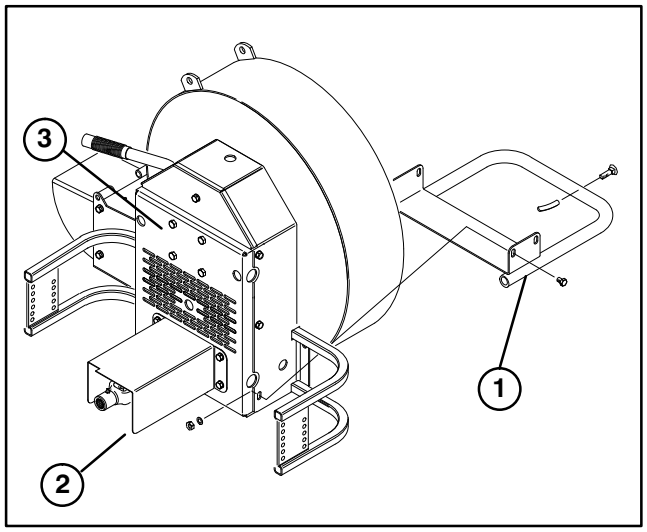

Figure 14

1. **Bumper assembly**
2. **P.T.O. cover**
3. **Back cover assembly**

2. Unplug wire harness from blower harness.

3. Disconnect drive shaft coupler from spline shaft.

4. Remove clevis pins and hair pin cotters securing blower hitches to receiver brackets. Remove blower from traction unit.

5. Lay blower onto front screen so mounting hitches point upward.

6. Remove capscrews and flatwashers securing P.T.O. cover to back cover assembly of blower. Remove P.T.O. cover.

7. Remove (8) capscrews and locknuts securing fan shaft bearing and P.T.O. shaft bearing assemblies to inside of back cover assembly. **Do not remove bearings from shafts.**

8. Remove (6) capscrews and flatwashers securing back cover assembly to blower. Remove back cover assembly from blower.

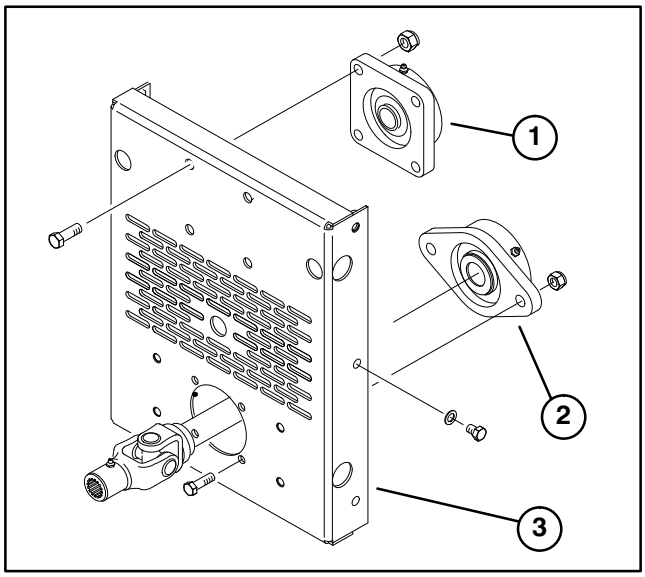

Figure 15

1. **Fan shaft bearing**
2. **P.T.O. shaft bearing**
3. **Back cover assembly**

9. Replace belt. Make sure belt is routed around fan and P.T.O. pulleys and against idler pulley.

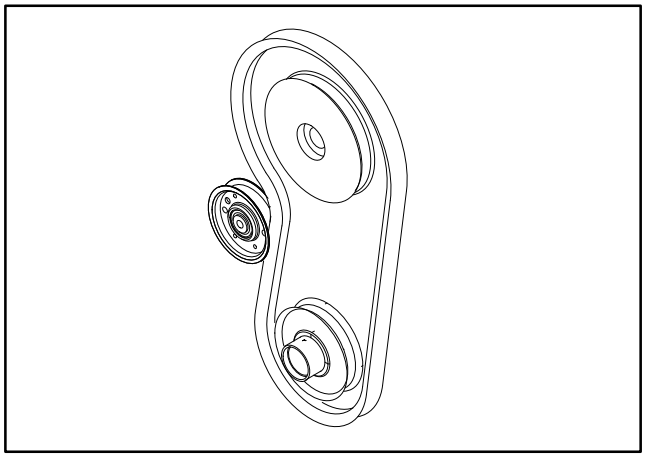

Figure 16

10. Loosely install back cover assembly to blower with (6) capscrews and flatwashers previously removed.

11. Install bearing assemblies to inside of back cover assembly with (8) capscrews and locknuts previously removed.

12. Rotate fan to check for any interference between fan and fan housing. Move back cover assembly forward or backward to gain required clearance and tighten (6) capscrews and flatwashers securing back cover assembly to blower.

IDENTIFICATION AND ORDERING

MODEL AND SERIAL NUMBERS

The debris blower has two identification numbers: a model number and a serial number. The two numbers are stamped into a plate mounted on rear of blower housing. In any correspondence concerning the blower, supply the model and serial numbers to assure that correct information and replacement parts are obtained.

To order replacement parts from an authorized TORO Distributor, supply the following information:

1. Model and serial numbers of the machine.

2. Part number, description and quantity of parts desired.

Note: Do not order by reference number if a parts catalog is being used; use the part number.

The Toro Commercial Products Two Year Limited Warranty

The Toro Company warrants your 1996 or newer Toro Commercial Product ("Product") purchased after January 1, 1997, to be free from defects in materials or workmanship for the period of time listed below. Where a warrantable condition exists, Toro will repair the Product at no cost to you including diagnosis, labor, parts, and transportation. This warranty begins on the date the Product is delivered to the original retail purchaser.

Warranty Duration: Two years or 1500 operational hours*, whichever occurs first.
***Product equipped with hour meter**

Owner Responsibilities:

As the Product owner, you are responsible for required maintenance and adjustments stated in your Owner's Manual. Failure to perform required maintenance and adjustments can be grounds for disallowing a warranty claim.

Instructions for Obtaining Warranty Service:

You are responsible for notifying the Commercial Products Distributor or Authorized Commercial Products Dealer from whom you purchased the Product as soon as you believe a warrantable condition exists.

If you need help locating a Commercial Products Distributor or Authorized Dealer, or if you have questions regarding your warranty rights or responsibilities, you may contact us at:

Toro Commercial Products Service Department
8111 Lyndale Avenue South
Minneapolis, MN, 55420–1196
Telephone: (612) 888–8801
Facsimile: (612) 887–8258
E–Mail: Commercial.Service@Toro.Com

Maintenance Parts:

Parts scheduled for replacement as required maintenance ("Maintenance Parts"), are warranted for the period of time up to the scheduled replacement time for that part.

Items/Conditions Not Covered:

Not all product failures or malfunctions that occur during the warranty period are defects in materials or workmanship. The items / conditions listed below are not covered by this warranty:

- Product failures which result from the use of non–Toro replacement parts, or from installation and use of add–on, modified, or unapproved accessories are not covered.
- Product failures which result from failure to perform required maintenance and/or adjustments are not covered.
- Product failures which result from operating the Product in an abusive, negligent or reckless manner are not covered.
- This warranty does not apply to parts subject to consumption through use unless found to be defective. Examples of parts which are consumed, or used up, during normal Product operation include, but are not limited to, blades, reels, bedknives, tines, spark plugs, castor wheels, tires, filters, belts, etc.
- This warranty does not apply to failures caused by outside influence. Items considered to be outside influence include, but are not limited to, weather, storage practices, contamination, use of unapproved coolants, lubricants, additives, or chemicals, etc.
- This warranty does not apply to normal "wear and tear" items. Normal "Wear and Tear" includes, but is not limited to, damage to seats due to wear or abrasion, worn painted surfaces, scratched decals or windows, etc.

Other Legal Disclaimers:

The above remedy of product defects through repair by an authorized distributor or dealer is the purchaser's sole remedy for any defect. This warranty gives you specific legal rights, and you may also have other rights which vary from state to state.

Except for the Emissions warranty referenced below, if applicable, there is no other express warranty. All implied warranties of merchantability and fitness for use are limited to the duration of the express warranty.

Some states do not allow limitations on how long an implied warranty lasts, so the above limitation may not apply to you.

The Toro Company is not liable for indirect, incidental or consequential damages in connection with the use of the Product, including any cost or expense of providing substitute Product or service during periods of malfunction or non–use.

Some states do not allow the exclusion of incidental or consequential damages, so the above exclusion may not apply to you.

Note to California residents: The Emissions Control System on your Product may be covered by a separate warranty meeting requirements established by the U.S. Environmental Protection Agency (EPA), or the California Air Resources Board (CARB). The hour limitations set forth above do not apply to the Emissions Control System Warranty. Refer to the California Emission Control Warranty Statement printed in your Owner's Manual or contained in the engine manufacturer's documentation for details.