Form No. 3380-251 Rev B

TORO®

Count on it.

Operator's Manual

Greensmaster® 3150 2-Wheel Drive Traction Unit

Model No. 04358—Serial No. 314000001 and Up

Register at www.Toro.com.
Original Instructions (EN)

CE

3380-251 B

This product complies with all relevant European directives, for details please see the separate product specific Declaration of Conformity (DOC) sheet.

⚠ WARNING

CALIFORNIA
Proposition 65 Warning

This product contains a chemical or chemicals known to the State of California to cause cancer, birth defects, or reproductive harm.

The engine exhaust from this product contains chemicals known to the State of California to cause cancer, birth defects, or other reproductive harm.

Important: **This engine is not equipped with a spark arrester muffler. It is a violation of California Public Resource Code Section 4442 to use or operate the engine on any forest-covered, brush-covered, or grass-covered land. Other states or federal areas may have similar laws.**

This spark ignition system complies with Canadian ICES-002.

Introduction

This machine is a ride-on, reel-blade lawnmower intended to be used by professional, hired operators in commercial applications. It is primarily designed for cutting grass on well-maintained lawns in parks, golf courses, sports fields, and on commercial grounds. It is not designed for cutting brush, mowing grass and other growth alongside highways, or for agricultural uses.

Read this information carefully to learn how to operate and maintain your product properly and to avoid injury and product damage. You are responsible for operating the product properly and safely.

You may contact Toro directly at www.Toro.com for product and accessory information, help finding a dealer, or to register your product.

Whenever you need service, genuine Toro parts, or additional information, contact an Authorized Service Dealer or Toro Customer Service and have the model and serial numbers of your product ready. Figure 1 identifies the location of the model and serial numbers on the product. Write the numbers in the space provided.

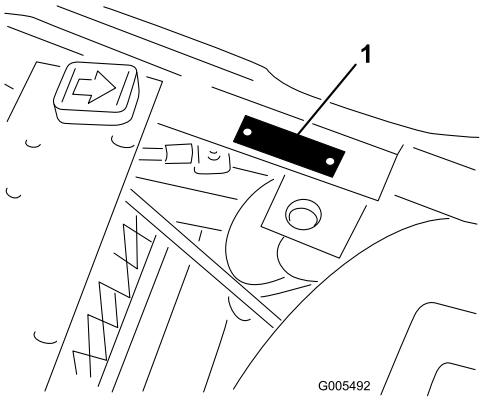

g005492

Figure 1

1. Model and serial number location

Model No. _____

Serial No. _____

This manual identifies potential hazards and has safety messages identified by the safety alert symbol (Figure 2), which signals a hazard that may cause serious injury or death if you do not follow the recommended precautions.



g000502

Figure 2

1. Safety alert symbol

This manual also uses 2 words to highlight information. **Important** calls attention to special mechanical information and **Note** emphasizes general information worthy of special attention.

© 2017—The Toro® Company
8111 Lyndale Avenue South
Bloomington, MN 55420

Contact us at www.Toro.com.
Printed in the USA
All Rights Reserved

Contents

Safety 4
Safe Operating Practices 4
Toro Mower Safety 6
Sound Power Level 7
Sound Pressure Level 7
Vibration Level 7
Safety and Instructional Decals 8
Setup 12
1 Activating and Charging the Battery 13
2 Installing the Battery 14
3 Installing the Roll Over Protection System (ROPS) 15
4 Installing the Cutting Units (For cutting unit models 04610, 04611, 04616, 04618, 04619, and 04624 only) 15
5 Adding Rear Ballast and Weight Kit 16
6 Installing the CE Guard Kit 17
7 Installing CE Decals 17
Product Overview 18
Controls 18
Specifications 21
Attachments/Accessories 21
Operation 21
Think Safety First 21
Checking the Engine Oil 21
Filling the Fuel Tank 22
Checking the Hydraulic Fluid Level 23
Checking the Tire Pressure 24
Checking the Torque of the Wheel Nuts 24
Break-in Period 24
Starting the Engine 25
Checking the Safety Interlock System 25
Checking the Leak Detector 26
Setting the Reel Speed 27
Preparing the Machine for Mowing 28
Training Period 28
Before Mowing 28
Mowing 28
Leak Detector Operation 30
Transport Operation 30
Inspection and Cleanup After Mowing 30
Towing the Traction Unit 30
Maintenance 31
Recommended Maintenance Schedule(s) 31
Daily Maintenance Checklist 32
Service Interval Chart 33
Pre-Maintenance Procedures 33
Removing the Seat 33
Jacking the Machine 33
Lubrication 34
Greasing the Machine 34
Engine Maintenance 36
Servicing the Air Cleaner 36
Changing the Engine Oil and Filter 36
Adjusting the Throttle Control 37
Adjusting the Choke Control 37
Adjusting the Engine Speed 38
Replacing the Spark Plugs 38
Fuel System Maintenance 39
Replacing the Fuel Filter 39
Fuel Lines and Connections 39
Electrical System Maintenance 39
Servicing the Battery 39
Servicing the Fuses 40
Drive System Maintenance 40
Adjusting the Transmission for Neutral 40
Adjusting the Transport Speed 41
Adjusting the Mowing Speed 41
Brake Maintenance 42
Adjusting the Brakes 42
Controls System Maintenance 43
Adjusting the Cutting Unit Lift/Drop 43
Adjusting the Lift Cylinders 43
Hydraulic System Maintenance 44
Changing the Hydraulic Oil and Filter 44
Checking the Hydraulic Lines and Hoses 44
Cutting Unit Maintenance 45
Backlapping 45
Storage 46

Safety

This machine meets or exceeds CEN standard EN 836:1997, ISO standard 5395:2013, and ANSI B71.4-2012 specifications in effect at the time of production when 19.5 kg (43 lb) of ballast and the appropriate wheel weight kit is added to the rear wheel.

Note: The addition of attachments made by other manufacturers that do not meet American National Standards Institute certification will cause noncompliance of this machine.

Improper use or maintenance by the operator or owner can result in injury. To reduce the potential for injury, comply with these safety instructions and always pay attention to the safety alert symbol (Figure 2), which means Caution, Warning, or Danger—personal safety instruction. Failure to comply with the instruction may result in personal injury or death.

Safe Operating Practices

The following instructions are from CEN standard EN 836:1997, ISO standard5395:2013, and ANSI B71.4-2012.

Training

- Read the *Operator's Manual* and other training material. If the operator(s) or mechanic(s) can not read the manual it is the owner's responsibility to explain this material to them.
- Become familiar with the safe operation of the equipment, operator controls, and safety signs.
- All operators and mechanics should be trained. The owner is responsible for training the users.
- Never let children or untrained people operate or service the equipment. Local regulations may restrict the age of the operator.
- The owner/user can prevent and is responsible for accidents or injuries occurring to himself or herself, other people or property.

Preparation

- Evaluate the terrain to determine what accessories and attachments are needed to properly and safely perform the job. Only use accessories and attachments approved by the manufacturer.
- Wear appropriate clothing including substantial footwear, hard hat, safety glasses and ear protection. Long hair, loose clothing or jewelry may get tangled in moving parts.
- Inspect the area where the equipment is to be used and remove all objects such as rocks, toys and wire which can be thrown by the machine.
- Check that operator's presence controls, safety switches and shields are attached and functioning properly. Do not operate unless they are functioning properly.

Operation

- Never run an engine in an enclosed area.
- Only operate in good light, keeping away from holes and hidden hazards.
- Be sure all drives are in neutral and parking brake is engaged before starting engine. Only start engine from the operator's position. Use seat belts if provided.
- Slow down and use extra care on hillsides. Be sure to travel in the recommended direction on hillsides. Turf conditions can affect the machine's stability. Use caution while operating near drop-offs.
- Slow down and use caution when making turns and when changing directions on slopes.
- Never operate without guards securely in place. Be sure all interlocks are attached, adjusted, and functioning properly.
- Do not change the engine governor setting or overspeed the engine.
- Stop on level ground, lower the cutting units, disengage drives, engage parking brake (if provided), shut off engine before leaving the operator's position for any reason including emptying the grass baskets.
- Stop equipment and inspect the machine after striking objects or if an abnormal vibration occurs. Make necessary repairs before resuming operations.
- Keep hands and feet away from the cutting units.
- Look behind and down before backing up to be sure of a clear path.
- Never carry passengers and keep pets and bystanders away.
- Slow down and use caution when making turns and crossing roads and sidewalks. Stop reels if not mowing.
- Do not operate the mower under the influence of alcohol or drugs.
- Lightning can cause severe injury or death. If lightning is seen or thunder is heard in the area, do not operate the machine; seek shelter.
- Use care when loading or unloading the machine into a trailer or truck.
- Use care when approaching blind corners, shrubs, trees, or other objects that may obscure vision.

Rollover Protection System (ROPS) - Use and Maintenance

- The ROPS is an integral and effective safety device. Keep a folding ROPS in the raised and locked position and use the seat belt when operating the machine.
- Lower a ROPS temporarily only when absolutely necessary. Do not wear the seat belt when folded down.
- Be aware there is no rollover protection when a ROPS is in the down position.
- Be certain that the seat belt can be released quickly in the event of an emergency.
- Check the area to be mowed and never fold down a ROPS in areas where there are slopes, drop offs or water.
- Check carefully for overhead clearances (i.e. branches, doorways, electrical wires) before driving under any objects and do not contact them.
- Keep the ROPS in safe operating condition by periodically thoroughly inspecting for damage and keeping all mounting fasteners tight.
- Replace a damaged ROPS. Do not repair or revise.
- Do not remove the ROPS.
- Any alterations to a ROPS must be approved by the manufacturer.

Safe Handling of Fuels

- To avoid personal injury or property damage, use extreme care in handling gasoline. Gasoline is extremely flammable and the vapors are explosive.
- Extinguish all cigarettes, cigars, pipes, and other sources of ignition.
- Use only an approved fuel container.
- Never remove fuel cap or add fuel with the engine running.
- Allow engine to cool before refueling.
- Never refuel the machine indoors.
- Never store the machine or fuel container where there is an open flame, spark, or pilot light such as on a water heater or on other appliances.
- Never fill containers inside a vehicle or on a truck or trailer bed with a plastic liner. Always place containers on the ground away from your vehicle before filling.
- Remove equipment from the truck or trailer and refuel it on the ground. If this is not possible, then refuel such equipment with a portable container, rather than from a fuel dispenser nozzle.
- Keep the nozzle in contact with the rim of the fuel tank or container opening at all times until fueling is complete.
- Do not use a nozzle lock open device.
- If fuel is spilled on clothing, change clothing immediately.
- Never overfill fuel tank. Replace fuel cap and tighten securely.

Maintenance and Storage

- Disengage drives, lower the cutting units, set the parking brake, stop the engine, remove the key, and disconnect spark plug wire(s). Wait for all movement to stop before adjusting, cleaning, or repairing.
- Clean grass and debris from cutting units, drives, mufflers, and engine to help prevent fires. Clean up oil or fuel spillage.
- Let the engine cool before storing and do not store near flame.
- Shut off fuel while storing or transporting. Do not store fuel near flames or drain indoors.
- Park the machine on level ground.
- Never allow untrained personnel to service the machine.
- Use jack stands to support components when required.
- Carefully release pressure from components with stored energy.
- Disconnect the battery and remove the spark plug wire(s) before making any repairs. Disconnect the negative terminal first and the positive last. Reconnect positive first and negative last.
- Use care and wear gloves when checking the reels.
- Keep hands and feet away from moving parts. If possible, do not make adjustments with the engine running.
- Charge batteries in an open, well ventilated area, away from spark and flames. Unplug the charger before connecting or disconnecting it from the battery. Wear protective clothing and use insulated tools.
- Keep all parts in good working condition and all hardware and hydraulic fittings tightened. Replace all worn or damaged decals.

Hauling

- Use care when loading or unloading the machine into a trailer or truck.

- Use full width ramps for loading machine into trailer or truck.
- Tie the machine down securely using straps, chains, cable, or ropes. Both front and rear straps should be directed down and outward from the machine.

Toro Mower Safety

The following list contains safety information specific to Toro products or other safety information that you must know that is not included in the ANSI standards.

This product is capable of amputating hands and feet and throwing objects. Always follow all safety instructions to avoid serious injury or death.

Use of this product for purposes other than its intended use could prove dangerous to user and bystanders.

Operation

- Know how to stop the engine quickly.
- Always wear substantial shoes. Do not operate the machine while wearing sandals, tennis shoes, or sneakers. Wearing safety shoes and long pants is advisable and required by some local ordinances and insurance regulations.
- Handle fuel carefully. Wipe up any spills.
- Check the safety interlock switches daily for proper operation.
- Before attempting to start the engine, disengage all blade attachment clutches, shift into neutral, and engage the parking brake.
- Using the machine demands attention. To prevent loss of control:
  - Do not drive close to sand traps, ditches, creeks, or other hazards.
  - Reduce speed when making sharp turns. Avoid sudden stops and starts.
  - This machine is not designed or equipped for on-road use and is a “slow-moving vehicle.” If you must cross or travel on a public road, you should be aware of and comply with local regulations, such as required lights, slow moving vehicle signs, and reflectors.
  - Watch out for traffic when near or crossing roads. Always yield the right-of-way.
  - Apply the service brakes when going downhill to keep forward speed slow and to maintain control of the machine.
- The grass baskets must be in place during operation of the reels or thatchers for maximum safety. Shut the engine off before emptying the baskets.
- Raise the cutting units when driving from one work area to another.
- Do not touch the engine, muffler, or exhaust pipe while the engine is running or soon after it has stopped because these areas could be hot enough to cause burns.
- Stay clear of the rotating screen at the side of the engine to prevent direct contact with your body or clothing.
- If a cutting unit strikes a solid object or vibrates abnormally, stop immediately, turn the engine off, wait for all motion to stop, and inspect the machine for damage. A damaged reel or bedknife must be repaired or replaced before operation is continued.
- Before getting off of the seat, move the functional control lever to neutral (N), raise the cutting units and wait for the reels to stop spinning. Set the parking brake. Stop the engine and remove the key from the ignition switch.
- Traverse slopes carefully. Do not start or stop suddenly when traveling uphill or downhill.
- The operator must be skilled and trained in how to drive on hillsides. Failure to use caution on slopes or hills may cause loss of control and cause the machine to tip or roll, possibly resulting in personal injury or death.
- If the engine stalls or loses headway and cannot make it to the top of a slope, do not turn the machine around. Always back slowly, straight down the slope.
- When a person or animal appears unexpectedly in or near the mowing area, **stop mowing**. Careless operation, combined with terrain angles, ricochets, or improperly positioned guards can lead to thrown object injuries. Do not resume mowing until the area is cleared.
- Whenever the machine is left unattended, make sure the cutting units are fully raised, the reels are not spinning, the key is removed from the ignition switch, and the parking brake is set.

Maintenance and Storage

- Make sure all hydraulic line connectors are tight and all hydraulic hoses and lines are in good condition before applying pressure to the system.
- Keep your body and hands away from pin hole leaks or nozzles that eject hydraulic fluid under high pressure. Use paper or cardboard, not your hands, to search for leaks. Hydraulic fluid escaping under pressure can have sufficient force to penetrate the skin and cause serious injury.
- Before disconnecting or performing any work on the hydraulic system, all pressure in the system must be relieved by stopping the engine and

lowering the cutting units and attachments to the ground.

- Check all fuel lines for tightness and wear on a regular basis. Tighten or repair them as needed.
- If the engine must be running to perform a maintenance adjustment, keep hands, feet, clothing, and any parts of the body away from the cutting units, attachments, and any moving parts, especially the screen at the side of the engine. Keep everyone away.
- Do not overspeed the engine by changing governor settings. To ensure safety and accuracy, have an Authorized Toro Distributor check the maximum engine speed with a tachometer..
- The engine must be shut off before checking the oil or adding oil to the crankcase.
- If major repairs are ever needed or if assistance is desired, contact an Authorized Toro Distributor.
- To assure optimum performance and continued safety certification of the machine, use only genuine Toro replacement parts and accessories. Replacement parts and accessories made by other manufacturers could be dangerous, and such use could void the product warranty.

Sound Power Level

This unit has a guaranteed sound power level of 95 dBA, which includes an Uncertainty Value (K) of 1 dBA.

Sound power level was determined according to the procedures outlined in ISO 11094.

Sound Pressure Level

This unit has a sound pressure level at the operator's ear of 82 dBA, which includes an Uncertainty Value (K) of 1 dBA.

Sound pressure level was determined according to the procedures outlined in EN 836.

Vibration Level

Hand-Arm

Measured vibration level for right hand = 0.97 m/s^2

Measured vibration level for left hand = 1.11 m/s^2

Uncertainty Value (K) = 0.5 m/s^2

Measured values were determined according to the procedures outlined in EN 836.

Whole Body

Measured vibration level = 0.40 m/s^2

Uncertainty Value (K) = 0.5 m/s^2

Measured values were determined according to the procedures outlined in EN 836.

Safety and Instructional Decals

Safety decals and instructions are easily visible to the operator and are located near any area of potential danger. Replace any decal that is damaged or lost.

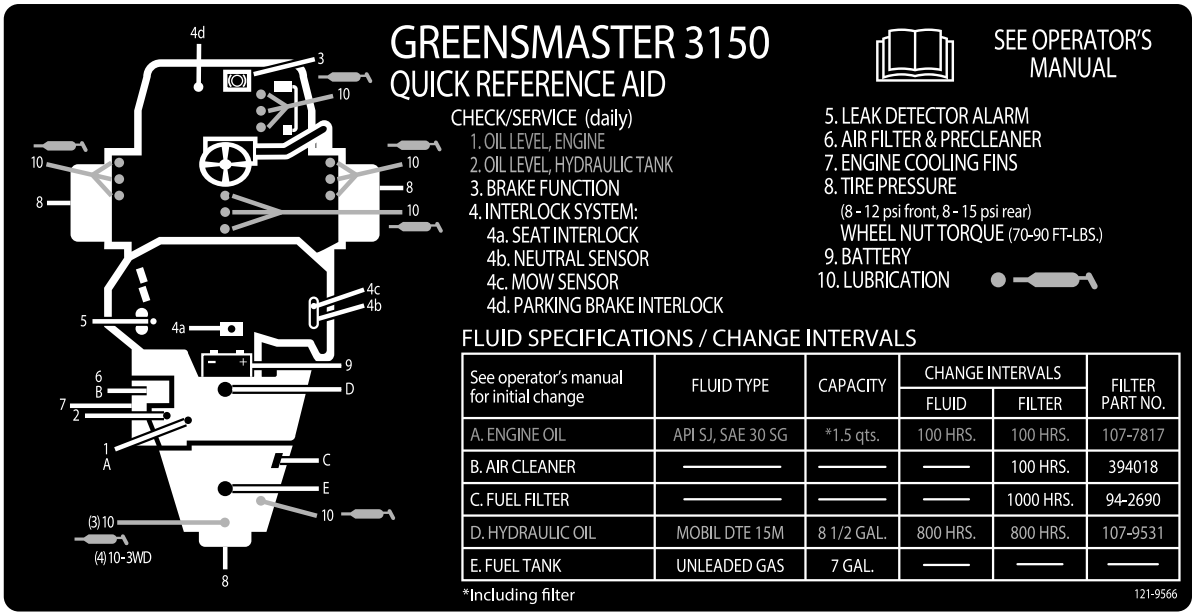

decal121-9566

121–9566

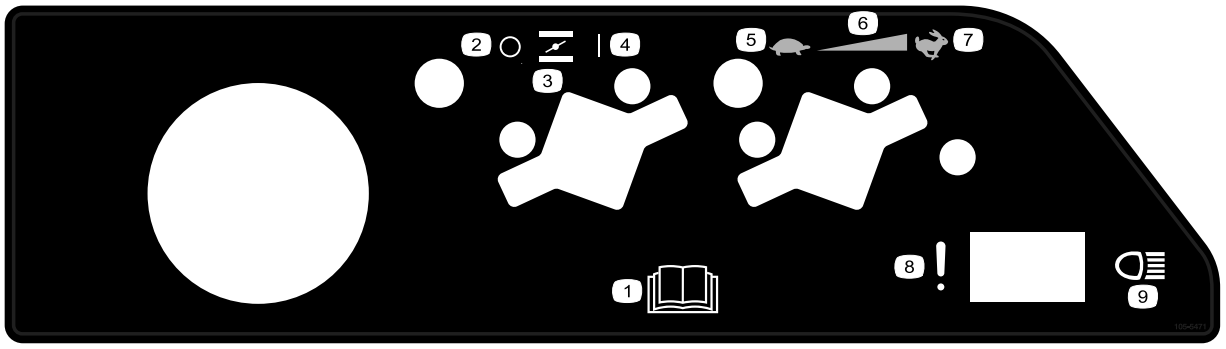

decal105-5471

105–5471

1. Read the *Operator's Manual.*
2. Off
3. Choke
4. On
5. Slow
6. Continuous variable setting
7. Fast
8. Failure/malfunction (Leal detector alarm test)
9. Headlights

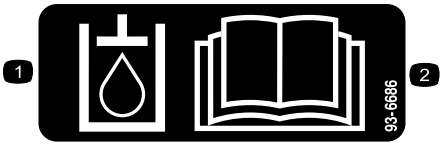

decal93-6686

93-6686

1. Hydraulic oil
2. Read the *Operator's Manual.*



decal117-2718

117–2718



decal93-9051

93–9051

1. Read the *Operator's Manual.*

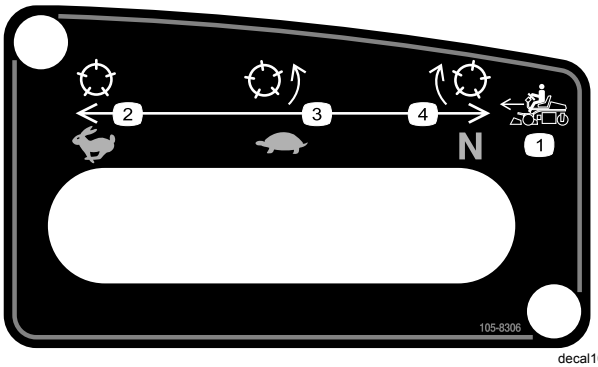

decal105-8306

105–8306

1. Forward machine speeds
2. Fast-use for transport
3. Slow-use for mowing
4. Neutral-use for backlapping.

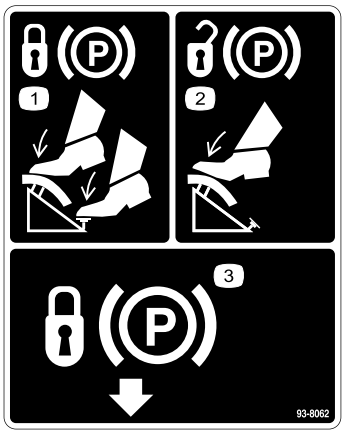

decal93-8062

93-8062

1. To lock the parking brake, press the brake pedal and the parking brake lock.
2. To unlock the parking brake, press the brake pedal.
3. Parking brake lock

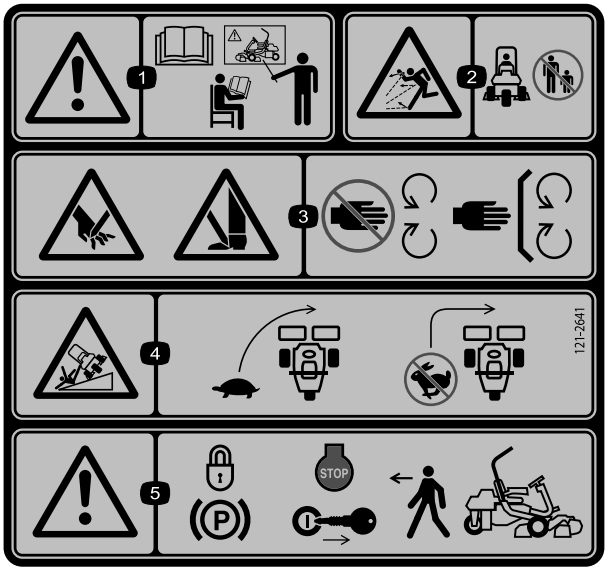

decal121-2641

121–2641

1. Warning—read the *Operator's Manual*, do not operate this machine unless you are trained.
2. Thrown object hazard—keep bystanders a safe distance from the machine.
3. Cutting/dismemberment hazard of hand or foot, mower blade—stay away from moving parts; keep all guards and shields in place.
4. Tipping hazard—slow machine before turning, do not turn at high speeds.
5. Warning—lock the parking brake, stop the engine and remove the ignition key before leaving the machine.

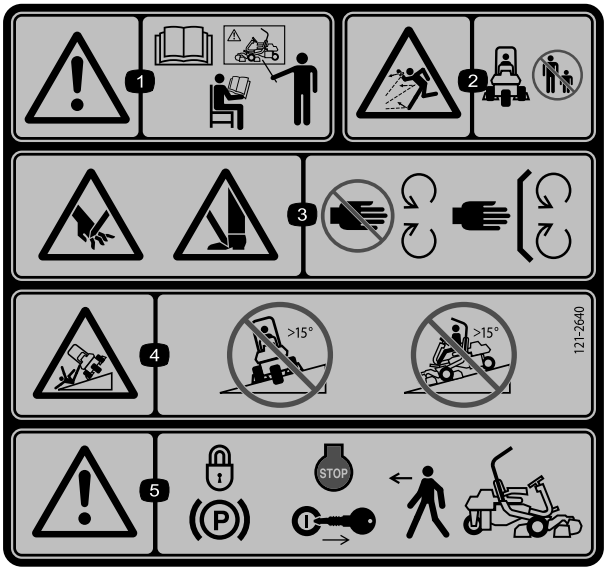

decal121-2640

121–2640

Replaces 121–2641 for CE.

1. Warning—read the *Operator's Manual*, do not operate this machine unless you are trained.
2. Thrown object hazard—keep bystanders a safe distance from the machine
3. Cutting/dismemberment hazard of hand or foot, mower blade—stay away from moving parts; keep all guards and shields in place.
4. Tipping hazard—do not drive across slopes greater than 15 degrees or down slopes greater than 15 degrees.
5. Warning—lock the parking brake, stop the engine and remove the ignition key before leaving the machine.

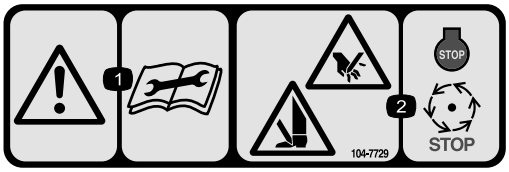

decal104-7729

104–7729

1. Warning—read the instructions before servicing or performing maintenance.
2. Cutting/dismemberment hazard; hand or foot—stop the engine and wait for moving parts to stop.



decalbatterysymbols

Battery Symbols

Some or all of these symbols are on your battery

1. Explosion hazard
2. No fire, open flame, or smoking.
3. Caustic liquid/chemical burn hazard
4. Wear eye protection
5. Read the *Operator's Manual.*
6. Keep bystanders a safe distance from the battery.
7. Wear eye protection; explosive gases can cause blindness and other injuries
8. Battery acid can cause blindness or severe burns.
9. Flush eyes immediately with water and get medical help fast.
10. Contains lead; do not discard.

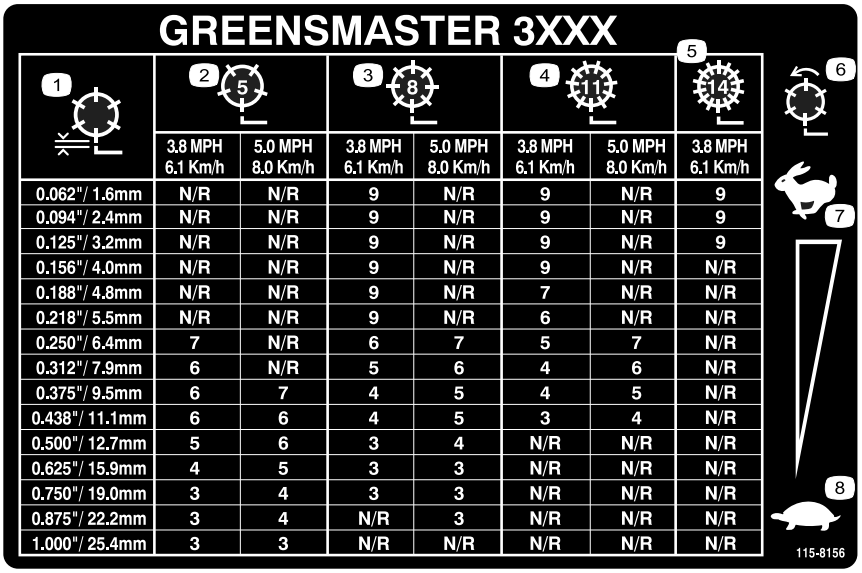

decal115-8156

115-8156

1. Reel height
2. 5 Blade cutting unit
3. 8 Blade cutting unit
4. 11 Blade cutting unit
5. 14 Blade cutting unit
6. Reel speed
7. Fast
8. Slow

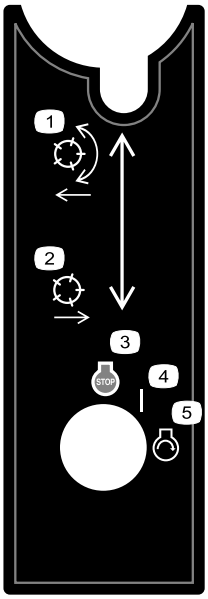

decal105-8305

105–8305

1. Lower and engage the reels.
2. Raise and disengage the reels.
3. Engine-stop
4. On
5. Engine-start

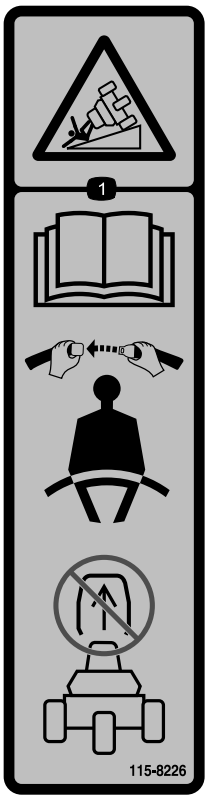

decal115-8226

115-8226

1. Tipping hazard—read the *Operator's manual*; always wear a seat belt when operating, do not remove the rollover protection system (ROPS).

Setup

Loose Parts

Use the chart below to verify that all parts have been shipped.

Procedure	Description	Qty.	Use
1	No parts required	–	Activate and charge the battery.
2	Bolt (1/4 x 5/8 inch) Nut (1/4 inch)	2 2	Install the battery.
3	Bolt (1/2 x 1.75 inch) Nut (1/2 inch)	8 8	Install the roll over protection system (ROPS).
4	Bolt (#10 x 5/8 inch) Jam nut (#10) Cutting unit Grass basket	1 1 3 3	Install the cutting units.
5	Rear weight kit, 100-6441 (purchase separately) Calcium chloride (purchase separately) Rear weight kit, 99-1645 (purchase separately if you have a 3-wheel drive kit installed)	1 19.5 kg (43 lb) 1	Add rear ballast and weight kit.
6	CE Guard Kit—Part No. 04440 (sold separately)	1	Install the CE guard kit.
7	Warning decal (121–2641)	1	Install EU decals, if required.

Media and Additional Parts

Description	Qty.	Use
Operator's Manual Engine Operator's Manual Operator Training Material	1 1 1	Read this information before operating the machine.
Parts Catalog	1	Identify and order service parts.
Pre-delivery Inspection Sheet Noise rating certificate Certificate of Quality Declaration of Conformity Emissions warranty	1 1 1 1 1	Read this compliance information.
Ignition keys	2	Start the machine.

1

Activating and Charging the Battery

No Parts Required

Procedure

Use only electrolyte (1.265 Specific Gravity) to fill battery initially.

⚠ WARNING

CALIFORNIA
Proposition 65 Warning

Battery posts, terminals, and related accessories contain lead and lead compounds, chemicals known to the State of California to cause cancer and reproductive harm. Wash hands after handling.

1. Remove the wing nuts, washers, and battery clamp and lift out the battery.

   Important: **Do not add electrolyte while the battery is in the machine. You could spill it, causing corrosion.**

2. Clean the top of the battery and remove the vent caps (Figure 3).

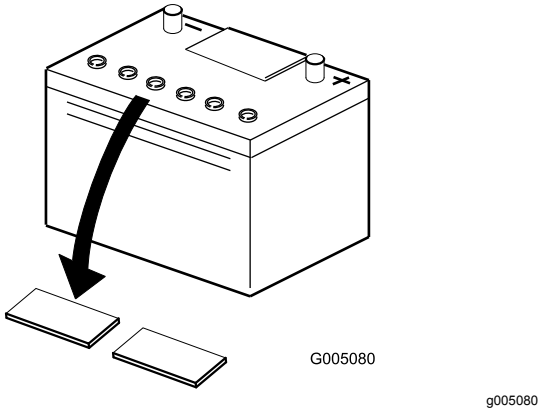

g005080

Figure 3

3. Carefully fill each cell with electrolyte until the plates are covered with about 6 mm (1/4 inch) of fluid (Figure 4).

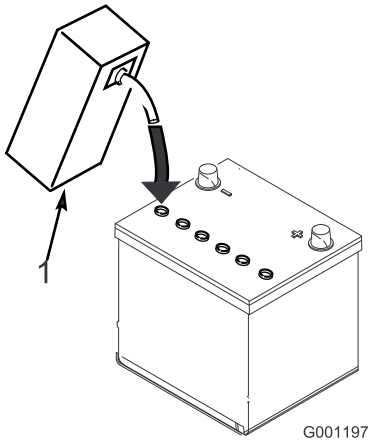

g001197

Figure 4

1. Electrolyte

4. Allow approximately 20 to 30 minutes for the electrolyte to soak into the plates. Fill as necessary to bring the electrolyte to within about 6 mm (1/4 inch) of the bottom of the fill well (Figure 4).

5. Connect a 2 to 4 amp battery charger to the battery posts. Charge the battery for 2 hours at 4 amps or for 4 hours at 2 amps until the specific gravity is 1.250 or higher and the temperature is at least 16° C (60° F) with all cells gassing freely.

⚠ WARNING

Charging the battery produces gasses that can explode.

Never smoke near the battery and keep sparks and flames away from battery.

6. When the battery is charged, disconnect the charger from the electrical outlet and battery posts.

   Note: After the battery has been activated, add only distilled water to replace normal loss, although maintenance-free batteries should not require water under normal operating conditions.

⚠ WARNING

Battery terminals or metal tools could short against metal tractor components causing sparks. Sparks can cause the battery gasses to explode, resulting in personal injury.

- **When removing or installing the battery, do not allow the battery terminals to touch any metal parts of the tractor.**
- **Do not allow metal tools to short between the battery terminals and metal parts of the tractor.**

⚠ WARNING

Failure to correctly activate the battery may result in battery gassing and/or premature battery failure.

7. Install the vent caps.

2

Installing the Battery

Parts needed for this procedure:

2	Bolt (1/4 x 5/8 inch)
2	Nut (1/4 inch)

Procedure

1. Mount the battery with the battery terminals toward the front of the machine.
2. Connect the positive battery cable (red) from the starter solenoid to the positive post (+) of the battery (Figure 5). Secure it with a wrench and coat the terminal with petroleum jelly. Make sure the cable will clear the seat, in the rear-most position, which could cause wear or damage to the cable.

⚠ WARNING

Battery terminals or metal tools could short against metal tractor components causing sparks. Sparks can cause the battery gasses to explode, resulting in personal injury.

- **When removing or installing the battery, do not allow the battery terminals to touch any metal parts of the tractor.**
- **Do not allow metal tools to short between the battery terminals and metal parts of the tractor.**

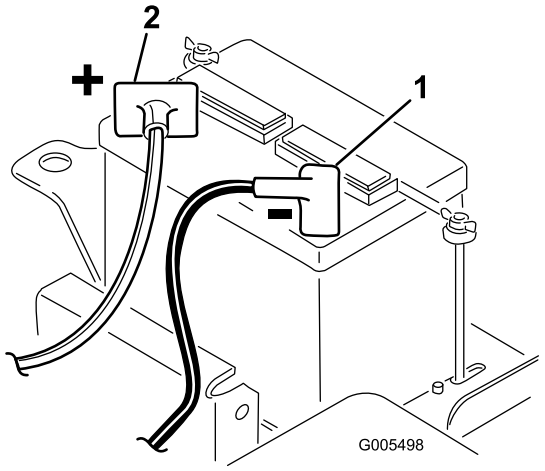

g005498

Figure 5

1. Negative (-)
2. Positive (+)

3. Connect the black ground cable (from the engine base) to the negative (-) post of the battery. Secure it with a wrench and coat the terminal with petroleum jelly.

⚠ WARNING

Incorrect battery cable routing could damage the tractor and cables causing sparks. Sparks can cause the battery gasses to explode, resulting in personal injury.

- **Always disconnect the negative (black) battery cable before disconnecting the positive (red) cable.**
- **Always connect the positive (red) battery cable before connecting the negative (black) cable.**

4. Install the battery clamp and washers and secure them with the wing nuts.

5. Place the terminal cover over the positive (+) battery post.

3

Installing the Roll Over Protection System (ROPS)

Parts needed for this procedure:

8	Bolt (1/2 x 1.75 inch)
8	Nut (1/2 inch)

Procedure

1. Remove the screws and nuts supporting the jack pad on the right side of the machine.
2. Lower the ROPS frame (Figure 6) onto the mounting brackets, aligning the mounting holes.
3. Secure each side of the roll bar and the previously removed jack pad to the mounting brackets with 8 screws (1/2-13 x 1.75 inch) and locknuts. Torque the fasteners to 91 to 115 N-m (67 to 85 ft-lb).

⚠ WARNING

The Rollover Protection System (ROPS) is an integral and effective safety device. Always use the seat belt with the roll bar.

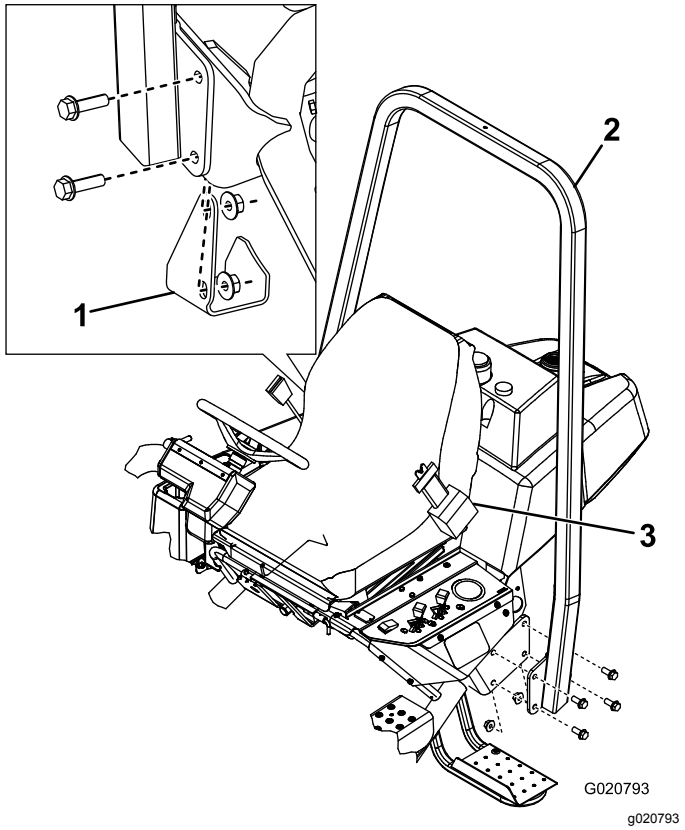

Figure 6

1. Jack pad
2. ROPS
3. Seat belt

4

Installing the Cutting Units (For cutting unit models 04610, 04611, 04616, 04618, 04619, and 04624 only)

Parts needed for this procedure:

1	Bolt (#10 x 5/8 inch)
1	Jam nut (#10)
3	Cutting unit
3	Grass basket

Procedure

Important: **Don't raise the suspension to the transport position when the reel motors are in the holders on the machine frame. Damage to the motors or hoses could result.**

Note: When sharpening, setting the height-of-cut or performing other maintenance procedures on the cutting units, store the cutting unit reel motors in the support tubes on the front of the frame to prevent damage to the hoses.

1. Remove the cutting units from the cartons. Assemble and adjust them as listed in the cutting unit *Operator's Manual* .
2. Slide the cutting unit under the pull frame while hooking the lift hook onto the lift arm (Figure 7).

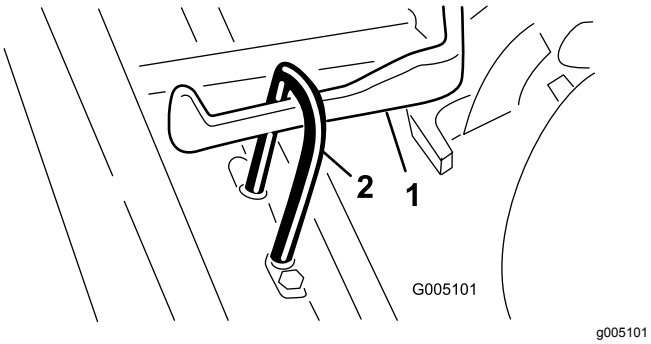

Figure 7

1. Lift arm
2. Lift hook

3. Slide the sleeve back on the ball joint receiver and hook the receiver onto the cutting unit ball stud. Release the sleeve so it slides over the stud and locks the assemblies together (Figure 8).

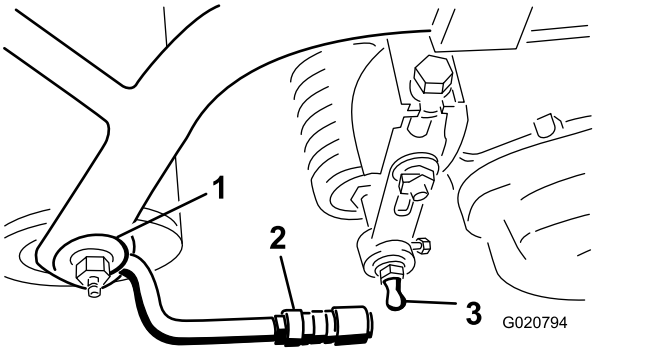

Figure 8

1. Pull frame
2. Pull arm
3. Ball stud

4. Mount the baskets on the pull frames, loosen the jam nuts on the pull arms, and adjust the ball sockets until there is 6 to 13 mm (1/4 to 1/2 inch) clearance between the lip of the basket and the reel blades or the front shield.

   Note: This prevents the basket from tipping the cutting unit forward, causing the lift roller to come off of the lift arm while in the mowing operation.

   Be sure the basket lip is equidistant from the reel blades all across each reel. If the basket is too close to the reel, it is possible for the reel to contact the basket when the cutting unit is raised off of the ground.

5. Align the sockets in the ball joints so the open side of the socket is centered towards the ball stud. Tighten the jam nuts to secure the sockets in position (Figure 9).

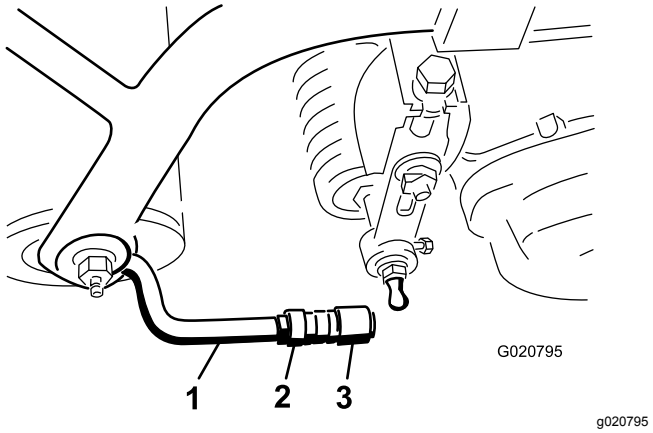

Figure 9

1. Pull arm
2. Jam nut
3. Ball joint

6. Ensure that there is approximately 13 mm (1/2 inch) of threads exposed on each reel drive motor mounting bolt (Figure 10).

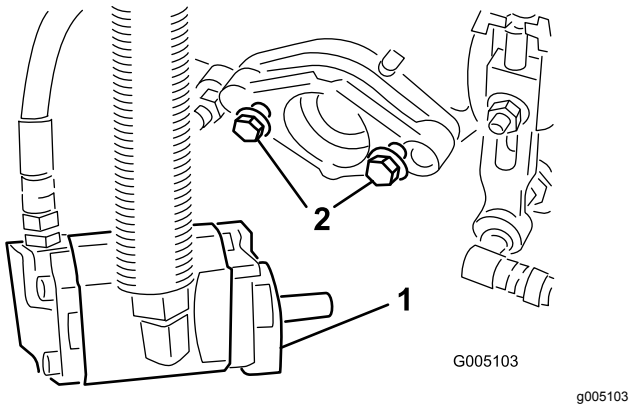

Figure 10

1. Mounting bolts
2. Drive motor

7. Coat the spline shaft of the motor with clean grease and install the motor by rotating the motor clockwise so that the motor flanges clear the studs. Rotate the motor counterclockwise until the flanges are encircling the studs.
8. **Tighten the mounting bolts** (Figure 10).

5

Adding Rear Ballast and Weight Kit

Parts needed for this procedure:

1	Rear weight kit, 100-6441 (purchase separately)
19.5 kg (43 lb)	Calcium chloride (purchase separately)
1	Rear weight kit, 99-1645 (purchase separately if you have a 3-wheel drive kit installed)

Procedure

This unit complies with the ANSI B71.4-2012 and EN 836 Standards when you equip it with rear weight kit 100-6441 and 19.5 kg (43 lb) of calcium chloride ballast is added to the rear wheel. If you install a 3-Wheel Drive kit, use rear weight kit 99-1645 instead of 100-6441.

Important: **If a puncture occurs in a tire with calcium chloride, remove the unit from the turf area as quickly as possible. To prevent possible damage to the turf, immediately soak the affected area with water.**

6

Installing the CE Guard Kit

Parts needed for this procedure:

1	CE Guard Kit—Part No. 04440 (sold separately)

Procedure

Install the CE guard kit; refer to the CE Guard Kit—Greensmaster 3150 2-Wheel Drive Traction Unit Installation Instructions.

7

Installing CE Decals

Parts needed for this procedure:

1	Warning decal (121–2641)

Procedure

If this machine will be used in the EU, affix the warning decal 121–2641 over warning decal (121–2640).

Product Overview

Controls

Brake Pedal

The brake pedal (Figure 11) actuates an automotive drum-type mechanical brake located at each traction wheel.

Parking Brake Button

Pressing the brake pedal to actuate the brake assembly, then pressing the small button indicated (Figure 11) will keep the brakes actuated for parking. Disengage it by pressing the brake pedal. Lock the parking brake before you leave the machine.

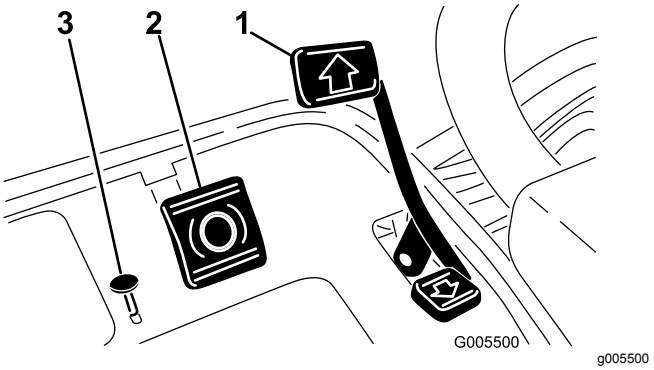

Figure 11

1. Traction pedal
2. Brake pedal
3. Parking brake button

Traction and Stopping Pedal

The traction pedal (Figure 11) has three functions: to make the machine move forward, to move it backward, and to stop the machine. Press the top of the pedal to move forward and the bottom of the pedal to move backward or to assist in stopping when moving forward. Also, allow the pedal to move to the neutral position to stop the machine. For operator comfort, do not rest the heel of your foot on reverse when operating forward (Figure 12).

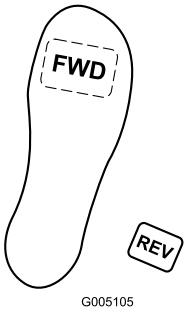

Figure 12

Throttle Control

The throttle control (Figure 13) gives the operator the ability to control the speed of the engine. Moving the throttle control toward the Fast position increases the engine rpm; moving the throttle control toward Slow will decrease the engine rpm.

Note: The engine cannot be stopped by the use of the throttle control.

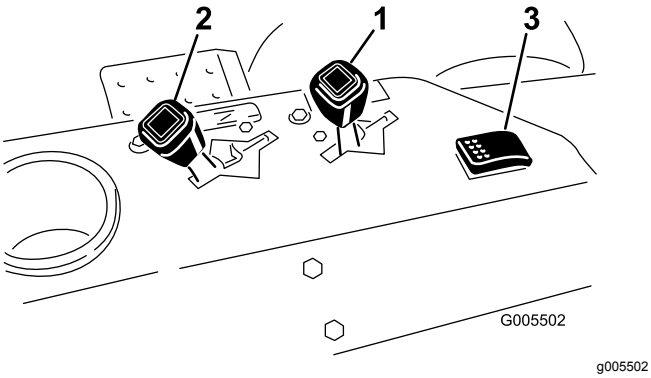

Figure 13

1. Throttle control
2. Choke control
3. Leak detector test/light switch

Choke

To start a cold engine, close the carburetor choke by moving the choke control (Figure 13) forward to the Closed position. After the engine starts, regulate the choke to keep the engine running smoothly. As soon as possible, open the choke by pulling it rearward to the Open position. A warm engine requires little or no choking.

Leak detector test/light switch

From the middle operating position, move the switch (Figure 13) rearward to check the operation of the leak detector alarm and time delay. Move the switch forward to operate the optional lights.

Hour Meter

The hour meter (located on the left control panel) indicates the total hours the machine has operated. It starts to function whenever the key switch is rotated to On.

Seat Adjusting Lever

This lever, on the left side of the seat (Figure 14), allows a 10 cm (4 inch) fore and aft adjustment of the seat.

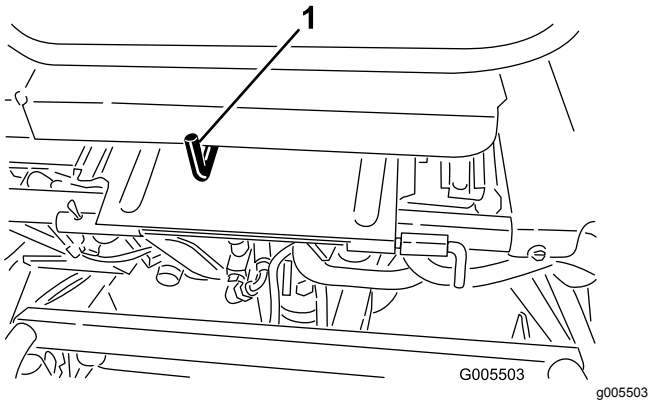

Figure 14

1. Seat adjustment lever

Raise/Lower Mow Control

Moving the control (Figure 15) forward during operation lowers the cutting units and starts the reels. Pull back on the control to stop the reels and raise the cutting units. During operation the reels can be stopped by pulling back on the control momentarily and releasing it. Restart the reels by moving the control forward.

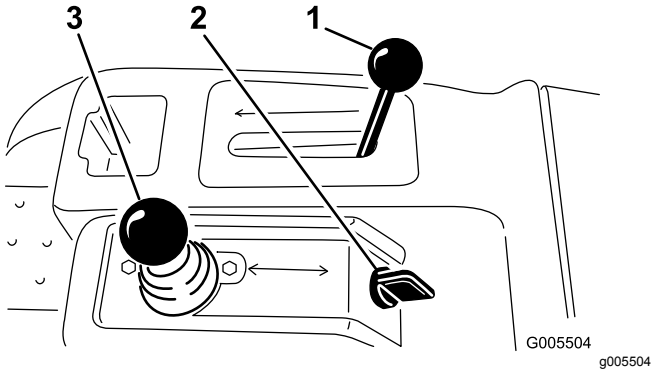

Figure 15

1. Functional control lever
2. Ignition switch
3. Raise/lower mow control

Functional Control Lever

The functional control lever (Figure 15) provides two traction selections plus a Neutral position. It is permissible to shift from mow to transport or transport to mow (not to neutral) while the machine is in motion. No damage will result.

- Rear Position-neutral and backlapping
- Middle Position-used for mowing operation
- Front Position-used for transport operation

Ignition Switch

Insert the key into the switch (Figure 15) and turn it clockwise as far as possible to the Start position to start the engine. Release the key as soon as the engine starts; the key will move to the On position. Turn the key counterclockwise to the Off position to stop the engine.

Steering Wheel Locking Lever

Rotate the lever (Figure 16) forward to loosen the adjustment, raise or lower steering wheel for operator comfort, then, rotate the lever rearward to tighten the adjustment.

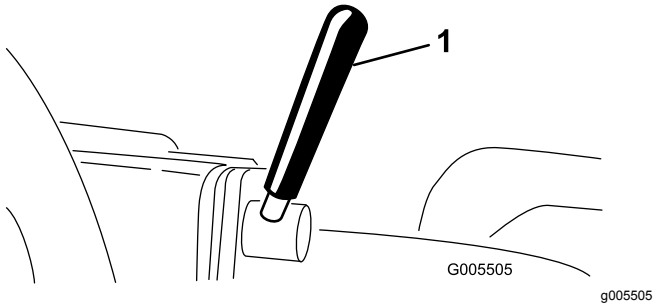

Figure 16

1. Steering wheel locking lever

Steering Arm Locking Knob

Loosen knob (Figure 17) until shoulder on knob clears the notches in steering arm. Raise or lower steering arm to desired height while aligning shoulder of knob with notch in steering arm. Tighten knob to lock adjustment.

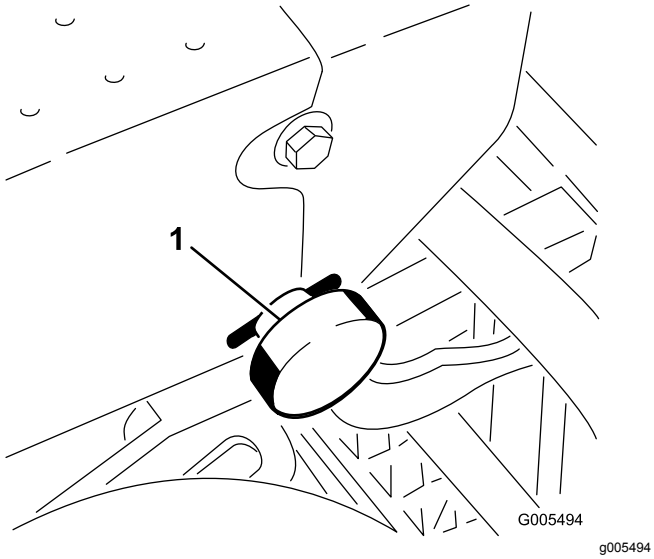

Figure 17

1. Steering arm locking knob

Fuel Shut-Off Valve

Close the fuel shut-off valve (Figure 18), under the fuel tank, when storing or transporting the machine on a truck or trailer.

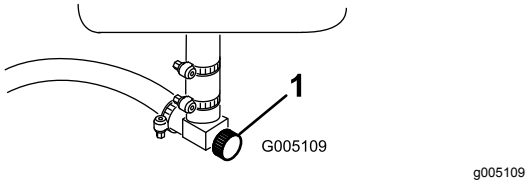

Figure 18

1. Fuel shut-off (under the fuel tank)

Backlap Lever

Use the backlap lever (Figure 19) in conjunction with the lower mow/raise control lever for backlapping the reels.

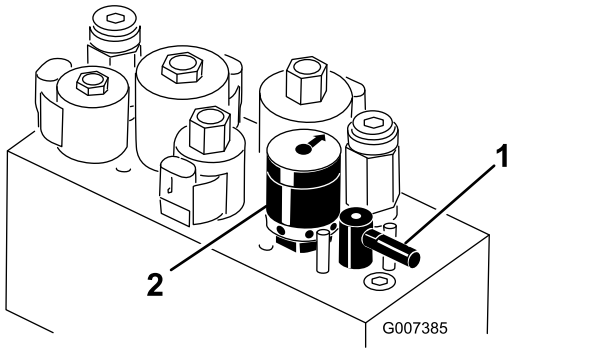

Figure 19

1. Backlap lever
2. Reel speed control

Reel Speed Control

Use the reel speed control (Figure 19) to adjust the rpm of the reel.

Specifications

Note: Specifications and design are subject to change without notice.

Overall Width w/reels	177 cm (69–3/4 inches)
Overall Length	228.6 cm (90 inches)
Overall Height	189 cm (74-1/2 inches)
Overall Weight w/11–blade cutting units	583 kg (1,374 lb)
Net Weight (dry)	493 kg (1,087 lb)
Width of Cut	149.9 cm (59 inches)
Wheel Tread	125.7 cm (49-1/2 inches)
Wheel Base	119.1 cm (46-7/8 inches)
Mow Speed (adjustable)	3.2–8 km/h (2–5 mph) approximately
Transport Speed	12.9 km/h (8.0 mph) approximately
Reverse Speed	4 km/h (2.5 mph)
Reel Speed (at 2,850 RPM engine speed)	1,845 rpm approximately

Attachments/Accessories

A selection of Toro approved attachments and accessories is available for use with the machine to enhance and expand its capabilities. Contact your Authorized Service Dealer or Distributor or go to www.Toro.com for a list of all approved attachments and accessories.

Operation

Note: Determine the left and right sides of the machine from the normal operating position.

Think Safety First

Please carefully read all of the safety instructions and symbols in the safety section. Knowing this information could help you or bystanders avoid injury.

The use of protective equipment, such as but not limited to, for eyes, ears, feet, and head is recommended.

⚠ CAUTION

Use your seat belt while operating this machine.

Checking the Engine Oil

The engine is shipped with 1.4 liters (1.5 quarts) (w/filter) of oil in the crankcase; however, the oil level must be checked before and after the engine is first started.

The engine uses any high-quality detergent oil having the American Petroleum Institute (API) service classification of SG, SH, or SJ or higher. The recommended viscosity (weight) is SAE 30.

1. Position the machine on a level surface.
2. Pull the dipstick out and wipe it with a clean rag. Push the dipstick into the tube and make sure it is seated fully (Figure 20).

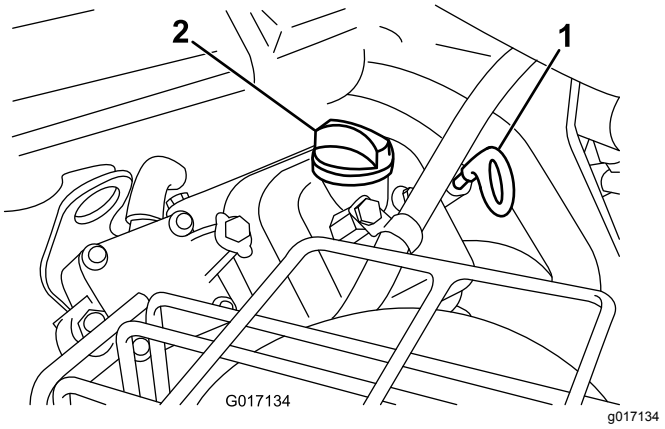

Figure 20

1. Dipstick
2. Filler cap

3. Pull the dipstick out of the tube and check the oil level.
4. If the oil level is low, remove the filler cap from the valve cover and pour oil into the opening in the valve cover until the oil level is up to the

Full mark on the dipstick. Add the oil slowly and check the level often during this process. **Do not overfill.**

Important: **Check the oil level every 8 operating hours or daily.**

5. Install the filler cap and dipstick firmly in place.

Filling the Fuel Tank

- **Fuel tank capacity:** 26.6 liters (7 U.S. gallons)
- **Recommended Fuel:**
  - For best results, use only clean, fresh (less than 30 days old), unleaded gasoline with an octane rating of 87 or higher ((R+M)/2 rating method).
  - **Ethanol**: Gasoline with up to 10% ethanol (gasohol) or 15% MTBE (methyl tertiary butyl ether) by volume is acceptable. Ethanol and MTBE are not the same. Gasoline with 15% ethanol (E15) by volume is not approved for use. **Never use gasoline that contains more than 10% ethanol by volume**, such as E15 (contains 15% ethanol), E20 (contains 20% ethanol), or E85 (contains up to 85% ethanol). Using unapproved gasoline may cause performance problems and/or engine damage which may not be covered under warranty.
  - **Do not** use gasoline containing methanol.
  - **Do not** store fuel either in the fuel tank or fuel containers over the winter unless a fuel stabilizer is used.
  - **Do not** add oil to gasoline.

Important: **Do not use fuel additives other than a fuel stabilizer/conditioner. Do not use fuel stabilizers with an alcohol base such as ethanol, methanol, or isopropanol.**

⚠ DANGER

In certain conditions, gasoline is extremely flammable and highly explosive. A fire or explosion from gasoline can burn you and others and can damage property.

- **Fill the fuel tank outdoors, in an open area, when the engine is cold. Wipe up any gasoline that spills.**
- **Never fill the fuel tank inside an enclosed trailer.**
- **Do not fill the fuel tank completely full. Add gasoline to the fuel tank until the level is 1 inch (25 mm) below the bottom of the filler neck. This empty space in the tank allows gasoline to expand.**
- **Never smoke when handling gasoline, and stay away from an open flame or where gasoline fumes may be ignited by a spark.**
- **Store gasoline in an approved container and keep it out of the reach of children. Never buy more than a 30-day supply of gasoline.**
- **Do not operate without entire exhaust system in place and in proper working condition.**

⚠ DANGER

In certain conditions during fueling, static electricity can be released causing a spark which can ignite the gasoline vapors. A fire or explosion from gasoline can burn you and others and can damage property.

- **Always place gasoline containers on the ground away from your vehicle before filling.**
- **Do not fill gasoline containers inside a vehicle or on a truck or trailer bed because interior carpets or plastic truck bed liners may insulate the container and slow the loss of any static charge.**
- **When practical, remove gas-powered equipment from the truck or trailer and refuel the equipment with its wheels on the ground.**
- **If this is not possible, then refuel such equipment on a truck or trailer from a portable container, rather than from a gasoline dispenser nozzle.**
- **If a gasoline dispenser nozzle must be used, keep the nozzle in contact with the rim of the fuel tank or container opening at all times until fueling is complete.**

1. Clean around the fuel tank cap and remove it (Figure 21).

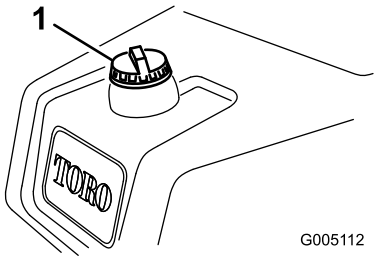

g005112

Figure 21

1. Fuel tank cap

2. Add unleaded regular gasoline to the fuel tank until the level is 25 mm (1 inch) below the bottom of the filler neck.

   This space in the tank allows gasoline to expand. **Do not fill the fuel tank completely full.**

3. Install the fuel tank cap securely. Wipe up any gasoline that may have spilled.

Checking the Hydraulic Fluid Level

The hydraulic fluid reservoir is filled at the factory with approximately 32.2 l (8.5 U.S. gallons) of high quality hydraulic fluid. Check the level of the hydraulic fluid before the engine is first started and daily thereafter. The recommended replacement fluid is as follows:

Toro Premium All Season Hydraulic Fluid (Available in 5 gallon pails or 55 gallon drums. See parts catalog or Toro distributor for part numbers.)

Alternate fluids: If the Toro fluid is not available, other fluids may be used provided they meet all the following material properties and industry specifications. We do not recommend the use of synthetic fluid. Consult with your lubricant distributor to identify a satisfactory product

Note: Toro will not assume responsibility for damage caused by improper substitutions, so use only products from reputable manufacturers who will stand behind their recommendation.

High Viscosity Index/Low Pour Point Anti-wear Hydraulic Fluid, ISO VG 46

Material Properties:

Viscosity, ASTM D445	cSt @ 40°C 44 to 50 cSt @ 100°C 7.9 to 8.5
Viscosity Index ASTM D2270	140 to 160
Pour Point, ASTM D97	-34°F to -49°F

Industry Specifications:

Vickers I-286-S (Quality Level), Vickers M-2950-S (Quality Level), Denison HF-0

Important: **The ISO VG 46 Multigrade fluid has been found to offer optimal performance in a wide range of temperature conditions. For operation in consistently high ambient temperatures, 18° C (65° F) to 49° C (120° F), ISO VG 68 hydraulic fluid may offer improved performance.**

Premium Biodegradable Hydraulic Fluid-Mobil EAL EnviroSyn 46H

Important: **Mobil EAL EnviroSyn 46H is the only synthetic biodegradable fluid approved by Toro. This fluid is compatible with the elastomers used in Toro hydraulic systems and is suitable for a wide-range of temperature conditions. This fluid is compatible with conventional mineral oils, but for maximum biodegradability and performance the hydraulic system should be thoroughly flushed of conventional fluid. The oil is available in 19 l (5 gallon) containers or 55 gallon drums from your Mobil Distributor.**

Note: Many hydraulic fluids are almost colorless, making it difficult to spot leaks. A red dye additive for the hydraulic system oil is available in 20 ml (2/3 oz) bottles. One bottle is sufficient for 15-22 l (4-6

gallons) of hydraulic oil. Order part no. 44-2500 from your authorized Toro distributor. **This red dye is not recommended for use with biodegradable fluids. Use food coloring.**

Important: **Regardless of the hydraulic fluid type used, any traction unit used for off green applications, verticutting or used during ambient temperatures above 29° C (85° F) should have Oil Cooler Kit, Part No. 105-8339, installed.**

1. Position the machine on a level surface. Make sure the machine has cooled down so the oil is cold. Check the oil level by viewing the sight window on the side of the auxiliary oil tank (Figure 22). If the oil level is between the two marks on the sight window, the oil level is sufficient.
2. If the oil level is below the bottom mark in the sight window, remove the cap from the hydraulic oil tank and slowly fill the tank with the appropriate high quality hydraulic fluid until the level is between the two marks on the sight window. Do not mix oils. Install the cap.

   Important: **To prevent system contamination, clean the top of the hydraulic oil containers before puncturing them. Ensure that the pour spout and funnel are clean.**

   Note: Make a close visual inspection of the hydraulic components. Inspect them for leaks, loose fasteners, missing parts, improperly routed lines, etc. Make any corrections necessary.

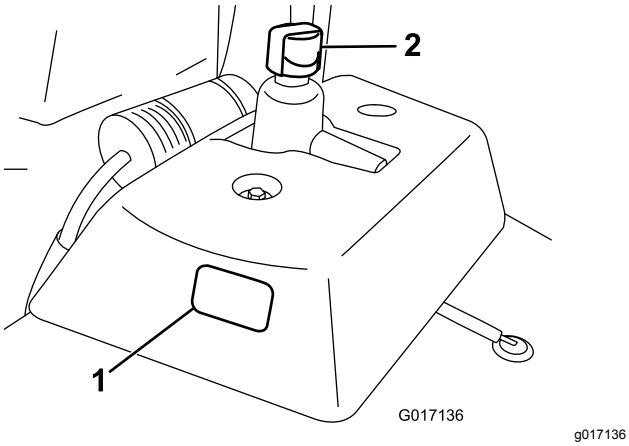

Figure 22

1. Sight window
2. Hydraulic tank cap

Checking the Tire Pressure

The tires are over-inflated at the factory for shipping purposes. Reduce the pressure to the proper levels before starting the unit.

Vary the tire pressure for the front wheels, depending upon your turf conditions, from a minimum of 55 kPa to a maximum of 83 kPa (8 to 12 psi).

Vary the tire pressure for the rear wheel from a minimum of 55 kPa to a maximum of 103 kPa (8 to 15 psi).

Checking the Torque of the Wheel Nuts

⚠ WARNING

Failure to maintain proper torque of the wheel nuts could result in personal injury.

Torque the wheel nuts to 95 to 122 N-m (70-90 ft-lb) after 1-4 hours of operation and again after 10 hours of operation. Torque every 200 hours thereafter.

Break-in Period

Refer to the Engine Manual supplied with the machine for oil change and maintenance procedures recommended during the break-in period.

Only 8 hours of mowing operation is required for the break-in period.

Since the first hours of operation are critical to future dependability of the machine, monitor its functions and performance closely so that minor difficulties, which could lead to major problems, are noted and can be corrected. Inspect the machine frequently during break-in for signs of oil leakage, loose fasteners, or any other malfunction.

To ensure optimum performance of the brake system, burnish (break-in) the brakes before using the machine. To burnish the brakes, firmly apply the brakes and drive the machine at mowing speed until the brakes are hot, as indicated by their smell. An adjustment to the brakes may be required after break-in; refer to Adjusting the Brakes (page 42).

Starting the Engine

Note: Inspect the area beneath the mowers to be certain they are clear of debris.

1. Sit on the seat, lock the parking brake, disengage the raise/lower mow control and move the functional control lever to Neutral.
2. Remove your foot from the traction pedal and make sure the pedal is in the Neutral position.
3. Move the choke lever to the closed position (only when starting a cold engine) and the throttle lever to the half throttle position.
4. Insert and rotate the ignition key clockwise until the engine starts. After the engine starts, regulate the choke to keep the engine running smoothly. As soon as possible, open the choke by pulling it rearward to the Off position. A warm engine requires little or no choking.
5. Check the machine out with the following procedures after the engine has started:

   A. Move the throttle control to the Fast position and momentarily engage the reels by moving the raise/lower mow control lever forward. The cutting units should drop and all the reels should turn.

   B. Move the raise/lower mow control lever rearward. The cutting reels should stop and the cutting units should raise to the full transport position.

      Important: **Stop the engine. Check the lip of each basket to be sure it is not in contact with the reel during operation. Adjust the pull arms if contact is noted; refer to 4 Installing the Cutting Units (For cutting unit models 04610, 04611, 04616, 04618, 04619, and 04624 only) (page 15).**

   C. Depress the brake pedal to keep the machine from moving, and operate the traction pedal through the forward and reverse positions.

   D. Continue the above procedure for 1-2 minutes. Neutralize the functional control lever, lock the parking brake, and turn the engine off.

   E. Check for oil leaks. If oil leaks appear, check the tightness of the hydraulic fittings. If oil leaks continue to appear, contact your local Toro Distributor for assistance and, if necessary, replacement parts.

      Important: **A trace of oil on the motor or wheel seals is normal. Seals require a small amount of lubrication to perform properly.**

Note: Since the machine is new and the bearings and reels are tight, it is necessary to use the Fast throttle control position for this check. A fast throttle setting may not be required after the break-in period.

Checking the Safety Interlock System

⚠ CAUTION

If the safety interlock switches are disconnected or damaged the machine could operate unexpectedly causing personal injury.

- **Do not tamper with the interlock switches.**
- **Check the operation of the interlock switches daily and replace any damaged switches before operating the machine.**

The purpose of the safety interlock system is to prevent operation of the machine where there is possible injury to the operator or the machine.

The safety interlock system prevents the engine from starting unless:

- The traction pedal is in neutral.
- The functional control lever is in neutral.

The safety interlock system prevents the machine from moving unless:

- The parking brake is off.
- The operator is seated.
- The functional control lever is in Mow or Transport.

The safety interlock system prevents the reels from operating unless the functional control lever is in the Mow position.

Perform the following system checks daily to be sure the interlock system is operating correctly:

1. Sit on the seat, move the traction pedal to Neutral, move the functional control lever to Neutral, and engage the parking brake. Try to depress the traction pedal. The pedal should not depress, which means that the interlock system is operating correctly. Correct the problem if it is not operating properly.
2. Sit on the seat, move the traction pedal to Neutral, move the functional control lever to Neutral, and engage the parking brake. Move the functional control lever to mow or transport and try to start the engine. The engine should not crank, which means that the interlock system

is operating correctly. Correct the problem if it is not operating properly.

3. Sit on the seat, move the traction pedal to Neutral, move the functional control lever to Neutral, and engage the parking brake. Start the engine and move the functional control lever to mow or transport. The engine should kill, which means that the interlock system is operating correctly. Correct the problem if it is not operating properly.
4. Sit on the seat, move the traction pedal to Neutral, move the functional control lever to Neutral, and engage the parking brake. Start the engine. Release the parking brake, move the functional control lever to mow, and rise from the seat. The engine should kill, which means that the interlock system is operating correctly. Correct the problem if it is not operating properly.
5. Sit on the seat, move the traction pedal to Neutral, move the functional control lever to Neutral, and engage the parking brake. Start the engine. Move the raise/lower mow control forward to lower the cutting units. The cutting units should not start rotating. If they do, the interlock system is not operating correctly. Correct the problem.

Checking the Leak Detector

The leak detector system is designed to assist in early detection of hydraulic oil system leaks. If the oil level in the main hydraulic reservoir, is lowered by 118-177 ml (4 to 6 ounces), the float switch in the tank will close. After a one second delay, the alarm will sound, alerting the operator (Figure 25). Expansion of oil, due to normal heating during machine operation, will cause the oil to transfer into the auxiliary oil reservoir. The oil is allowed to return to the main tank when the ignition switch is turned off.

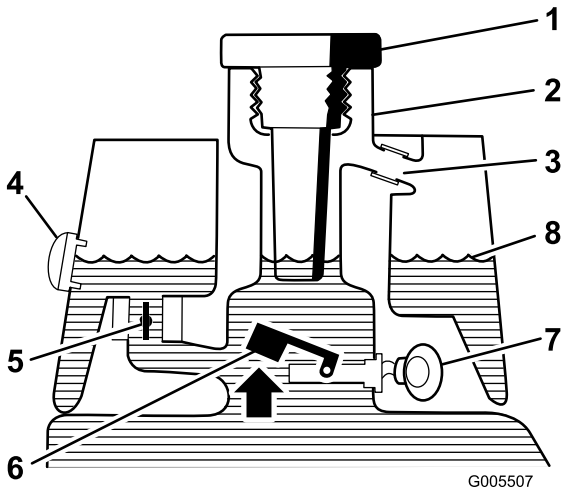

Figure 23

Before Starting (oil cold)

1. Filler cap
2. Filler neck
3. Overflow tube
4. Sight window
5. Solenoid return valve open
6. Float raised switch open
7. No sound
8. Fluid level (cold)

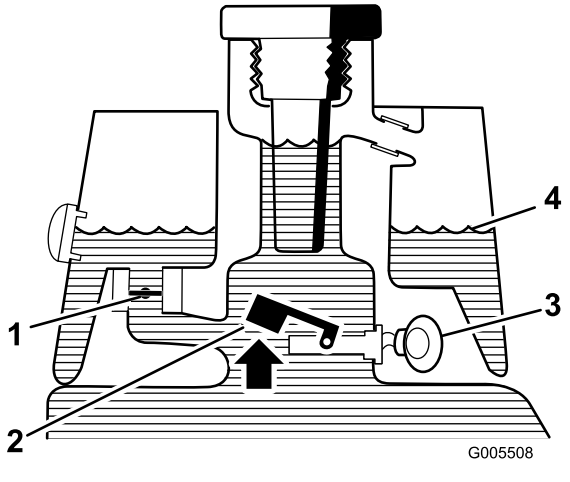

Figure 24

Normal Operation (oil warm)

1. Solenoid return valve closed
2. Float raised switch open
3. Warning buzzer
4. Fluid level (warm)

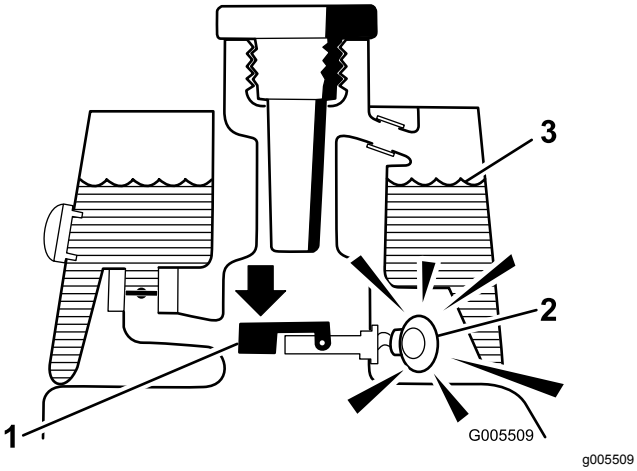

Figure 25
Leak Alert!

1. Float down switch closed Fluid level down 118–177 ml (4 to 6 ounces)
2. Warning buzzer
3. Fluid level (warm)

Checking the System Operation

1. With ignition switch in the On position, move the leak detector switch rearward and hold. After the one-second time delay elapses the alarm should sound.
2. Release the leak detector switch.

Checking the Leak Detector System Operation

1. Move the ignition switch to the On position. Do not start the engine.
2. Remove the hydraulic tank cap and strainer from the neck of the tank.
3. Insert a clean rod or screwdriver into the tank neck and gently push down on the switch float (Figure 26). The alarm should sound after the one-second delay.

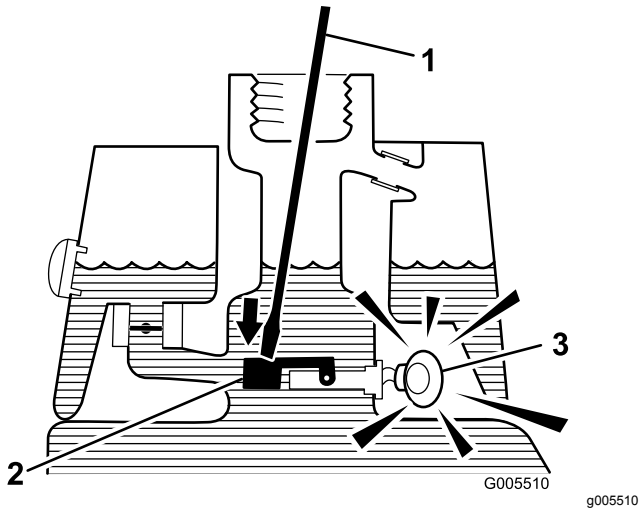

Figure 26

1. Clean rod or screwdriver
2. Press down on switch
3. Warning buzzer

4. Release the float. The alarm should stop sounding.
5. Install the strainer screen and hydraulic tank cap. Move the ignition switch to the Off position.

Setting the Reel Speed

To achieve a consistent, high quality-of-cut and a uniform after cut appearance, it is important that the reel speed control (located on the manifold block under seat) be correctly set.

Adjust the reel speed control as follows:

1. Select the height-of-cut at which the cutting units are set.
2. Choose the desired ground speed best suited for conditions.
3. Using the appropriate graph (See Figure 27) for 8, 11 or 14 blade cutting units, determine the proper reel speed setting.

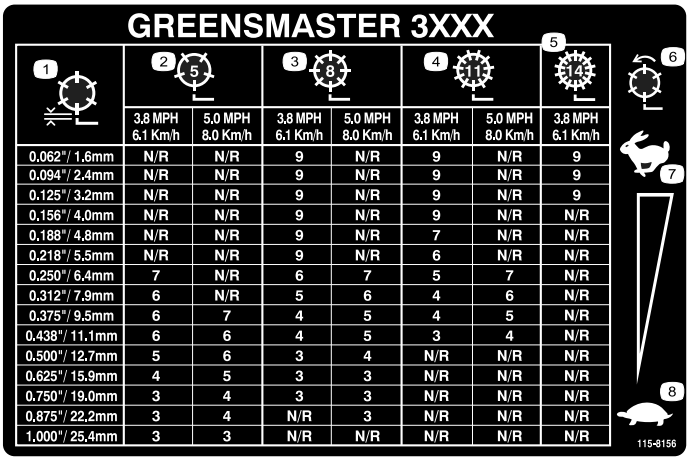

decal115-8156

Figure 27

1. Reel height
2. 5 Blade cutting unit
3. 8 Blade cutting unit
4. 11 Blade cutting unit
5. 14 Blade cutting unit
6. Reel speed
7. Fast
8. Slow

4. To set the reel speed, rotate the knob (Figure 28) until the indicator arrows are in line with the number designating desired setting.

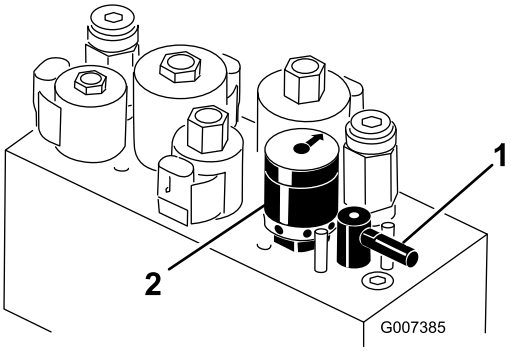

g007385

Figure 28

1. Backlap lever
2. Reel speed control

Note: Reel speed can be increased or decreased to compensate for turf conditions.

Preparing the Machine for Mowing

To assist in aligning the machine for successive cutting passes, it is suggested the following be done to the No. 2 and No. 3 cutting unit baskets:

1. Measure in approximately 12.7 cm (5 inches) from the outer edge of each basket.
2. Either place a strip of white tape or paint a line onto each basket paralleling the outer edge of each basket (Figure 29).

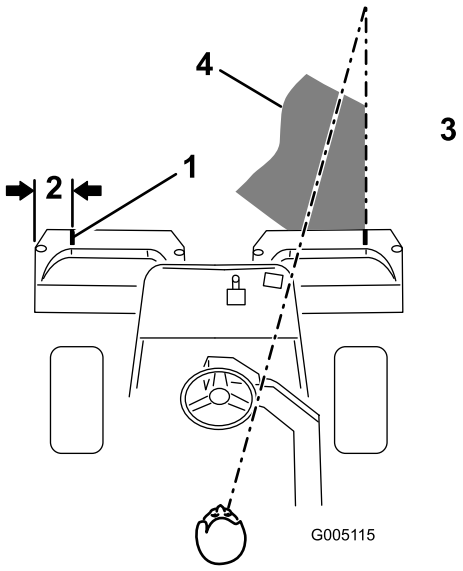

g005115

Figure 29

1. Alignment strip
2. Approximately 12.7 cm (5 inches)
3. Cut grass on right
4. Keep focal spot 1.8-3 m (6-10 ft) ahead of the machine.

Training Period

Before mowing greens with the machine, it is recommended that you find a clear area and practice starting and stopping, raising and lowering the cutting units, turning, etc. This training period will be beneficial to the operator in gaining confidence in the performance of the machine.

Before Mowing

Inspect the green for debris, remove the flag from the cup, and determine the best direction to mow. Base the direction to mow on the previous mowing direction. Always mow in an alternate pattern from the previous mowing so that the grass blades will be less apt to lay down and therefore be difficult to trap between the reel blades and bedknife.

Mowing

1. Approach the green with the functional control lever in the Mow position and the throttle at full speed. Start on one edge of the green so the ribbon procedure of cutting may be used. This holds compaction to a minimum and leaves a neat, attractive pattern on the greens.
2. Actuate the raise/lower mow lever as the front edge of the grass baskets cross the outer edge of the green. This procedure drops the cutting units to the turf and starts the reels.

Important: **Familiarize yourself with the fact that the No. 1 cutting unit reel is delayed and therefore, you should practice to try to gain the required timing necessary to minimize the cleanup mowing operation.**

3. Overlap a minimal amount with the previous cut on return passes. To assist in maintaining a straight line across the green and keep the machine an equal distance from the edge of the previous cut, establish an imaginary sight line approximately 1.8 to 3 m (6 to 10 ft) ahead of the machine to the edge of the uncut portion of the green (Figure 29 and Figure 30). Some find it useful to include the outer edge of the steering wheel as part of the sight line; i.e. keep the steering wheel edge aligned with a point that is always kept the same distance away from the front of the machine (Figure 29 and Figure 30).
4. As the front of the baskets cross the edge of the green, move the raise/lower mow lever rearward. This will stop the reels and lift the cutting units. Timing of this procedure is important, so the mowers do not cut into the fringe area. However, as much of the green as possible should be cut to minimize the amount of grass left to mow around the outer periphery.
5. Cut down on operating time and ease lineup for the next pass by momentarily turning the machine in the opposite direction, then turning in the direction of the uncut portion; i.e., if intending to turn right, first swing slightly left, then right. This will assist in getting the machine more quickly aligned for the next pass. Follow the same procedure for turning in the opposite direction. It is a good practice to try to make as short of a turn as possible. However, turn in a wider arc during warmer weather to minimize the possibility of bruising the turf.

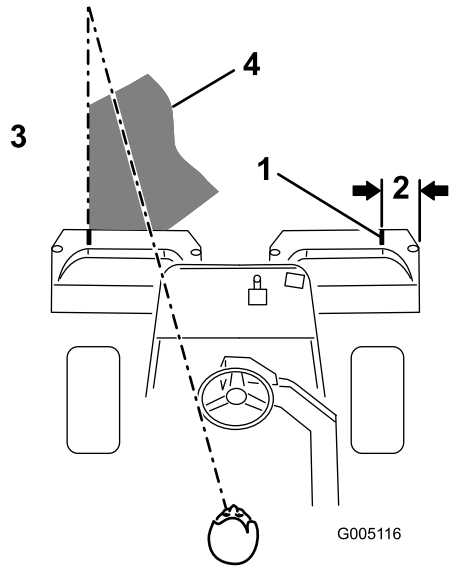

g005116

Figure 30

1. Alignment strip
2. Approximately 12.7 cm (5 inches)
3. Cut grass on left
4. Keep focal spot 1.8-3 m (6-10 ft) ahead of the machine.

Note: Due to the nature of the power steering system, the steering wheel will not return to its original position after a turn has been completed.

Important: **The machine should never be stopped on a green with the cutting unit reels operating as damage to the turf may result. Stopping on a wet green with the machine may leave marks or indentations from the wheels.**

6. If the leak detector alarm sounds while cutting on a green, immediately raise the cutting units, drive directly off of the green and stop the machine in an area away from the green. Determine the cause of the alarm and correct the problem.
7. Finish cutting the green by mowing the outer periphery. Be sure to change the direction of cutting from the previous mowing. Always keep weather and turf conditions in mind and be sure to change the direction of mowing from the previous cutting. Replace the flag.
8. Empty the grass baskets of all clippings before transporting to the next green. Heavy wet clippings place an undue strain on the baskets and will add unnecessary weight to the machine, thereby increasing the load on the engine, hydraulic system, brakes, etc.

Leak Detector Operation

The leak detector alarm may sound for one of the following reasons:

- A leak of 118-177 ml (4 to 6 ounces) has occurred.
- The oil level in the main reservoir is reduced by 118–177 ml (4 to 6 ounces) due to contraction of the oil by cooling.

If the alarm sounds, it should be turned off as quickly as possible and inspected for leaks. If the alarm sounds while operating on a green it may be appropriate to drive off the green first. The source of the leak should be determined and repaired before continuing operation. If a leak is not found, and a false leak is suspected, move the ignition switch to the Off position and allow the machine to stand for 1-2 minutes to allow the oil levels to stabilize. Then start the machine and operate in a non-sensitive area to confirm no leak exists.

False alarms, due to oil contraction, may be caused by extended idling of the machine after normal operation. A false alarm may also occur, if the machine is worked at a reduced workload after an extended period of a heavier workload. To avoid false alarms, turn the machine off rather than idling for extended periods.

Transport Operation

Make sure the cutting units are in the full up position. Set the shift selector in No. 2 if conditions will permit faster ground speed. Shift to No. 1 and operate at slower ground speeds in rough or hilly areas. Use the brakes to slow the machine while going down steep hills to avoid loss of control. Always approach rough areas at a reduced speed (shift selector in No. 1), and cross severe undulations carefully. Familiarize yourself with the width of the machine. Do not attempt to pass between objects that are close together so that costly damage and down time can be prevented.

Inspection and Cleanup After Mowing

At the completion of the mowing operation, thoroughly wash the machine with a garden hose without a nozzle so excessive water pressure will not cause contamination and damage to the seals and bearings. After cleaning, inspect the machine for possible hydraulic fluid leaks, damage or wear to hydraulic and mechanical components, and the cutting units for sharpness. Also, lubricate brake shaft assembly with SAE 30 oil or spray lubricant to deter corrosion and help keep the machine performing satisfactorily during the next mowing operation.

Towing the Traction Unit

In case of an emergency the machine can be towed for a short distance (less than 0.4 km (1/4 mile)). However, Toro does not recommend this as standard procedure.

Important: **Do not tow the machine faster than 3-5 km/h (2-3 mph) because the drive system may be damaged. If the machine must be moved a considerable distance, transport it on a truck or trailer.**

1. Locate the bypass valve on the pump and rotate it so that the slot is vertical (Figure 31).

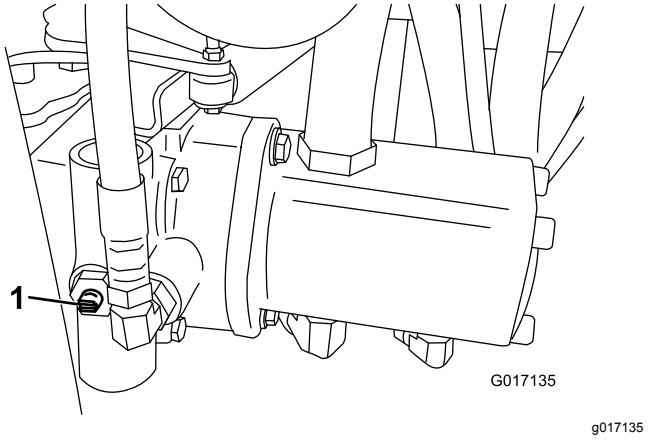

Figure 31

1. Bypass valve-slot shown in closed (horizontal) position

2. Before starting the engine, close the bypass valve by rotating it so that the slot is horizontal (Figure 31). Do not start the engine when the valve is open.

Maintenance

Note: Determine the left and right sides of the machine from the normal operating position.

Note: Looking for an *Electrical Schematic* or *Hydraulic Schematic* for your machine? Download a free copy of the schematic by visiting www.Toro.com and searching for your machine from the Manuals link on the home page.

Important: **Refer to your engine *Operator's Manual* for additional maintenance procedures.**

⚠ CAUTION

If you leave the key in the ignition switch, someone could accidently start the engine and seriously injure you or other bystanders.

Remove the key from the ignition and disconnect the wire from the spark plug before you do any maintenance. Set the wire aside so that it does not accidentally contact the spark plug.

Recommended Maintenance Schedule(s)

Maintenance Service Interval	Maintenance Procedure
After the first hour	• Check the torque of the wheel nuts.
After the first 10 hours	• Check the torque of the wheel nuts.
After the first 25 hours	• Change the engine oil and filter.
After the first 50 hours	• Ensure that the battery hold-down fasteners are tight. • Change the hydraulic filter. • Check the engine rpm (at idle and full throttle).
Before each use or daily	• Check the engine oil. • Check the hydraulic fluid level. • Check the safety interlock system. • Inspect and cleanup after mowing. • Check the hydraulic lines and hoses.
Every 50 hours	• Grease the machine (immediately after every washing). • Service the air cleaner foam pre-cleaner (more frequently when operating conditions are dusty or dirty). • Check the battery electrolyte level. • Check the battery cable connections.
Every 100 hours	• Service the air cleaner cartridge (more frequently when operating conditions are dusty or dirty). • Change the engine oil and filter.
Every 200 hours	• Check the torque of the wheel nuts. • Check the reel bearing preload adjustment.
Every 800 hours	• Replace the spark plugs. • Replace the fuel filter. • Change the hydraulic oil. • Change the hydraulic filter. • Check the engine rpm (at idle and full throttle). • Check the valve clearance.
Every 2 years	• Check the fuel lines and connections. • Replace moving hoses.

Daily Maintenance Checklist

Duplicate this page for routine use.

Maintenance Check Item	For the week of:						
	Mon.	Tues.	Wed.	Thurs.	Fri.	Sat.	Sun.
Check the safety interlock operation.							
Check the instrument operation							
Check the leak detector alarm.							
Check the brake operation.							
Check the fuel level.							
Check the hydraulic oil level.							
Check the engine oil level.							
Clean the engine air cooling fins.							
Inspect the air filter pre-cleaner.							
Check any unusual engine noises.							
Check the reel-to-bedknife adjustment.							
Check the hydraulic hoses for damage.							
Check for fluid leaks.							
Check the tire pressure.							
Check the height-of-cut adjustment.							
Lubricate all grease fittings.[1]							
Lubricate the mow, lift, and brake linkage.							
Touch-up damaged paint.							
1. Immediately after every washing, regardless of the interval listed.							

Notation for Areas of Concern		
Inspection performed by:		
Item	Date	Information

Service Interval Chart

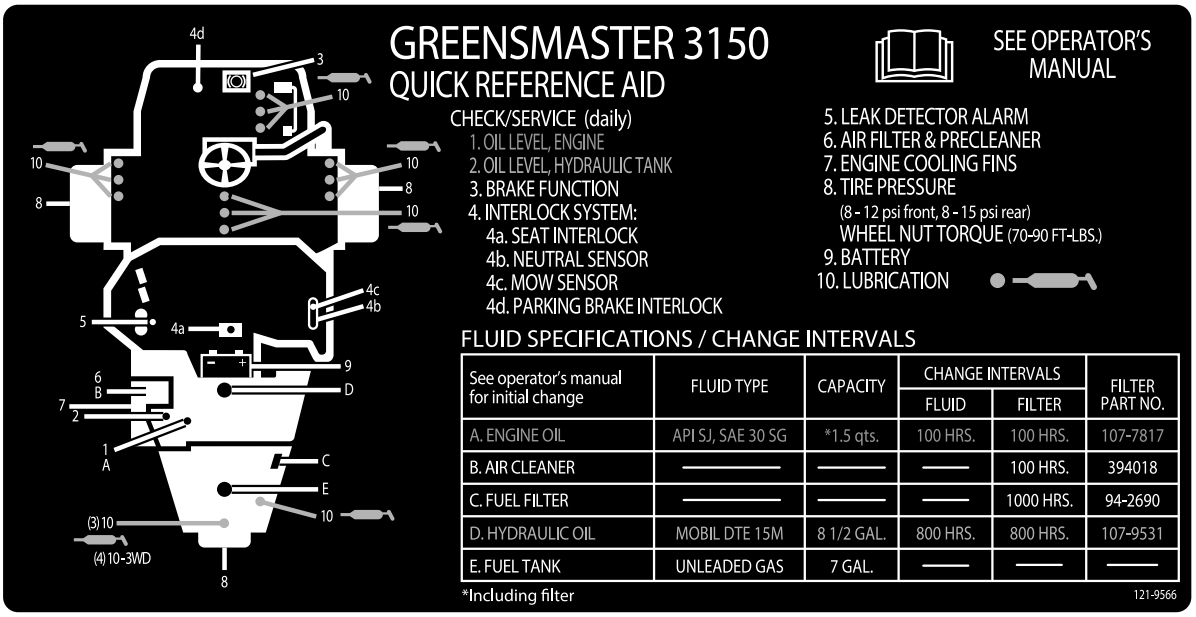

See operator's manual for initial change	FLUID TYPE	CAPACITY	CHANGE INTERVALS		FILTER PART NO.
			FLUID	FILTER	
A. ENGINE OIL	API SJ, SAE 30 SG	*1.5 qts.	100 HRS.	100 HRS.	107-7817
B. AIR CLEANER	——	——	——	100 HRS.	394018
C. FUEL FILTER	——	——	——	1000 HRS.	94-2690
D. HYDRAULIC OIL	MOBIL DTE 15M	8 1/2 GAL.	800 HRS.	800 HRS.	107-9531
E. FUEL TANK	UNLEADED GAS	7 GAL.	——	——	——

decal121-9566

Figure 32

Pre-Maintenance Procedures

Removing the Seat

The seat may be removed to ease performing maintenance in the valve block area of the machine.

1. Unlatch and raise the seat. Secure with prop rod.
2. Disconnect the 2 wire harness connectors under the seat.
3. Lower the seat and remove the cotter pin securing the seat pivot rod to the frame (Figure 33).

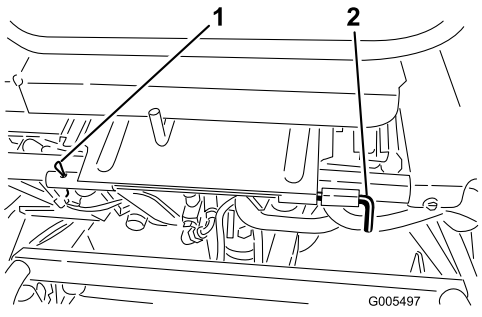

g005497

Figure 33

1. Cotter pin
2. Seat pivot rod

4. Slide the seat pivot rod to the left side, slide the seat forward, and lift the seat out.
5. Reverse the procedure to install the seat.

Jacking the Machine

⚠ CAUTION

Before servicing, support the machine with jacks stands or blocks of wood.

Before jacking the machine, lower the cutting units. The jacking points are as follows:

- Right side-under the jack pad and adjacent to the ROPS (Roll Over Protection System) support bracket (Figure 34)
- Left side-under the step
- Rear-at the castor fork

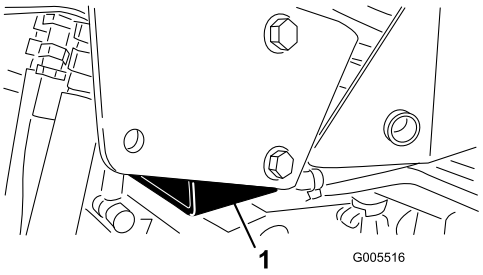

g005516

Figure 34

1. Jack pad

Lubrication

Greasing the Machine

Lubricate the grease fittings regularly with No. 2 General Purpose Lithium-Base Grease. If the you operate the machine under normal conditions, lubricate all bearings and bushings after every 50 hours of operation.

Locate the grease fitting as follows:

- Rear roller hub assembly or, if equipped with a 3-wheel drive kits, rear wheel roller clutches and external ball bearing (1) (Figure 35)

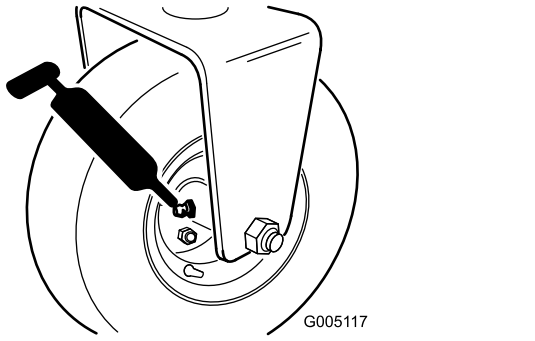

g005117

Figure 35

- Steering fork shaft (1) (Figure 36)
- Steering cylinder rod end (Figure 36)

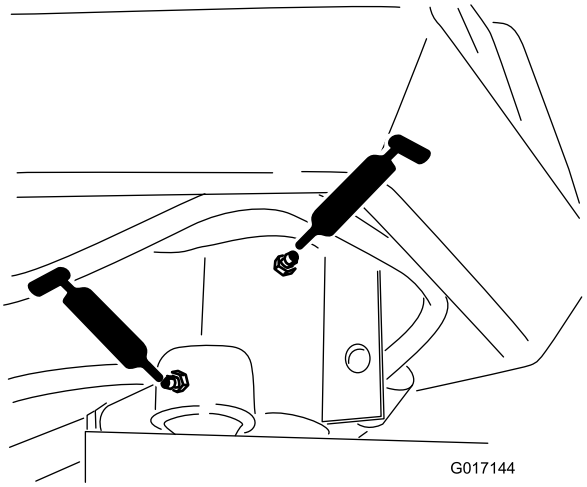

g017144

Figure 36

- Lift arm pivot (3) and pivot hinge (3) (Figure 37)

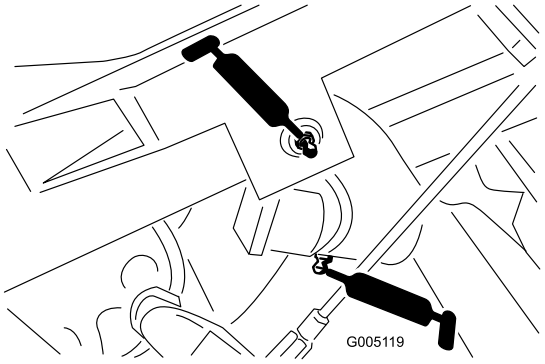

g005119

Figure 37

- Pull frame shaft and roller (12) (Figure 38)

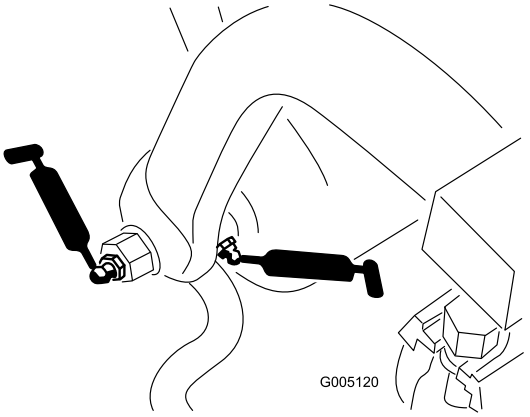

g005120

Figure 38

- Steering cylinder end (Figure 39)

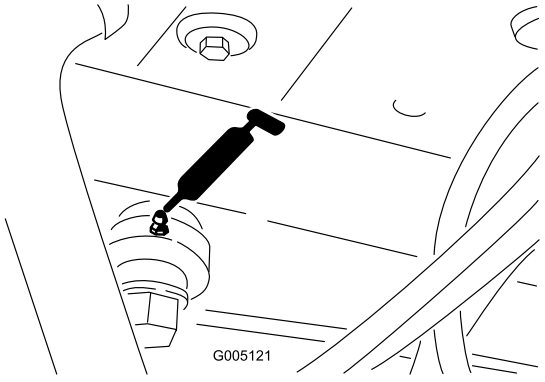

g005121

Figure 39

- Lift cylinders (3) (Figure 40)

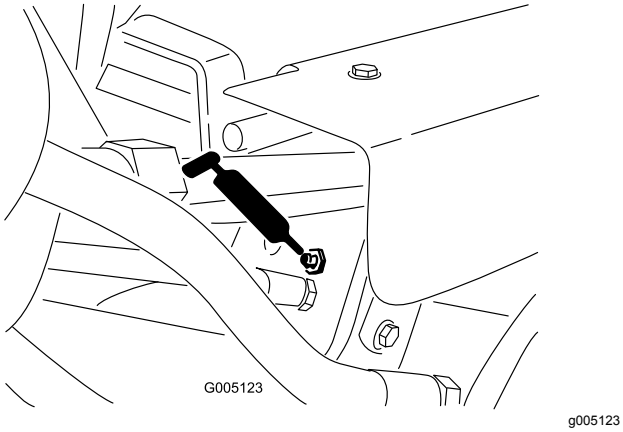

Figure 40

- Traction pedal (Figure 41)

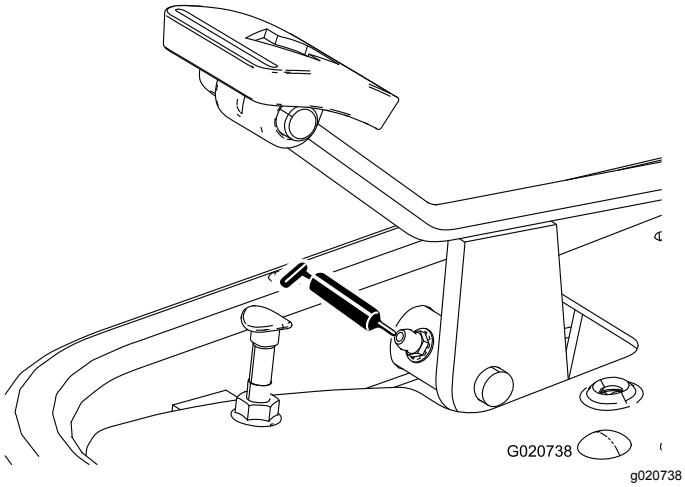

Figure 41

- Speed selector linkage (Figure 42 and Figure 43)

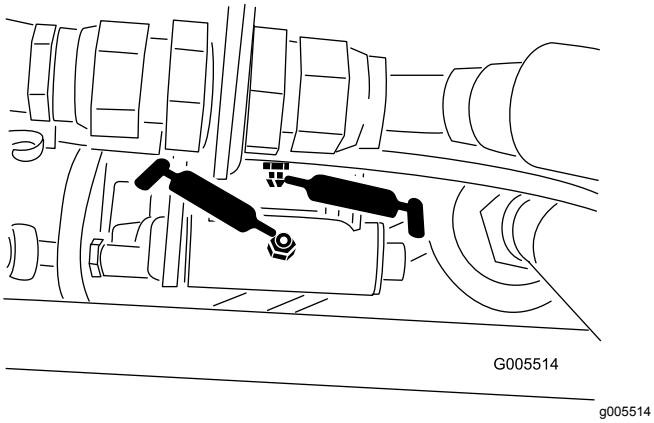

Figure 42

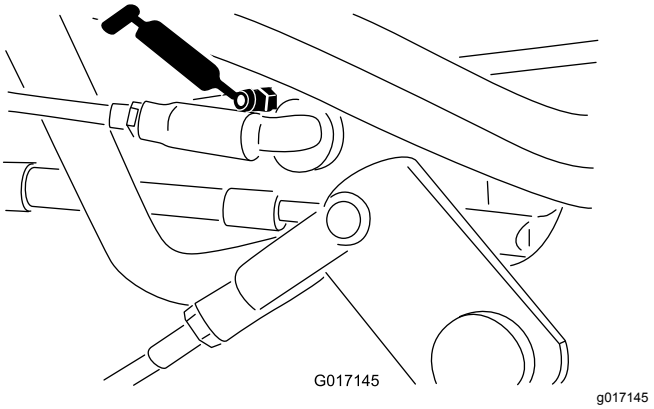

Figure 43

To grease the machine, complete the following procedure:

1. Wipe the grease fitting clean so foreign matter cannot be forced into the bearing or bushing.
2. Pump grease into the bearing or bushing until the grease is visible. Wipe up excess grease.
3. Apply grease to the reel motor spline shaft and onto the lift arm when the cutting unit is removed for service.
4. Apply a few drops of SAE 30 engine oil or spray lubricant (WD 40) to all pivot points daily after cleaning.

Servicing the Air Cleaner

Service the air cleaner foam pre-cleaner after every 50 operating hours and the air cleaner cartridge after every 100 operating hours (more frequently when operating conditions are dusty or dirty).

1. Release the locking clips and remove the air cleaner cover (Figure 44). Clean the cover thoroughly.

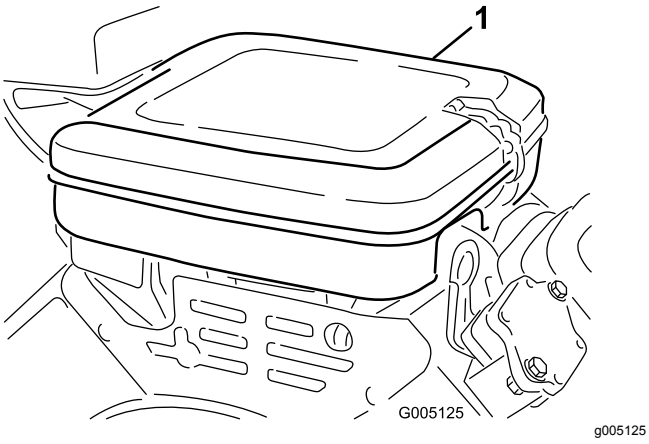

Figure 44

1. Air cleaner cover

2. Remove the wing nut securing the elements to the air cleaner body.
3. If the foam element is dirty, remove it from the paper element (Figure 45). Clean it thoroughly, as follows:
   A. Wash the foam element in a solution of liquid soap and warm water. Squeeze it to remove dirt, but do not twist it because the foam may tear.
   B. Dry it by wrapping it in a clean rag. Squeeze the rag and foam element dry.

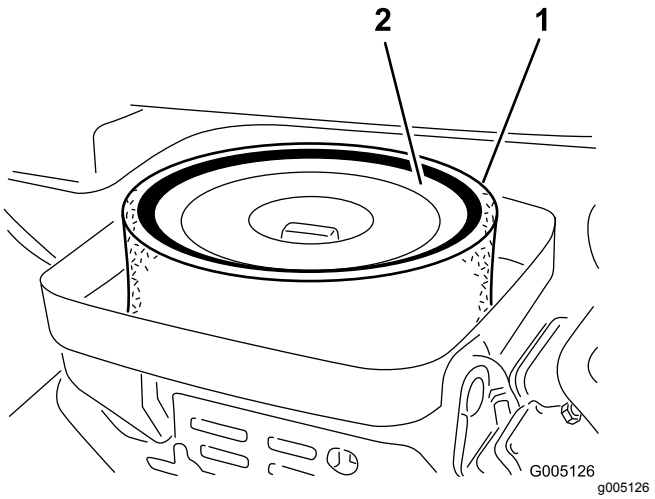

Figure 45

1. Foam element
2. Paper element

4. When servicing the foam element, check the condition of the paper element. Clean it by gently tapping it on a flat surface or replace it if needed.
5. Install the foam element, paper element, and air cleaner cover.

   Important: **Do not operate the engine without the air cleaner element because extreme engine wear and damage will likely result.**

Changing the Engine Oil and Filter

Change the oil and filter after the first 25 hours of operation. Thereafter, change them every 100 hours.

1. Remove the drain plug (Figure 46) and let oil flow into a drain pan. When the oil stops, install the drain plug.

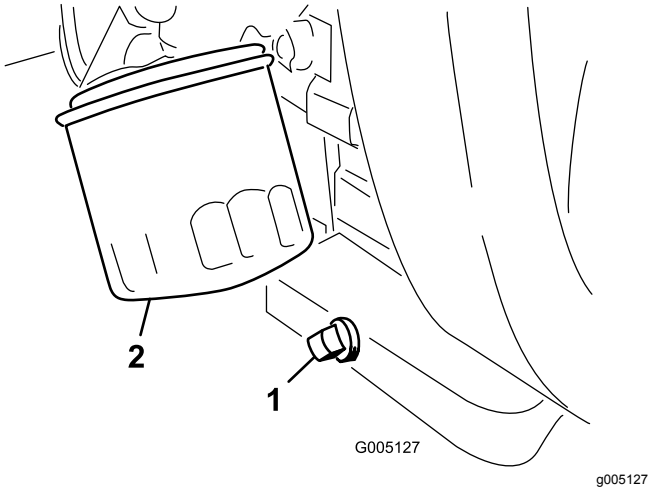

Figure 46

1. Drain plug
2. Oil filter

2. Remove the oil filter (Figure 46). Apply a light coat of clean oil to the new filter gasket.
3. Screw the filter on by hand until the gasket contacts the filter adapter, then tighten 3/4 to 1 turn further. **Do not overtighten**.
4. Add oil to the crankcase; refer to Checking the Engine Oil (page 21).
5. Dispose of the used oil properly.

Adjusting the Throttle Control

Proper throttle operation is dependent upon proper adjustment of the throttle control. Before adjusting the carburetor, ensure that the throttle control is operating properly.

1. Loosen the cable clamp screw securing the cable to the engine (Figure 47).

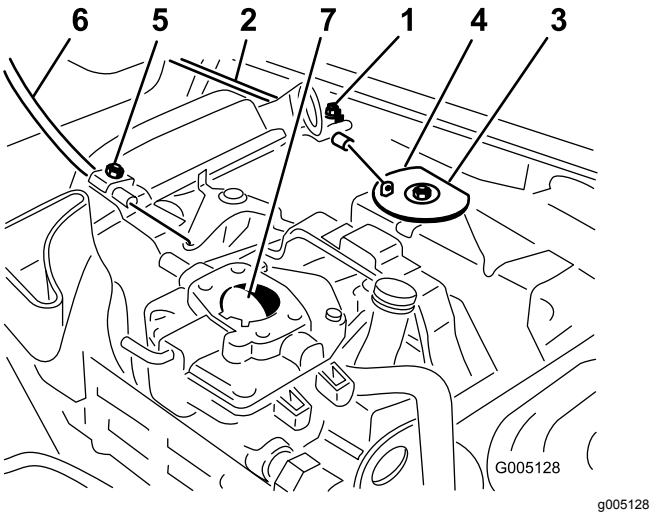

Figure 47

1. Throttle casing clamp screw
2. Throttle cable
3. Swivel
4. Stop
5. Choke casing clamp screw
6. Choke cable
7. Choke butterfly

2. Move the remote throttle control lever forward to the Fast position.
3. Pull firmly on the throttle cable until the back of the swivel contacts the stop (Figure 47).
4. Tighten the cable clamp screw and check the engine rpm setting.
   - High Idle: 2850±50 rpm
   - Low Idle: 1650±100 rpm

Adjusting the Choke Control

1. Loosen the cable clamp screw securing the cable to the engine (Figure 47).
2. Move the remote choke control lever forward to the Closed position.
3. Pull firmly on the choke cable until the choke butterfly is completely closed, then tighten the cable clamp screw (Figure 47).

Adjusting the Engine Speed

Important: **Before the carburetor and speed control are adjusted, the throttle and choke controls must be adjusted properly.**

⚠ WARNING

The engine must be running during adjustment of the carburetor and speed control. Contact with moving parts or hot surfaces may cause personal injury.

- **Shift into neutral and engage the parking brake before performing this procedure.**
- **Keep hands, feet, clothing, and other body parts away from the cutting blades, rotating parts, the muffler, and other hot surfaces.**

1. Start the engine and let it run at half throttle for approximately five minutes to warm up.
2. Move the throttle control to the Slow setting. Adjust the idle stop screw counterclockwise until it no longer contacts the throttle lever.
3. Bend the governed idle spring anchor tang (Figure 48) to attain an idle speed of 1650±100 rpm. Check the speed with a tachometer.

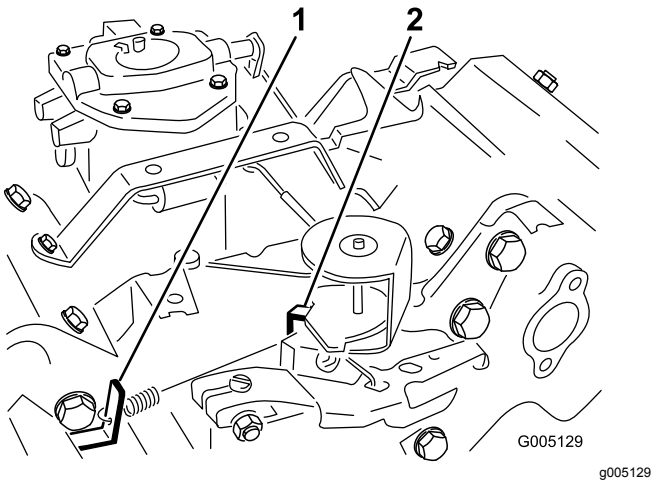

Figure 48

Shown with Air Cleaner Removed

1. Governed idle spring anchor tang
2. High speed spring anchor tang

4. Adjust the idle stop screw clockwise until the idle speed is an additional 25 to 50 rpm over the idle speed set in step 3
5. Move the throttle control to the Fast position. Bend the high speed spring anchor tang (Figure 48) to attain a high speed of 2850±50 rpm.

Replacing the Spark Plugs

Replace the spark plugs after every 800 operating hours.

The recommended air gap is 0.76 mm (0.030 inch)

The correct spark plug to use is a Champion RC 14YC.

Note: The spark plug usually lasts a long time; however, the plug should be removed and checked whenever the engine malfunctions.

1. Clean the area around the spark plugs so foreign matter cannot fall into the cylinder when the spark plug is removed.
2. Pull the spark plug wires off of the spark plugs and remove the plugs from the cylinder head.
3. Check the condition of the side electrode, center electrode, and center electrode insulator to ensure that there is no damage.

   Important: **Replace a cracked, fouled, dirty, or otherwise malfunctioning spark plug. Do not sand blast, scrape, or clean electrodes by using a wire brush because grit may eventually release from the plug, fall into the cylinder, and damage the engine.**
4. Set the air gap between the center and side of the electrodes at 0.76 mm (0.030 inch) (Figure 49).

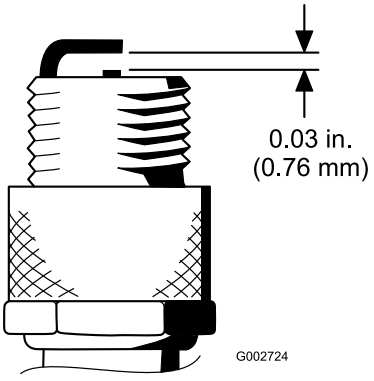

Figure 49

5. Install the correctly gapped spark plug with gasket seal, and tighten the plug to 23 Nm (200 in-lb). If a torque wrench is not used, tighten the plug firmly.

Fuel System Maintenance

Replacing the Fuel Filter

An in-line filter is incorporated into the fuel line between the fuel tank and carburetor (Figure 50). Replace the filter every 800 hours or sooner if the fuel flow is restricted. Be sure the arrow on the filter is pointing away from the fuel tank.

⚠ DANGER

In certain conditions, gasoline is extremely flammable and highly explosive. A fire or explosion from gasoline can burn you and others and can damage property.

- **Drain gasoline from the fuel tank when the engine is cold. Do this outdoors in an open area. Wipe up any gasoline that spills.**
- **Never smoke when draining gasoline, and stay away from an open flame or where a spark may ignite the gasoline fumes.**

1. Close the fuel shut off valve, loosen the hose clamp on the carburetor side of filter, and remove the fuel line from the filter (Figure 50).

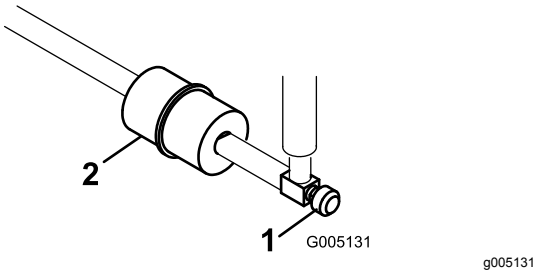

g005131

Figure 50

1. Fuel shut off valve
2. Fuel filter

2. Place a drain pan under the filter, loosen the remaining hose clamp and remove the filter (Figure 50).
3. Install the new filter with the arrow on the filter body pointing away from the fuel tank.

Fuel Lines and Connections

Service Interval: Every 2 years

Inspect the fuel lines for deterioration, damage, or loose connections.

Electrical System Maintenance

Servicing the Battery

Properly maintain the battery electrolyte and keep the top of the battery clean. Store the machine in a cool place to prevent the battery from running down.

Check the electrolyte level every 50 operating hours or, if machine is in storage, every 30 days.

⚠ DANGER

Battery electrolyte contains sulfuric acid which is a deadly poison and causes severe burns.

- **Do not drink electrolyte and avoid contact with skin, eyes or clothing. Wear safety glasses to shield your eyes and rubber gloves to protect your hands.**
- **Fill the battery where clean water is always available for flushing the skin.**

Maintain the cell level with distilled or demineralized water. Do not fill the cells above the bottom of the split ring inside each cell.

Keep the top of the battery clean by washing it periodically with a brush dipped in ammonia or bicarbonate of soda solution. Flush the top surface with water after cleaning it. Do not remove the fill caps while cleaning the battery.

The battery cables must be tight on the terminals to provide good electrical contact.

⚠ WARNING

Incorrect battery cable routing could damage the tractor and cables causing sparks. Sparks can cause the battery gasses to explode, resulting in personal injury.

- **Always disconnect the negative (black) battery cable before disconnecting the positive (red) cable.**
- **Always connect the positive (red) battery cable before connecting the negative (black) cable.**

If corrosion occurs at the terminals, disconnect the cables, negative (-) cable first, and scrape the clamps and terminals separately. Reconnect the cables, positive (+) cable first, and coat the terminals with petroleum jelly.

⚠ WARNING

CALIFORNIA
Proposition 65 Warning

Battery posts, terminals, and related accessories contain lead and lead compounds, chemicals known to the State of California to cause cancer and reproductive harm. Wash hands after handling.

Servicing the Fuses

The fuses in the machine's electrical system are located under the seat (Figure 51).

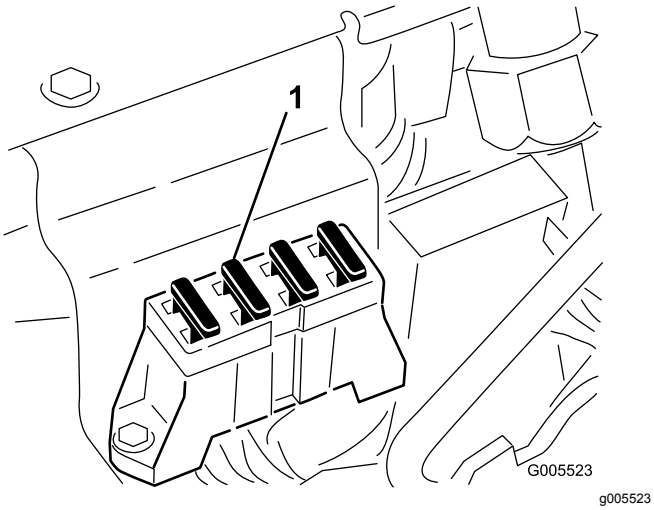

Figure 51

1. Fuses

Drive System Maintenance

Adjusting the Transmission for Neutral

If the machine creeps when the traction control pedal is in the neutral position, the neutral return mechanism must be adjusted.

1. Block up under the frame so that one of the front wheels is off of the floor.

   Note: If machine is equipped with a 3 wheel drive kit, the rear wheel must be raised off the floor and blocked.

2. Start the engine, move the throttle to Slow, and check the front wheel that is off of the floor; it must not be rotating.
3. If the wheel is rotating, stop the engine and proceed as follows:
   A. Loosen both jam nuts securing the traction control cable to the bulkhead on the hydrostat (Figure 52). Make sure the jam nuts are loosened equally and sufficiently to allow adjustment.

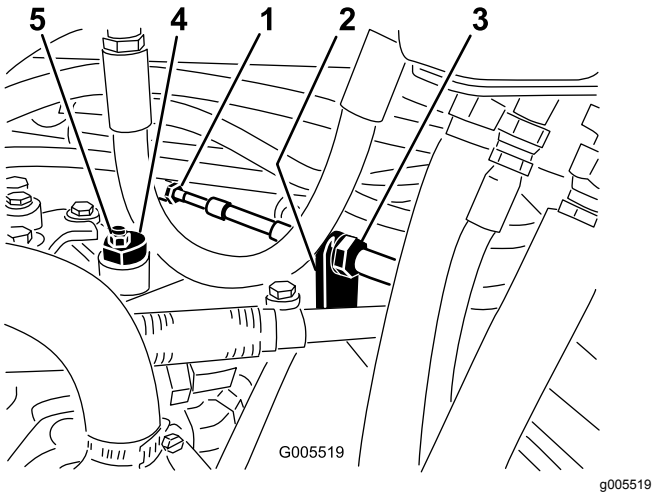

Figure 52

1. Traction cable
2. Bulkhead
3. Jam nuts
4. Eccentric
5. Locknut

   Note: Loosen the nut securing the eccentric to the top of the hydrostat (Figure 52).

   B. Move the functional control lever to Neutral and the throttle to Slow. Start the engine.
   C. Rotate the eccentric until creep does not occur in either direction. When the wheel stops rotating, tighten the nut locking the

eccentric and the adjustment (Figure 52). Verify the adjustment with the throttle in the Slow and Fast position.

D. From each side of the bulkhead, tighten the locknuts evenly, securing the traction cable to the bulkhead (Figure 52)Do not twist the cable.

Note: If cable tension exists when the functional control lever is in neutral, the machine may creep when the lever is moved to the Mow or Transport position.

Adjusting the Transport Speed

Obtaining Maximum Transport Speed

The traction pedal is adjusted for maximum transport speed at the factory, but an adjustment may be required if the pedal reaches full stroke before it contacts the pedal stop, or if a decrease in transport speed is desired.

To obtain maximum transport speed, put the functional control lever in the transport position and press down on the traction pedal. If the pedal contacts the stop (Figure 53) before tension is felt on the cable, an adjustment is required:

1. Put the functional control lever in the transport position and loosen the locknut securing the pedal stop to the floor plate (Figure 53).
2. Tighten the pedal stop until it does not contact the traction pedal.
3. Continue applying a light load on the transport pedal and adjust the pedal stop so it contacts the pedal rod and tighten the nuts.

Important: **The tension on the cable must not be excessive or cable life will be reduced.**

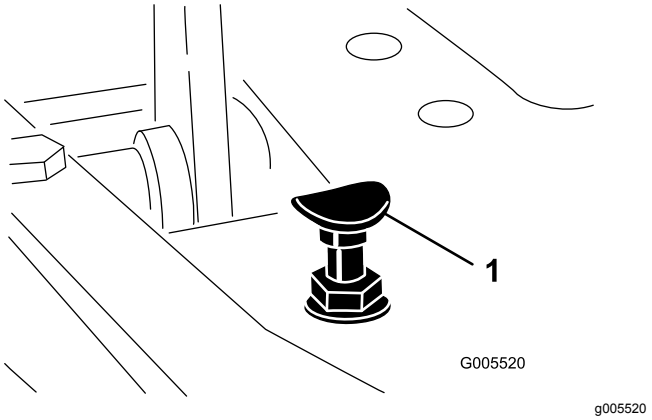

Figure 53

1. Pedal stop

Reducing Transport Speed

1. Press down on the traction pedal and loosen the locknut securing the pedal stop to the floor plate.
2. Loosen the pedal stop until the desired transport speed is obtained.
3. Tighten the locknut securing the pedal stop.

Adjusting the Mowing Speed

The machine is adjusted at the factory to 6.1 km/h (3.8 mph), but the speed may be varied if desired.

1. Loosen the jam nut on the pedal lock bolt (Figure 54).

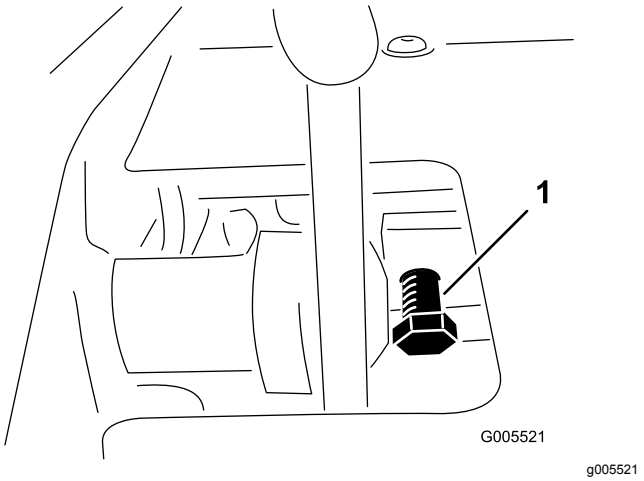

Figure 54

1. Pedal lock capscrew

2. Rotate the bolt clockwise to increase the mowing speed and counterclockwise to decrease it.
3. Tighten the jam nut and check the ground speed. Repeat this procedure, if required.

Brake Maintenance

Adjusting the Brakes

A brake adjustment rod is located on each side of the machine so that the brakes can be equally adjusted. Adjust the brakes as follows:

1. While moving forward in transport speed, press the brake pedal; both wheels should lock equally.

   ⚠ CAUTION

   Testing the brakes in a confined area where others are present could cause injury.

   Always check the brakes in a wide, open-spaced, flat area which is free of other persons and obstructions before and after adjustment.

2. If the brakes do not lock equally, disconnect the brake rods by removing the cotter pin and clevis pin (Figure 55).

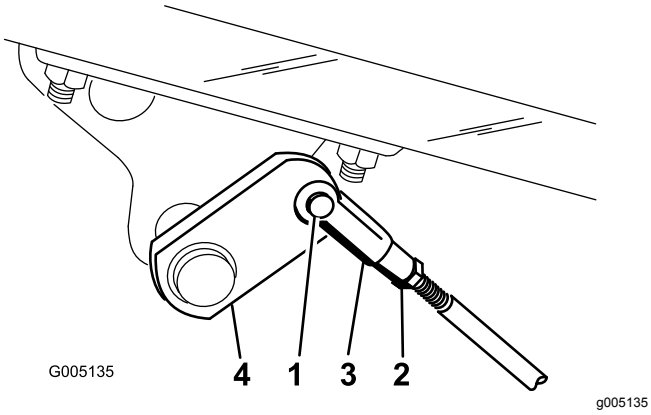

Figure 55

1. Clevis pin and cotter pin
2. Jam nut
3. Clevis
4. Brake shaft

3. Loosen the jam nut and adjust the clevis accordingly (Figure 55).
4. Assemble the clevis to the brake shaft (Figure 55).
5. Check the amount of free travel of the brake pedal when the adjustment is completed. There should be 13 to 26 mm (1/2 to 1 inch) travel before the brake shoes make contact with the brake drums. Adjust, if necessary, to achieve this setting.
6. While moving forward in transport speed, press the brake pedal; both brakes should lock equally. Adjust, if necessary.
7. It is recommended that the brakes be burnished annually; refer to the Break-in Period (page 24) section.

Adjusting the Cutting Unit Lift/Drop

The cutting unit lift/drop circuit is equipped with a flow control valve (Figure 56). This valve is preset at the factory at approximately 3 turns open, but an adjustment may be required to compensate for differences in hydraulic oil temperatures, mowing speeds, etc. If an adjustment is required, proceed as follows:

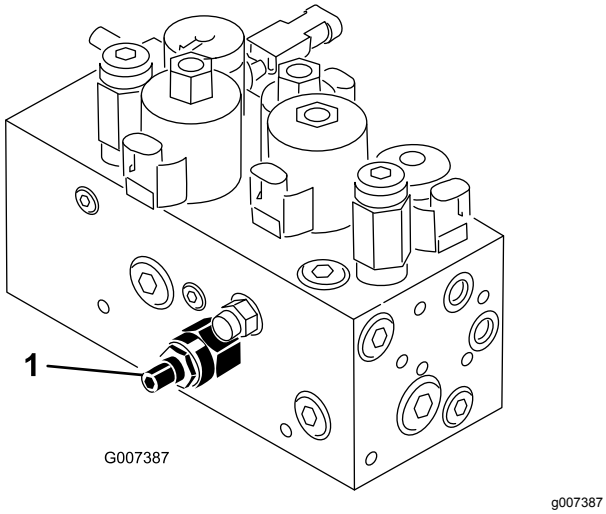

Figure 56

1. Flow control valve

Note: Allow the hydraulic oil to reach full operating temperature before adjusting the flow control valve.

1. Raise the seat and locate the flow control valve for the center pull frame (Figure 56) which is located on the side of the hydraulic manifold.
2. Loosen the jam nut on the adjusting knob on the flow control.
3. Rotate the knob 1/4 turn counterclockwise if the center cutting unit is dropping too late or 1/4 turn clockwise if the center cutting unit is dropping too early.
4. After the desired setting has been achieved, tighten the set screw.

Adjusting the Lift Cylinders

To regulate the height of the front cutting units when in the raised (transport) position, you can adjust the front lift cylinders.

1. Lower the cutting units to the ground.
2. Loosen the jam nut on the clevis of the cutting unit lift cylinder that needs to be adjusted.
3. Disconnect the cylinder clevis from the lift arm.
4. Rotate the clevis until you attain the desired height.
5. Connect the cylinder clevis to the lift arm and tighten the jam nut.

Hydraulic System Maintenance

Changing the Hydraulic Oil and Filter

Change the hydraulic oil after every 800 operating hours.

If the oil becomes contaminated, contact your local Toro distributor because the system must be flushed. Contaminated oil looks milky or black when compared to clean oil.

Change the filter:

- After the first 50 operating hours
- After every 800 operating hours

1. Clean the area around the filter mounting area (Figure 57). Place a drain pan under the filter and remove the filter.

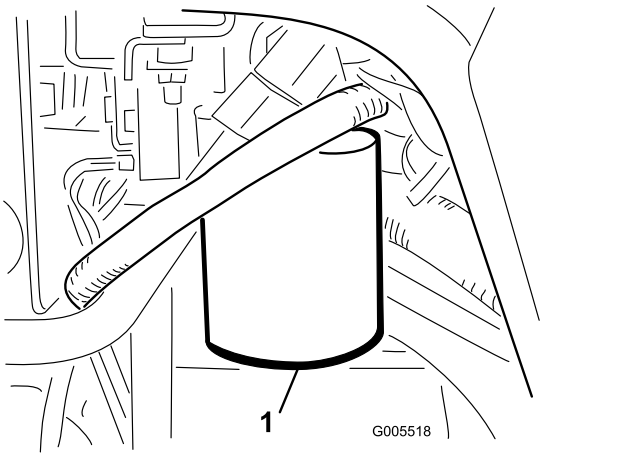

g005518

Figure 57

1. Hydraulic filter

Note: If the oil is not going to be drained, disconnect and plug the hydraulic line going to the filter.

2. Fill the replacement filter with the appropriate hydraulic fluid, lubricate the sealing gasket, and hand turn it until the gasket contacts the filter head. Then tighten 3/4 turn further.
3. Fill the hydraulic reservoir and small auxiliary tank with approximately 32 l (8-1/2 gallons) of hydraulic oil; refer to Checking the Hydraulic Fluid Level (page 23).
4. Start the machine and run it at idle for 3 to 5 minutes to circulate the fluid and remove any air trapped in the system. Stop the machine and recheck the fluid level.
5. Dispose of the oil and filter properly.

Note: If the leak detector alarm sounds, turn the key off and wait a few minutes for the oil level to equalize in the tanks. Recheck the fluid level and add oil, if required.

Checking the Hydraulic Lines and Hoses

⚠ WARNING

Hydraulic fluid escaping under pressure can penetrate skin and cause injury.

- **Make sure all hydraulic fluid hoses and lines are in good condition and all hydraulic connections and fittings are tight before applying pressure to the hydraulic system.**
- **Keep your body and hands away from pin hole leaks or nozzles that eject high pressure hydraulic fluid.**
- **Use cardboard or paper to find hydraulic leaks.**
- **Safely relieve all pressure in the hydraulic system before performing any work on the hydraulic system.**
- **Get immediate medical help if fluid is injected into skin.**

Check the hydraulic lines and hoses daily for leaks, kinked lines, loose mounting supports, wear, loose fittings, weather deterioration, and chemical deterioration. Make all necessary repairs before operating.

Cutting Unit Maintenance

Backlapping

⚠ WARNING

Contact with the reels or other moving parts can result in personal injury.

- **Keep fingers, hands, and clothing away from the reels or other moving parts.**
- **Never attempt to turn the reels by hand or foot while the engine is running.**

1. Position the machine on a level surface, lower the cutting units, stop the engine and engage the parking brake.
2. Unlock and raise the seat to expose the controls.
3. Make initial reel to bedknife adjustments appropriate for backlapping on all cutting units which are to be backlapped; refer to the *Cutting Unit Operator's Manual*.

⚠ DANGER

Changing the engine speed while backlapping may cause the reels to stall.

- **Never change the engine speed while backlapping.**
- **Only backlap at idle engine speed.**

4. Start the engine and run at low idle speed.
5. Rotate the Backlap Lever to the “R” position (Figure 58).
6. Rotate the Reel Speed Control to setting 1 (Figure 58).

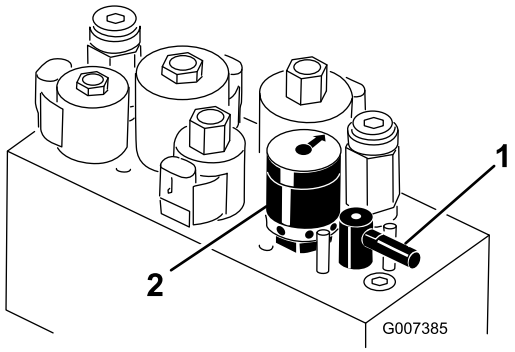

g007385

Figure 58

1. Backlap lever
2. Reel speed control

7. With the Mow/Transport lever in the neutral position, move the Lower Mow/Lift control forward to start the backlapping operation on the designated reels.
8. Apply lapping compound with a long handle brush. Never use a short handled brush.
9. If the reels stall or become erratic while backlapping, select a higher reel speed setting until the speed stabilizes, then return the reel speed to setting 1 or to your desired speed.
10. To make an adjustment to the cutting units while backlapping, turn the reels off by moving the Lower Mow/Raise lever rearward and stop the engine. After completing adjustments, repeat steps 4 through 8.
11. Repeat the procedure for all cutting units you want to backlap.
12. When finished, return the backlap levers to the "F" position, lower the seat, and wash all lapping compound off of the cutting units. Adjust cutting unit reel to bedknife as needed. Move the cutting unit reel speed control to the desired mowing position.

Important: **If the backlap lever is not returned to the “F” position after backlapping, the cutting units will not raise or function properly.**

Storage

If you wish to store the machine for a long period of time, the following steps should be performed prior to storage:

1. Remove accumulations of dirt and old grass clippings. Sharpen the reels and bedknives, if necessary; refer to the *Cutting Unit Operator's Manual*. Use a rust preventive on bedknives and reel blades. Grease and oil all lubrication points; refer to Greasing the Machine (page 34).
2. Block up the wheels to remove any weight on the tires.
3. Drain and replace the hydraulic fluid and filter and inspect the hydraulic lines and fittings. Replace, if necessary; refer to Changing the Hydraulic Oil and Filter (page 44) and Checking the Hydraulic Lines and Hoses (page 44).
4. All fuel should be removed from the fuel tank. Run the engine until it stops from lack of fuel. Replace the fuel filter; refer to Replacing the Fuel Filter (page 39).
5. While the engine is still warm, drain the oil from the crankcase. Refill it with fresh oil; refer to Changing the Engine Oil and Filter (page 36).
6. Remove the spark plugs, pour one ounce of SAE 30 oil into the cylinders, and crank slowly to distribute the oil. Replace the spark plugs; refer to Replacing the Spark Plugs (page 38).
7. Clean dirt and chaff from the cylinder, cylinder head fins, and blower housing.
8. Remove the battery and charge it fully. Either store it on the shelf or on the machine. Leave the cables disconnected if it is stored on the machine. Store the battery in a cool atmosphere to avoid quick deterioration of the charge in the battery.
9. If possible, store the machine in a warm, dry location.

Notes:

The Toro Total Coverage Guarantee

A Limited Warranty

Conditions and Products Covered

The Toro Company and its affiliate, Toro Warranty Company, pursuant to an agreement between them, jointly warrant your Toro Commercial product ("Product") to be free from defects in materials or workmanship for two years or 1500 operational hours*, whichever occurs first. This warranty is applicable to all products with the exception of Aerators (refer to separate warranty statements for these products). Where a warrantable condition exists, we will repair the Product at no cost to you including diagnostics, labor, parts, and transportation. This warranty begins on the date the Product is delivered to the original retail purchaser.
* Product equipped with an hour meter.

Instructions for Obtaining Warranty Service

You are responsible for notifying the Commercial Products Distributor or Authorized Commercial Products Dealer from whom you purchased the Product as soon as you believe a warrantable condition exists. If you need help locating a Commercial Products Distributor or Authorized Dealer, or if you have questions regarding your warranty rights or responsibilities, you may contact us at:

Toro Commercial Products Service Department
Toro Warranty Company
8111 Lyndale Avenue South
Bloomington, MN 55420-1196

952–888–8801 or 800–952–2740
E-mail: commercial.warranty@toro.com

Owner Responsibilities

As the Product owner, you are responsible for required maintenance and adjustments stated in your *Operator's Manual*. Failure to perform required maintenance and adjustments can be grounds for disallowing a warranty claim.

Items and Conditions Not Covered

Not all product failures or malfunctions that occur during the warranty period are defects in materials or workmanship. This warranty does not cover the following:

- Product failures which result from the use of non-Toro replacement parts, or from installation and use of add-on, or modified non-Toro branded accessories and products. A separate warranty may be provided by the manufacturer of these items.
- Product failures which result from failure to perform recommended maintenance and/or adjustments. Failure to properly maintain your Toro product per the Recommended Maintenance listed in the *Operator's Manual* can result in claims for warranty being denied.
- Product failures which result from operating the Product in an abusive, negligent, or reckless manner.
- Parts subject to consumption through use unless found to be defective. Examples of parts which are consumed, or used up, during normal Product operation include, but are not limited to, brake pads and linings, clutch linings, blades, reels, rollers and bearings (sealed or greasable), bed knives, spark plugs, castor wheels and bearings, tires, filters, belts, and certain sprayer components such as diaphragms, nozzles, and check valves, etc.
- Failures caused by outside influence. Conditions considered to be outside influence include, but are not limited to, weather, storage practices, contamination, use of unapproved fuels, coolants, lubricants, additives, fertilizers, water, or chemicals, etc.
- Failure or performance issues due to the use of fuels (e.g. gasoline, diesel, or biodiesel) that do not conform to their respective industry standards.
- Normal noise, vibration, wear and tear, and deterioration.
- Normal "wear and tear" includes, but is not limited to, damage to seats due to wear or abrasion, worn painted surfaces, scratched decals or windows, etc.

Parts

Parts scheduled for replacement as required maintenance are warranted for the period of time up to the scheduled replacement time for that part. Parts replaced under this warranty are covered for the duration of the original product warranty and become the property of Toro. Toro will make the final decision whether to repair any existing part or assembly or replace it. Toro may use remanufactured parts for warranty repairs.

Deep Cycle and Lithium-Ion Battery Warranty:

Deep cycle and Lithium-Ion batteries have a specified total number of kilowatt-hours they can deliver during their lifetime. Operating, recharging, and maintenance techniques can extend or reduce total battery life. As the batteries in this product are consumed, the amount of useful work between charging intervals will slowly decrease until the battery is completely worn out. Replacement of worn out batteries, due to normal consumption, is the responsibility of the product owner. Battery replacement may be required during the normal product warranty period at owner's expense. Note: (Lithium-Ion battery only): A Lithium-Ion battery has a part only prorated warranty beginning year 3 through year 5 based on the time in service and kilowatt hours used. Refer to the *Operator's Manual* for additional information.

Maintenance is at Owner's Expense

Engine tune-up, lubrication, cleaning and polishing, replacement of filters, coolant, and completing recommended maintenance are some of the normal services Toro products require that are at the owner's expense.

General Conditions

Repair by an Authorized Toro Distributor or Dealer is your sole remedy under this warranty.

Neither The Toro Company nor Toro Warranty Company is liable for indirect, incidental or consequential damages in connection with the use of the Toro Products covered by this warranty, including any cost or expense of providing substitute equipment or service during reasonable periods of malfunction or non-use pending completion of repairs under this warranty. Except for the Emissions warranty referenced below, if applicable, there is no other express warranty. All implied warranties of merchantability and fitness for use are limited to the duration of this express warranty.

Some states do not allow exclusions of incidental or consequential damages, or limitations on how long an implied warranty lasts, so the above exclusions and limitations may not apply to you. This warranty gives you specific legal rights, and you may also have other rights which vary from state to state.

Note regarding engine warranty:

The Emissions Control System on your Product may be covered by a separate warranty meeting requirements established by the U.S. Environmental Protection Agency (EPA) and/or the California Air Resources Board (CARB). The hour limitations set forth above do not apply to the Emissions Control System Warranty. Refer to the Engine Emission Control Warranty Statement supplied with your product or contained in the engine manufacturer's documentation for details

Countries Other than the United States or Canada

Customers who have purchased Toro products exported from the United States or Canada should contact their Toro Distributor (Dealer) to obtain guarantee policies for your country, province, or state. If for any reason you are dissatisfied with your Distributor's service or have difficulty obtaining guarantee information, contact the Toro importer.