Form No. 3414-523 Rev B

TORO®

Count on it.

Operator's Manual

Greensmaster® 3150 2-Wheel Drive Traction Unit

Model No. 04358—Serial No. 400000000 and Up

Register at www.Toro.com.
Original Instructions (EN)

CE

3414-523 B

This product complies with all relevant European directives; for details, please see the separate product specific Declaration of Conformity (DOC) sheet.

⚠ WARNING

CALIFORNIA
Proposition 65 Warning

This product contains a chemical or chemicals known to the State of California to cause cancer, birth defects, or reproductive harm.

The engine exhaust from this product contains chemicals known to the State of California to cause cancer, birth defects, or other reproductive harm.

It is a violation of California Public Resource Code Section 4442 or 4443 to use or operate the engine on any forest-covered, brush-covered, or grass-covered land unless the engine is equipped with a spark arrester, as defined in Section 4442, maintained in effective working order or the engine is constructed, equipped, and maintained for the prevention of fire.

Introduction

This machine is a ride-on, reel-blade lawn mower intended to be used by professional, hired operators in commercial applications. It is primarily designed for cutting grass on well-maintained lawns in parks, golf courses, sports fields, and on commercial grounds. It is not designed for cutting brush, mowing grass and other growth alongside highways, or for agricultural uses.

Read this information carefully to learn how to operate and maintain your product properly and to avoid injury and product damage. You are responsible for operating the product properly and safely.

You may contact Toro directly at www.Toro.com for product and accessory information, help finding a dealer, or to register your product.

Whenever you need service, genuine Toro parts, or additional information, contact an Authorized Toro Distributor and have the model and serial numbers of your product ready. Figure 1 identifies the location of the model and serial numbers on the product. Write the numbers in the space provided.

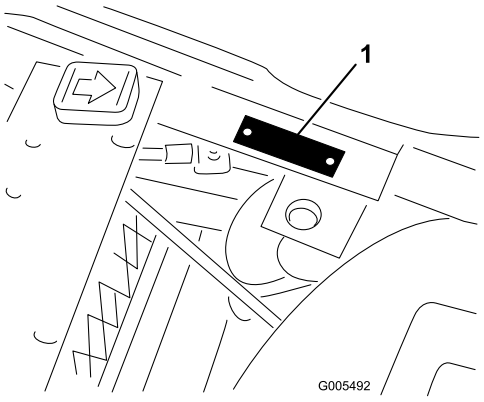

g005492

Figure 1

1. Model and serial number location

Model No. _____

Serial No. _____

This manual identifies potential hazards and has safety messages identified by the safety-alert symbol (Figure 2), which signals a hazard that may cause serious injury or death if you do not follow the recommended precautions.



g000502

Figure 2

1. Safety-alert symbol

This manual uses 2 words to highlight information. **Important** calls attention to special mechanical information and **Note** emphasizes general information worthy of special attention.

© 2017—The Toro® Company
8111 Lyndale Avenue South
Bloomington, MN 55420

Contact us at www.Toro.com.
Printed in the USA
All Rights Reserved

Contents

Safety 4
General Safety 4
Safety and Instructional Decals 4
Setup 9
1 Activating and Charging the Battery 10
2 Installing the Battery 11
3 Installing the Roll Bar 12
4 Installing the Cutting Units 12
5 Marking the Outer Grass Baskets 13
6 Adding Rear Ballast and Weight Kit 14
7 Installing the CE Guard Kit 14
8 Installing CE Decals 14
9 Reducing the Tire Pressure 15
10 Burnishing the Brakes 15
Product Overview 15
Controls 15
Specifications 18
Attachments/Accessories 18
Operation 19
Before Operation Safety 19
Filling the Fuel Tank 19
Performing Daily Maintenance 19
During Operation Safety 20
Breaking in the Machine 21
Starting the Engine 21
Shutting Off the Engine 21
Checking the Safety-Interlock System 21
Driving the Machine without Mowing 22
Mowing 22
After Operation Safety 24
Inspecting and Cleaning after Mowing 24
Hauling the Machine 24
Towing the Machine 24
Maintenance 25
Recommended Maintenance Schedule(s) 25
Daily Maintenance Checklist 27
Pre-Maintenance Procedures 28
Pre-Maintenance Safety 28
Removing the Seat Assembly 28
Raising the Machine 28
Lubrication 29
Greasing the Machine 29
Engine Maintenance 31
Engine Safety 31
Servicing the Air Cleaner 31
Servicing the Engine Oil 31
Replacing the Spark Plugs 32
Fuel System Maintenance 33
Replacing the Fuel Filter 33
Inspecting the Fuel Lines and Connections 33
Electrical System Maintenance 33
Electrical System Safety 33
Servicing the Battery 33
Locating the Fuses 34
Drive System Maintenance 34
Checking the Tire Pressure 34
Checking the Torque of the Wheel Nuts 34
Adjusting the Transmission for Neutral 34
Adjusting the Transport Speed 35
Adjusting the Mowing Speed 35
Brake Maintenance 36
Adjusting the Brakes 36
Controls System Maintenance 37
Adjusting the Cutting Unit Lift/Drop 37
Adjusting the Lift Cylinders 37
Hydraulic System Maintenance 38
Hydraulic System Safety 38
Servicing the Hydraulic Fluid 38
Checking the Hydraulic Lines and Hoses 40
Checking the Leak Detector 40
Cutting Unit Maintenance 42
Cutting Unit Safety 42
Checking the Reel-to-Bedknife Contact 42
Setting the Reel Speed 42
Backlapping the Reels 42
Storage 44

Safety

This machine has been designed in accordance with EN ISO 5395:2013 and ANSI B71.4-2012 and meets these standards when you add the appropriate weight kit, ballast, CE decals, and guard kit.

General Safety

This product is capable of amputating hands and feet and of throwing objects. Always follow all safety instructions to avoid serious personal injury.

Using this product for purposes other than its intended use could prove dangerous to you and bystanders.

- Read and understand the contents of this *Operator's Manual* before starting the engine.
- Do not put your hands or feet near moving components of the machine.
- Do not operate the machine without all guards and other safety protective devices in place and working on the machine.
- Keep clear of any discharge opening. Keep bystanders and pets a safe distance away from the machine.
- Keep children out of the operating area. Never allow children to operate the machine.
- Stop the machine and shut off the engine before servicing, fueling, or unclogging the machine.

Improperly using or maintaining this machine can result in injury. To reduce the potential for injury, comply with these safety instructions and always pay attention to the safety-alert symbol, which means Caution, Warning, or Danger—personal safety instruction. Failure to comply with these instructions may result in personal injury or death.

You can find additional safety information where needed throughout this *Operator's Manual*.

Safety and Instructional Decals

Safety decals and instructions are easily visible to the operator and are located near any area of potential danger. Replace any decal that is damaged or missing.

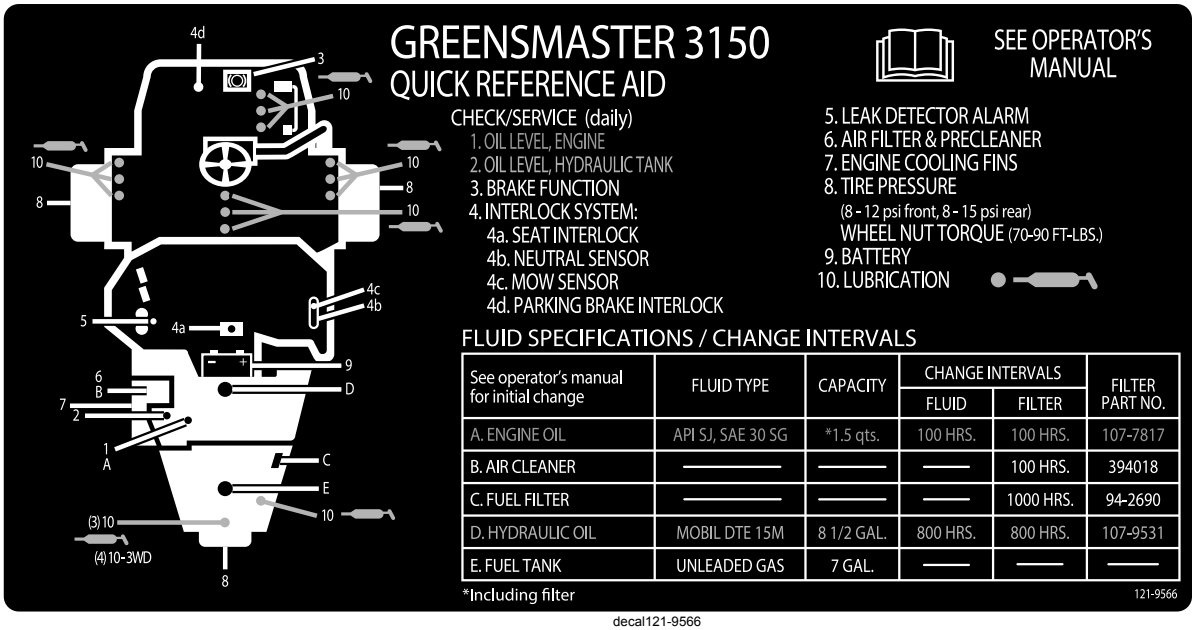

See operator's manual for initial change	FLUID TYPE	CAPACITY	CHANGE INTERVALS		FILTER PART NO.
			FLUID	FILTER	
A. ENGINE OIL	API SJ, SAE 30 SG	*1.5 qts.	100 HRS.	100 HRS.	107-7817
B. AIR CLEANER	———	———	———	100 HRS.	394018
C. FUEL FILTER	———	———	———	1000 HRS.	94-2690
D. HYDRAULIC OIL	MOBIL DTE 15M	8 1/2 GAL.	800 HRS.	800 HRS.	107-9531
E. FUEL TANK	UNLEADED GAS	7 GAL.	———	———	———

decal121-9566

121–9566

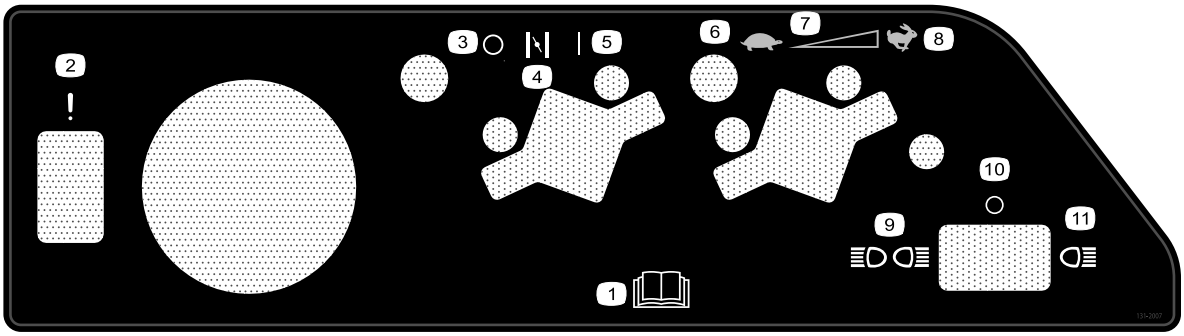

decal131-2007

131-2007

1. Read the *Operator's Manual*.
2. Failure/malfunction (Leak detector alarm test)
3. Off
4. Choke
5. On
6. Slow
7. Continuous-variable setting
8. Fast
9. Front and rear lights
10. Lights off
11. Front lights

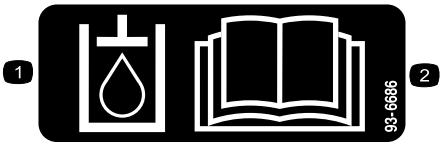

decal93-6686

93-6686

1. Hydraulic fluid
2. Read the *Operator's Manual.*

CALIFORNIA SPARK ARRESTER WARNING

Operation of this equipment may create sparks that can start fires around dry vegetation. A spark arrester may be required. The operator should contact local fire agencies for laws or regulations relating to fire prevention requirements. 117-2718

decal117-2718

117–2718



decal93-9051

93-9051

1. Read the *Operator's Manual.*

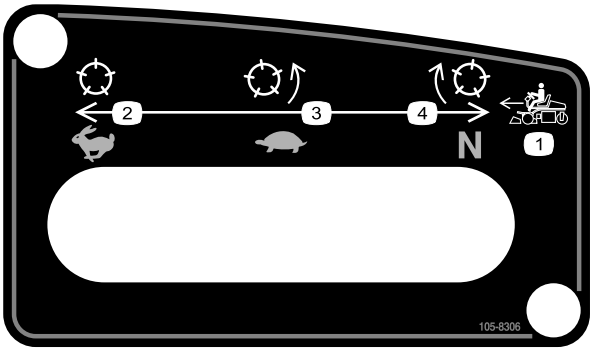

decal105-8306

105-8306

1. Forward machine speeds
2. Fast—use for transport
3. Slow—use for mowing
4. Neutral—use for backlapping.

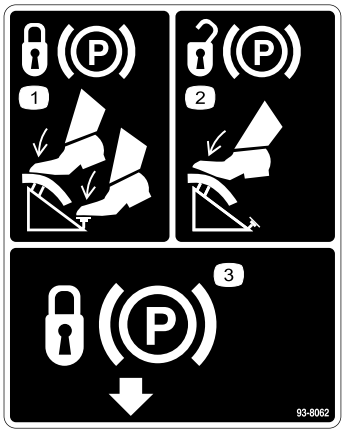

decal93-8062

93-8062

1. To lock the parking brake, press the brake pedal, and the parking-brake lock.
2. To unlock the parking brake, press the brake pedal.
3. Parking-brake lock

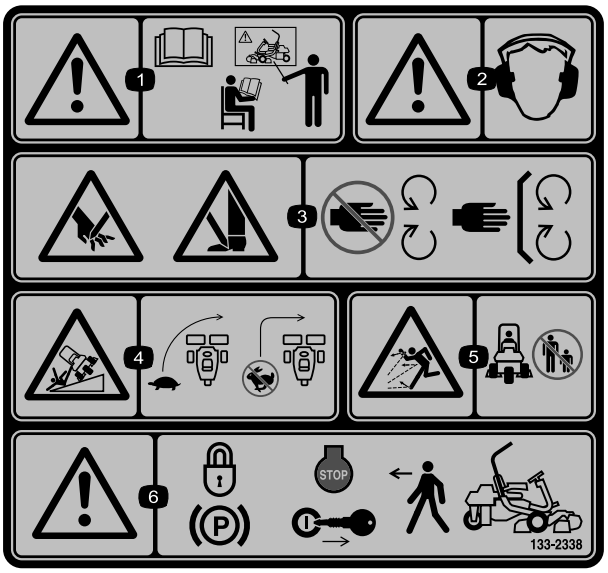

decal133-2338

133-2338

1. Warning—read the *Operator's Manual*, do not operate this machine unless you are trained.
2. Warning—wear hearing protection.
3. Cutting/dismemberment hazard of hand or foot, mower blade—stay away from moving parts; keep all guards and shields in place.
4. Tipping hazard—slow the machine before turning, do not turn at high speeds.
5. Thrown object hazard—keep bystanders a safe distance away from the machine.
6. Warning—lock the parking brake, shut off the engine, and remove the ignition key before leaving the machine.

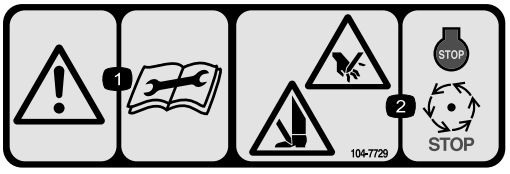

decal104-7729

104-7729

1. Warning—read the instructions before servicing or performing maintenance.
2. Cutting/dismemberment hazard; hand or foot—shut off the engine and wait for moving parts to stop.



decalbatterysymbols

Battery Symbols

Some or all of these symbols are on your battery.

1. Explosion hazard
2. No fire, open flame, or smoking
3. Caustic liquid/chemical burn hazard
4. Wear eye protection.
5. Read the *Operator's Manual.*
6. Keep bystanders a safe distance away from the battery.
7. Wear eye protection; explosive gases can cause blindness and other injuries.
8. Battery acid can cause blindness or severe burns.
9. Flush eyes immediately with water and get medical help fast.
10. Contains lead; do not discard

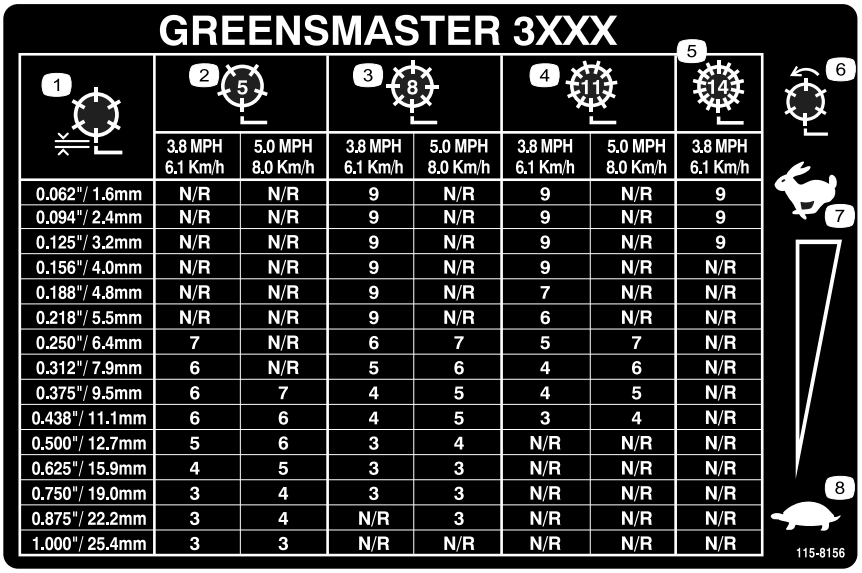

decal115-8156

115-8156

1. Reel height
2. 5–Blade cutting unit
3. 8–Blade cutting unit
4. 11–Blade cutting unit
5. 14–Blade cutting unit
6. Reel speed
7. Fast
8. Slow

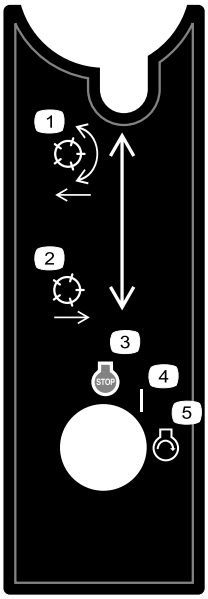

decal105-8305

105-8305

1. Lower and engage the reels.
2. Raise and disengage the reels.
3. Engine—shut off
4. On
5. Engine—start

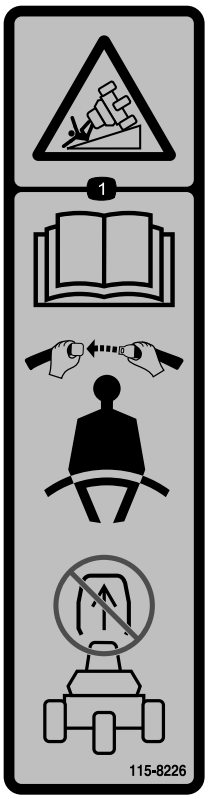

decal115-8226

115-8226

1. Tipping hazard—read the *Operator's Manual*; always wear a seat belt when operating; do not remove the rollover protection system (ROPS).

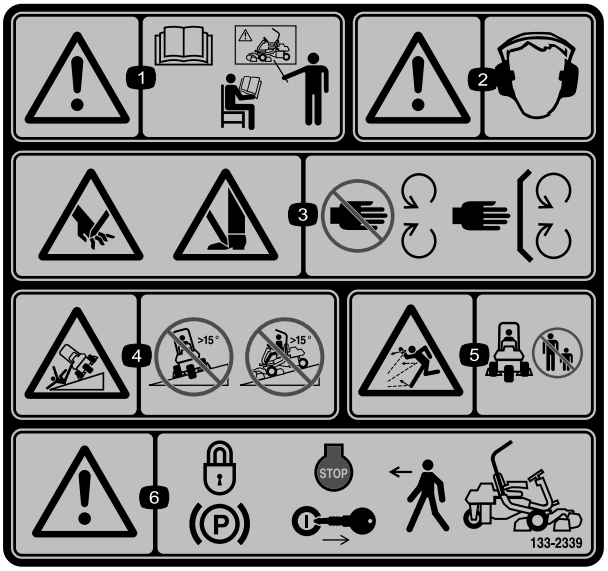

decal133-2339

133-2339

Replaces Decal 133-2338 for CE Machines

1. Warning—read the *Operator's Manual*; do not operate this machine unless you are trained.
2. Warning—wear hearing protection.
3. Cutting/dismemberment hazard of hand or foot, mower blade—stay away from moving parts; keep all guards and shields in place.
4. Tipping hazard—do not drive across or down slopes greater than 15 degrees.
5. Thrown object hazard—keep bystanders a safe distance from the machine.
6. Warning—lock the parking brake, shut off the engine, and remove the ignition key before leaving the machine.

Setup

Loose Parts

Use the chart below to verify that all parts have been shipped.

Procedure	Description	Qty.	Use
1	No parts required	–	Activate and charge the battery.
2	Carriage bolt (5/16 x 3/4 inch) Nut (5/16 inch)	2 2	Install the battery.
3	Bolt (1/2 x 1-3/4 inches) Bolt (1/2 x 1-1/2 inches) Nut (1/2 inch)	2 6 8	Install the roll bar.
4	Cutting unit Grass basket	3 3	Install the cutting units.
5	No parts required	–	Mark the outer grass baskets.
6	Rear Weight Kit (Part No. 100-6441)—purchase separately 19.5 kg (43 lb) of calcium chloride (purchase separately) Rear Weight Kit (Part No. 99-1645)—purchase separately if you have a 3-Wheel Drive Kit installed	1 1 1	Add the rear ballast and weight kit.
7	CE Guard Kit—Part No. 04440 (sold separately)	1	Install the CE guard kit.
8	Warning decal (Part No. 133-2339) Production year decal	1 1	Install EU decals, if required.
9	No parts required	–	Reduce the tire pressure.
10	No parts required	–	Burnish the brakes.

Media and Additional Parts

Description	Qty.	Use
Operator's Manual	1	Review it before operating the machine.
Engine owner's manual	1	Use it to reference engine information.
Operator training materials	1	Read/view the materials before operating the machine.
Declaration of Conformity Noise rating certificate	1 1	For CE compliance
Ignition keys	2	Start the engine.

1

Activating and Charging the Battery

No Parts Required

Procedure

Use only electrolyte (1.265 specific gravity) to fill battery initially.

⚠ WARNING

CALIFORNIA
Proposition 65 Warning

Battery posts, terminals, and related accessories contain lead and lead compounds, chemicals known to the State of California to cause cancer and reproductive harm. Wash hands after handling.

1. Remove the wing nuts, washers, and battery clamp and lift out the battery.

   Important: **Do not add electrolyte while the battery is in the machine. You could spill it, causing corrosion.**

2. Clean the top of the battery and remove the vent caps (Figure 3).

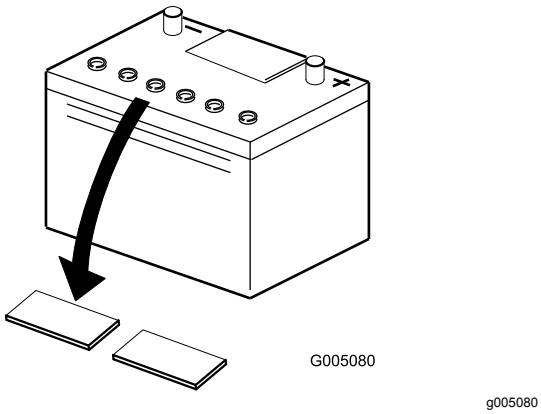

g005080

Figure 3

3. Carefully fill each cell with electrolyte until the plates are covered with about 6 mm (1/4 inch) of fluid (Figure 4).

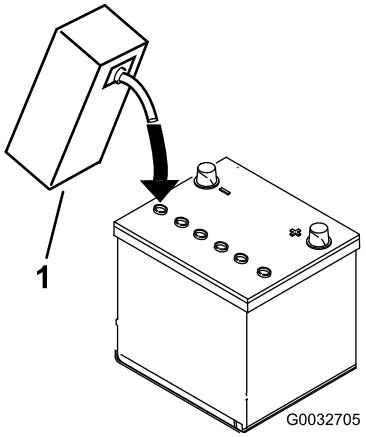

g032705

Figure 4

1. Electrolyte

4. Allow approximately 20 to 30 minutes for the electrolyte to soak into the plates. Fill as necessary to bring the electrolyte to within about 6 mm (1/4 inch) of the bottom of the fill well (Figure 4).

5. Connect a 2 to 4 A battery charger to the battery posts. Charge the battery for at least 2 hours at 4 A or for at least 4 hours at 2 A until the specific gravity is 1.250 or higher and the temperature is at least 16°C (60°F) with all cells gassing freely.

⚠ WARNING

Charging the battery produces gasses that can explode.

Never smoke near the battery and keep sparks and flames away from the battery.

Important: **If you do not charge the battery for at least the time specified above, you may reduce the life of the battery.**

6. When the battery is charged, disconnect the charger from the electrical outlet and battery posts.

Note: After the battery has been activated, add only distilled water to replace normal loss, although maintenance-free batteries should not require water under normal operating conditions.

⚠ WARNING

Battery terminals or metal tools could short against metal tractor components, causing sparks. Sparks can cause the battery gasses to explode, resulting in personal injury.

- **When removing or installing the battery, do not allow the battery terminals to touch any metal parts of the tractor.**
- **Do not allow metal tools to short between the battery terminals and metal parts of the tractor.**

Important: **Failure to correctly activate the battery may result in battery gassing and/or premature battery failure.**

7. Install the vent caps.

2

Installing the Battery

Parts needed for this procedure:

2	Carriage bolt (5/16 x 3/4 inch)
2	Nut (5/16 inch)

Procedure

1. Mount the battery with the battery terminals toward the front of the machine.
2. Connect the positive battery cable (red) from the starter solenoid to the positive post (+) of the battery (Figure 5). Secure it with a carriage bolt and nut. Make sure that the cable will clear the seat, in the rear-most position, which could cause wear or damage to the cable.

⚠ WARNING

Battery terminals or metal tools could short against metal tractor components causing sparks. Sparks can cause the battery gasses to explode, resulting in personal injury.

- **When removing or installing the battery, do not allow the battery terminals to touch any metal parts of the tractor.**
- **Do not allow metal tools to short between the battery terminals and metal parts of the tractor.**

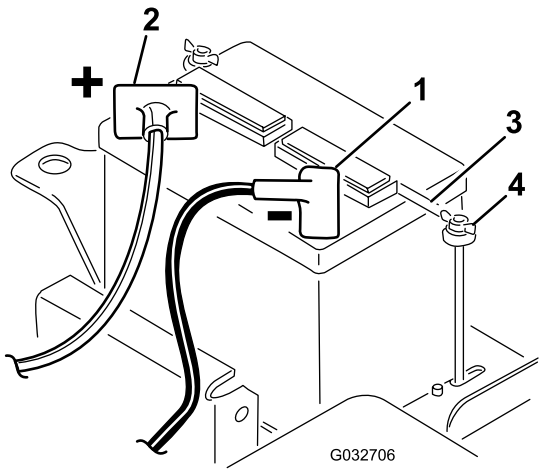

g032706

Figure 5

1. Negative (-)
2. Positive (+)
3. Battery clamp
4. Wing nut

3. Connect the black ground cable (from the engine base) to the negative (-) post of the battery. Secure it with a carriage bolt and nut.

⚠ WARNING

Incorrect battery cable routing could damage the tractor and cables, causing sparks. Sparks can cause the battery gasses to explode, resulting in personal injury.

- **Always disconnect the negative (black) battery cable before disconnecting the positive (red) cable.**
- **Always connect the positive (red) battery cable before connecting the negative (black) cable.**

4. Coat both terminals with petroleum jelly.

5. Install the battery clamp and washers and secure them with wing nuts (Figure 5).
6. Place the terminal cover over the positive (+) battery post.

3

Installing the Roll Bar

Parts needed for this procedure:

2	Bolt (1/2 x 1-3/4 inches)
6	Bolt (1/2 x 1-1/2 inches)
8	Nut (1/2 inch)

Procedure

1. Remove the screws and nuts supporting the jack pad on the right side of the machine.
2. Lower the roll bar (Figure 6) onto the mounting brackets, aligning the mounting holes.

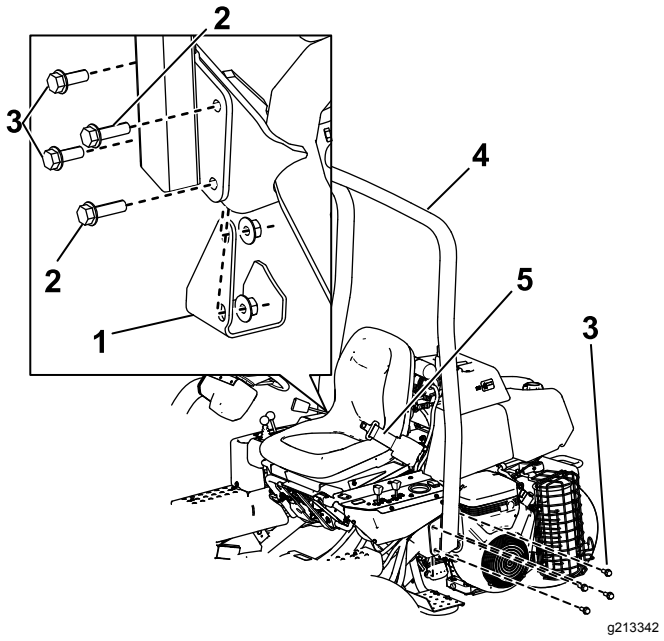

Figure 6

1. Jack pad
2. Bolt (1/2 x 1-3/4 inches)
3. Bolt (1/2 x 1-1/2 inches)
4. Roll bar
5. Seat belt

3. Secure the left side of the roll bar to the mounting bracket with 4 bolts (1/2 x 1-1/2 inches) and locknuts (Figure 6).
4. Torque the fasteners to 91 to 115 N·m (67 to 85 ft-lb).
5. Secure the right side of the roll bar and the previously removed jack pad to the mounting bracket with 2 bolts (1/2 x 1-1/2 inches)), 2 bolts (1/2 x 1-3/4 inches), and locknuts as illustrated in Figure 6.
6. Torque the fasteners to 91 to 115 N·m (67 to 85 ft-lb).

⚠ WARNING

Failure to wear the seat belt while operating the vehicle can result in you being thrown from the seat and crushed during a rollover accident.

Always use the seat belt.

4

Installing the Cutting Units

Parts needed for this procedure:

3	Cutting unit
3	Grass basket

Procedure

Important: **Do not raise the suspension to the transport position when the reel motors are in the holders on the machine frame. Damage to the motors or hoses could result.**

Note: When sharpening, setting the height of cut, or performing other maintenance procedures on the cutting units, store the cutting unit reel motors in the support tubes on the front of the frame and side of the machine to prevent damaging the hoses.

1. Remove the cutting units from the cartons. Assemble and adjust them as listed in the cutting unit *Operator's Manual*.
2. Slide the cutting unit under the pull frame while sliding the lift hook onto the lift arm (Figure 7).

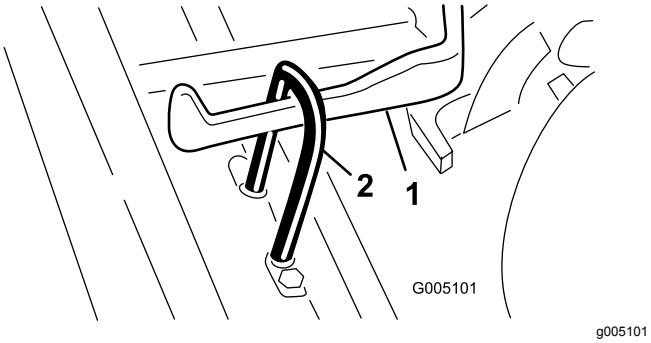

Figure 7

1. Lift arm
2. Lift hook

3. Slide the sleeve back on the ball joint receiver and hook the receiver onto the cutting unit ball stud. Release the sleeve so that it slides over the stud and locks the assemblies together (Figure 8).

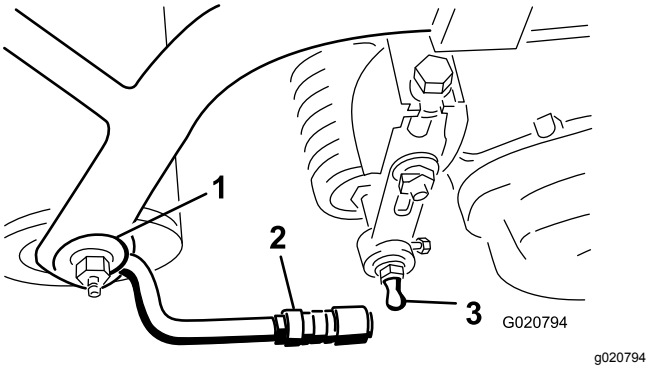

Figure 8

1. Pull frame
2. Pull arm
3. Ball stud

4. Mount the baskets on the pull frames, loosen the jam nuts on the pull arms, and adjust the ball sockets until there is 6 to 13 mm (1/4 to 1/2 inch) clearance between the lip of the basket and the reel blades.

   Note: This prevents the basket from tipping the cutting unit forward, causing the lift roller to come off the lift arm while in the mowing operation.

   Note: Ensure that the basket lip is equidistant from the reel blades all across each reel. If the basket is too close to the reel, it is possible for the reel to contact the basket when the cutting unit is raised off or lowered to the ground.

5. Align the sockets in the ball joints so the open side of the socket is centered toward the ball stud, and tighten the jam nuts to secure the sockets in position (Figure 9).

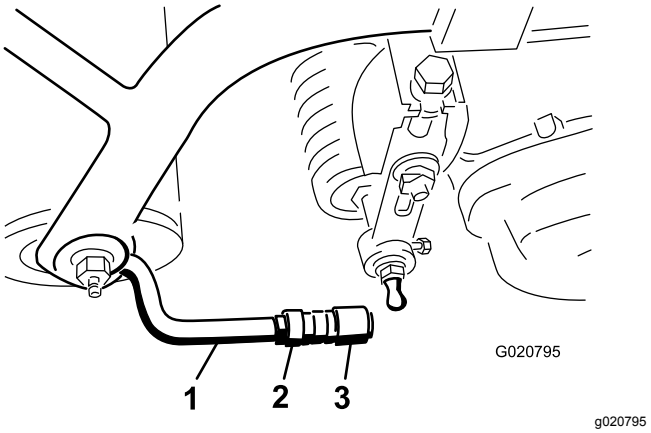

Figure 9

1. Pull arm
2. Jam nut
3. Ball joint

6. Ensure that there is approximately 13 mm (1/2 inch) of threads exposed on each reel drive motor mounting bolt (Figure 10).

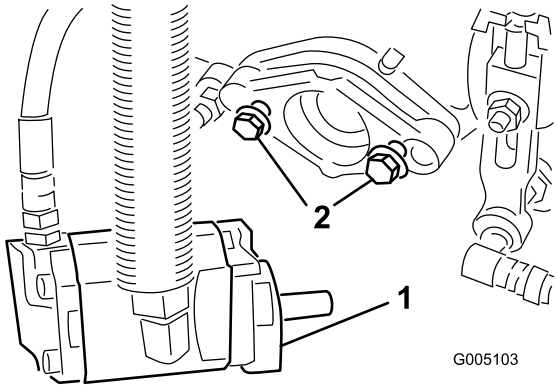

Figure 10

1. Drive motor
2. Mounting bolts

7. Coat the spline shaft of the motor with clean grease.
8. Install the motor by rotating the motor clockwise so that the motor flanges clear the studs, then rotate the motor counterclockwise until the flanges encircle the studs.
9. Tighten the mounting bolts (Figure 10).

5

Marking the Outer Grass Baskets

No Parts Required

Procedure

To assist in aligning the machine for successive cutting passes, do the following procedure to the No. 2 and No. 3 cutting unit baskets:

1. Measure in approximately 12.7 cm (5 inches) from the outer edge of each basket.
2. Either place a strip of white tape or paint a line onto each basket paralleling the outer edge of each basket (Figure 11).

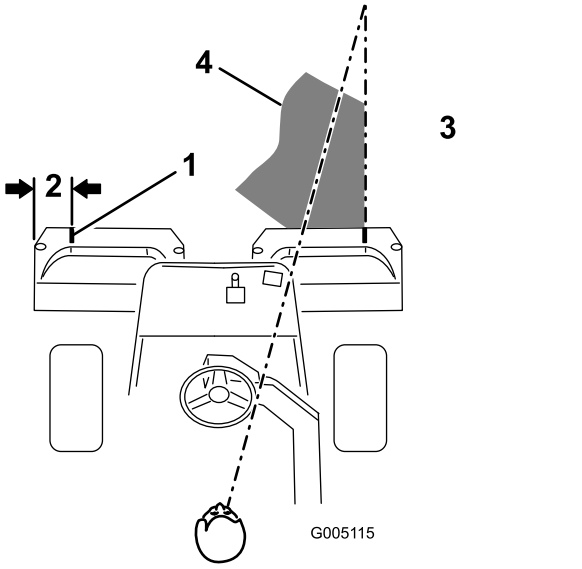

g005115

Figure 11

1. Alignment strip
2. Approximately 12.7 cm (5 inches)
3. Cut grass on right
4. Keep focal spot 1.8 to 3 m (6 to 10 ft) ahead of the machine.

6

Adding Rear Ballast and Weight Kit

Parts needed for this procedure:

1	Rear Weight Kit (Part No. 100-6441)—purchase separately
1	19.5 kg (43 lb) of calcium chloride (purchase separately)
1	Rear Weight Kit (Part No. 99-1645)—purchase separately if you have a 3-Wheel Drive Kit installed

Procedure

This unit complies with the ANSI B71.4-2012 and EN ISO 5395:2013 Standards when you equip it with rear weight kit 100-6441 and add 19.5 kg (43 lb) of calcium chloride ballast to the rear wheel. If you install a 3-Wheel Drive Kit, use Rear Weight Kit (Part No. 99-1645) instead of Part No. 100-6441.

Important: **If a puncture occurs in a tire with calcium chloride, remove the unit from the turf area as quickly as possible. To prevent possible damage to the turf, immediately soak the affected area with water.**

7

Installing the CE Guard Kit

Parts needed for this procedure:

1	CE Guard Kit—Part No. 04440 (sold separately)

Procedure

Install the CE guard kit; refer to the CE Guard Kit—Greensmaster 3150 2-Wheel Drive Traction Unit Installation Instructions.

8

Installing CE Decals

EU Only

Parts needed for this procedure:

1	Warning decal (Part No. 133-2339)
1	Production year decal

Procedure

If this machine will be used in the EU, affix the warning decal (Part No. 133-2339) over the warning decal (Part No. 133-2338). Apply the production year decal next to the regulatory decal.

9

Reducing the Tire Pressure

No Parts Required

Procedure

The tires are over-inflated at the factory for shipping purposes. Reduce the pressure to the proper levels before starting the machine. Refer to Checking the Tire Pressure (page 34).

10

Burnishing the Brakes

No Parts Required

Procedure

Firmly apply the brakes and drive the machine at mowing speed until the brakes are hot, as indicated by their smell. You may need to adjust the brakes after the break-in period; refer to Adjusting the Brakes (page 36).

Product Overview

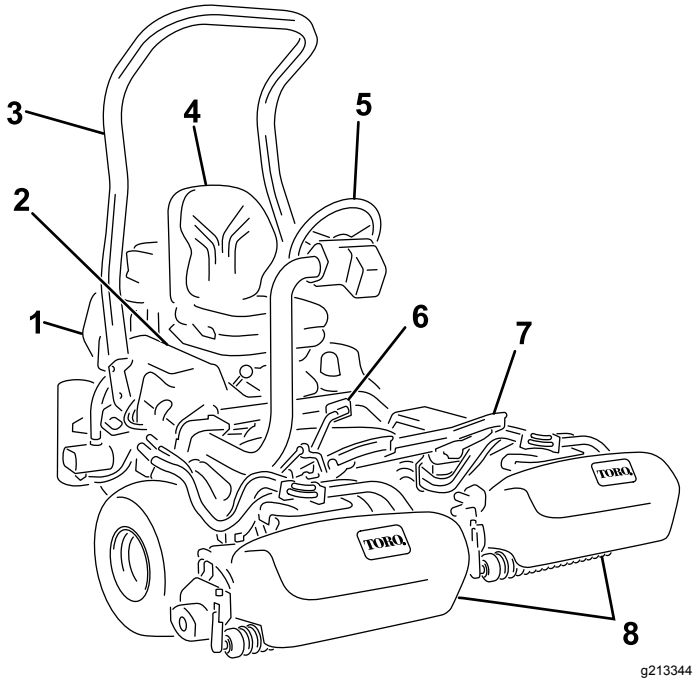

Figure 12

1. Engine
2. Control panel
3. Roll bar
4. Seat
5. Steering wheel
6. Traction pedal
7. Footrest
8. Cutting units

Controls

Traction Pedal

The traction pedal (Figure 13) has 3 functions: to make the machine move forward, to move it backward, and to stop the machine. Press the top of the pedal to move forward and the bottom of the pedal to move backward or to assist in stopping when moving forward. Also, allow the pedal to move to the NEUTRAL position to stop the machine. Do not rest the heel of your foot on reverse when operating forward (Figure 14).

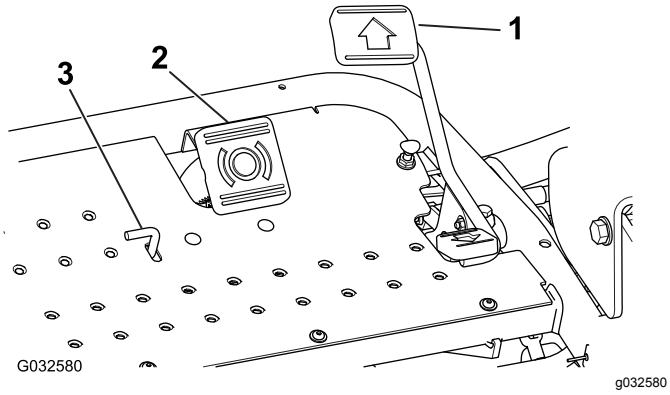

Figure 13

1. Traction pedal
2. Brake pedal
3. Parking-brake tab

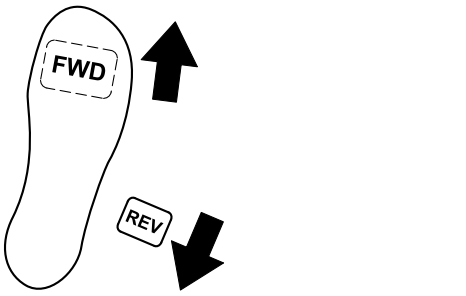

Figure 14

Brake Pedal

Press the brake pedal (Figure 13) to stop the machine by actuating the drum-type brake located at each traction wheel.

Parking-Brake Tab

To set the parking brake, press the brake pedal, then press the parking-brake tab (Figure 13) to lock the brakes. Disengage the tab by pressing the brake pedal. Lock the parking brake before you leave the machine.

Throttle Lever

The throttle lever (Figure 15) allows you to control the speed of the engine. Moving the throttle lever toward the FAST position increases the engine speed; moving the throttle lever toward the SLOW position decreases the engine speed, but does not shut off the engine.

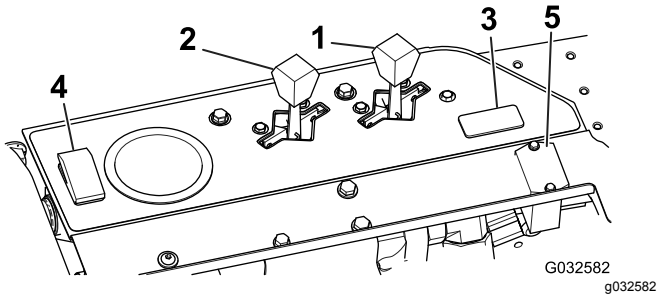

Figure 15

1. Throttle lever
2. Choke lever
3. Light-switch position
4. Leak-detector test switch
5. Hour meter

Choke Lever

To start a cold engine, close the carburetor choke by pushing the choke lever forward (Figure 15) to the CLOSED position. After the engine starts, regulate the choke lever to keep the engine running smoothly. As soon as possible, open the choke by pulling the lever rearward to the OPEN position. A warm engine requires little or no choking.

Leak-Detector Test Switch

Use the switch (Figure 15) to check the operation of the leak detector alarm and time delay.

Hour Meter

The hour meter (Figure 15) indicates the total hours the machine has operated. It starts to function whenever you rotate the key switch to the ON position.

Seat-Adjustment Lever

This lever, on the left side of the seat (Figure 16), allows you to adjust the seat 10 cm (4 inch) forward and rearward.

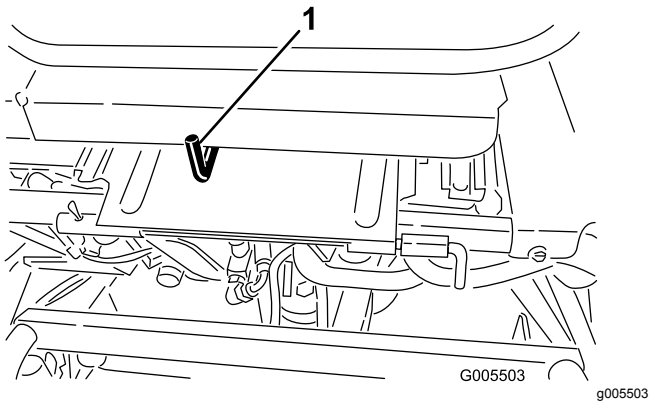

Figure 16

1. Seat-adjustment lever

Raise/Lower Mow Control

Moving the control (Figure 17) forward during operation lowers the cutting units and starts the reels. Pull back the control to stop the reels and raise the cutting units. During operation, pull back the control momentarily and release it if you need to stop the reels; start the reels again by moving the control forward.

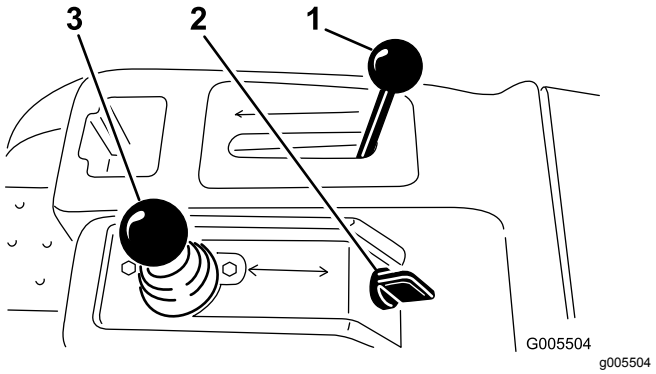

Figure 17

1. Functional-control lever
2. Ignition switch
3. Raise/lower mow control

Functional-Control Lever

The functional-control lever (Figure 17) provides 2 traction selections plus a NEUTRAL position. You can shift from mow to transport or transport to mow (not to neutral) while the machine is in motion; no damage will result.

- REAR position—neutral and backlapping
- MIDDLE position—used for mowing operation
- FRONT position—used for transport operation

Ignition Switch

Insert the key into the switch (Figure 17) and turn it clockwise as far as possible to the START position to start the engine. Release the key as soon as the engine starts; the key moves to the ON position. Turn the key counterclockwise to the OFF position to shut off the engine.

Steering-Wheel Locking Lever

Rotate the lever (Figure 18) forward to loosen the adjustment, raise or lower steering wheel for your comfort, then, rotate the lever rearward to tighten the adjustment.

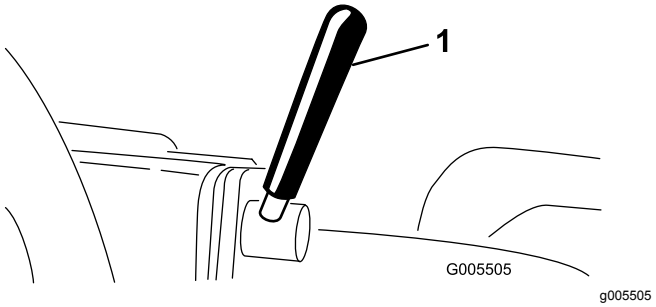

Figure 18

1. Steering-wheel locking lever

Steering-Arm Locking Knob

Loosen the knob (Figure 19) until the shoulder on the knob clears the notches in the steering arm. Raise or lower the steering arm to the desired height while aligning the shoulder of the knob with the notch in the steering arm. Tighten the knob to lock the adjustment.

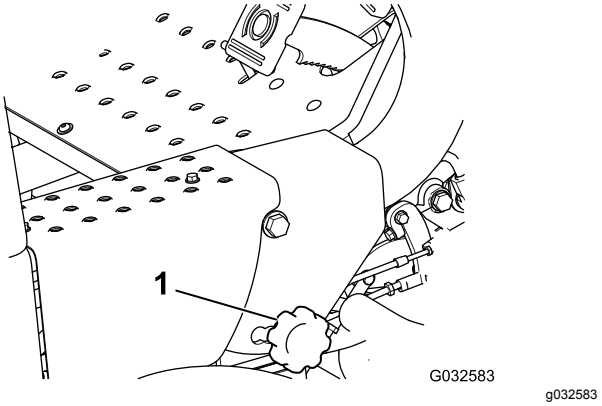

Figure 19

1. Steering-arm locking knob

Fuel-Shutoff Valve

Close the fuel-shutoff valve (Figure 20), under the fuel tank, when storing or transporting the machine on a truck or trailer.

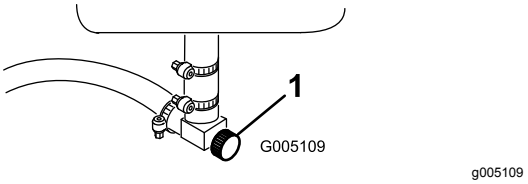

Figure 20

1. Fuel-shutoff (under the fuel tank)

Backlap Lever

Use the backlap lever (Figure 21) with the raise/lower mow control lever and the reel speed control for backlapping the reels.

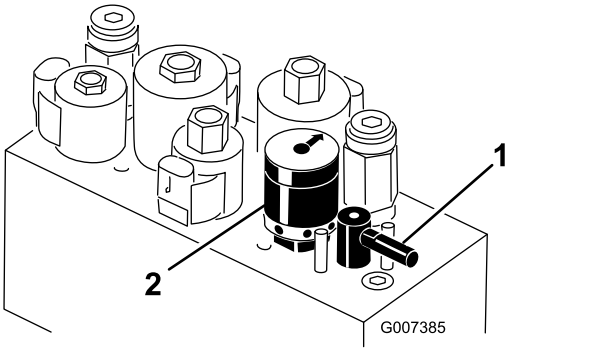

g007385

Figure 21

1. Backup lever
2. Reel-speed control

Reel-Speed Control

Use the reel-speed control (Figure 21) to adjust the speed of the reels.

Specifications

Note: Specifications and design are subject to change without notice.

Width of cut	150 cm (59 inches)
Wheel tread	126 cm (49.5 inches)
Wheel base	119 cm (46.9 inches)
Overall length	229 cm (90 inches)
Overall width	177 cm (69.75 inches)
Overall height	189 cm (74.5 inches)
Net Weight	493 kg (1,087 lb)

Attachments/Accessories

A selection of Toro approved attachments and accessories is available for use with the machine to enhance and expand its capabilities. Contact your Authorized Service Dealer or Distributor or go to www.Toro.com for a list of all approved attachments and accessories.

To best protect your investment and maintain optimal performance of your Toro equipment, count on Toro genuine parts. When it comes to reliability, Toro delivers replacement parts designed to the exact engineering specification of our equipment. For peace of mind, insist on Toro genuine parts.

Operation

Note: Determine the left and right sides of the machine from the normal operating position.

Before Operation Safety

General Safety

- Never allow children or untrained people to operate or service the machine. Local regulations may restrict the age of the operator. The owner is responsible for training all operators and mechanics.
- Become familiar with the safe operation of the equipment, operator controls, and safety signs.
- Know how to stop the machine and shut off the engine quickly.
- Check that operator-presence controls, safety switches, and shields are attached and functioning properly. Do not operate the machine unless they are functioning properly.
- Before mowing, always inspect the machine to ensure that the cutting units are in good working condition.
- Inspect the area where you will use the machine and remove all objects that the machine could throw.

Fuel Safety

- Use extreme care in handling fuel. It is flammable and its vapors are explosive.
- Extinguish all cigarettes, cigars, pipes, and other sources of ignition.
- Use only an approved fuel container.
- Never remove the fuel cap or fill the fuel tank while the engine is running or hot.
- Never refuel the machine in an enclosed space.
- Never store the machine or fuel container where there is an open flame, spark, or pilot light, such as on a water heater or other appliance.
- If you spill fuel, do not attempt to start the engine; avoid creating any source of ignition until the fuel vapors have dissipated.

Filling the Fuel Tank

- **Fuel tank capacity:** 26.6 L (7 US gallons)
- **Recommended Fuel:**
  - For best results, use only clean, fresh (less than 30 days old), unleaded gasoline with an octane rating of 87 or higher ((R+M)/2 rating method).
  - **Ethanol**: Gasoline with up to 10% ethanol (gasohol) or 15% MTBE (methyl tertiary butyl ether) by volume is acceptable. Ethanol and MTBE are not the same. Gasoline with 15% ethanol (E15) by volume is not approved for use. **Never use gasoline that contains more than 10% ethanol by volume**, such as E15 (contains 15% ethanol), E20 (contains 20% ethanol), or E85 (contains up to 85% ethanol). Using unapproved gasoline may cause performance problems and/or engine damage, which may not be covered under the warranty.
  - **Do not** use gasoline containing methanol.
  - **Do not** store fuel either in the fuel tank or fuel containers over the winter unless you use a fuel stabilizer.
  - **Do not** add oil to gasoline.

Important: **Do not use fuel additives other than a fuel stabilizer/conditioner. Do not use fuel stabilizers with an alcohol base such as ethanol, methanol, or isopropanol.**

1. Clean around the fuel-tank cap and remove it (Figure 22).

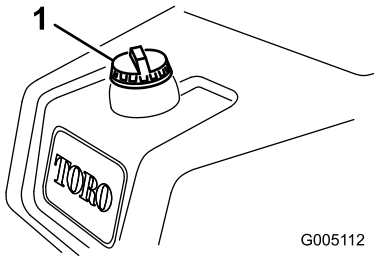

g005112

Figure 22

1. Fuel-tank cap

2. Add unleaded regular gasoline to the fuel tank until the level is 25 mm (1 inch) below the bottom of the filler neck.

   This space in the tank allows the fuel to expand. **Do not fill the fuel tank completely full.**

3. Install the cap.

   Note: You will hear a click sound when the cap is secure.

4. Wipe up any fuel that may have spilled.

Performing Daily Maintenance

Before starting the machine each day, perform the following procedures:

- Check the engine-oil level—refer to Checking the Engine Oil (page 31).

- Check the hydraulic-fluid level—refer to Checking the Hydraulic-Fluid Level (page 38).
- Check the reel-to-bedknife contact—refer to Checking the Reel-to-Bedknife Contact (page 42).
- Check the tire pressure—refer to Checking the Tire Pressure (page 34).

During Operation Safety

General Safety

- The owner/operator can prevent and is responsible for accidents that may cause personal injury or property damage.
- Wear appropriate clothing, including eye protection; slip-resistant, substantial foot protection; and hearing protection. Tie back long hair and do not wear jewelry.
- Do not operate the machine while ill, tired, or under the influence of alcohol or drugs.
- Never carry passengers on the machine and keep bystanders and pets away from the machine during operation.
- Operate the machine only in good visibility to avoid holes or hidden hazards.
- Avoid mowing on wet grass. Reduced traction could cause the machine to slide.
- Before you start the engine, ensure that all drives are in neutral, the parking brake is engaged, and you are in the operating position.
- Keep your hands and feet away from the cutting units. Keep clear of the discharge opening at all times.
- Look behind and down before backing up to be sure of a clear path.
- Use care when approaching blind corners, shrubs, trees, or other objects that may obscure your vision.
- Do not mow near drop-offs, ditches, or embankments. The machine could suddenly roll over if a wheel goes over the edge or if the edge gives way.
- Stop the cutting units whenever you are not mowing.
- Stop the machine and inspect the cutting units after striking an object or if there is an abnormal vibration in the machine. Make all necessary repairs before resuming operation.
- Slow down and use caution when making turns and crossing roads and sidewalks with the machine. Always yield the right-of-way.
- Disengage the drive to the cutting unit and shut off the engine before adjusting the height of cut (unless you can adjust it from the operating position).
- Never run an engine in an area where exhaust gasses are enclosed.
- Never leave a running machine unattended.
- Before leaving the operating position (including to empty the catchers or to unclog the chute), do the following:
  - Park the machine on level ground.
  - Disengage the power take-off and lower the attachments.
  - Engage the parking brake.
  - Shut off the engine and remove the key.
  - Wait for all moving parts to stop.
- Do not operate the machine when there is the risk of lightning.
- Do not use the machine as a towing vehicle.
- Use accessories, attachments, and replacement parts approved by The Toro® Company only.

Rollover Protection System (ROPS) Safety

- **Do not** remove the ROPS from the machine.
- Ensure that the seat belt is attached and that you can release it quickly in an emergency.
- Always wear your seat belt if your machine has a fixed roll bar.
- Check carefully for overhead obstructions and do not contact them.
- Keep the ROPS in safe operating condition by thoroughly inspecting it periodically for damage and keeping all the mounting fasteners tight.
- Replace a damaged ROPS. Do not repair or alter it.

Slope Safety

- Slow down the machine and use extra care on hillsides. Travel up and down on hillsides. Turf conditions can affect the stability of the machine.
- Avoid turning the machine on slopes. If you must turn the machine, turn it slowly and gradually downhill, if possible.
- Do not turn the machine sharply. Use care when reversing the machine.
- Use extra care while operating the machine with attachments; they can affect the stability of the machine.

Breaking in the Machine

Refer to the engine manual supplied with the machine for oil change and maintenance procedures recommended during the break-in period.

Only 8 hours of mowing operation is required for the break-in period.

Since the first hours of operation are critical to future dependability of the machine, monitor its functions and performance closely so that minor difficulties, which could lead to major problems, are noted and can be corrected. Inspect the machine frequently during break-in for signs of oil leakage, loose fasteners, or any other malfunction.

Starting the Engine

Note: Inspect the area beneath the mowers to be certain they are clear of debris.

1. Sit on the seat, ensure that the parking brake is engaged, disengage the raise/lower mow control, and move the functional control lever to the NEUTRAL position.
2. Ensure that your foot is not on the traction pedal and make sure the pedal is in the NEUTRAL position.
3. Move the choke lever to the ON position (only when starting a cold engine) and the throttle lever to the HALF THROTTLE position.
4. Start the engine and regulate the choke to keep it running smoothly.
5. As soon as possible, open the choke by pulling it rearward to the OFF position.

   Note: A warm engine requires little or no choking.
6. Check the machine out with the following procedures after the engine has started:
   A. Move the throttle lever to the FAST position.
   B. Move the traction-control lever to the MOW position and momentarily engage the reels by moving the raise/lower mow-control lever forward.

      The cutting units should drop and all the reels should rotate.
   C. Move the raise/lower mow control lever rearward until the cutting units raise to the full transport position.

      The cutting units stop rotating as soon as they start to lift. If you release the lever before the cutting units are fully raised, the upward motion stops, but the cutting units still stop rotating.
   D. Lock the parking brake and shut off the engine.
   E. Check the lip of each basket to ensure it is not in contact with the reel during operation.

      If you see signs of contact, adjust the pull arms; refer to 4 Installing the Cutting Units (page 12).
   F. Check for oil leaks and tighten the hydraulic fittings if any are found.

      Note: When the machine is new and the bearings and reels are tight, it is necessary to use the FAST throttle lever position for this check. A fast throttle setting may not be required after the break-in period.

      Note: If oil leaks continue to appear, contact your Authorized Toro Distributor for assistance and, if necessary, replacement parts.

      Important: **A trace of oil on the motor or wheel seals is normal. Seals require a small amount of lubrication to perform properly.**

Shutting Off the Engine

1. Move the throttle lever to the SLOW position, disengage the raise/lower mow control, and move the functional-control lever to the NEUTRAL position.
2. Rotate the ignition key to the OFF position to shut off the engine. Remove the key from the switch to prevent accidental starting.
3. Close the fuel shut-off valve before storing the machine.

Checking the Safety-Interlock System

⚠ CAUTION

If the safety interlock switches are disconnected or damaged the machine could operate unexpectedly causing personal injury.

- **Do not tamper with the interlock switches.**
- **Check the operation of the interlock switches daily and replace any damaged switches before operating the machine.**

The purpose of the safety-interlock system is to prevent operation of the machine where there is

possible injury to the operator or damage to the machine.

The safety-interlock system prevents the engine from starting unless:

- The traction pedal is in the NEUTRAL position.
- The functional-control lever is in the NEUTRAL position.

The safety-interlock system prevents the machine from moving unless:

- The parking brake is disengaged.
- The operator is seated.
- The functional-control lever is in the MOW position or the TRANSPORT position.

The safety-interlock system prevents the reels from operating unless the functional-control lever is in the MOW position.

Perform the following system checks daily to ensure that the interlock system is operating correctly:

1. Sit on the seat, move the traction pedal to the NEUTRAL position, move the functional-control lever to the NEUTRAL position, and engage the parking brake.
2. Try to press the traction pedal.

   The pedal should not press, which means that the interlock system is operating correctly. Correct the problem if it is not operating properly.
3. Sit on the seat, move the traction pedal to the NEUTRAL position, move the functional-control lever to the NEUTRAL position, and engage the parking brake.
4. Move the functional-control lever to the MOW position or the TRANSPORT position and try to start the engine.

   The engine should not turn-over or start, which means that the interlock system is operating correctly. Correct the problem if it is not operating properly.
5. Sit on the seat, move the traction pedal to the NEUTRAL position, move the functional-control lever to the NEUTRAL position, and engage the parking brake.
6. Start the engine and move the functional-control lever to the MOW position or the TRANSPORT position.

   The engine should shut off, which means that the interlock system is operating correctly.

   Correct the problem if it is not operating properly.
7. Sit on the seat, move the traction pedal to the NEUTRAL position, move the functional control lever to the NEUTRAL position, and engage the parking brake.
8. Start the engine.
9. Release the parking brake, move the functional control lever to the MOW position, and rise from the seat.

   The engine should shut off, which means that the interlock system is operating correctly. Correct the problem if it is not operating properly.
10. Sit on the seat, move the traction pedal to the NEUTRAL position, move the functional control lever to the NEUTRAL position, and engage the parking brake.
11. Start the engine.
12. Move the raise/lower mow control forward to lower the cutting units. The cutting units should lower but not start rotating.

    If they start rotating, the interlock system is not operating correctly; correct the problem before operating the machine.

Driving the Machine without Mowing

Ensure that the cutting units are fully raised. Move the functional-control lever to the TRANSPORT position. Use the brakes to slow the machine while going down steep hills to avoid loss of control. Always approach rough areas at a reduced speed and cross severe undulations carefully. Familiarize yourself with the width of the machine. Do not attempt to pass between objects that are close together so that costly damage and down time can be prevented.

Mowing

Before mowing greens, find a clear area and practice starting and stopping the machine, raising and lowering the cutting units, turning, etc.

Inspect the green for debris, remove the flag from the cup, and determine the best direction to mow. Base the direction to mow on the previous mowing direction. Always mow in an alternate pattern from the previous mowing so that the grass blades are less apt to lay down and therefore be difficult to trap between the reel blades and the bedknife.

1. Approach the green with the functional-control lever in the MOW position and the throttle at full speed.
2. Start on 1 edge of the green so that you can use the ribbon procedure of cutting.

   Note: This holds compaction to a minimum and leaves a neat, attractive pattern on the greens.

3. Actuate the raise/lower mow lever as the front edges of the grass baskets cross the outer edge of the green.

   Note: This procedure drops the cutting units to the turf and starts the reels.

   Important: **The No. 1 cutting unit reel is delayed; therefore, you should practice to gain the required timing necessary to minimize the cleanup mowing operation.**

4. Overlap a minimal amount with the previous cut on return passes.

   Note: To assist in maintaining a straight line across the green and keep the machine an equal distance from the edge of the previous cut, establish an imaginary sight line approximately 1.8 to 3 m (6 to 10 ft) ahead of the machine to the edge of the uncut portion of the green (Figure 23). Some find it useful to include the outer edge of the steering wheel as part of the sight line; i.e. keep the steering wheel edge aligned with a point that is always kept the same distance away from the front of the machine.

5. As the front edges of the baskets cross the edge of the green, move the raise/lower mow lever rearward and hold it until all the cutting units have risen. This stops the reels and lifts the cutting units.

   Note: It is important to time this step correctly so that you do not cut into the fringe area yet cut as much of the green as possible to minimize the amount of grass left to mow around the outer periphery.

6. To cut down on operating time and ease lineup for the next pass, momentarily turn the machine in the opposite direction, then turn it in the direction of the uncut portion; i.e., if intending to turn right, first swing slightly left, then right.

   Note: This helps to get the machine more quickly aligned for the next pass. Try to make as short of a turn as possible except during warmer weather when a wider arc minimizes the turf bruising.

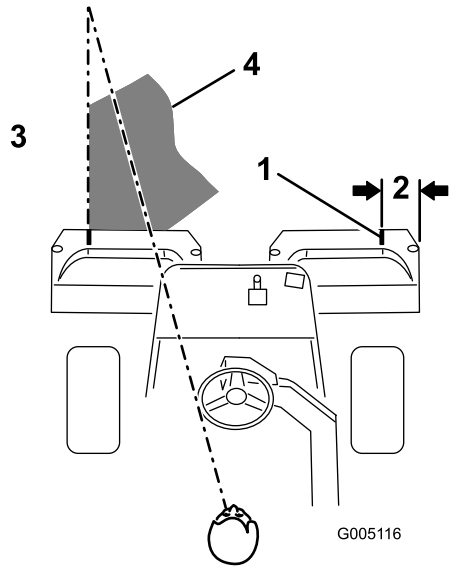

g005116

Figure 23

1. Alignment strip
2. Approximately 12.7 cm (5 inches)
3. Cut grass on the left
4. Keep a focal spot 2 to 3 m (6 to 10 ft) ahead of the machine.

   Note: Due to the nature of the power steering system, the steering wheel does not return to its original position after you complete a turn.

   Important: **Never stop the machine on a green with the cutting unit reels operating as damage to the turf may result. Stopping the machine on a wet green may leave marks or indentations from the wheels.**

7. If the leak detector alarm (if equipped on your model) sounds or you notice an oil leak while cutting on a green, immediately raise the cutting units, drive directly off the green, and stop the machine in an area away from the green. Determine the cause of the leak and correct the problem.

8. Finish cutting the green by mowing the outer periphery. Be sure to change the direction of cutting from the previous mowing.

   Note: Always keep weather and turf conditions in mind and be sure to change the direction of mowing from the previous cutting.

9. When finished mowing the outer periphery, tap the raise/lower mow lever rearward to stop the reels, then drive off the green. When all of the cutting units are off of the green, raise them.

   Note: This minimizes grass clumps left on the green.

10. Replace the flag.

11. Empty the grass baskets of all clippings before transporting to the next green.

Note: Heavy wet clippings place an undue strain on the baskets and add unnecessary weight to the machine, thereby increasing the load on the engine, hydraulic system, brakes, etc.

After Operation Safety

General Safety

- Clean grass and debris from the cutting units, drives, mufflers, cooling screens, and engine to help prevent fires. Clean up oil or fuel spills.
- Shut off the fuel while storing or transporting the machine.
- Disengage the drive to the attachment whenever you are transporting or not using the machine.
- Allow the engine to cool before storing the machine in any enclosure.
- Never store the machine or fuel container where there is an open flame, spark, or pilot light, such as on a water heater or on other appliances.

Towing Safety

- Tow only with a machine that has a hitch designed for towing. Do not attach towed equipment except at the hitch point.
- Follow the manufacturer's recommendation for weight limits for towed equipment and towing on slopes. On slopes, the weight of the towed equipment may cause loss of traction and loss of control.
- Never allow children or others in or on towed equipment.
- Travel slowly and allow extra distance to stop when towing.

Inspecting and Cleaning after Mowing

After mowing, thoroughly wash the machine with a garden hose without a nozzle so that excessive water pressure does not contaminate and damage the seals and bearings. **Do not wash a warm engine or electrical connections with water.**

After cleaning, inspect the machine for possible hydraulic fluid leaks, damage or wear to hydraulic and mechanical components, and the cutting units for sharpness. Also, lubricate the brake-shaft assembly with SAE 30 oil or spray lubricant to deter corrosion and help keep the machine performing satisfactorily during the next mowing operation.

Hauling the Machine

- Use care when loading or unloading the machine into a trailer or a truck.
- Use full-width ramps for loading the machine into a trailer or a truck.
- Tie the machine down securely using straps, chains, cable, or ropes. Both front and rear straps should be directed down and outward from the machine.

Towing the Machine

In case of an emergency, you can tow the machine for a short distance, less than 0.4 km (1/4 mile); however, Toro does not recommend this as standard procedure.

Important: **Do not tow the machine faster than 3 to 5 km/h (2 to 3 mph) because the drive system may be damaged. If the machine must be moved a considerable distance, transport it on a truck or trailer.**

1. Locate the bypass valve on the pump and rotate it so that the slot is vertical (Figure 24).

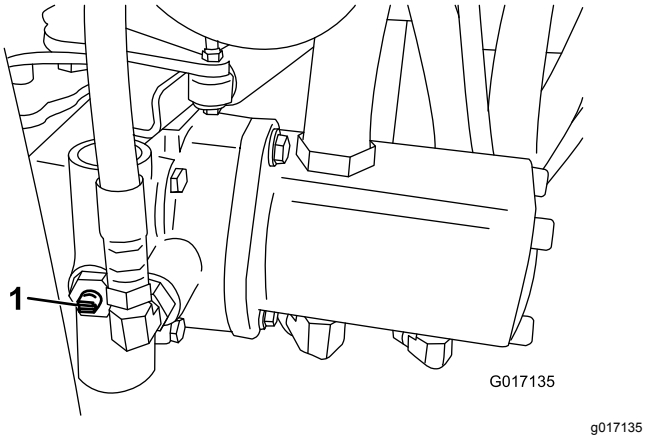

Figure 24

1. Bypass valve-slot shown in closed (horizontal) position

2. Before starting the engine, close the bypass valve by rotating it so that the slot is horizontal (Figure 24). Do not start the engine when the valve is open.

Maintenance

⚠ WARNING

Failure to properly maintain the machine could result in premature failure of machine systems causing possible harm to you or bystanders.

Keep the machine well maintained and in good working order as indicated in these instructions.

Note: Determine the left and right sides of the machine from the normal operating position.

Note: Download a free copy of the electrical or hydraulic schematic by visiting www.Toro.com and searching for your machine from the Manuals link on the home page.

Important: **Refer to your engine owner's manual for additional maintenance procedures.**

⚠ CAUTION

If you leave the key in the ignition switch, someone could accidently start the engine and seriously injure you or other bystanders.

Remove the key from the ignition and disconnect the wires from the spark plugs before you do any maintenance. Set the wires aside so that they do not accidentally contact the spark plugs.

Recommended Maintenance Schedule(s)

Maintenance Service Interval	Maintenance Procedure
After the first hour	• Torque the wheel nuts.
After the first 10 hours	• Torque the wheel nuts.
After the first 25 hours	• Change the engine oil and filter.
After the first 50 hours	• Ensure that the battery hold-down fasteners are tight. • Change the hydraulic-fluid filter. • Check the engine speed (at idle and full throttle).
Before each use or daily	• Check the safety-interlock system. • Inspect and cleanup after mowing. • Check the engine oil. • Check the tire pressure. • Check the hydraulic fluid level. • Check the hydraulic lines and hoses. • Check the reel-to-bedknife contact.
Every 50 hours	• Grease the machine. (Immediately after every washing) • Service the air-cleaner foam element (more frequently when operating conditions are dusty or dirty). • Check the battery electrolyte level. • Check the battery cable connections.
Every 100 hours	• Service the air-cleaner paper element (more frequently when operating conditions are dusty or dirty). • Change the engine oil and filter.
Every 200 hours	• Torque the wheel nuts.

Maintenance Service Interval	Maintenance Procedure
Every 800 hours	• Replace the spark plugs. • Replace the fuel filter. (Sooner if the fuel flow is restricted) • Change the hydraulic fluid, filter, and tank breather. • Check the engine speed (at idle and full throttle). • Check the valve clearance.
Every 2 years	• Check the fuel lines and connections. • Replace moving hoses.

Daily Maintenance Checklist

Duplicate this page for routine use.

Maintenance Check Item	For the week of:						
	Mon.	Tues.	Wed.	Thurs.	Fri.	Sat.	Sun.
Check the safety-interlock operation.							
Check the instrument operation							
Check the leak-detector alarm.							
Check the brake operation.							
Check the fuel level.							
Check the hydraulic-fluid level.							
Check the engine-oil level.							
Clean the engine-air-cooling fins.							
Inspect the air-filter pre-cleaner.							
Check any unusual engine noises.							
Check the reel-to-bedknife adjustment.							
Check the hydraulic hoses for damage.							
Check for fluid leaks.							
Check the tire pressure.							
Check the height-of-cut adjustment.							
Lubricate all grease fittings.[1]							
Lubricate the mow, lift, and brake linkage.							
Touch-up damaged paint.							
1. Immediately after every washing, regardless of the interval listed.							

Notation for Areas of Concern

Inspection performed by:		
Item	**Date**	**Information**

Pre-Maintenance Procedures

Pre-Maintenance Safety

- Before adjusting, cleaning, repairing, or leaving the machine, do the following:
  - Park the machine on a level surface.
  - Move the throttle switch to the low-idle position.
  - Disengage the cutting units.
  - Lower the cutting units.
  - Ensure that the traction is in neutral.
  - Engage the parking brake.
  - Shut off the engine and remove the key.
  - Wait for all moving parts to stop.
  - Allow machine components to cool before performing maintenance.
- If the cutting units are in the transport position, use the positive mechanical lock (if available) before you leave the machine unattended.
- If possible, do not perform maintenance while the engine is running. Keep away from moving parts.
- Use jack stands to support the machine or components when required.
- Carefully release pressure from components with stored energy.

Removing the Seat Assembly

You may remove the seat assembly to access the valve block area of the machine.

1. Unlatch and raise the seat, securing it with the prop rod.
2. Disconnect the 2 wire-harness connectors under the seat.
3. Lower the seat and remove the roll pin securing the seat-pivot rod to the frame (Figure 25).

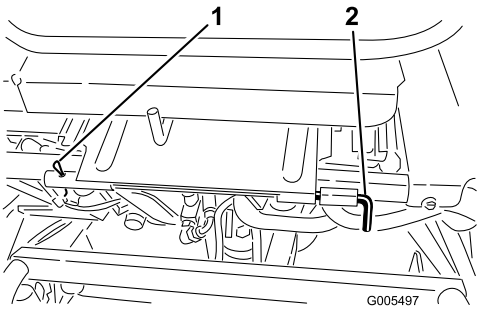

g005497

Figure 25

1. Roll pin
2. Seat-pivot rod

4. Slide the seat-pivot rod to the left side, slide the seat forward, and lift the seat out.
5. Reverse the procedure to install the seat.

Note: If you remove the seat assembly frequently, you can replace the roll pin with an R-key pin (Part No. 3290-467).

Raising the Machine

⚠ CAUTION

If the machine is not properly supported, it could fall, crushing you or others.

Before servicing, support the machine with jack stands or blocks of wood.

Before raising the machine, lower the cutting units. The jacking points are as follows:

- Right side—under the jack pad and adjacent to the ROPS-support bracket (Figure 26)
- Left side—under the step
- Rear—at the caster fork

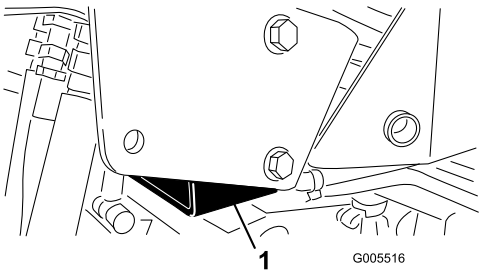

g005516

Figure 26

1. Jack pad

Lubrication

Greasing the Machine

Service Interval: Every 50 hours (Immediately after every washing)

Lubricate the grease fittings regularly with No. 2 lithium grease.

Locate the grease fitting as follows:

- Rear-roller-hub assembly or, if equipped with a 3-wheel-drive kit, rear-wheel-roller clutches and external ball bearing (1) (Figure 27)

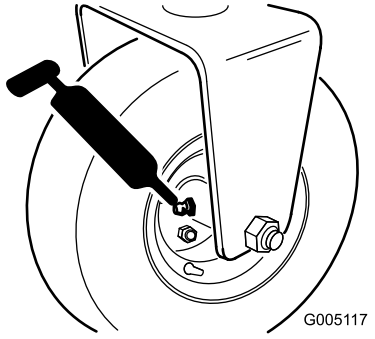

g005117

Figure 27

- Steering-fork shaft (1) (Figure 28)
- Steering-cylinder-rod end (Figure 28)

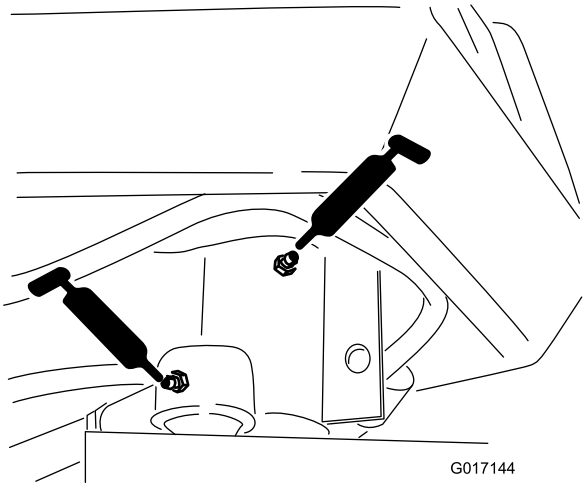

g017144

Figure 28

- Lift-arm pivot (3) and pivot hinge (3) (Figure 29)

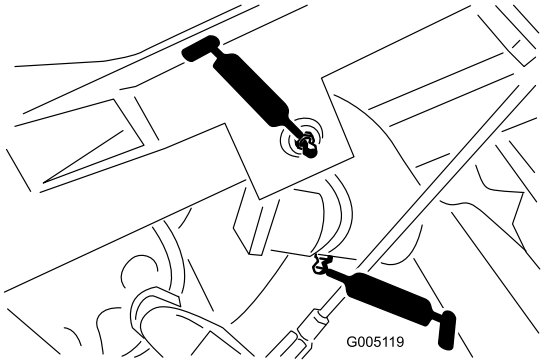

g005119

Figure 29

- Pull-frame shaft and roller (12) (Figure 30)

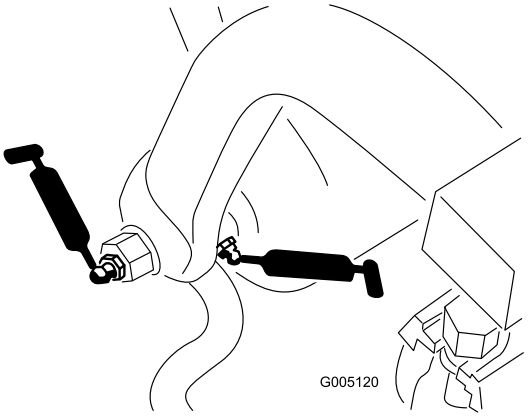

g005120

Figure 30

- Steering-cylinder end (Figure 31)

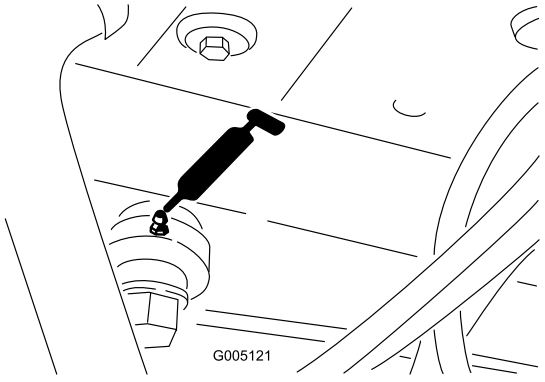

g005121

Figure 31

- Lift cylinders (3) (Figure 32)

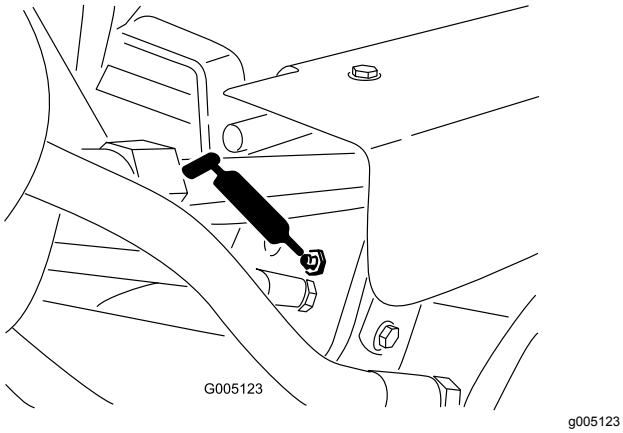

Figure 32

- Traction pedal (Figure 33)

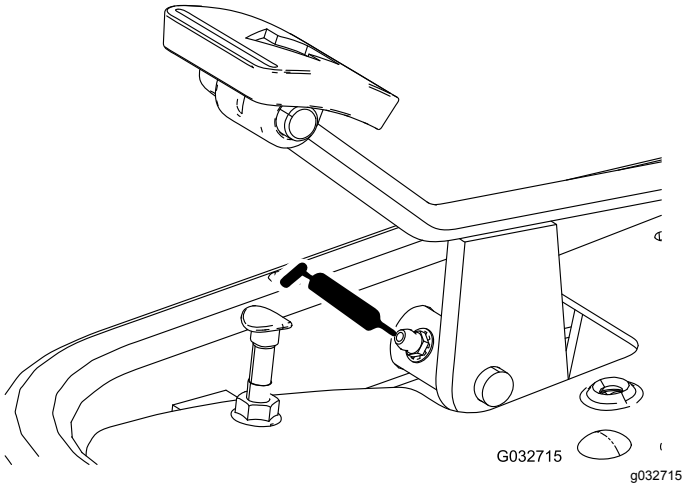

Figure 33

- Speed-selector linkage (Figure 34 and Figure 35)

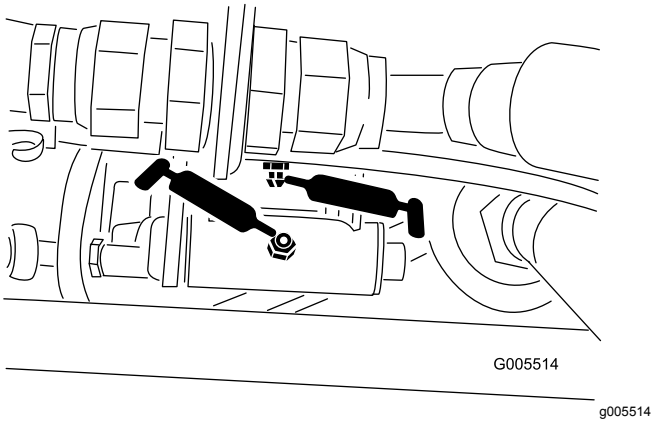

Figure 34

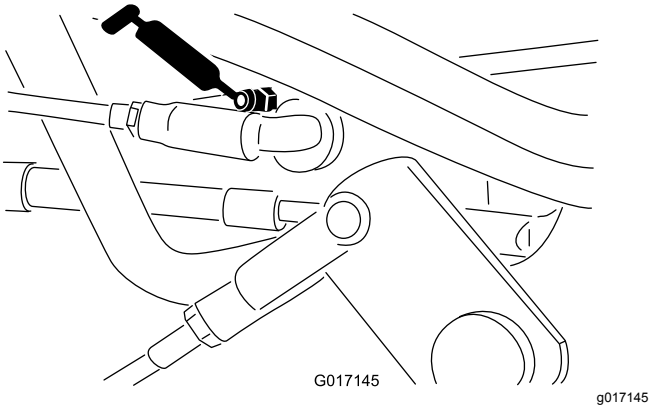

Figure 35

To grease the machine, complete the following procedure:

1. Wipe the grease fitting clean so foreign matter cannot be forced into the bearing or bushing.
2. Pump grease into the bearing or bushing until the grease is visible. Wipe up excess grease.
3. Apply grease to the reel motor spline shaft and onto the lift arm when the cutting unit is removed for service.
4. Apply a few drops of SAE 30 engine oil or spray lubricant (WD 40) to all pivot points daily after cleaning.

Engine Maintenance

Engine Safety

- Shut off the engine before checking the oil or adding oil to the crankcase.
- Do not change the governor speed or overspeed the engine.

Servicing the Air Cleaner

Service Interval: Every 50 hours—Service the air-cleaner foam element (more frequently when operating conditions are dusty or dirty).

Every 100 hours—Service the air-cleaner paper element (more frequently when operating conditions are dusty or dirty).

1. Clean the cover thoroughly (Figure 36).

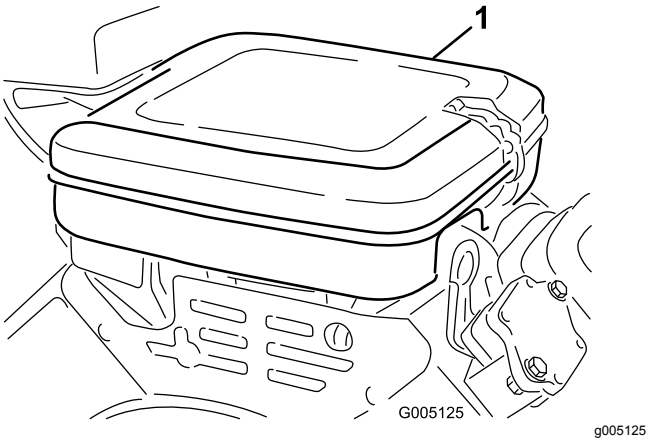

Figure 36

1. Air-cleaner cover

2. Release the locking clips and remove the air-cleaner cover.
3. Remove the wing nut securing the elements to the air-cleaner body (Figure 37).
4. If the foam element is dirty, remove it from the paper element (Figure 37). Clean it thoroughly, as follows:
   A. Wash the foam element in a solution of liquid soap and warm water. Squeeze it to remove dirt, but do not twist it because the foam may tear.
   B. Dry it by wrapping it in a clean rag. Squeeze the rag and foam element dry.

   Important: **Do not twist the foam element when drying it.**

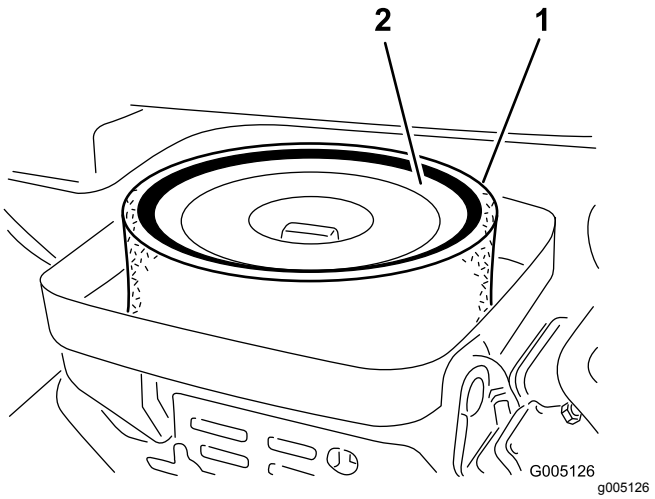

Figure 37

1. Foam element
2. Paper element

5. When servicing the foam element, check the condition of the paper element. Clean it by gently tapping it on a flat surface or replace it if needed.
6. Install the foam element, paper element, wing nut, and air-cleaner cover.

   Important: **Do not operate the engine without the air cleaner element because extreme engine wear and damage will likely result.**

Servicing the Engine Oil

Checking the Engine Oil

Service Interval: Before each use or daily

The engine is shipped with 1.4 L (1.5 US qt) (with filter) of oil in the crankcase; however, you must check the oil level before and after starting the engine the first time.

The engine uses any high-quality detergent oil having the American Petroleum Institute (API) service classification of SG, SH, or SJ or higher. The recommended viscosity (weight) is SAE 30.

1. Position the machine on a level surface, set the parking brake, shut off the engine, and remove the key. Wait a few minutes before checking the oil.
2. Pull the dipstick out and wipe it with a clean rag. Push the dipstick into the tube and make sure that it is seated fully (Figure 38).

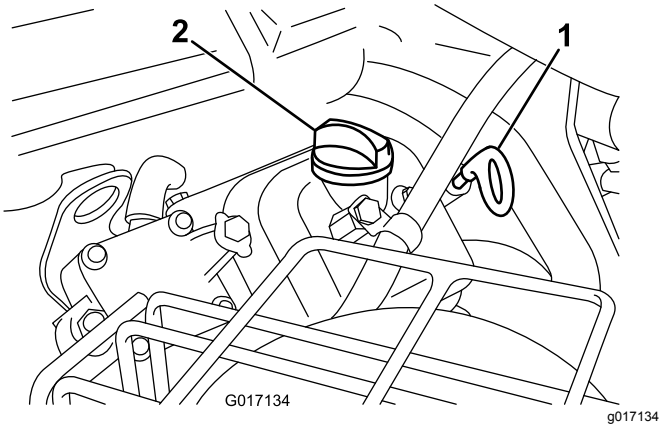

Figure 38

1. Dipstick
2. Filler cap

3. Pull the dipstick out of the tube and check the oil level.
4. If the oil level is low, remove the filler cap from the valve cover and pour oil into the opening in the valve cover until the oil level is within the hatch marks on the dipstick. Add the oil slowly and check the level often during this process. **Do not overfill.**
5. Install the filler cap and dipstick firmly in place.

Changing the Engine Oil and Filter

Service Interval: After the first 25 hours

Every 100 hours

1. Remove the drain plug (Figure 39) and let the oil flow into a drain pan. When the oil stops, install the drain plug.

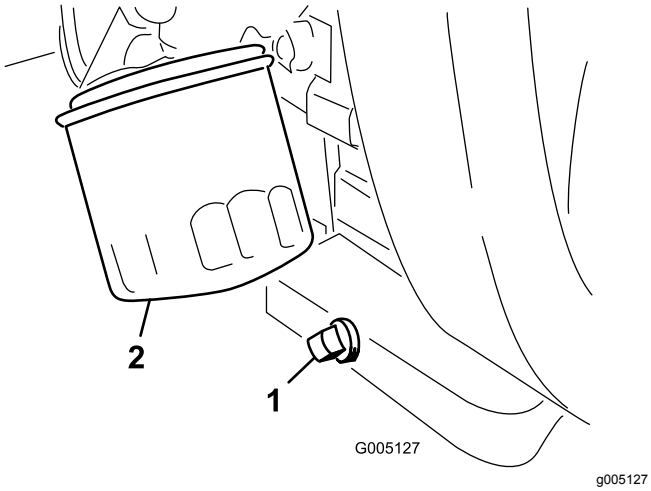

Figure 39

1. Drain plug
2. Oil filter

2. Remove the oil filter (Figure 39).
3. Apply a light coat of clean oil to the new filter gasket.
4. Screw the filter on by hand until the gasket contacts the filter adapter, then tighten it 3/4 to 1 turn further. **Do not overtighten it**.
5. Add oil to the crankcase; refer to Checking the Engine Oil (page 31).
6. Dispose of the oil filter and used oil properly.

Replacing the Spark Plugs

Service Interval: Every 800 hours

The recommended air gap is 0.76 mm (0.030 inch)

The correct spark plug to use is a Champion RC 14YC.

Note: The spark plug usually lasts a long time; however, remove and check the plugs whenever the engine malfunctions.

1. Clean the area around the spark plugs so foreign matter cannot fall into the cylinder.
2. Pull the wires off the spark plugs and remove the plugs.
3. Check the condition of the side electrode, center electrode, and center electrode insulator to ensure that there is no damage.

   Important: **Replace a cracked, fouled, dirty, or otherwise malfunctioning spark plug. Do not sand blast, scrape, or clean electrodes by using a wire brush because grit may eventually release from the plug, fall into the cylinder, and damage the engine.**
4. Set the air gap between the center and side of the electrodes at 0.76 mm (0.030 inch) as shown in Figure 40.

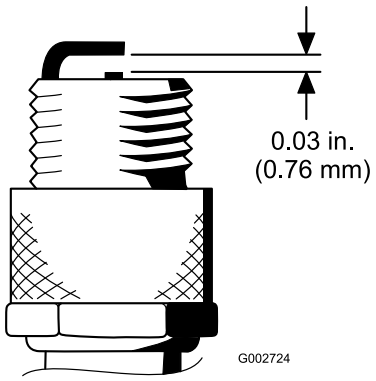

Figure 40

5. Install the correctly-gapped spark plug with a gasket seal, and tighten the plug to 23 N·m (200 in-lb). If you do not have a torque wrench, tighten the plug firmly.

Fuel System Maintenance

Replacing the Fuel Filter

Service Interval: Every 800 hours (Sooner if the fuel flow is restricted)

An in-line filter is incorporated into the fuel line between the fuel tank and carburetor (Figure 41).

⚠ DANGER

In certain conditions, fuel is extremely flammable and highly explosive. A fire or explosion from fuel can burn you and others and can damage property.

- **Drain fuel from the fuel tank when the engine is cold. Do this outdoors in an open area. Wipe up any fuel that spills.**
- **Never smoke when draining fuel, and stay away from an open flame or where a spark may ignite the fumes.**

1. Close the fuel-shutoff valve, loosen the hose clamp on the carburetor side of filter, and remove the fuel line from the filter (Figure 41).

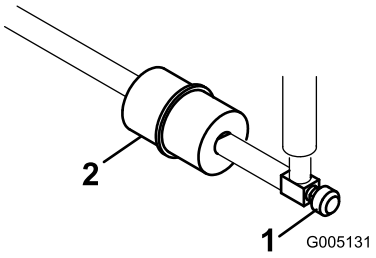

g005131

Figure 41

1. Fuel-shutoff valve
2. Fuel filter

2. Place a drain pan under the filter, loosen the remaining hose clamp and remove the filter (Figure 41).
3. Install the new filter with the arrow on the filter body pointing away from the fuel tank.

Inspecting the Fuel Lines and Connections

Service Interval: Every 2 years

Inspect the fuel lines for deterioration, damage, or loose connections.

Electrical System Maintenance

Electrical System Safety

- Disconnect the battery before repairing the machine. Disconnect the negative terminal first and the positive last. Connect the positive terminal first and the negative last.
- Charge the battery in an open, well-ventilated area, away from sparks and flames. Unplug the charger before connecting or disconnecting the battery. Wear protective clothing and use insulated tools.

WARNING

CALIFORNIA
Proposition 65 Warning

Battery posts, terminals, and related accessories contain lead and lead compounds, chemicals known to the State of California to cause cancer and reproductive harm. Wash hands after handling.

Servicing the Battery

Properly maintain the battery electrolyte and keep the top of the battery clean. Store the machine in a cool place to prevent the battery from running down.

Check the electrolyte level every 50 operating hours or, if machine is in storage, every 30 days.

⚠ DANGER

Battery electrolyte contains sulfuric acid which is a deadly poison and causes severe burns.

- **Do not drink electrolyte and avoid contact with skin, eyes, or clothing. Wear safety glasses to shield your eyes and rubber gloves to protect your hands.**
- **Fill the battery where clean water is available for flushing the skin.**

Maintain the cell level with distilled or demineralized water. Do not fill the cells above the bottom of the split ring inside each cell.

Keep the top of the battery clean by washing it periodically with a brush dipped in ammonia or bicarbonate of soda solution. Flush the top surface with water after cleaning it. Do not remove the fill caps while cleaning the battery.

Ensure that the battery cables are tight on the terminals to provide good electrical contact.

⚠ WARNING

Incorrect battery cable routing could damage the machine and cables causing sparks. Sparks can cause the battery gasses to explode, resulting in personal injury.

- **Always disconnect the negative (black) battery cable before disconnecting the positive (red) cable.**
- **Always connect the positive (red) battery cable before connecting the negative (black) cable.**

If corrosion occurs at the terminals, disconnect the cables, negative (-) cable first, and scrape the clamps and terminals separately. Connect the cables, positive (+) cable first, and coat the terminals with petroleum jelly.

Locating the Fuses

The fuses in the electrical system of the machine are located under the seat (Figure 42).

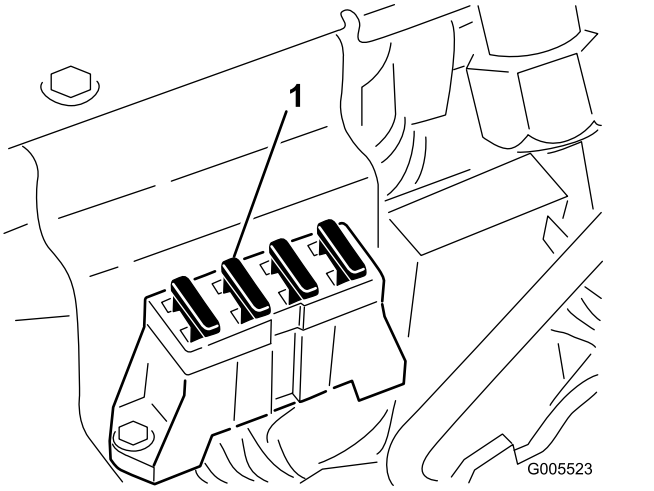

g005523

Figure 42

1. Fuses

Drive System Maintenance

Checking the Tire Pressure

Service Interval: Before each use or daily

Vary the tire pressure for the front wheels, depending upon your turf conditions, from a minimum of 55 kPa to a maximum of 83 kPa (8 to 12 psi).

Vary the tire pressure for the rear wheel from a minimum of 55 kPa to a maximum of 103 kPa (8 to 15 psi).

Checking the Torque of the Wheel Nuts

⚠ WARNING

Failure to maintain proper torque of the wheel nuts could result in personal injury.

Torque the wheel nuts to 95 to 122 N·m (70 to 90 ft-lb) after 1 to 4 hours of operation and again after 10 hours of operation. Torque every 200 hours thereafter.

To ensure even distribution, torque the wheel nuts in a star pattern.

Adjusting the Transmission for Neutral

If the machine creeps when the traction control pedal is in the NEUTRAL position, adjust the neutral-return mechanism.

1. Block up under the frame so that one of the front wheels is off of the floor.

   Note: If machine is equipped with a 3-Wheel Drive Kit, raise and block the rear wheel.

2. Start the engine, move the throttle to the SLOW position, and ensure that the front wheel that is off of the floor is not rotating.
3. If the wheel is rotating, shut off the engine and proceed as follows:

   A. Loosen both jam nuts securing the traction-control cable to the bulkhead on the hydrostat (Figure 43). Ensure that the jam nuts are loosened equally and sufficiently to allow adjustment.

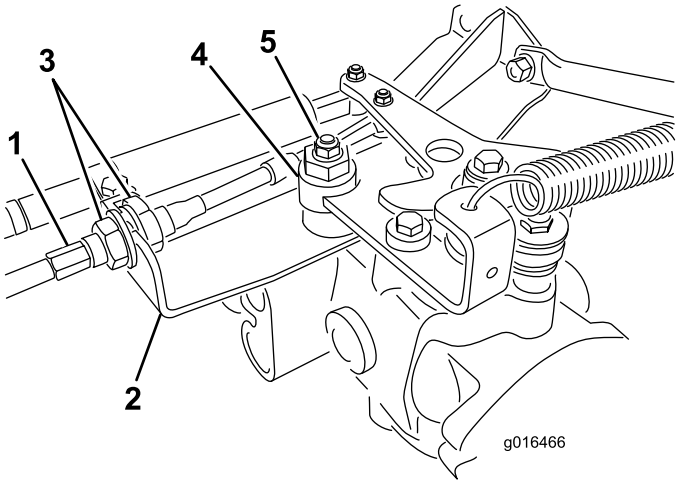

g016466

Figure 43

1. Traction cable
2. Bulkhead
3. Jam nuts
4. Eccentric
5. Locknut

Note: Loosen the nut securing the eccentric to the top of the hydrostat (Figure 43).

B. Move the functional-control lever to the NEUTRAL position and the throttle lever to the SLOW position.

C. Start the engine.

D. Rotate the eccentric until creep does not occur in either direction.

E. When the wheel stops rotating, tighten the nut locking the eccentric and the adjustment (Figure 43).

F. Verify the adjustment with the throttle lever in the SLOW and FAST position.

G. From each side of the bulkhead, tighten the locknuts evenly, securing the traction cable to the bulkhead (Figure 43). Do not twist the cable.

Note: If cable tension exists when the functional-control lever is in the NEUTRAL position, the machine may creep when you move the lever to the MOW or TRANSPORT position.

Adjusting the Transport Speed

Obtaining the Maximum Transport Speed

The traction pedal comes adjusted for maximum-transport speed, but you may need to adjust it if the pedal reaches full stroke before it contacts the pedal stop, or if you want to a decrease the transport speed.

To obtain the maximum-transport speed, put the functional control lever in the TRANSPORT position and press down on the traction pedal. If the pedal contacts the stop (Figure 44) before you feel tension on the cable, perform the following adjustment procedure:

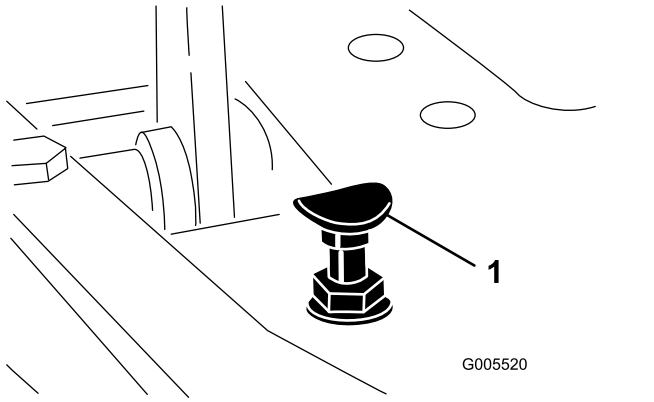

g005520

Figure 44

1. Pedal stop

1. Put the functional-control lever in the TRANSPORT position and loosen the locknut securing the pedal stop to the floor plate (Figure 44).
2. Tighten the pedal stop until it does not contact the traction pedal.
3. Continue applying a light load on the transport pedal and adjust the pedal stop so it contacts the pedal rod and tighten the nuts.

   Important: **Ensure that the tension on the cable is not excessive or you will reduce the cable life.**

Reducing the Transport Speed

1. Press down on the traction pedal and loosen the locknut securing the pedal stop to the floor plate.
2. Loosen the pedal stop until you obtain the desired transport speed.
3. Tighten the locknut securing the pedal stop.

Adjusting the Mowing Speed

Factory setting: 6.1 km/h (3.8 mph)

1. Loosen the jam nut on the trunnion bolt on the side of the traction pedal (Figure 45).

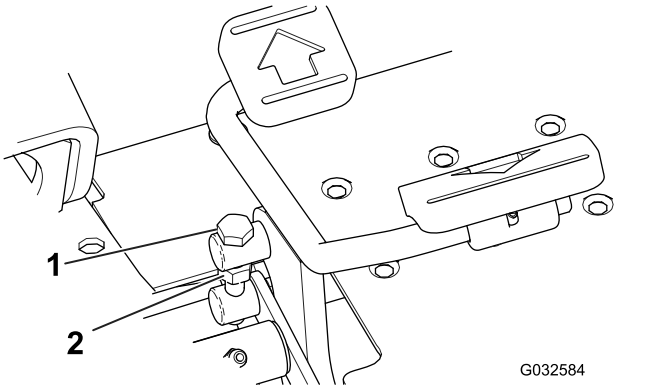

Figure 45

1. Trunnion bolt
2. Jam nut

2. Rotate the trunnion bolt counterclockwise to increase the mowing speed and clockwise to decrease it.
3. Tighten the jam nut without turning the trunnion bolt and check the ground speed. Repeat this procedure, if required.

Brake Maintenance

Adjusting the Brakes

A brake adjustment rod is located on each side of the machine so that you can adjust the brakes equally.

1. While moving forward in transport speed, press the brake pedal; both wheels should lock equally.

⚠ CAUTION

Testing the brakes in a confined area where others are present could cause injury.

Always check the brakes in a wide, open-spaced, flat area free from people and obstructions before and after the adjustment.

2. If the brakes do not lock equally, adjust the brakes as follows:
   A. Disconnect the brake rods by removing the cotter pin and clevis pin (Figure 46).

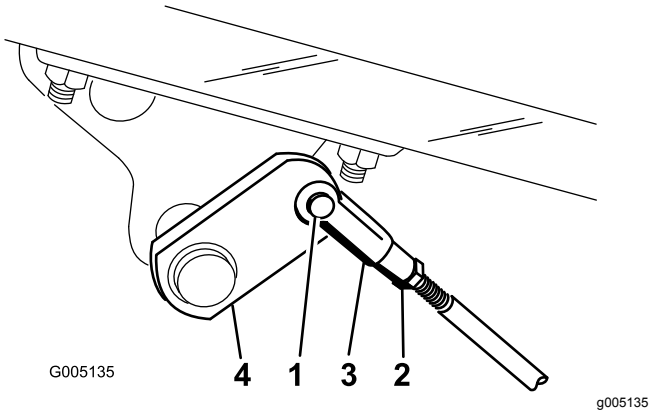

Figure 46

1. Clevis pin and cotter pin
2. Jam nut
3. Clevis
4. Brake shaft

   B. Loosen the jam nut and adjust the clevis accordingly (Figure 46).
   C. Assemble the clevis to the brake shaft (Figure 46).
   D. Check the amount of free travel of the brake pedal. There should be 13 to 26 mm (1/2 to 1 inch) travel before the brake shoes make contact with the brake drums. Adjust, if necessary, to achieve this setting.
   E. While moving forward in transport speed, press the brake pedal; both brakes should lock equally. Adjust them, if necessary.

Important: **Burnish the brakes annually; refer to the 10 Burnishing the Brakes (page 15) section.**

Controls System Maintenance

Adjusting the Cutting Unit Lift/Drop

The cutting unit lift/drop circuit comes with a flow-control valve (Figure 47). This valve is preset at the factory at approximately 3 turns open, but you may need to adjust it to compensate for differences in hydraulic fluid temperatures, mowing speeds, etc.

Note: Allow the hydraulic fluid to reach full operating temperature before adjusting the flow-control valve.

1. Raise the seat and locate the flow-control valve for the center-pull frame (Figure 47) which is located on the side of the hydraulic manifold.

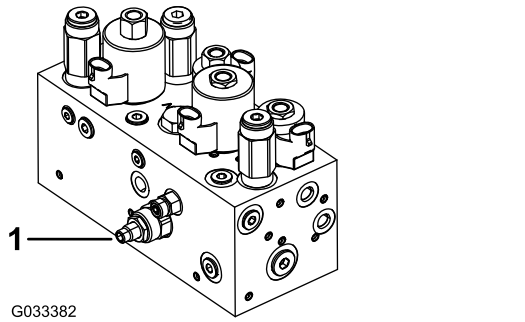

Figure 47

1. Flow-control valve

2. Loosen the jam nut on the adjusting knob on the flow control valve.
3. Rotate the knob counterclockwise if the center cutting unit is dropping too late or clockwise if the center cutting unit is dropping too early. You should not need to rotate it more than **1/32 to 1/16 of a turn.**
4. Test the adjustment and repeat step 3 as needed; when finished, tighten the jam nut.

Adjusting the Lift Cylinders

To regulate the height of the front-cutting units when in the raised (transport) position, you can adjust the front-lift cylinders.

1. Lower the cutting units to the ground.
2. Loosen the jam nut on the clevis of the cutting-unit-lift cylinder that needs to be adjusted.
3. Disconnect the cylinder clevis from the lift arm.
4. Rotate the clevis until you attain the desired height.
5. Connect the cylinder clevis to the lift arm and tighten the jam nut.

Hydraulic System Maintenance

Hydraulic System Safety

- **Ensure that all hydraulic-fluid hoses and lines are in good condition and all hydraulic connections and fittings are tight before applying pressure to the hydraulic system.**
- **Keep your body and hands away from pinhole leaks or nozzles that eject high-pressure hydraulic fluid.**
- **Use cardboard or paper to find hydraulic leaks.**
- **Safely relieve all pressure in the hydraulic system before performing any work on the hydraulic system.**
- **Seek immediate medical attention if fluid is injected into skin. Injected fluid must be surgically removed within a few hours by a doctor.**

Servicing the Hydraulic Fluid

Checking the Hydraulic-Fluid Level

The hydraulic-fluid reservoir is filled at the factory with approximately 32.2 L (8.5 US gallons) of high quality hydraulic fluid. Check the level of the hydraulic fluid before operating the machine each day. If the fluid is low, add an appropriate fluid as described in the following sections:

Toro Premium All Season Hydraulic Fluid (Available in 5 gallon pails or 55 gallon drums. See parts catalog or Toro distributor for part numbers.)

Alternate fluids: If the Toro fluid is not available, other fluids may be used provided they meet all the following material properties and industry specifications. We do not recommend the use of synthetic fluid. Consult with your lubricant distributor to identify a satisfactory product

Note: Toro will not assume responsibility for damage caused by improper substitutions, so use only products from reputable manufacturers who will stand behind their recommendation.

High Viscosity Index/Low Pour Point Anti-wear Hydraulic Fluid, ISO VG 46	
Material Properties:	
Viscosity, ASTM D445	cSt @ 40° C 44 to 50 cSt @ 100° C 7.9 to 8.5
Viscosity Index ASTM D2270	140 to 160
Pour Point, ASTM D97	-34° F to -49° F
Industry Specifications:	
Vickers I-286-S (Quality Level), Vickers M-2950-S (Quality Level), Denison HF-0	

Important: **The ISO VG 46 Multigrade fluid has been found to offer optimal performance in a wide range of temperature conditions. For operation in consistently high ambient temperatures, 18° C (65° F) to 49° C (120° F), ISO VG 68 hydraulic fluid may offer improved performance.**

Premium Biodegradable Hydraulic Fluid-Mobil EAL EnviroSyn 46H

Important: **Mobil EAL EnviroSyn 46H is the only synthetic biodegradable fluid approved by Toro. This fluid is compatible with the elastomers used in Toro hydraulic systems and is suitable for a wide-range of temperature conditions. This fluid is compatible with conventional mineral oils, but for maximum biodegradability and performance the hydraulic system should be thoroughly flushed of conventional fluid. The oil is available in 19 L (5 gallon) containers or 55 gallon drums from your Mobil Distributor.**

Note: Many hydraulic fluids are almost colorless, making it difficult to spot leaks. A red dye additive for the hydraulic system oil is available in 20 ml (2/3 oz) bottles. One bottle is sufficient for 15 to 22 L (4 to 6 gallons) of hydraulic fluid. Order Part No. 44-2500 from your authorized Toro distributor. **This red dye is not recommended for use with biodegradable fluids. Use food coloring.**

Important: **Regardless of the hydraulic fluid type used, any traction unit used for off-green applications, verticutting or used during ambient temperatures above 29° C (85° F) should have Oil Cooler Kit (Part No. 105-8339) installed.**

Checking the Hydraulic-Fluid Level

1. Position the machine on a level surface.

   Note: Make sure that the machine has cooled down so the oil is cold.

2. Check the oil level by viewing the sight window on the side of the auxiliary oil tank (Figure 48).

   Note: If the oil level is between the 2 marks on the sight window, the oil level is sufficient.

3. If the oil level is below the bottom mark in the sight window, remove the cap from the hydraulic fluid tank and slowly fill the tank with the appropriate high quality hydraulic fluid until the level is between the 2 marks on the sight window.

Important: **To prevent system contamination, clean the top of the hydraulic fluid containers before puncturing them. Ensure that the pour spout and funnel are clean.**

Note: Do not mix oils.

4. Install the cap.

Note: Make a close visual inspection of the hydraulic components. Inspect them for leaks, loose fasteners, missing parts, improperly routed lines, etc. Make any corrections necessary.

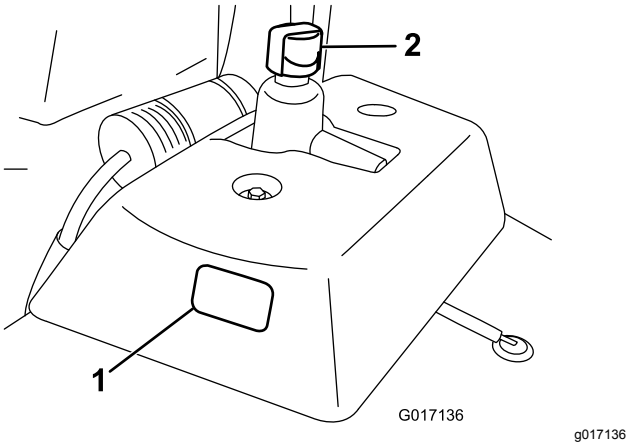

Figure 48

1. Sight window
2. Hydraulic tank cap

Changing the Hydraulic Fluid and Filter

Service Interval: After the first 50 hours

Every 800 hours

If the fluid becomes contaminated, have your Toro distributor flush the system. Contaminated fluid looks milky or black when compared to clean fluid.

1. Clean the area around the filter mounting area (Figure 49). Place a drain pan under the filter and remove the filter.

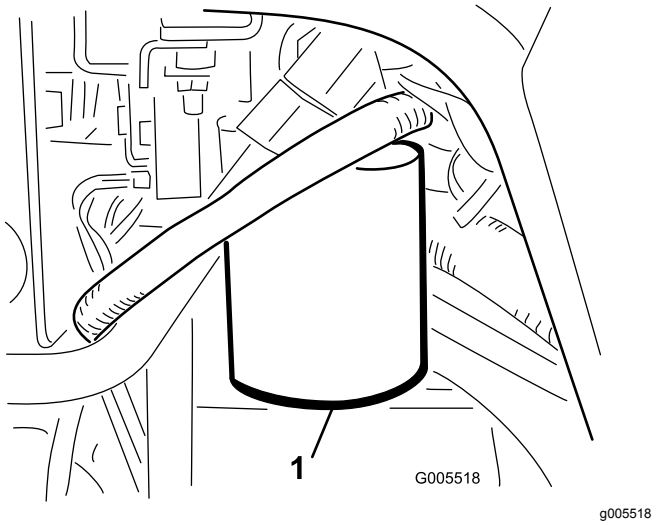

Figure 49

1. Hydraulic-fluid filter

Note: If you will not be draining the fluid, disconnect and plug the hydraulic line going to the filter.

2. Fill the replacement filter with the appropriate hydraulic fluid, lubricate the sealing gasket, and hand turn it until the gasket contacts the filter head. Then tighten it 3/4 turn further.
3. Fill the hydraulic reservoir with hydraulic fluid; refer to Checking the Hydraulic-Fluid Level (page 38).
4. Start the machine and run it at idle for 3 to 5 minutes to circulate the fluid and remove any air trapped in the system. Shut off the engine and check the fluid level.
5. Dispose of the fluid and filter properly.

Checking the Hydraulic Lines and Hoses

⚠ WARNING

Hydraulic fluid escaping under pressure can penetrate skin and cause injury.

- **Ensure that all hydraulic fluid hoses and lines are in good condition and all hydraulic connections and fittings are tight before applying pressure to the hydraulic system.**
- **Keep your body and hands away from pinhole leaks or nozzles that eject high-pressure hydraulic fluid.**
- **Use cardboard or paper to find hydraulic leaks.**
- **Safely relieve all pressure in the hydraulic system before performing any work on the hydraulic system.**
- **Get immediate medical help if fluid is injected into skin.**

Check the hydraulic lines and hoses daily for leaks, kinked lines, loose mounting supports, wear, loose fittings, weather deterioration, and chemical deterioration. Make all necessary repairs before operating.

Checking the Leak Detector

The leak detector system is designed to assist in early detection of hydraulic-fluid-system leaks. If the fluid level in the main hydraulic reservoir is lowered by 118 to 177 ml (4 to 6 oz), the float switch in the tank will close. After a 1 second delay, the alarm sounds, alerting the operator (Figure 52). Expansion of fluid, due to normal heating during machine operation, causes the fluid to transfer into the auxiliary fluid reservoir. The fluid returns to the main tank when you turn off the ignition switch.

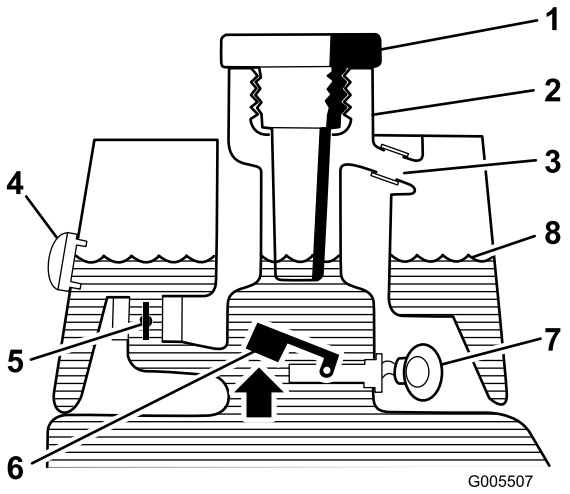

Figure 50

Before Starting (fluid cold)

1. Filler cap
2. Filler neck
3. Overflow tube
4. Sight window
5. Solenoid-return valve open
6. Float-raised switch open
7. No sound
8. Fluid level (cold)

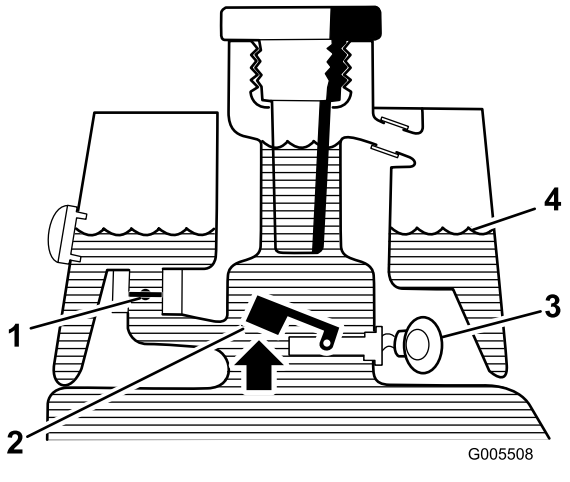

Figure 51

Normal Operation (fluid warm)

1. Solenoid-return valve closed
2. Float-raised switch open
3. Warning buzzer
4. Fluid level (warm)

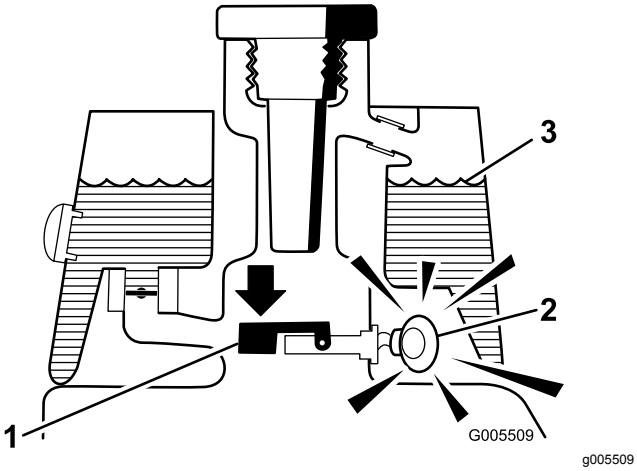

Figure 52
Leak Alert!

1. Float-down switch closed Fluid level down 118 to 177 ml (4 to 6 oz)
2. Warning buzzer
3. Fluid level (warm)

Checking the System Operation

1. With ignition switch in the ON position, move the leak detector switch rearward and hold. After the 1-second delay elapses, the alarm should sound.
2. Release the leak-detector switch.

Checking the Leak-Detector-System Operation

1. Move the ignition switch to the ON position. Do not start the engine.
2. Remove the hydraulic-tank cap from the neck of the tank.
3. Insert a clean rod or screwdriver into the tank neck and gently push down on the switch float (Figure 53); the alarm should sound after the 1-second delay.

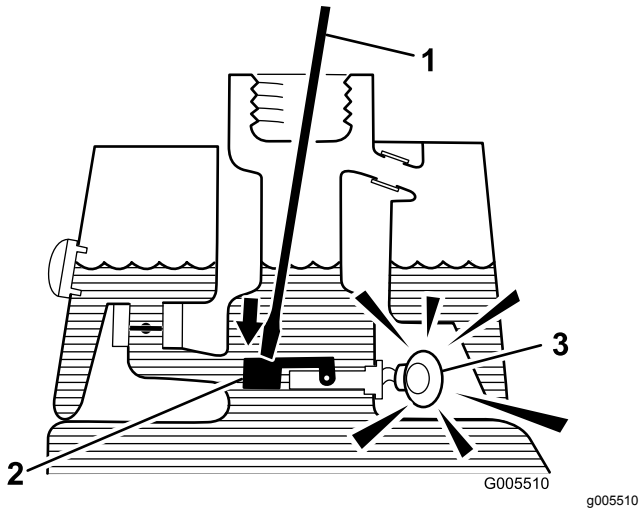

Figure 53

1. Clean rod or screwdriver
2. Press down on switch
3. Warning buzzer

4. Release the float; the alarm should stop sounding.
5. Install the hydraulic-tank cap.
6. Move the ignition switch to the OFF position.

Operating the Leak Detector

The leak detector alarm may sound for 1 of the following reasons:

- A leak of 118 to 177 ml (4 to 6 oz) has occurred.
- The fluid level in the main reservoir is reduced by 118 to 177 ml (4 to 6 oz) due to contraction of the fluid by cooling.

If the alarm sounds, turn off the machine as quickly as possible and inspect it for leaks. If the alarm sounds while operating on a green, drive off the green first. Determine the source of the leak and repair it before continuing operation.

If you do not find a leak and suspect a false alarm, move the ignition switch to the OFF position and allow the machine to stand for 1 to 2 minutes to allow the fluid levels to stabilize. Then start the machine and operate it in a non-sensitive area to confirm that no leak exists.

False alarms, due to dluid contraction, may be caused by extended idling of the machine after normal operation. A false alarm may also occur if you work the machine at a reduced workload after an extended period of a heavier workload. To avoid false alarms, turn the machine off rather than idling for extended periods.

Cutting Unit Maintenance

Cutting Unit Safety

A worn or damaged blade or bed-knife can break, and a piece could be thrown at you or bystanders, resulting in serious personal injury or death.

- Inspect the blades and bed-knives periodically for excessive wear or damage.
- Use care when checking the blades. Wear gloves and use caution when servicing them. Only replace or backlap the blades and bed-knives; never straighten or weld them.
- On machines with multiple cutting units, take care when rotating a reel; it can cause the reels in the other cutting units to rotate.

Checking the Reel-to-Bedknife Contact

Each day before operating the machine, check the reel-to-bedknife contact, regardless if the quality of cut had previously been acceptable. There must be light contact across the full length of the reel and bedknife; refer to the Cutting Unit *Operator's Manual*.

Setting the Reel Speed

To achieve a consistent, high-quality cut and a uniform, after-cut appearance, you must correctly set the reel speed control (located on the manifold block under the cover to the left of the seat). Adjust the reel speed control as follows:

1. Select the height-of-cut at which the cutting units are set.
2. Choose the desired ground speed best suited for conditions.
3. Using the appropriate graph (See Figure 54) for your 5-, 8-, 11-, or 14-blade cutting units, determine the proper reel speed setting.

	5		8		11		14
	3.8 MPH 6.1 Km/h	5.0 MPH 8.0 Km/h	3.8 MPH 6.1 Km/h	5.0 MPH 8.0 Km/h	3.8 MPH 6.1 Km/h	5.0 MPH 8.0 Km/h	3.8 MPH 6.1 Km/h
0.062"/ 1.6mm	N/R	N/R	9	N/R	9	N/R	9
0.094"/ 2.4mm	N/R	N/R	9	N/R	9	N/R	9
0.125"/ 3.2mm	N/R	N/R	9	N/R	9	N/R	9
0.156"/ 4.0mm	N/R	N/R	9	N/R	9	N/R	N/R
0.188"/ 4.8mm	N/R	N/R	9	N/R	7	N/R	N/R
0.218"/ 5.5mm	N/R	N/R	9	N/R	6	N/R	N/R
0.250"/ 6.4mm	7	N/R	6	7	5	7	N/R
0.312"/ 7.9mm	6	N/R	5	6	4	6	N/R
0.375"/ 9.5mm	6	7	4	5	4	5	N/R
0.438"/ 11.1mm	6	6	4	5	3	4	N/R
0.500"/ 12.7mm	5	6	3	4	N/R	N/R	N/R
0.625"/ 15.9mm	4	5	3	3	N/R	N/R	N/R
0.750"/ 19.0mm	3	4	3	3	N/R	N/R	N/R
0.875"/ 22.2mm	3	4	N/R	3	N/R	N/R	N/R
1.000"/ 25.4mm	3	3	N/R	N/R	N/R	N/R	N/R

g014736

g014736

Figure 54

4. To set the reel speed, rotate the knob (Figure 55) until the indicator arrows are in line with the number designating desired setting.

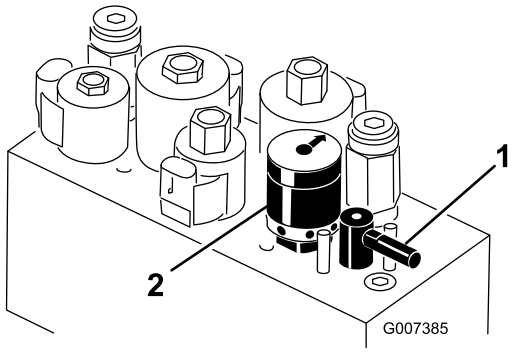

g007385

Figure 55

1. Backlap lever
2. Reel-speed control

Note: You can increase or decrease the reel speed to compensate for turf conditions.

Backlapping the Reels

⚠ WARNING

Contact with the reels or other moving parts can result in personal injury.

- **Keep fingers, hands, and clothing away from the reels or other moving parts.**
- **Never attempt to turn the reels by hand or foot while the engine is running.**

1. Position the machine on a level surface, lower the cutting units, shut off the engine, and set the parking brake.
2. Unlock and raise the seat to expose the controls.

3. Make initial reel to bedknife adjustments appropriate for backlapping on all cutting units which are to be backlapped; refer to the *Cutting Unit Operator's Manual*.
4. Rotate the backlap lever to the R position (Figure 56).

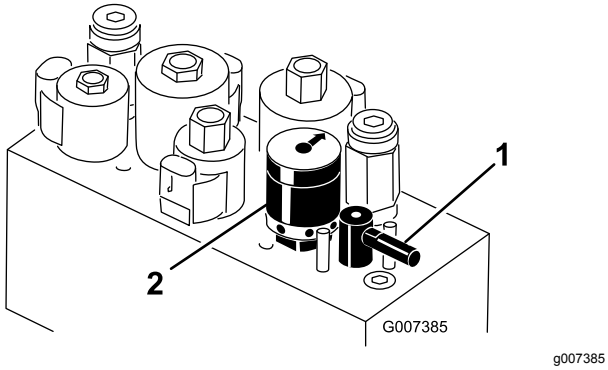

g007385

Figure 56

1. Backlap lever
2. Reel speed control

5. Rotate the reel-speed control to setting 1 (Figure 56).
6. Start the engine and run at low idle speed.

   Important: **Do not change the engine speed while backlapping or the reels may stall. Only backlap at idle engine speed.**
7. With the mow/transport lever in the NEUTRAL position, move the raise/lower mow control forward to start the backlapping operation on the designated reels.
8. Apply lapping compound with a long handle brush. Never use a short handled brush.
   - If the reels stall or become erratic while backlapping, select a higher reel speed setting until the speed stabilizes, then return the reel speed to setting 1 or to your desired speed.
   - To make an adjustment to the cutting units while backlapping, turn the reels off by moving the raise/lower mow control rearward and stop the engine. After completing adjustments, repeat steps 4 through 8.
9. Repeat the procedure for all cutting units you want to backlap.
10. When finished, return the backlap lever to the F position, move the cutting unit reel speed control to the desired mowing position, lower the seat, and wash all lapping compound off of the cutting units. Adjust cutting unit reel to bedknife as needed.

    Important: **If you do not return the backlap lever to the F position after backlapping, the cutting units will not raise or function properly.**

Storage

If you wish to store the machine for a long period of time, the following steps should be performed prior to storage:

1. Remove accumulations of dirt and old grass clippings. Sharpen the reels and bedknives, if necessary; refer to the *Cutting Unit Operator's Manual*. Use a rust preventive on bedknives and reel blades. Grease and oil all lubrication points; refer to Greasing the Machine (page 29).
2. Block up the wheels to remove any weight on the tires.
3. Drain and replace the hydraulic fluid and filter and inspect the hydraulic lines and fittings. Replace, if necessary; refer to Changing the Hydraulic Fluid and Filter (page 39) and Checking the Hydraulic Lines and Hoses (page 40).
4. Drain the fuel tank. Run the engine until it stops from lack of fuel. Replace the fuel filter; refer to Replacing the Fuel Filter (page 33).
5. While the engine is still warm, drain the oil from the crankcase. Refill it with fresh oil; refer to Checking the Engine Oil (page 31).
6. Remove the spark plugs, pour one ounce of SAE 30 oil into the cylinders, and crank slowly to distribute the oil. Replace the spark plugs; refer to Replacing the Spark Plugs (page 32).
7. Clean dirt and chaff from the cylinder, cylinder head fins, and blower housing.
8. Remove the battery and charge it fully. Either store it on the shelf or on the machine. Leave the cables disconnected if it is stored on the machine. Store the battery in a cool atmosphere to avoid quick deterioration of the charge in the battery.
9. If possible, store the machine in a warm, dry location.

Notes:

Notes:

European Privacy Notice

The Information Toro Collects
Toro Warranty Company (Toro) respects your privacy. In order to process your warranty claim and contact you in the event of a product recall, we ask you to share certain personal information with us, either directly or through your local Toro company or dealer.

The Toro warranty system is hosted on servers located within the United States where privacy law may not provide the same protection as applies in your country.

BY SHARING YOUR PERSONAL INFORMATION WITH US, YOU ARE CONSENTING TO THE PROCESSING OF YOUR PERSONAL INFORMATION AS DESCRIBED IN THIS PRIVACY NOTICE.

The Way Toro Uses Information
Toro may use your personal information to process warranty claims, to contact you in the event of a product recall and for any other purpose which we tell you about. Toro may share your information with Toro's affiliates, dealers or other business partners in connection with any of these activities. We will not sell your personal information to any other company. We reserve the right to disclose personal information in order to comply with applicable laws and with requests by the appropriate authorities, to operate our systems properly or for our own protection or that of other users.

Retention of your Personal Information
We will keep your personal information as long as we need it for the purposes for which it was originally collected or for other legitimate purposes (such as regulatory compliance), or as required by applicable law.

Toro's Commitment to Security of Your Personal Information
We take reasonable precautions in order to protect the security of your personal information. We also take steps to maintain the accuracy and current status of personal information.

Access and Correction of your Personal Information
If you would like to review or correct your personal information, please contact us by email at legal@toro.com.

Australian Consumer Law

Australian customers will find details relating to the Australian Consumer Law either inside the box or at your local Toro Dealer.

The Toro Warranty

A Two-Year Limited Warranty

Conditions and Products Covered

The Toro Company and its affiliate, Toro Warranty Company, pursuant to an agreement between them, jointly warrant your Toro Commercial product ("Product") to be free from defects in materials or workmanship for two years or 1500 operational hours*, whichever occurs first. This warranty is applicable to all products with the exception of Aerators (refer to separate warranty statements for these products). Where a warrantable condition exists, we will repair the Product at no cost to you including diagnostics, labor, parts, and transportation. This warranty begins on the date the Product is delivered to the original retail purchaser.
* Product equipped with an hour meter.

Instructions for Obtaining Warranty Service

You are responsible for notifying the Commercial Products Distributor or Authorized Commercial Products Dealer from whom you purchased the Product as soon as you believe a warrantable condition exists. If you need help locating a Commercial Products Distributor or Authorized Dealer, or if you have questions regarding your warranty rights or responsibilities, you may contact us at:

Toro Commercial Products Service Department
Toro Warranty Company
8111 Lyndale Avenue South
Bloomington, MN 55420-1196

952–888–8801 or 800–952–2740
E-mail: commercial.warranty@toro.com

Owner Responsibilities

As the Product owner, you are responsible for required maintenance and adjustments stated in your *Operator's Manual*. Failure to perform required maintenance and adjustments can be grounds for disallowing a warranty claim.

Items and Conditions Not Covered

Not all product failures or malfunctions that occur during the warranty period are defects in materials or workmanship. This warranty does not cover the following:

- Product failures which result from the use of non-Toro replacement parts, or from installation and use of add-on, or modified non-Toro branded accessories and products. A separate warranty may be provided by the manufacturer of these items.
- Product failures which result from failure to perform recommended maintenance and/or adjustments. Failure to properly maintain your Toro product per the Recommended Maintenance listed in the *Operator's Manual* can result in claims for warranty being denied.
- Product failures which result from operating the Product in an abusive, negligent, or reckless manner.
- Parts subject to consumption through use unless found to be defective. Examples of parts which are consumed, or used up, during normal Product operation include, but are not limited to, brake pads and linings, clutch linings, blades, reels, rollers and bearings (sealed or greasable), bed knives, spark plugs, castor wheels and bearings, tires, filters, belts, and certain sprayer components such as diaphragms, nozzles, and check valves, etc.
- Failures caused by outside influence. Conditions considered to be outside influence include, but are not limited to, weather, storage practices, contamination, use of unapproved fuels, coolants, lubricants, additives, fertilizers, water, or chemicals, etc.
- Failure or performance issues due to the use of fuels (e.g. gasoline, diesel, or biodiesel) that do not conform to their respective industry standards.
- Normal noise, vibration, wear and tear, and deterioration.
- Normal "wear and tear" includes, but is not limited to, damage to seats due to wear or abrasion, worn painted surfaces, scratched decals or windows, etc.

Parts

Parts scheduled for replacement as required maintenance are warranted for the period of time up to the scheduled replacement time for that part. Parts replaced under this warranty are covered for the duration of the original product warranty and become the property of Toro. Toro will make the final decision whether to repair any existing part or assembly or replace it. Toro may use remanufactured parts for warranty repairs.

Deep Cycle and Lithium-Ion Battery Warranty:

Deep cycle and Lithium-Ion batteries have a specified total number of kilowatt-hours they can deliver during their lifetime. Operating, recharging, and maintenance techniques can extend or reduce total battery life. As the batteries in this product are consumed, the amount of useful work between charging intervals will slowly decrease until the battery is completely worn out. Replacement of worn out batteries, due to normal consumption, is the responsibility of the product owner. Battery replacement may be required during the normal product warranty period at owner's expense. Note: (Lithium-Ion battery only): A Lithium-Ion battery has a part only prorated warranty beginning year 3 through year 5 based on the time in service and kilowatt hours used. Refer to the *Operator's Manual* for additional information.

Maintenance is at Owner's Expense

Engine tune-up, lubrication, cleaning and polishing, replacement of filters, coolant, and completing recommended maintenance are some of the normal services Toro products require that are at the owner's expense.

General Conditions

Repair by an Authorized Toro Distributor or Dealer is your sole remedy under this warranty.

Neither The Toro Company nor Toro Warranty Company is liable for indirect, incidental or consequential damages in connection with the use of the Toro Products covered by this warranty, including any cost or expense of providing substitute equipment or service during reasonable periods of malfunction or non-use pending completion of repairs under this warranty. Except for the Emissions warranty referenced below, if applicable, there is no other express warranty. All implied warranties of merchantability and fitness for use are limited to the duration of this express warranty.

Some states do not allow exclusions of incidental or consequential damages, or limitations on how long an implied warranty lasts, so the above exclusions and limitations may not apply to you. This warranty gives you specific legal rights, and you may also have other rights which vary from state to state.

Note regarding engine warranty:

The Emissions Control System on your Product may be covered by a separate warranty meeting requirements established by the U.S. Environmental Protection Agency (EPA) and/or the California Air Resources Board (CARB). The hour limitations set forth above do not apply to the Emissions Control System Warranty. Refer to the Engine Emission Control Warranty Statement supplied with your product or contained in the engine manufacturer's documentation for details

Countries Other than the United States or Canada

Customers who have purchased Toro products exported from the United States or Canada should contact their Toro Distributor (Dealer) to obtain guarantee policies for your country, province, or state. If for any reason you are dissatisfied with your Distributor's service or have difficulty obtaining guarantee information, contact the Toro importer.

374-0253 Rev D