Form No. 3385-938 Rev B

TORO®

Count on it.

Operator's Manual

Greensmaster® 3400 TriFlex™ Traction Unit

Model No. 04520—Serial No. 314004001 and Up

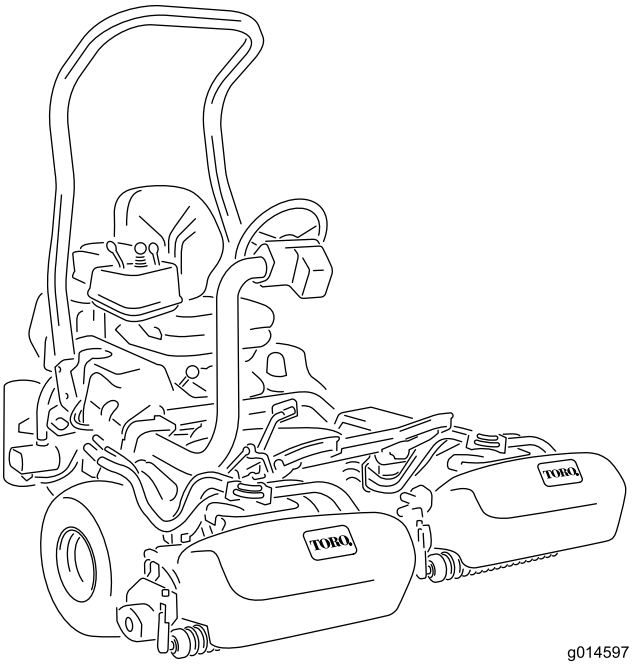

g014597

Register at www.Toro.com.
Original Instructions (EN)

CE

3385-938 B

This product complies with all relevant European directives; for details, please see the separate product specific Declaration of Conformity (DOC) sheet.

⚠ WARNING

CALIFORNIA
Proposition 65 Warning

This product contains a chemical or chemicals known to the State of California to cause cancer, birth defects, or reproductive harm.

Diesel engine exhaust and some of its constituents are known to the State of California to cause cancer, birth defects, and other reproductive harm.

Important: **This engine is not equipped with a spark arrester muffler. It is a violation of California Public Resource Code Section 4442 to use or operate the engine on any forest-covered, brush-covered, or grass-covered land. Other states or federal areas may have similar laws.**

Introduction

This machine is a ride-on, reel-blade lawn mower intended to be used by professional, hired operators in commercial applications. It is primarily designed for cutting grass on well-maintained lawns in parks, golf courses, sports fields, and on commercial grounds. It is not designed for cutting brush, mowing grass and other growth alongside highways, or for agricultural uses.

Read this information carefully to learn how to operate and maintain your product properly and to avoid injury and product damage. You are responsible for operating the product properly and safely.

You may contact Toro directly at www.Toro.com for product and accessory information, help finding a dealer, or to register your product.

Whenever you need service, genuine Toro parts, or additional information, contact an Authorized Service Dealer or Toro Customer Service and have the model and serial numbers of your product ready. Figure 1 identifies the location of the model and serial numbers on the product. Write the numbers in the space provided.

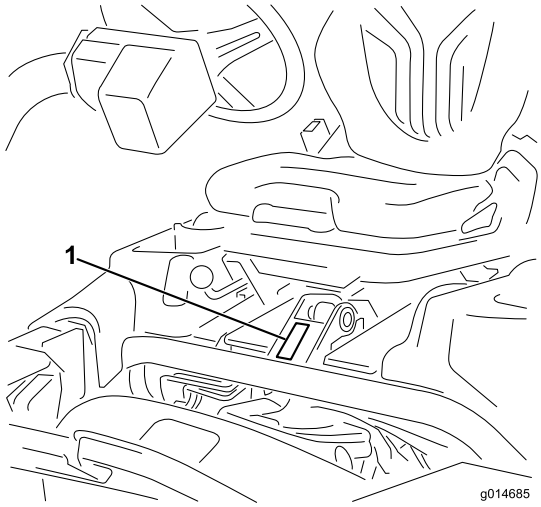

g014685

Figure 1

1. Model and serial number location

Model No. _____

Serial No. _____

This manual identifies potential hazards and has safety messages identified by the safety alert symbol (Figure 2), which signals a hazard that may cause serious injury or death if you do not follow the recommended precautions.



g000502

Figure 2

1. Safety alert symbol

This manual uses 2 words to highlight information. **Important** calls attention to special mechanical information and **Note** emphasizes general information worthy of special attention.

© 2017—The Toro® Company
8111 Lyndale Avenue South
Bloomington, MN 55420

Contact us at www.Toro.com.
Printed in the USA
All Rights Reserved

Contents

Safety 4
Safe Operating Practices 4
Toro Mower Safety 6
Sound Power Level 8
Sound Pressure Level 8
Hand-Arm Vibration Level 8
Whole Body Vibration Level 8
Safety and Instructional Decals 8
Setup 12
1 Installing the Roll Bar 13
2 Installing the Seat 13
3 Installing the Steering Wheel 13
4 Activating and Charging the Battery 14
5 Installing the Oil Cooler (optional) 15
6 Installing the Grass Basket Hooks 16
7 Installing the Cutting Units 16
8 Adding Rear Weight 18
9 Installing the CE Guard Kit 18
10 Installing EU Decals 18
Product Overview 18
Controls 18
Specifications 22
Attachments/Accessories 22
Operation 22
Think Safety First 22
Checking the Engine Oil 22
Filling the Fuel Tank 23
Using Biodiesel Fuel 24
Checking the Cooling System 25
Checking the Hydraulic Fluid Level 25
Draining Water from the Fuel Filter 26
Checking the Tire Pressure 27
Checking the Torque of the Wheel Nuts 27
Checking the Reel-to-Bedknife Contact 27
Breaking-in the Machine 27
Starting and Stopping the Machine 27
Checking the Safety Interlock System 28
Installing and Removing the Cutting Units 29
Setting the Reel Speed 31
Mowing with the Machine 31
Transporting the Machine 32
Cleaning and Inspecting the Machine 32
Towing the Machine 33
Maintenance 34
Recommended Maintenance Schedule(s) 34
Daily Maintenance Checklist 35
Engine Maintenance 36
Servicing the Air Cleaner 36
Changing the Engine Oil and Filter 36
Fuel System Maintenance 37
Servicing the Fuel Filter/Water Separator 37
Inspecting the Fuel Lines and Connections 38
Electrical System Maintenance 38
Servicing the Battery 38
Storing the Battery 39
Locating the Fuses 39
Drive System Maintenance 40
Adjusting the Transmission for Neutral 40
Adjusting the Transport Speed 40
Adjusting the Mowing Speed 40
Cooling System Maintenance 41
Cleaning the Radiator Screen 41
Brake Maintenance 42
Adjusting the Brakes 42
Belt Maintenance 42
Adjusting the Alternator Belt 42
Hydraulic System Maintenance 43
Changing the Hydraulic Oil and Filter 43
Checking the Hydraulic Lines and Hoses 43
Cutting Unit Maintenance 44
Backlapping the Reels 44
Diagnostics System 45
Diagnosing the Service Indicator Light 45
Storage 46

Safety

This machine meets or exceeds CEN standard EN 836:1997, ISO standard 5395:1990, and ANSI B71.4-2012 specifications in effect at the time of production when 16.8 kg (37 lb) of weight is added to the rear wheel.

Improper use or maintenance by the operator or owner can result in injury. To reduce the potential for injury, comply with these safety instructions and always pay attention to the safety alert symbol (Figure 2), which means Caution, Warning, or Danger—personal safety instruction. Failure to comply with the instruction may result in personal injury or death.

Safe Operating Practices

The following instructions are adapted from CEN standard EN 836:1997, ISO standard 5395:1990, and ANSI B71.4-2012.

Training

- Read the *Operator's Manual* and other training material carefully. Be familiar with the controls, safety signs, and the proper use of the equipment.
- If the operator or mechanic can not read the language of this manual, it is the owner's responsibility to explain this material to them.
- Never allow children or people unfamiliar with these instructions to use or service the mower. Local regulations may restrict the age of the operator.
- Never mow while people, especially children, or pets are nearby.
- Keep in mind that the operator or user is responsible for accidents or hazards occurring to other people or their property.
- Do not carry passengers.
- All drivers and mechanics should seek and obtain professional and practical instruction. The owner is responsible for training the users. Such instruction should emphasize:
  - the need for care and concentration when working with ride-on machines;
  - control of a ride-on machine sliding on a slope will not be regained by the application of the brake. The main reasons for loss of control are:
    - ◊ insufficient wheel grip;
    - ◊ being driven too fast;
    - ◊ inadequate braking;
    - ◊ the type of machine is unsuitable for the task;
    - ◊ lack of awareness of the effect of ground conditions, especially slopes.
    - ◊ The owner/user can prevent and is responsible for accidents or injuries occurring to people, or damage to property.

Preparation

- While mowing, always wear substantial footwear, long trousers, hard hat, safety glasses, and hearing protection. Long hair, loose clothing, or jewelry may get tangled in moving parts. Do not operate the equipment when barefoot or wearing open sandals.
- Thoroughly inspect the area where the equipment is to be used and remove all objects which may be thrown by the machine.
- Replace faulty silencers/mufflers.
- Evaluate the terrain to determine what accessories and attachments are needed to properly and safely perform the job. Only use accessories and attachments approved by the manufacturer.
- Check that operator's presence controls, safety switches and shields are attached and functioning properly. Do not operate unless they are functioning properly.

Operation

- Do not operate the engine in a confined space where dangerous carbon monoxide fumes can collect.
- Mow only in daylight or in good artificial light.
- Before attempting to start the engine, disengage all blade attachment clutches, shift into neutral, and engage the parking brake.
- Remember there is no such thing as a safe slope. Travel on grass slopes requires particular care. To guard against overturning:
  - do not stop or start suddenly when going up or downhill;
  - machine speeds should be kept low on slopes and during tight turns;
  - stay alert for humps and hollows and other hidden hazards;
  - never mow across the face of the slope, unless the mower is designed for this purpose.
- Stay alert for holes in the terrain and other hidden hazards.
- Watch out for traffic when crossing or near roadways.
- Stop the blades from rotating before crossing surfaces other than grass.

- When using any attachments, never direct discharge of material toward bystanders nor allow anyone near the machine while in operation.
- Never operate the machine with damaged guards, shields, or without safety protective devices in place. Be sure all interlocks are attached, adjusted properly, and functioning properly.
- Do not change the engine governor settings or overspeed the engine. Operating the engine at excessive speed may increase the hazard of personal injury.
- Before leaving the operator's position:
  - stop on level ground;
  - disengage the power take-off and lower the attachments;
  - change into neutral and set the parking brake;
  - stop the engine and remove the key.
- Disengage drive to attachments when transporting or not in use.
- Stop the engine and disengage drive to attachment:
  - before refuelling;
  - before removing the grass catcher/catchers;
  - before making height adjustment unless adjustment can be made from the operator's position.
  - before clearing blockages;
  - before checking, cleaning or working on the mower;
  - after striking a foreign object or if an abnormal vibration occurs. Inspect the mower for damage and make repairs before restarting and operating the equipment.
- Reduce the throttle setting before stopping the engine and, if the engine is provided with a fuel shut-off valve, turn the fuel off at the conclusion of mowing.
- Keep hands and feet away from the cutting units.
- Look behind and down before backing up to be sure of a clear path.
- Slow down and use caution when making turns and crossing roads and sidewalks. Stop the reels when not mowing.
- Do not operate the mower under the influence of alcohol or drugs.
- Lightning can cause severe injury or death. If lightning is seen or thunder is heard in the area, do not operate the machine; seek shelter.
- Use care when loading or unloading the machine into a trailer or truck.
- Use care when approaching blind corners, shrubs, trees, or other objects that may obscure vision.

Rollover Protection System (ROPS) - Use and Maintenance

- The ROPS is an integral and effective safety device. Keep a folding ROPS in the raised and locked position and use the seat belt when operating the machine.
- Lower a folding ROPS temporarily only when absolutely necessary. Do not wear the seat belt when folded down.
- Be aware there is no rollover protection when a folded ROPS is in the down position.
- Be certain that the seat belt can be released quickly in the event of an emergency.
- Check the area to be mowed and never fold down a folding ROPS in areas where there are slopes, drop offs or water.
- Check carefully for overhead clearances (i.e. branches, doorways, electrical wires) before driving under any objects and do not contact them.
- Keep the ROPS in safe operating condition by periodically thoroughly inspecting for damage and keeping all mounting fasteners tight.
- Replace a damaged ROPS. Do not repair or revise.
- Do not remove the ROPS.
- Any alterations to a ROPS must be approved by the manufacturer.

Safe Handling of Fuels

- To avoid personal injury or property damage, use extreme care in handling gasoline. Gasoline is extremely flammable and the vapors are explosive.
- Extinguish all cigarettes, cigars, pipes, and other sources of ignition.
- Use only an approved fuel container.
- Never remove fuel cap or add fuel with the engine running.
- Allow engine to cool before refueling.
- Never refuel the machine indoors.
- Never store the machine or fuel container where there is an open flame, spark, or pilot light such as on a water heater or on other appliances.
- Never fill containers inside a vehicle or on a truck or trailer bed with a plastic liner. Always place containers on the ground away from your vehicle before filling.
- Remove equipment from the truck or trailer and refuel it on the ground. If this is not possible, then refuel such equipment with a portable container, rather than from a fuel dispenser nozzle.

- Keep the nozzle in contact with the rim of the fuel tank or container opening at all times until fueling is complete.
- Do not use a nozzle lock open device.
- If fuel is spilled on clothing, change clothing immediately.
- Never overfill fuel tank. Replace fuel cap and tighten securely.

Maintenance and Storage

- Keep all nuts, bolts and screws tight to be sure the equipment is in safe working condition.
- Never store the equipment with fuel in the tank inside a building where fumes may reach an open flame or spark.
- Allow the engine to cool before storing in any enclosure.
- To reduce the risk of fire hazard, keep the engine, silencer/muffler, battery compartment, and fuel storage area free of grass, leaves, or excessive grease.
- Replace worn or damaged parts for safety.
- Check the grass catcher frequently for wear or deterioration.
- Keep all parts in good working condition and all hardware and hydraulic fittings tightened. Replace all worn or damaged parts and decals.
- If the fuel tank has to be drained, do this outdoors.
- Be careful during adjustment of the machine to prevent entrapment of the fingers between moving blades and fixed parts of the machine.
- On multi-reel machines, take care as rotating one reel can cause other reels to rotate.
- Disengage drives, lower the cutting units, set parking brake, stop engine and remove key. Wait for all movement to stop before adjusting, cleaning or repairing.
- Clean grass and debris from cutting units, drives, mufflers, and engine to help prevent fires. Clean up oil or fuel spillage.
- Use jack stands to support components when required.
- Carefully release pressure from components with stored energy.
- Disconnect battery before making any repairs. Disconnect the negative terminal first and the positive last. Reconnect positive first and negative last.
- Use care when checking the reels. Wrap the reels or wear gloves, and use caution when servicing them.
- Keep hands and feet away from moving parts. If possible, do not make adjustments with the engine running.
- Charge batteries in an open well ventilated area, away from spark and flames. Unplug charger before connecting or disconnecting from battery. Wear protective clothing and use insulated tools.

Hauling

- Use care when loading or unloading the machine into a trailer or truck.
- Use full width ramps for loading machine into trailer or truck.
- Tie the machine down securely using straps, chains, cable, or ropes. Both front and rear straps should be directed down and outward from the machine.

Toro Mower Safety

The following list contains safety information specific to Toro products or other safety information that you must know that is not included in the ANSI standards.

This product is capable of amputating hands and feet and throwing objects. Always follow all safety instructions to avoid serious injury or death.

Use of this product for purposes other than its intended use could prove dangerous to user and bystanders.

Operation

- Know how to stop the engine quickly.
- Always wear substantial shoes. Do not operate the machine while wearing sandals, tennis shoes, or sneakers. Wearing safety shoes and long pants is advisable and required by some local ordinances and insurance regulations.
- The operator must be skilled and trained in how to drive on hillsides. Failure to use caution on slopes or hills may cause loss of control and cause the vehicle to tip or roll, possibly resulting in personal injury or death.
- Handle fuel carefully. Wipe up any spills.
- Check the safety interlock switches daily for proper operation. If a switch should fail, replace the switch before operating the machine
- Before attempting to start the engine, sit on the seat, pull the lift lever back and release it to ensure the cutting units are disengaged. Verify that the traction system is in neutral and the parking brake is set.
- Using the machine demands attention. To prevent loss of control:

  - Do not drive close to sand traps, ditches, creeks, or other hazards.
  - Reduce speed when making sharp turns. Avoid sudden stops and starts.
  - Watch out for traffic when near or crossing roads. Always yield the right-of-way.
  - Apply the service brakes when going downhill to keep forward speed slow and to maintain control of the machine.
- The grass baskets must be in place during operation of the reels or thatchers for maximum safety. Shut the engine off before emptying the baskets.
- Raise the cutting units when driving from one work area to another.
- Do not touch the engine, muffler, or exhaust pipe while the engine is running or soon after it has stopped because these areas could be hot enough to cause burns.
- Before getting off of the seat, move the functional control lever to neutral (N), raise the cutting units and wait for the reels to stop spinning. Set the parking brake. Stop the engine and remove the key from the ignition switch.
- Traverse slopes carefully. Do not start or stop suddenly when traveling uphill or downhill.
- The operator must be skilled and trained in how to drive on hillsides. Failure to use caution on slopes or hills may cause loss of control and cause the machine to tip or roll, possibly resulting in personal injury or death.
- If the engine stalls or loses headway and cannot make it to the top of a slope, do not turn the machine around. Always back slowly, straight down the slope.
- When a person or pet appears unexpectedly in or near the mowing area, **stop mowing**. Careless operation, combined with terrain angles, ricochets, or improperly positioned guards can lead to thrown object injuries. Do not resume mowing until the area is cleared.
- Always use the seat belt with the ROPS when operating the machine.
- Before getting off of the seat, move the functional control lever to neutral (N), raise the cutting units and wait for the reels to stop spinning. Set the parking brake. Stop the engine and remove the key from the ignition switch.
- Whenever the machine is left unattended, make sure the cutting units are fully raised, the reels are not spinning, the key is removed from the ignition switch, and the parking brake is set.

Maintenance and Storage

- Make sure all hydraulic line connectors are tight and all hydraulic hoses and lines are in good condition before applying pressure to the system.
- Keep your body and hands away from pin hole leaks or nozzles that eject hydraulic fluid under high pressure. Use paper or cardboard, not your hands, to search for leaks. Hydraulic fluid escaping under pressure can have sufficient force to penetrate the skin and cause serious injury.
- Before disconnecting or performing any work on the hydraulic system, all pressure in the system must be relieved by stopping the engine and lowering the cutting units and attachments to the ground.
- Check all fuel lines for tightness and wear on a regular basis. Tighten or repair them as needed.
- If the engine must be running to perform a maintenance adjustment, keep hands, feet, clothing, and any parts of the body away from the cutting units, attachments, and any moving parts, especially the screen at the side of the engine. Keep everyone away.
- To ensure safety and accuracy, have an Authorized Toro Distributor check the maximum engine speed with a tachometer. Maximum governed engine speed should be 2900 rpm.
- The engine must be shut off before checking the oil or adding oil to the crankcase.
- If major repairs are ever needed or if assistance is desired, contact an Authorized Toro Distributor.
- To ensure optimum performance and continued safety certification of the machine, use only genuine Toro replacement parts and accessories. Replacement parts and accessories made by other manufacturers could be dangerous, and such use could void the product warranty.

Sound Power Level

This unit has a guaranteed sound power level of 98 dBA, which includes an Uncertainty Value (K) of 1 dBA.

Sound power level was determined according to the procedures outlined in ISO 11094.

Sound Pressure Level

This unit has a sound pressure level at the operator's ear of 84 dBA, which includes an Uncertainty Value (K) of 1 dBA.

Sound pressure level was determined according to the procedures outlined in EN 836.

Hand-Arm Vibration Level

Measured vibration level for right hand = 0.22 m/s^2

Measured vibration level for left hand = 0.24 m/s^2

Uncertainty Value (K) = 0.24 m/s^2

Measured values were determined according to the procedures outlined in EN 836.

Whole Body Vibration Level

Measured vibration level = 0.41 m/s^2

Uncertainty Value (K) = 0.21 m/s^2

Measured values were determined according to the procedures outlined in EN 836.

Safety and Instructional Decals

Safety decals and instructions are easily visible to the operator and are located near any area of potential danger. Replace any decal that is damaged or lost.

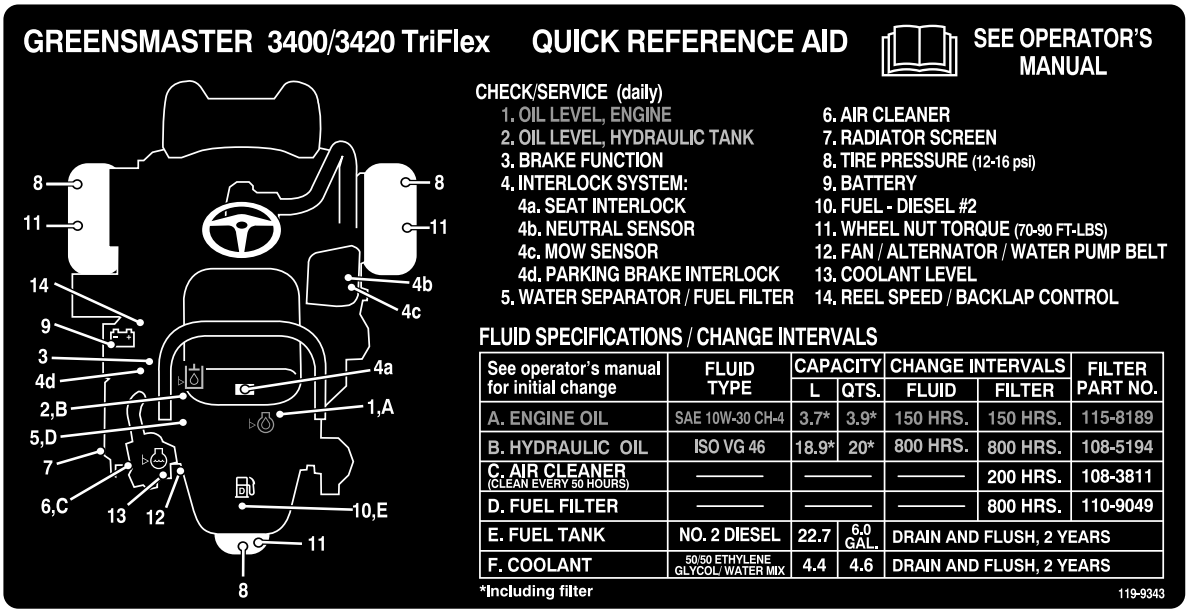

decal119-9343

119-9343

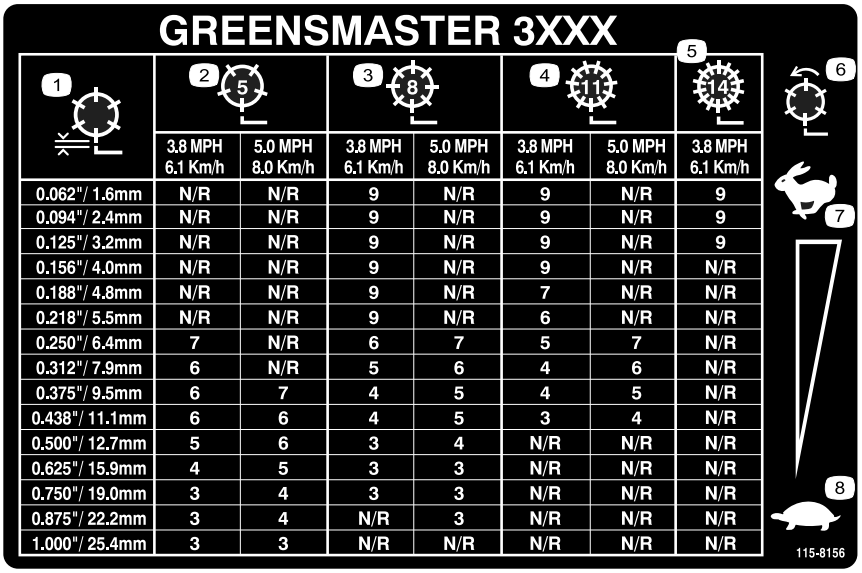

decal115-8156

115-8156

1. Reel height
2. 5 Blade cutting unit
3. 8 Blade cutting unit
4. 11 Blade cutting unit
5. 14 Blade cutting unit
6. Reel speed
7. Fast
8. Slow

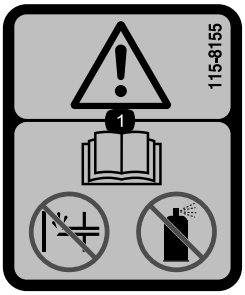

decal115-8155

115-8155

1. Warning—read the *Operator's Manual*, do not prime or use starting fluid.

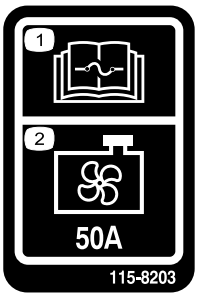

decal115-8203

115-8203

1. Read the *Operator's manual* for fuse information.
2. Radiator fan—50 Amp



decal117-2718

117–2718

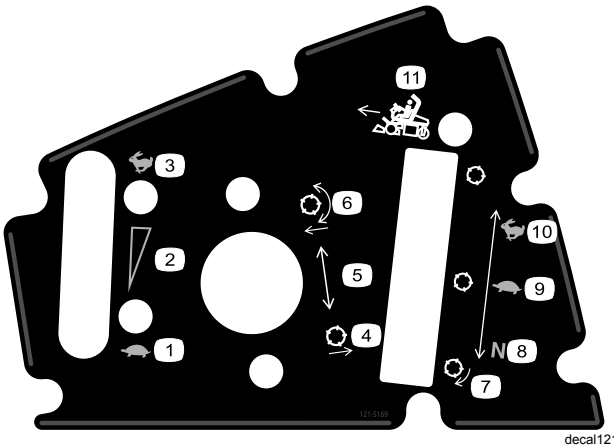

decal121-5169

121–5169

1. Slow
2. Continuous variable setting
3. Fast
4. Raise the reels
5. Reel position setting
6. Lower and engage the reels
7. Reel—backlapping
8. Neutral—use for backlapping
9. Slow—use for mowing
10. Fast—use for transport
11. Functional control lever

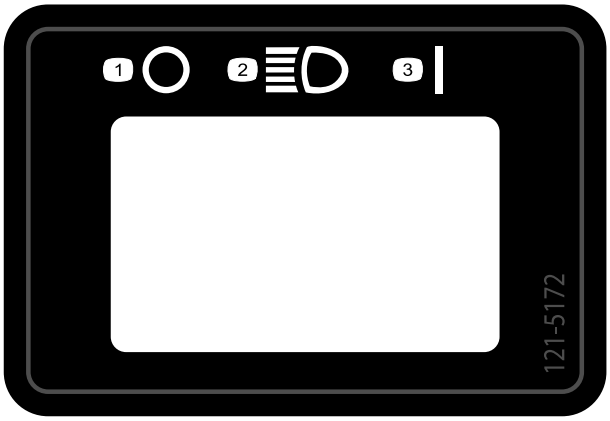

decal121-5172

121–5172

1. Off
2. Headlights
3. On

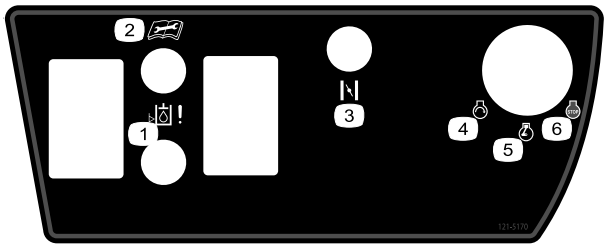

decal121-5170

121–5170

1. Hydraulic oil level
2. Read the *Operator's Manual* before servicing or performing maintenance.
3. Choke (gasoline models only)
4. Engine—start
5. Engine preheat/run
6. Engine—stop

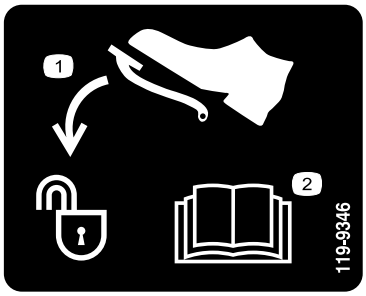

decal119-9346

119-9346

1. Press pedal to unlock
2. Read the *Operator's Manual* for more information.



decalbatterysymbols

Battery Symbols

Some or all of these symbols are on your battery.

1. Explosion hazard
2. No fire, open flames, or smoking.
3. Caustic liquid/chemical burn hazard
4. Wear eye protection.
5. Read the *Operator's Manual.*
6. Keep bystanders a safe distance from the battery.
7. Wear eye protection; explosive gases can cause blindness and other injuries.
8. Battery acid can cause blindness or severe burns.
9. Flush eyes immediately with water and get medical help fast.
10. Contains lead; do not discard.

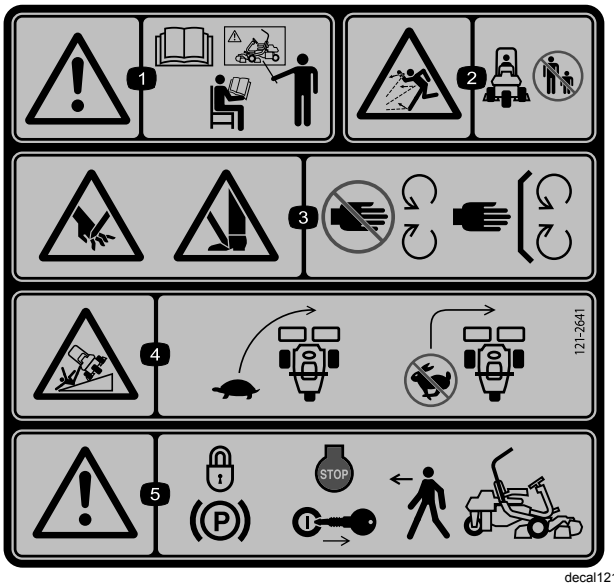

decal121-2641

121–2641

1. Warning—read the *Operator's Manual*, do not operate this machine unless you are trained.
2. Thrown object hazard—keep bystanders a safe distance from the machine.
3. Cutting/dismemberment hazard of hand or foot, mower blade—stay away from moving parts; keep all guards and shields in place.
4. Tipping hazard—slow machine before turning, do not turn at high speeds.
5. Warning—lock the parking brake, stop the engine and remove the ignition key before leaving the machine.

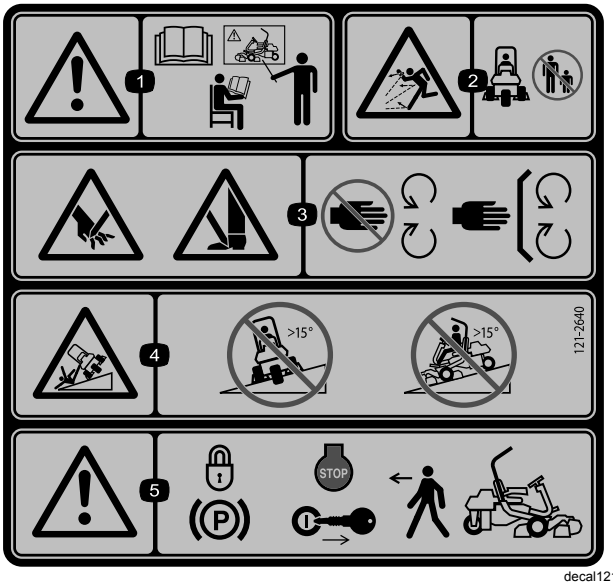

decal121-2640

121–2640

1. Warning—read the *Operator's Manual*, do not operate this machine unless you are trained.
2. Thrown object hazard—keep bystanders a safe distance from the machine
3. Cutting/dismemberment hazard of hand or foot, mower blade—stay away from moving parts; keep all guards and shields in place.
4. Tipping hazard—do not drive across slopes greater than 15 degrees or down slopes greater than 15 degrees.
5. Warning—lock the parking brake, stop the engine and remove the ignition key before leaving the machine.

Setup

Loose Parts

Use the chart below to verify that all parts have been shipped.

Procedure	Description	Qty.	Use
1	Roll bar Bolt (1/2 x 3-3/4 inches) Flange-nut (1/2 inch)	1 4 4	Install the roll bar.
2	Seat completion kit	1	Install the seat to the base.
3	Steering wheel Locknut (1-1/2 inches) Washer Steering wheel cap	1 1 1 1	Install the steering wheel.
4	No parts required	–	Activate and charge the battery.
5	No parts required	–	Install the oil cooler (optional).
6	Grass basket hook Flange bolts	6 12	Install the grass basket hooks.
7	Gauge bar Cutting unit (model 04613, 04614, or 04615) Grass Basket	1 3 3	Install the cutting units.
8	Weight kit, 121–6665 (purchase separately) Note: This kit is not required for units with the 3 wheel drive kit installed.	1	Add rear weight.
9	CE Guard Kit—Part No. 04442 (sold separately)	1	Install the CE guard kit.
10	Warning decal 117-9537	1	Install EU decals, if required.

Media and Additional Parts

Description	Qty.	Use
Operator's Manual (machine) Engine Operator's Manual (engine)	1 1	Read before operating the machine.
Parts Catalog	1	Save for future parts ordering.
Operator Training Materials	1	View before operating the machine.
Pre-delivery Inspection Sheet Noise rating certificate Certificate of compliance	1 1 1	Save for future reference.
Ignition keys	2	Start the engine.

1

Installing the Roll Bar

Parts needed for this procedure:

1	Roll bar
4	Bolt (1/2 x 3-3/4 inches)
4	Flange-nut (1/2 inch)

Procedure

1. Remove the top crate support from the crate.
2. Remove the roll bar from the crate.
3. Install the roll bar into the pockets on each side of the machine, using 4 bolts (1/2 x 3-3/4 inches) and 4 flange-nuts (1/2 inch) (Figure 3).

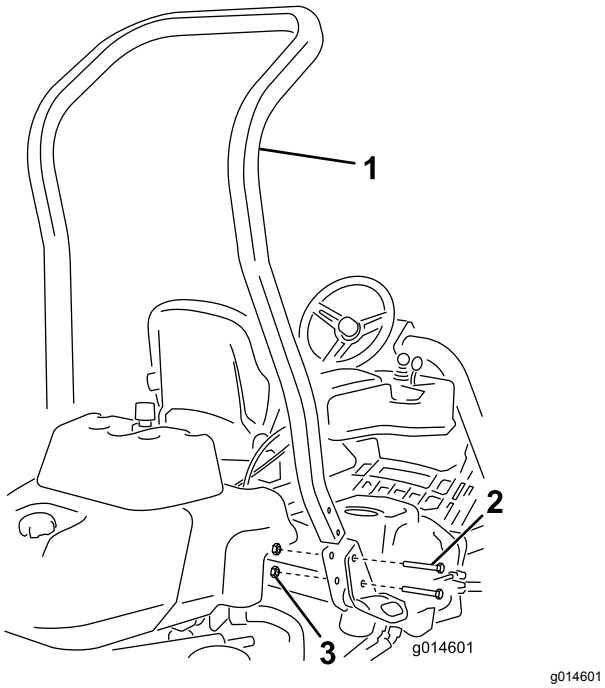

g014601

Figure 3

1. Roll bar
2. Bolt (1/2 x 3-3/4 inches)
3. Flange-nut (1/2 inch)

4. Torque the fasteners to 136 to 149 N-m (100 to 110 ft-lb).

2

Installing the Seat

Parts needed for this procedure:

1	Seat completion kit

Procedure

Acquire your desired seat kit from your distributor and install it as directed in the instruction included with the kit.

3

Installing the Steering Wheel

Parts needed for this procedure:

1	Steering wheel
1	Locknut (1-1/2 inches)
1	Washer
1	Steering wheel cap

Procedure

1. Slide the steering wheel onto the steering shaft (Figure 4).

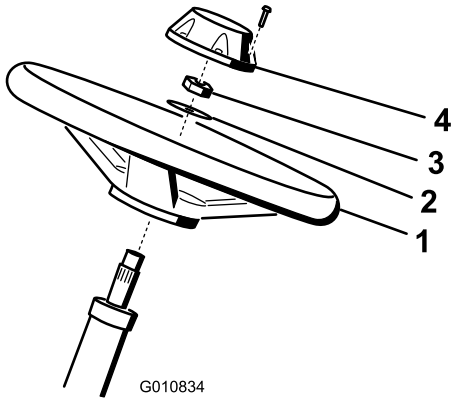

g010834

Figure 4

1. Steering wheel
2. Washer
3. Jam nut
4. Cap

2. Slide the washer onto the steering shaft (Figure 4).

3. Secure the steering wheel to the shaft with a jam nut and tighten it to 27 to 35 N-m (20 to 26 ft-lb) (Figure 4).
4. Install the cap to the steering wheel and secure it with a screw (Figure 4).

4

Activating and Charging the Battery

No Parts Required

Procedure

Use only electrolyte (1.265 specific gravity) to fill the battery initially.

1. Remove the fasteners and battery clamp and lift out the battery.

   Important: **Do not add electrolyte while the battery is in the machine. You could spill it, causing corrosion.**

2. Clean the top of the battery and remove the vent caps (Figure 5).

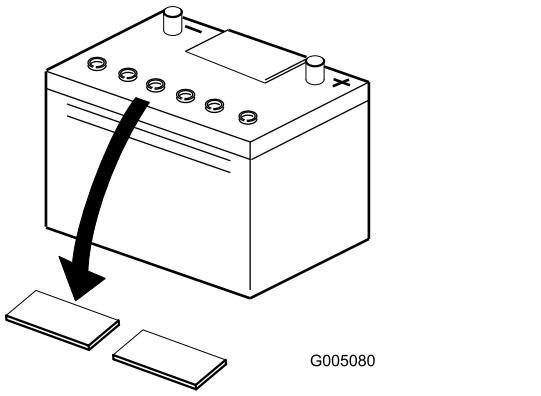

g005080

Figure 5

3. Carefully fill each cell with electrolyte until the plates are covered with about 6 mm (1/4 inch) of fluid (Figure 6).

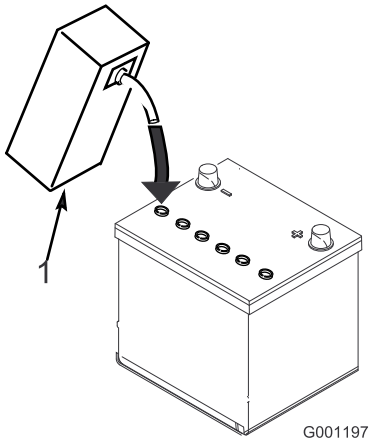

g001197

Figure 6

1. Electrolyte

4. Allow approximately 20 to 30 minutes for the electrolyte to soak into the plates. Fill as necessary to bring the electrolyte to within about 6 mm (1/4 inch) of the bottom of the fill well (Figure 6).

⚠ WARNING

Charging the battery produces gasses that can explode.

Never smoke near the battery and keep sparks and flames away from battery.

5. Connect a 2 to 4 amp battery charger to the battery posts. Charge the battery for 2 hours at 4 amps or for 4 hours at 2 amps until the specific gravity is 1.250 or higher and the temperature is at least 16° C (60° F) with all cells gassing freely.
6. When the battery is charged, disconnect the charger from the electrical outlet and battery posts.

   Note: After the battery has been activated, add only distilled water to replace normal loss, although maintenance-free batteries should not require water under normal operating conditions.

⚠ WARNING

CALIFORNIA
Proposition 65 Warning

Battery posts, terminals, and related accessories contain lead and lead compounds, chemicals known to the State of California to cause cancer and reproductive harm. Wash hands after handling.

⚠ WARNING

Battery terminals or metal tools could short against metal tractor components causing sparks. Sparks can cause the battery gasses to explode, resulting in personal injury.

- **When removing or installing the battery, do not allow the battery terminals to touch any metal parts of the tractor.**
- **Do not allow metal tools to short between the battery terminals and metal parts of the tractor.**

⚠ WARNING

Failure to correctly activate the battery may result in battery gassing and/or premature battery failure.

7. Place the battery on the battery tray and secure it with the battery clamp and fasterners removed previously.
8. Install the positive cable (red) to the positive (+) terminal and then the negative cable (black) to the negative (–) terminal of the battery and secure them with the bolts and nuts (Figure 7). Slide the rubber boot over the positive terminal to prevent a possible short from occurring.

⚠ WARNING

Incorrect battery cable routing could damage the tractor and cables causing sparks. Sparks can cause the battery gasses to explode, resulting in personal injury.

- **Always disconnect the negative (black) battery cable before disconnecting the positive (red) cable.**
- **Always connect the positive (red) battery cable before connecting the negative (black) cable.**

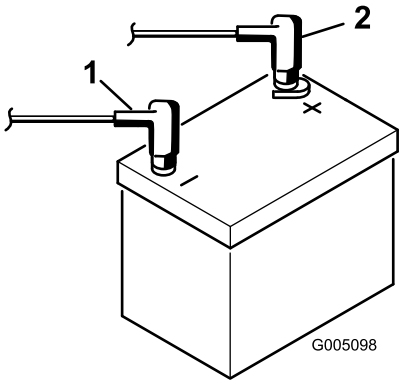

g005098

Figure 7

1. Negative (-)
2. Positive (+)

5

Installing the Oil Cooler (optional)

No Parts Required

Procedure

If you are operating the machine in hot climates, where ambient temperatures are above 29° C (85° F), or using it for heavy-duty use (mowing other than greens, such as fairways or verticutting), install a Hydraulic Oil Cooler Kit, Part No. 117-9314, to the machine.

6

Installing the Grass Basket Hooks

Parts needed for this procedure:

6	Grass basket hook
12	Flange bolts

Procedure

Install the 6 grass basket hooks onto the ends of the suspension arm bars using 12 flange bolts (Figure 8).

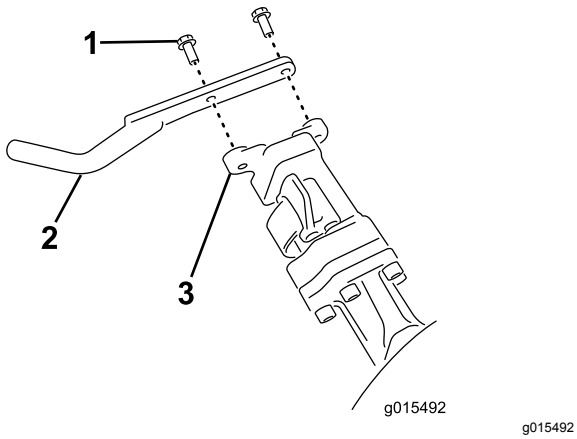

g015492

Figure 8

1. Flange bolt
2. Grass basket hook
3. Suspension arm bar

7

Installing the Cutting Units

Parts needed for this procedure:

1	Gauge bar
3	Cutting unit (model 04613, 04614, or 04615)
3	Grass Basket

Procedure

Note: When sharpening, setting the height-of-cut, or performing other maintenance procedures on the cutting units, store the cutting unit reel motors in the storage location on the front of the suspension arms to prevent damage to them.

Important: **Do not raise the suspension to the transport position when the reel motors are in the holders in the machine frame. Damage to the motors or hoses could result.**

Important: **Whenever the cutting unit has to be tipped to expose bedknife/reel, prop up rear of cutting unit to make sure nuts on back end of bedbar adjusting screws are not resting on work surface (Figure 9).**

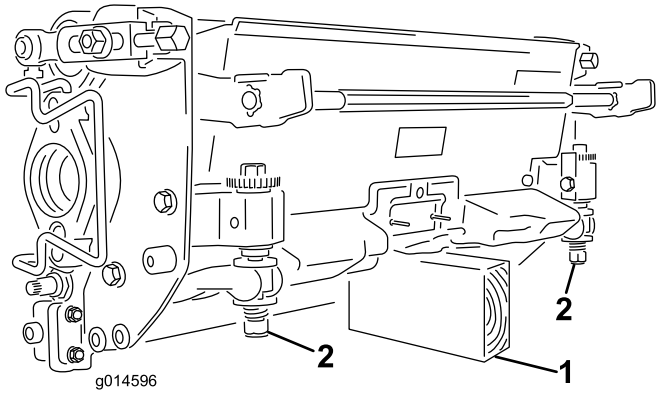

g014596

Figure 9

1. Prop (not provided)
2. Bedknife adjusting screw nut (2)

Note: All cutting units are shipped with the counter weight mounted to the right end and the motor mount and drive coupler mounted to the left end of the cutting unit.

1. Apply grease to the inside diameter of the drive coupler.
2. The cutting unit is shipped without a front roller. Obtain a roller (Model No. 04625, 04626 or 04627) from your local Toro Distributor. Install the roller using the loose parts supplied with the cutting unit and installation instructions included with the roller.
3. If installing the center cutting unit, lift up on the foot rest and swing it up, allowing access to the center cutting unit position (Figure 10).

⚠ CAUTION

The foot rest can pinch fingers if it falls into the closed position.

Keep your fingers clear of the area where the foot rest seats while it is open.

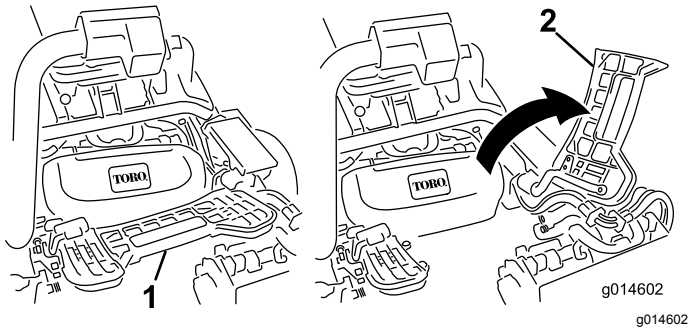

Figure 10

1. Footrest—closed
2. Footrest—open

4. Position the cutting unit under the suspension arm.
5. With the latches on the suspension-arm bar pointing up (i.e., open) (Figure 11), push the suspension arm down so that the bar fits over the bar across the top of the cutting unit (Figure 12).

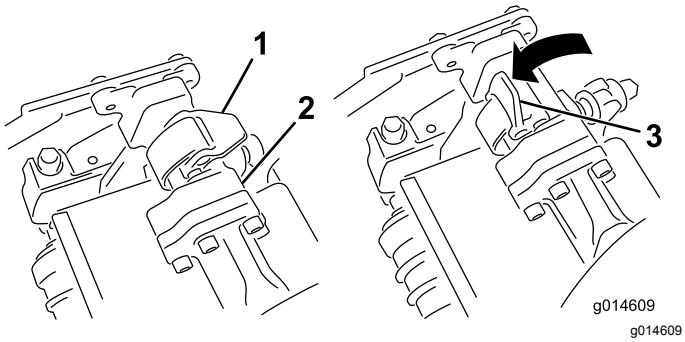

Figure 11

1. Latch—closed position
2. Suspension-arm bar
3. Latch—open position

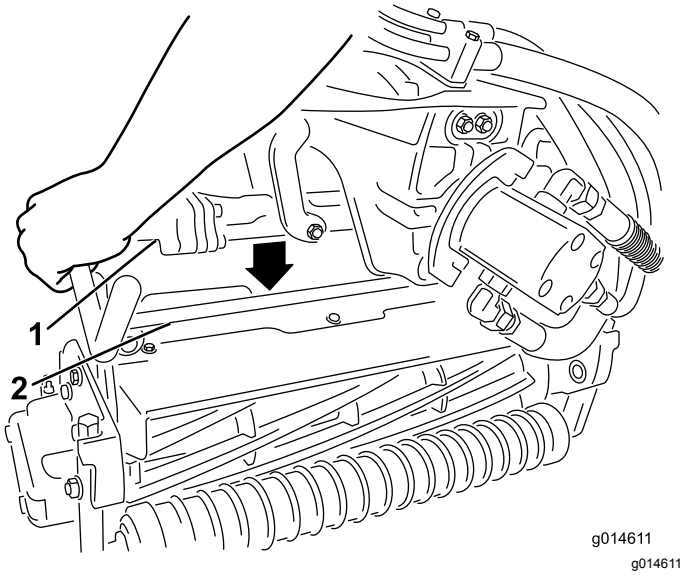

Figure 12

1. Suspension-arm bar
2. Cutting-unit bar

6. Close the latches down and around the cutting-unit bar and lock them in place (Figure 11).

   Note: A “click” can be heard and felt when the latches are properly locked in place.
7. Coat the spline shaft of the cutting unit motor with clean grease (Figure 13).
8. Insert the motor into the left side of the cutting unit (as viewed from the operator's position) and pull the motor retaining bar on the cutting unit toward the motor until you hear an audible “click” from both sides of the motor (Figure 13).

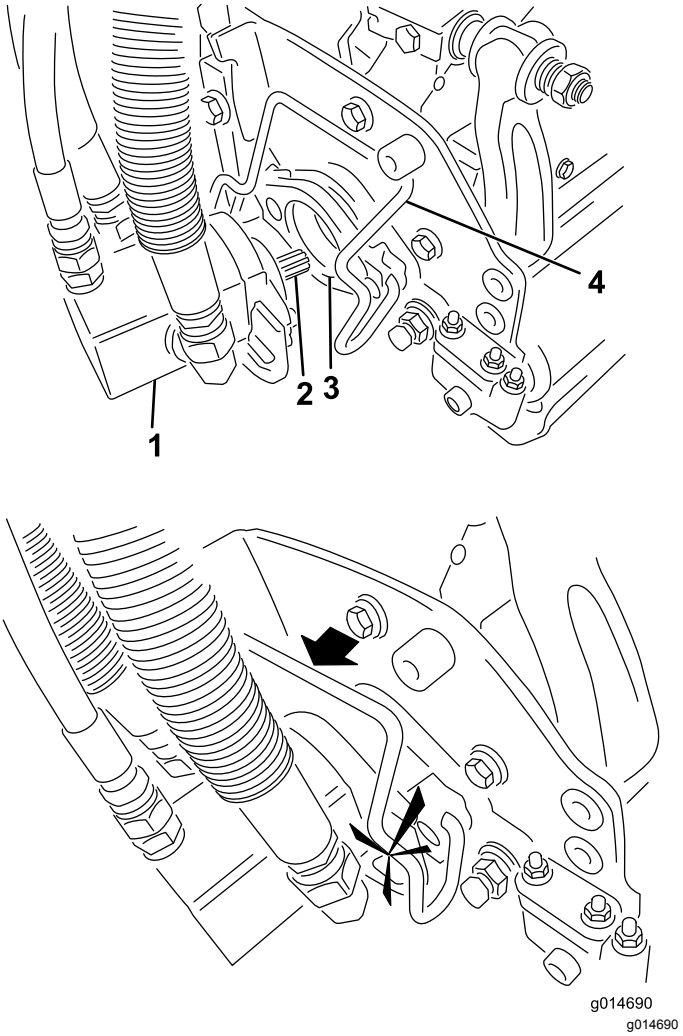

Figure 13

1. Reel motor
2. Spline shaft
3. Cavity
4. Motor retaining bar

9. Mount a grass basket onto the basket hooks on the suspension arm.
10. Repeat this procedure for the other cutting units.

8

Adding Rear Weight

Parts needed for this procedure:

1	Weight kit, 121–6665 (purchase separately) **Note:** This kit is not required for units with the 3 wheel drive kit installed.

Procedure

This unit complies with the ANSI B71.4-2004 and EN 836 Standards when equipped with weight kit 121–6665.

Note: If the unit is equipped with a three wheel drive kit additional weight is not required to meet ANSI B71.4-2004 and EN 836 standards.

9

Installing the CE Guard Kit

Parts needed for this procedure:

1	CE Guard Kit—Part No. 04442 (sold separately)

Procedure

Install the CE guard kit; refer to the CE Guard Kit for Greensmaster 3400 TriFlex Traction Unit Installation instructions.

10

Installing EU Decals

Parts needed for this procedure:

1	Warning decal 117-9537

Procedure

If this machine will be used in the EU, affix the warning decal 117-9537 over English warning decal 117-9536.

Product Overview

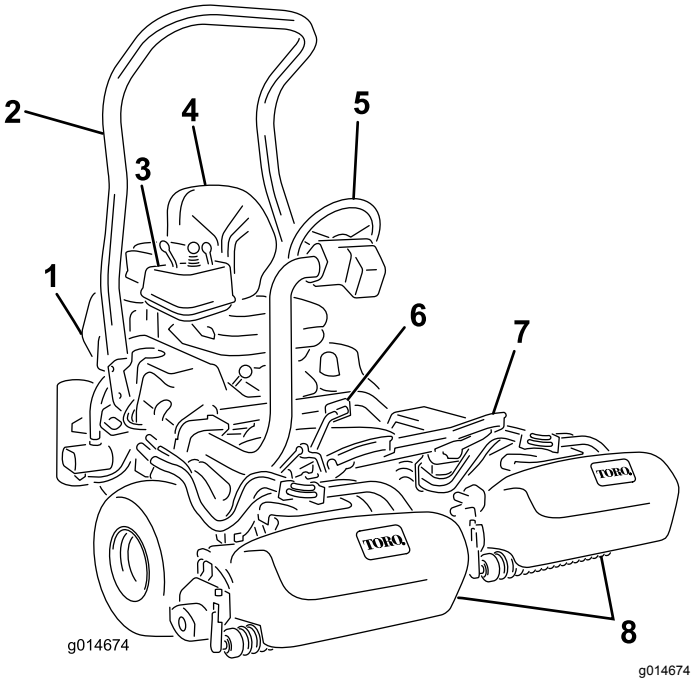

Figure 14

1. Engine
2. Roll bar
3. Control panel
4. Seat
5. Steering wheel
6. Traction pedal
7. Foot rest
8. Reels with grass baskets

Controls

Traction Pedal

The traction pedal (Figure 15) has three functions: to make the machine move forward, to move it backward, and to stop the machine. Press the top of the pedal to move forward and the bottom of the pedal to move backward or to assist in stopping when moving forward. Also, allow the pedal to move to the neutral position to stop the machine. For operator comfort, do not rest the heel of your foot on reverse when operating forward (Figure 16).

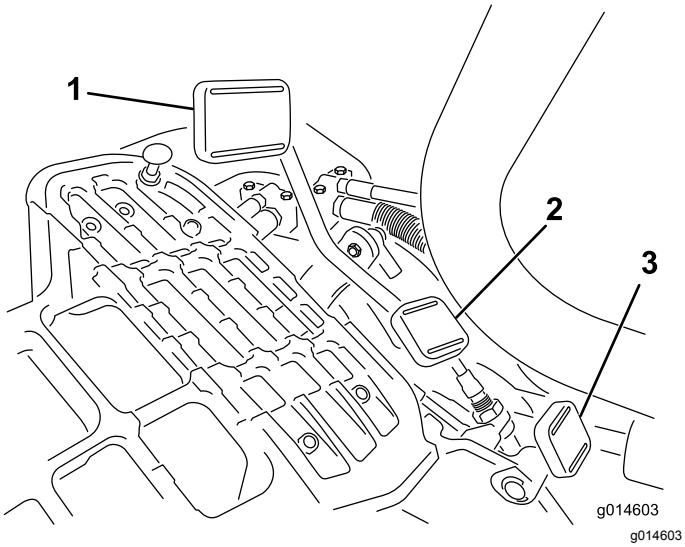

Figure 15

1. Traction pedal—forward
2. Taction pedal—reverse
3. Steering arm locking pedal

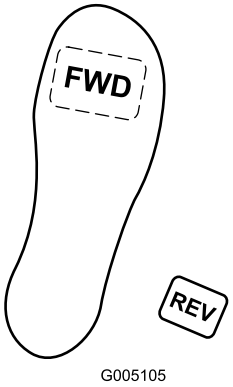

g005105

Figure 16

Steering Arm Locking Pedal

Press the pedal (Figure 15) and raise or lower the steering arm for operator comfort, then, release the pedal to lock the arm in place.

Throttle Control

The throttle control (Figure 17) gives the operator the ability to control the speed of the engine. Moving the throttle control toward the Fast position increases the engine rpm; moving the throttle control toward Slow will decrease the engine rpm. Ground speeds are as follows:

- 3.2 to 8 km/h (2 to 5 mph) forward mowing speed
- 16 km/h (10 mph) maximum transport speed
- 4.0 km/h (2.5 mph) reverse speed

Note: The engine cannot be stopped by the use of the throttle control.

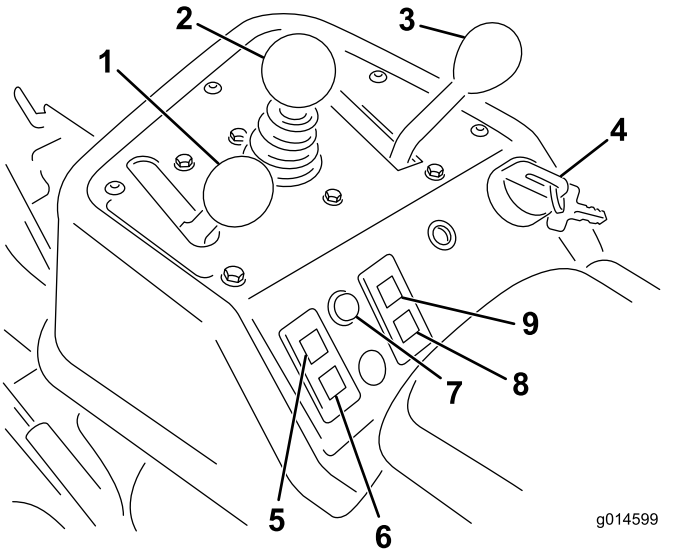

Figure 17

1. Throttle control
2. Raise/Lower Mow Control
3. Functional control lever
4. Ignition switch
5. Engine oil pressure light
6. Battery warning light
7. Service indicator light
8. Glow plug indicator light
9. Water temperature light

Raise/Lower Mow Control

Moving the control (Figure 17) forward during operation lowers the cutting units and starts the reels. Pull back on the control to stop the reels and raise the cutting units. During operation the reels can be stopped by pulling back on the control momentarily and releasing it. Start the reels by moving the control forward.

Functional Control Lever

The functional control lever (Figure 17) provides two traction selections plus a Neutral position. It is permissible to shift from mow to transport or transport to mow (not to neutral) while the machine is in motion. No damage will result.

- Rear Position—neutral and backlapping
- Middle Position—used for mowing operation
- Front Position—used for transport operation

Ignition Switch

Insert the key into the switch (Figure 17) and turn it clockwise as far as possible to the Start position to start the engine. Release the key as soon as the engine starts; the key will move to the On position. Turn the key counterclockwise to the Off position to stop the engine.

Battery Warning Light

The light (Figure 17) glows if the battery charge is low.

Engine Oil Pressure Light

The light (Figure 17) glows if the engine oil pressure drops below a safe level.

Water Temperature Light

The light (Figure 17) glows and the engine automatically shuts down when the engine coolant temperature gets too high. If the engine shuts down, you can start the engine and drive the machine for 10 seconds before it will shutdown again, allowing you to move the machine to a location where you can allow it to cool down.

Service Indicator Light

The service indicator light (Figure 17) illuminates when the machine sensors detect an issue with one of the systems of the machine. If this light illuminates, stop what you are doing and drive to a safe location where you or a service technician can diagnose the problem. For more information on diagnosing system issues using the service indicator light, refer to Diagnosing the Service Indicator Light (page 45).

Glow Plug Indicator Light

When the glow plug indicator light (Figure 17) is lit, it indicates the glow plugs are on.

Note: The glow plug indicator light may illuminate for a short time after the engine has started; this is normal.

Hour Meter

The hour meter (Figure 18) indicates the total hours the machine has operated. It starts to function whenever the key switch is rotated to On.

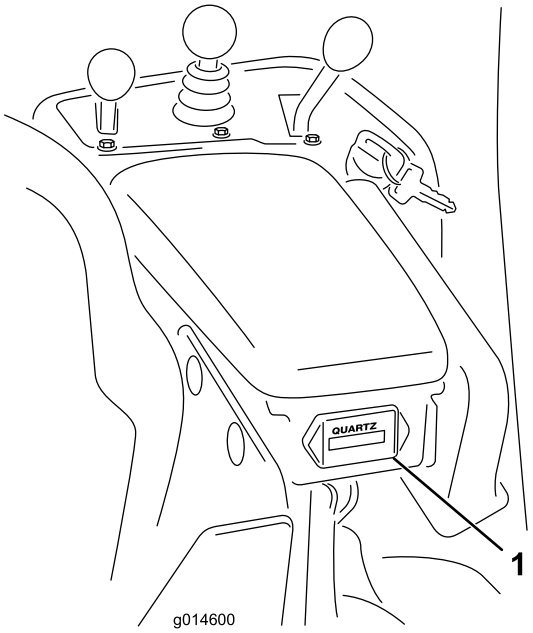

g014600

Figure 18

1. Hour meter

Parking Brake Lever

Pull up on the brake lever (Figure 15) to set the parking brake. Disengage it by pushing it forward and down. Lock the parking brake any time you leave the machine.

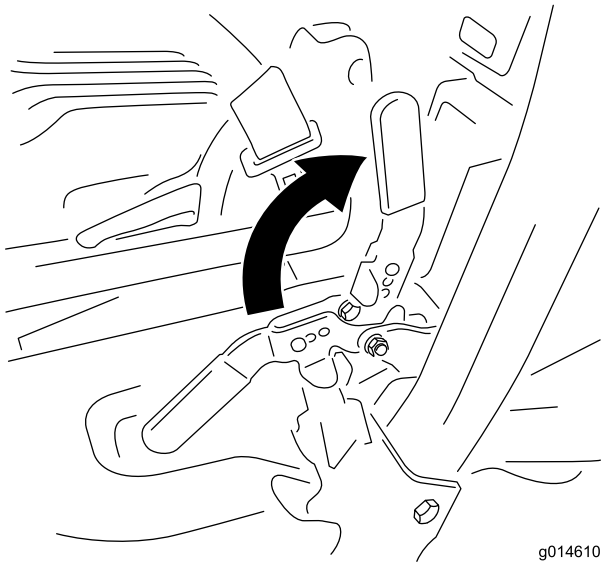

g014610

Figure 19

Backlap Lever

The backlap lever is located under the plastic cover to the left of the seat. Use the backlap lever (Figure 20) in conjunction with the raise/lower mow control lever and the reel speed control for backlapping the reels.

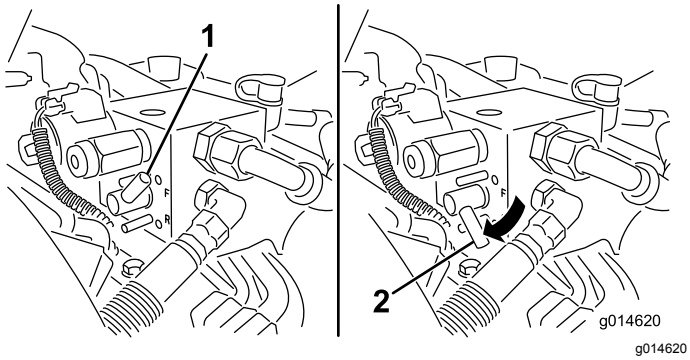

Figure 20

1. Backlap lever—mow position
2. Backlap lever—backlap position

Reel Speed Control

The reel speed control is located under the plastic cover to the left of the seat. Use the reel speed control (Figure 21) to adjust the rpm of the reels.

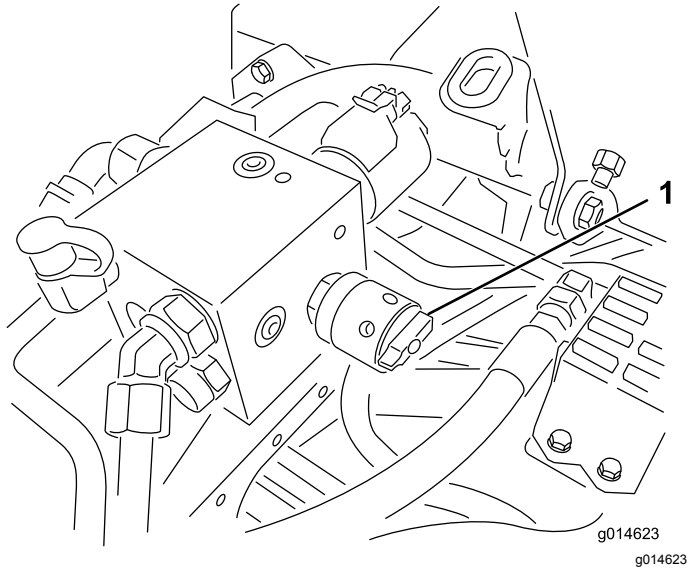

Figure 21

1. Reel speed control

Seat Adjusting Lever

The seat adjusting lever is located on the front, right corner of the seat (Figure 22), allowing you to adjust the seat fore and aft.

Note: If you need additional adjustment on the seat, you can remove the four bolts securing the seat to the base and move the seat to the second set of mounting holes provided.

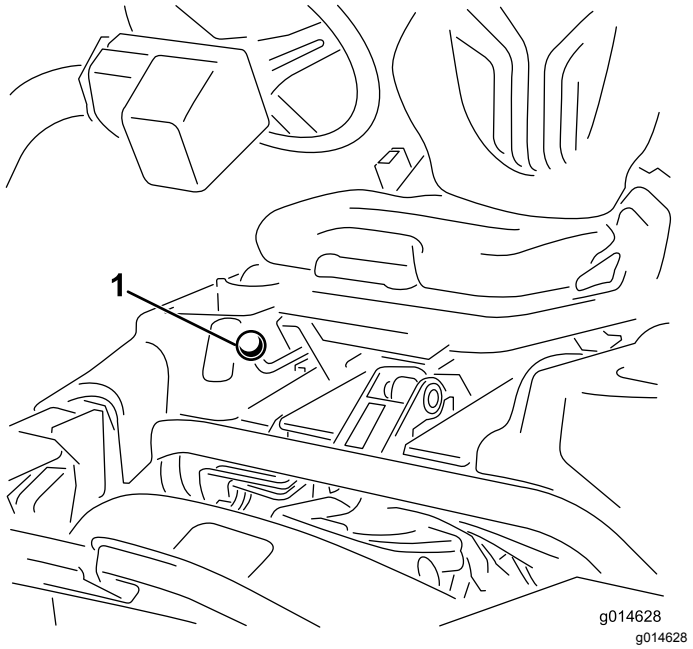

Figure 22

1. Seat adjusting handle

Fuel Shutoff Valve

Close the fuel shutoff valve (Figure 23), behind the seat and under the fuel tank, when storing or transporting the machine on a truck or trailer.

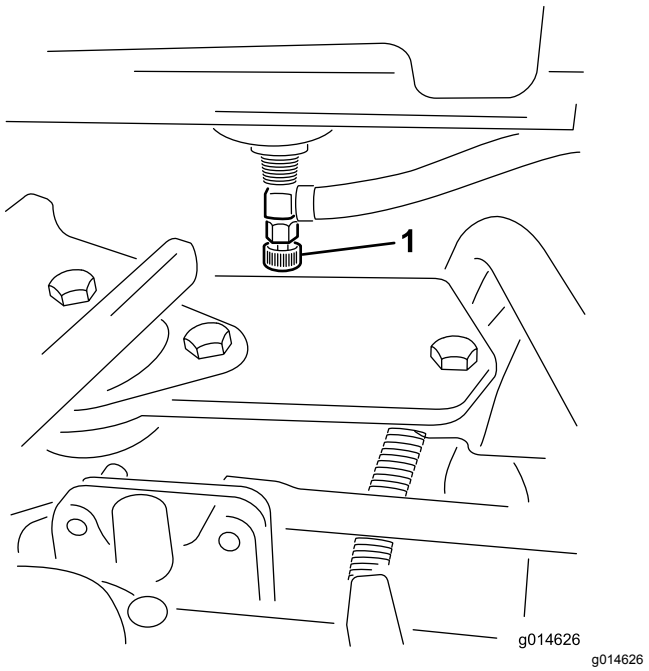

Figure 23

1. Fuel shutoff (under the fuel tank)

Specifications

Note: Specifications and design are subject to change without notice.

Width of cut	151 cm (59.5 inches)
Wheel tread	128 cm (50.5 inches)
Wheel base	123 cm (48.6 inches)
Overall length (w/baskets)	249 cm (98.0 inches)
Overall width	179 cm (70.62 inches)
Overall height	205 cm (80.83 inches)
Net Weight w/reels (11 Blade)	696 kg (1,535 lb)

Attachments/Accessories

A selection of Toro approved attachments and accessories are available for use with the machine to enhance and expand its capabilities. Contact your Authorized Service Dealer or Distributor or go to www.Toro.com for a list of all approved attachments and accessories.

Operation

Note: Determine the left and right sides of the machine from the normal operating position.

Think Safety First

Please carefully read all of the safety instructions and symbols in the safety section. Knowing this information could help you or bystanders avoid injury.

The use of protective equipment, such as but not limited to, for eyes, ears, feet, and head is recommended.

Checking the Engine Oil

The engine is shipped with oil in the crankcase; however, the oil level must be checked before and after the engine is first started.

Crankcase capacity is approximately 3.7 L (3.9 quarts) with the filter.

Use high-quality engine oil that meets the following specifications:

- API Classification Level Required: CH–4, CI–4 or higher.
- Preferred oil: SAE 10W–30
- Alternate oil: SAE 15W–40

Toro Premium Engine oil is available from your distributor in the 10W–30 viscosity. See the parts catalog for part numbers.

Note: The best time to check the engine oil is when the engine is cool before it has been started for the day. If it has already been run, allow the oil to drain back down to the sump for at least 10 minutes before checking. If the oil level is at or below the Add mark on the dipstick, add oil to bring the oil level to the Full mark. **Do not overfill**. If the oil level is between the Full and Add marks, no oil addition is required.

Important: **Be sure to keep the engine oil level between the upper and lower limits on the oil gauge. Engine failure may occur as a result of over filling or under filling the engine oil.**

1. Position the machine on a level surface.
2. Remove the dipstick and wipe it with a clean rag (Figure 25).

   Important: **Make sure that the dipstick is removed while filling the engine with oil. When adding engine oil or filling oil, there *must be* clearance between the oil fill device and the oil fill hole in the valve cover as shown in Figure 24. This clearance is necessary to permit venting when filling,**

which prevents oil from overrunning into breather.

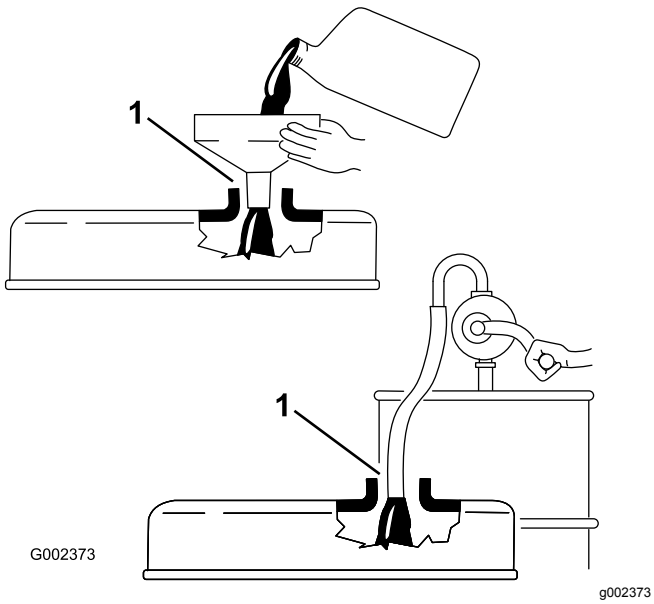

Figure 24

1. Note clearance

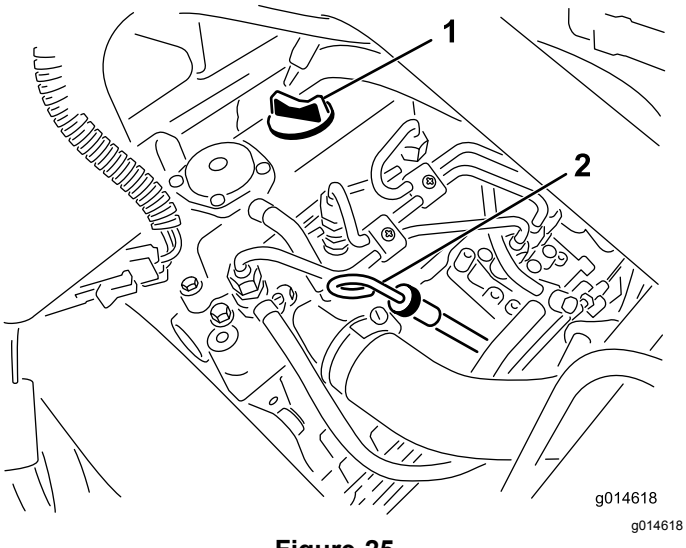

Figure 25

1. Filler cap
2. Dipstick

3. Push the dipstick into the tube and make sure it is seated fully.
4. Remove the dipstick from the tube and check the level of oil.

   Note: If the oil level is low, remove the filler cap from the valve cover and **slowly** add enough oil to raise the level to the Full mark on the dipstick.

   Add the oil slowly and check the level often during this process. **Do not overfill.**
5. Replace the dipstick.
6. Start and run the engine at idle for 30 seconds, then shut the engine off. Wait 30 seconds, then repeat steps 2–5.

   Important: **Check the level of oil every 8 operating hours or daily. Change the oil and filter initially after the first 50 hours of operation, thereafter change the oil and the filter every 150 hours. However, change the oil more frequently when the engine is operated in extremely dusty or dirty conditions.**
7. Install the filler cap and dipstick firmly in place.

Filling the Fuel Tank

Use only clean, fresh diesel fuel or biodiesel fuels with low (<500 ppm) or ultra low (<15 ppm) sulfur content. The minimum cetane rating should be 40. Purchase fuel in quantities that can be used within 180 days to ensure fuel freshness.

Fuel tank capacity: 22.7 L (6 U.S. gallons)

Use summer grade diesel fuel (No. 2-D) at temperatures above -7° C (20° F) and winter grade (No. 1-D or No. 1-D/2-D blend) below that temperature. Use of winter grade fuel at lower temperatures provides lower flash point and cold flow characteristics which will ease starting and reduce fuel filter plugging.

Use of summer grade fuel above -7° C (20° F) will contribute toward longer fuel pump life and increased power compared to winter grade fuel.

⚠ DANGER

Under certain conditions, diesel fuel and fuel vapors are highly flammable and explosive. A fire or explosion from fuel can burn you and others and can cause property damage.

- **Use a funnel and fill the fuel tank outdoors, in an open area, when the engine is off and is cold. Wipe up any fuel that spills.**
- **Do not fill the fuel tank completely full. Add fuel to the fuel tank until the level is 6 to 13 mm (1/4 to 1/2 inch) below the bottom of the filler neck. This empty space in the tank allows the fuel to expand.**
- **Never smoke when handling fuel, and stay away from an open flame or where fuel fumes may be ignited by a spark.**
- **Store fuel in a clean, sealed, safety-approved container.**

⚠ DANGER

In certain conditions, fuel is extremely flammable and highly explosive. A fire or explosion from fuel can burn you and others and can damage property.

- **Fill the fuel tank outdoors, in an open area, when the engine is cold. Wipe up any fuel that spills.**
- **Do not fill the fuel tank completely full. Add fuel to the fuel tank until the level is 25 mm (1 inch) below the bottom of the filler neck. This empty space in the tank allows fuel to expand.**
- **Never smoke when handling fuel, and stay away from an open flame or where fuel fumes may be ignited by a spark.**
- **Store fuel in an approved container and keep it out of the reach of children. Never buy more than a 30-day supply of fuel.**
- **Always place fuel containers on the ground away from your vehicle before filling**
- **Do not fill fuel containers inside a vehicle or on a truck or trailer bed because interior carpets or plastic truck bed liners may insulate the container and slow the loss of any static charge.**
- **When practical, remove gas-powered equipment from the truck or trailer and refuel the equipment with its wheels on the ground.**
- **If this is not possible, then refuel such equipment on a truck or trailer from a portable container, rather than from a fuel dispenser nozzle.**
- **If a fuel dispenser nozzle must be used, keep the nozzle in contact with the rim of the fuel tank or container opening at all times until fueling is complete.**

1. Clean around the fuel tank cap (Figure 26).

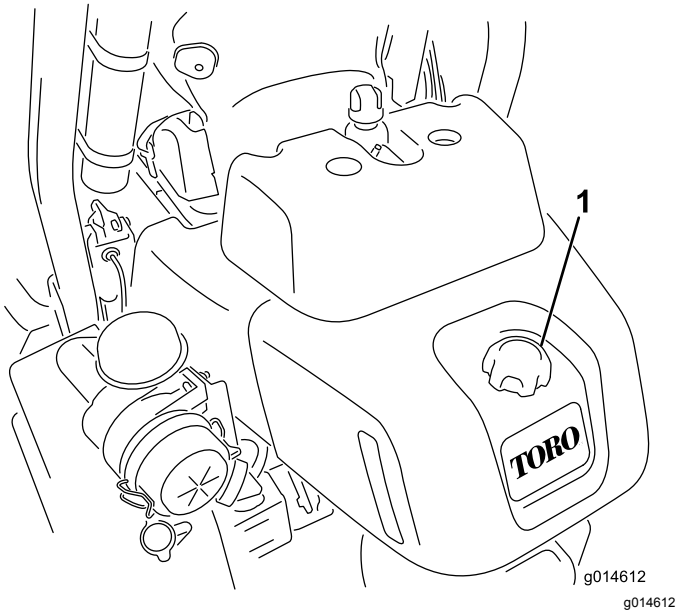

g014612

Figure 26

1. Fuel tank cap

2. Remove the fuel tank cap.
3. Fill the tank until the level is 6 to 13 mm (1/4 to 1/2 inch) below the bottom of the filler neck.

   Important: **Do not overfill.**
4. Install the cap.
5. Wipe up any fuel that may have spilled.

Using Biodiesel Fuel

This machine can also use a biodiesel blended fuel of up to B20 (20% biodiesel, 80% petrodiesel). The petrodiesel portion should be low or ultra low sulfur. Observe the following precautions:

- The biodiesel portion of the fuel must meet specification ASTM D6751 or EN14214.
- The blended fuel composition should meet ASTM D975 or EN590.
- Painted surfaces may be damaged by biodiesel blends.
- Use B5 (biodiesel content of 5%) or lesser blends in cold weather
- Monitor seals, hoses, gaskets in contact with fuel as they may be degraded over time.
- Fuel filter plugging may be expected for a time after converting to biodiesel blends.
- Contact your distributor if you wish for more information on biodiesel

Checking the Cooling System

The capacity of the cooling system is approximately 4.6 L (4.9 quarts). Refer to Cleaning the Radiator Screen (page 41).

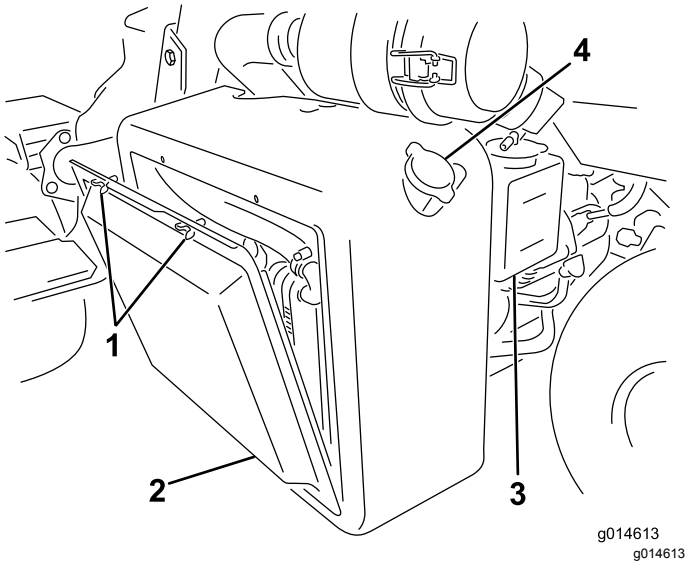

Figure 27

1. Wing bolts
2. Radiator screen
3. Reserve tank
4. Radiator fill cap

The cooling system is filled with a 50/50 solution of water and permanent ethylene glycol antifreeze. Check the level of the coolant at the beginning of each day before starting the engine.

⚠ CAUTION

If the engine has been running, the pressurized, hot coolant can escape and cause burns.

- **Do not open the radiator cap when the engine is running.**
- **Use a rag when opening the radiator cap, and open the cap slowly to allow steam to escape.**

1. Park the machine on a level surface.
2. Check the coolant level (Figure 28).

   Note: It should be between the lines on the reserve tank when the engine is cold.

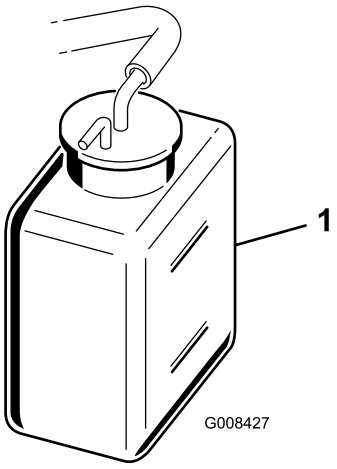

Figure 28

1. Reserve tank

3. If the coolant is low, remove the reserve tank cap and add a 50/50 mixture of water and permanent ethylene glycol antifreeze. **Do not overfill.**
4. Install the reserve tank cap.

Checking the Hydraulic Fluid Level

Before operating the machine each day, check level of the hydraulic fluid in the white plastic window on the front of the hydraulic fluid reservoir (behind the seat on the left side). The fluid should be between the lines in the window; if not, add an appropriate fluid as described in the following sections:

The machines reservoir is filled at the factory with approximately 20.8 L (5.5 gallons) of high quality hydraulic fluid. **Check the level of the hydraulic fluid before the engine is first started and daily thereafter**. The recommended replacement fluid is as follows:

> **Toro Premium All Season Hydraulic Fluid** (Available in 5 gallon pails or 55 gallon drums. See parts catalog or Toro distributor for part numbers.)

Alternate fluids: If the Toro fluid is not available, other fluids may be used provided they meet all the following material properties and industry specifications. We do not recommend the use of synthetic fluid. Consult with your lubricant distributor to identify a satisfactory product

Note: Toro will not assume responsibility for damage caused by improper substitutions, so use only products from reputable manufacturers who will stand behind their recommendation.

High Viscosity Index/Low Pour Point Anti-wear Hydraulic Fluid, ISO VG 46	
Material Properties:	
Viscosity, ASTM D445	cSt @ 40°C 44 to 50 cSt @ 100°C 7.9 to 8.5
Viscosity Index ASTM D2270	140 to 160
Pour Point, ASTM D97	-34°F to -49°F
Industry Specifications:	
Vickers I-286-S (Quality Level), Vickers M-2950-S (Quality Level), Denison HF-0	

Important: **The ISO VG 46 Multigrade fluid has been found to offer optimal performance in a wide range of temperature conditions. For operation in consistently high ambient temperatures, 18° C (65° F) to 49° C (120° F), ISO VG 68 hydraulic fluid may offer improved performance.**

Premium Biodegradable Hydraulic Fluid-Mobil EAL EnviroSyn 46H

Important: **Mobil EAL EnviroSyn 46H is the only synthetic biodegradable fluid approved by Toro. This fluid is compatible with the elastomers used in Toro hydraulic systems and is suitable for a wide-range of temperature conditions. This fluid is compatible with conventional mineral oils, but for maximum biodegradability and performance the hydraulic system should be thoroughly flushed of conventional fluid. The oil is available in 19 L (5 gallon) containers or 55 gallon drums from your Mobil Distributor.**

Important: **Many hydraulic fluids are almost colorless, making it difficult to spot leaks. A red dye additive for the hydraulic system oil is available in 20 ml (2/3 oz) bottles. One bottle is sufficient for 15-22 L (4-6 gallons) of hydraulic oil. Order part no. 44-2500 from your authorized Toro distributor. *This red dye is not recommended for use with biodegradable fluids.***

Important: **Regardless of hydraulic fluid type used, any machine used for mowing fairways, verticutting or used during ambient temperatures above 29° C (85° F) should have Oil Cooler Kit, Part No. 117-9314, installed.**

Filling the Hydraulic Tank

1. Position the machine on a level surface.

   Note: Make sure the machine has cooled down so the oil is cold.

2. Remove the cap from the reservoir (Figure 29).

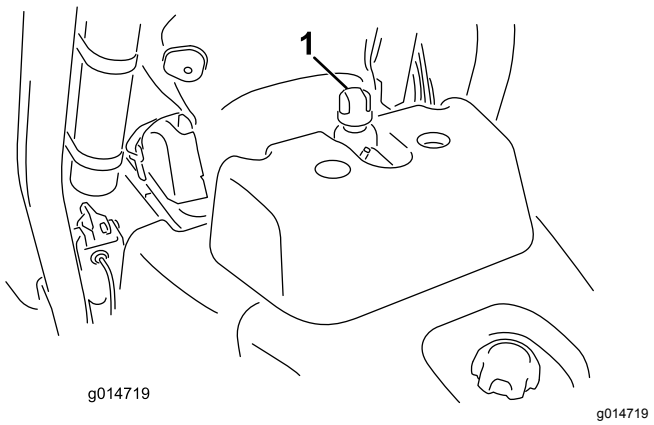

Figure 29

1. Hydraulic reservoir cap

3. Slowly fill the reservoir with the appropriate hydraulic fluid until the level reaches the Full mark in the white window in the front of the reservior. **Do not overfill.**

   Important: **To prevent system contamination, clean the top of the hydraulic fluid containers before puncturing. Ensure the pour spout and funnel are clean.**

4. Install the reservoir cap and wipe up any fluid that may have spilled.

   Important: **Check level of hydraulic fluid before engine is first started and daily thereafter.**

Draining Water from the Fuel Filter

Service Interval: Before each use or daily

1. Position the machine on a level surface and stop the engine.
2. Place a drain pan under the fuel filter.
3. Open the drain plug on the fuel filter approximately one turn and drain any accumulated water (Figure 30).

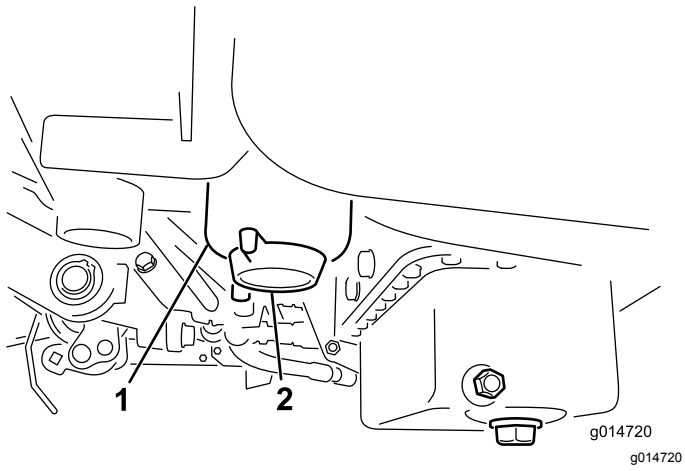

Figure 30

1. Fuel filter
2. Drain plug

4. Tighten the plug after draining.

   Note: Because the accumulated water will be mixed with diesel fuel, drain the fuel filter into a suitable container and dispose of it properly.

Checking the Tire Pressure

The tires are over-inflated at the factory for shipping purposes. Reduce the pressure to the proper levels before starting the unit.

Vary the tire pressure for the front wheels, depending upon your turf conditions, from a minimum of 83 to a maximum of 110 kPa (12 psi to 16 psi).

Vary the tire pressure for the rear wheel from a minimum of 83 to a maximum of 110 kPa (12 psi to 16 psi).

Checking the Torque of the Wheel Nuts

⚠ WARNING

Failure to maintain proper torque of the wheel nuts could result in personal injury.

Torque the wheel nuts to 94.4-122 N-m (70-90 ft-lb) after 1-4 hours of operation and again after 10 hours of operation. Torque every 200 hours thereafter.

Checking the Reel-to-Bedknife Contact

Each day before operating the machine, check the reel-to-bedknife contact, regardless if the quality of cut had previously been acceptable. There must be light contact across the full length of the reel and bedknife; refer to Adjusting the Reel to Bedknife in the Cutting Unit *Operator's Manual*.

Breaking-in the Machine

Refer to the Engine Manual supplied with the machine for oil change and maintenance procedures recommended during the break-in period.

Only 8 hours of mowing operation is required for the break-in period.

Since the first hours of operation are critical to future dependability of the machine, monitor its functions and performance closely so that minor difficulties, which could lead to major problems, are noted and can be corrected. Inspect the machine frequently during break-in for signs of oil leakage, loose fasteners, or any other malfunction.

To ensure optimum performance of the brake system, burnish (break-in) the brakes before using the machine. To burnish the brakes, firmly apply the brakes and drive the machine at mowing speed until the brakes are hot, as indicated by their smell. An adjustment to the brakes may be required after break-in; refer to Adjusting the Brakes.

Starting and Stopping the Machine

Note: Inspect the areas beneath the mowers to be certain they are clear of debris.

Starting the Machine

Important: **Do not use ether or other types of starting fluid.**

1. Be sure the parking brake is set, the raise/lower mow control is disengaged, and the functional control is in the neutral position.
2. Remove your foot from the traction pedal and make sure the pedal is in the neutral position.
3. Move the throttle lever to the Slow position.
4. Insert the key into the switch and rotate it to On. Hold it in the On position until the glow plug indicator light goes off (approximately 6 seconds).
5. Immediately turn the ignition key to the Start position. Release the key when the engine starts and allow it to move to the On position. Move the throttle control to Slow.

   Important: **To prevent overheating of the starter motor, do not engage the starter**

longer than 10 seconds. After 10 seconds of continuous cranking, wait 60 seconds before engaging the starter motor again.

6. Allow the engine to warm up for a few minutes before operating.

   Important: **When the engine is started for the first time, or after an overhaul of the engine, operate the machine in forward and reverse for one to two minutes. Turn the steering wheel to the left and right to check the steering response. Then shut the engine off (see Stopping in Starting and Stopping the Engine) and wait for all moving parts to stop. Check for oil leaks, loose parts and any other noticeable malfunctions.**

Stopping the Machine

1. Move the throttle control to Slow, disengage the raise/lower mow control, and move the functional control to neutral.
2. Rotate the starter key to Off to shut the engine off. Remove the key from the switch to prevent accidental starting.
3. Close the fuel shut-off valves before storing the machine.

Checking the Safety Interlock System

⚠ CAUTION

If the safety interlock switches are disconnected or damaged the machine could operate unexpectedly causing personal injury.

- **Do not tamper with the interlock switches.**
- **Check the operation of the interlock switches daily and replace any damaged switches before operating the machine.**

The purpose of the safety interlock system is to prevent operation of the machine where there is possible injury to the operator or the machine.

- The traction pedal is in neutral.
- The functional control lever is in neutral.

The safety interlock system prevents the machine from moving unless:

- The parking brake is off.
- The operator is seated.
- The functional control lever is in Mow or Transport.

The safety interlock system prevents the reels from operating unless the functional control lever is in the Mow position.

Perform the following system checks daily to be sure the interlock system is operating correctly:

1. Sit on the seat, move the traction pedal to Neutral, move the functional control lever to Neutral, and engage the parking brake.
2. Try to depress the traction pedal.

   Note: The pedal should not depress, which means that the interlock system is operating correctly. Correct the problem if it is not operating properly.
3. Sit on the seat, move the traction pedal to Neutral, move the functional control lever to Neutral, and engage the parking brake.
4. Move the functional control lever to mow or transport and try to start the engine.

   Note: The engine should not crank, which means that the interlock system is operating correctly.

   Correct the problem if it is not operating properly.
5. Sit on the seat, move the traction pedal to Neutral, move the functional control lever to Neutral, and engage the parking brake.
6. Start the engine and move the functional control lever to mow or transport.

   Note: The engine should kill, which means that the interlock system is operating correctly.

   Correct the problem if it is not operating properly.
7. Sit on the seat, move the traction pedal to Neutral, move the functional control lever to Neutral, and engage the parking brake.
8. Start the engine.
9. Release the parking brake, move the functional control lever to mow, and rise from the seat.

   Note: The engine should kill, which means that the interlock system is operating correctly.

   Correct the problem if it is not operating properly.
10. Sit on the seat, move the traction pedal to Neutral, move the functional control lever to Neutral, and engage the parking brake.
11. Start the engine.
12. Move the raise/lower mow control forward to lower the cutting units. The cutting units should lower but not start rotating.

    Note: If they do, the interlock system is not operating correctly.

    Correct the problem if it is not operating properly.

Installing and Removing the Cutting Units

Installing the Cutting Units

1. Lift up on the foot rest and swing it open, allowing access to the center cutting unit position (Figure 31).

⚠ CAUTION

The foot rest can pinch fingers if it falls into the closed position.

Keep your fingers clear of the area where the foot rest seats while it is open.

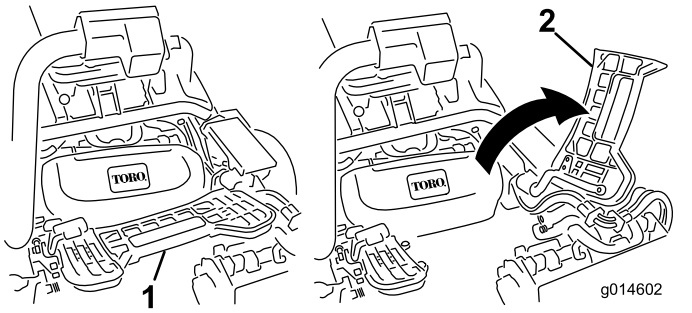

Figure 31

1. Footrest—closed
2. Footrest—open

2. Position the cutting unit under the center suspension arm.
3. With the latches on the suspension-arm bar pointing up (i.e., open) (Figure 32), push the suspension arm down so that the bar fits over the bar across the top of the cutting unit (Figure 33).

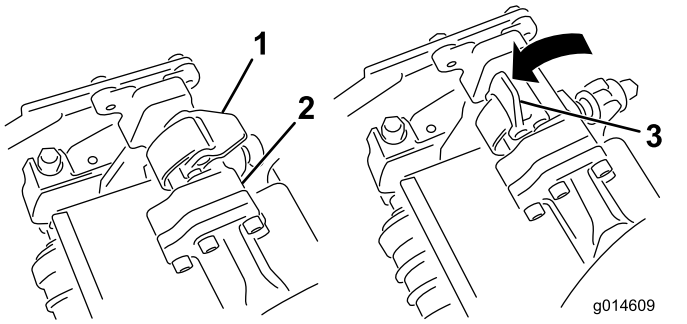

Figure 32

1. Latch—closed position
2. Suspension-arm bar
3. Latch—open position

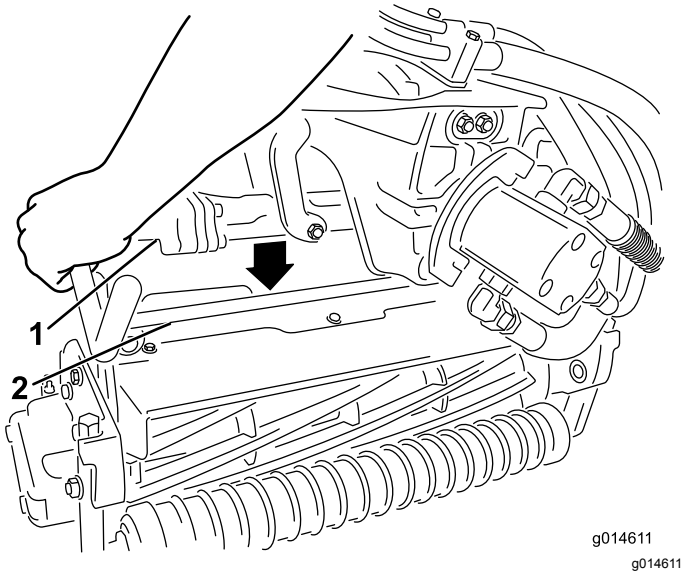

Figure 33

1. Suspension-arm bar
2. Cutting-unit bar

4. Close the latches down and around the cutting-unit bar and lock them in place (Figure 32).

   Note: A “click” can be heard and felt when the latches are properly locked in place.
5. Coat the spline shaft of the cutting unit motor with clean grease (Figure 34).
6. Insert the motor into the left side of the cutting unit (as viewed from the operator's position) and pull the motor retaining bar on the cutting unit toward the motor until you hear an audible “click” from both sides of the motor (Figure 34).

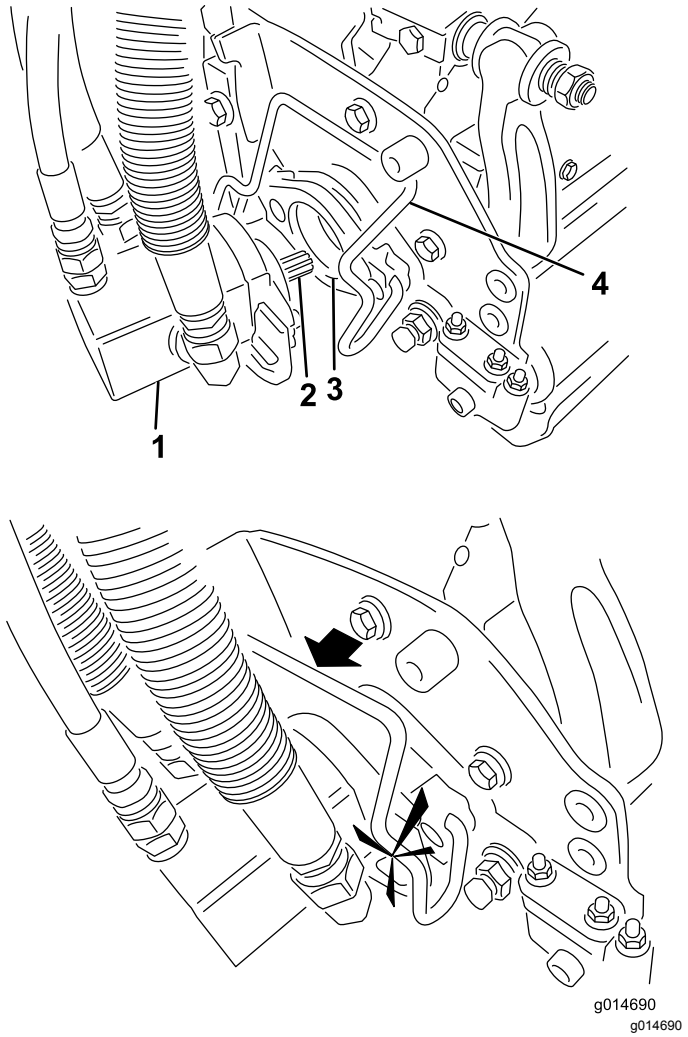

Figure 34

1. Reel motor
2. Spline shaft
3. Cavity
4. Motor retaining bar

7. Mount a grass basket onto the basket hooks on the suspension arm.
8. Repeat this procedure for the other cutting units.

Removing the Cutting Units

1. Park the machine on a clean level surface, lower the cutting units to the ground until the suspension hydraulics are fully extended, stop the engine, and set the parking brake.
2. Push the motor retaining bar out of the slots on the motor towards the cutting unit and remove the motor from the cutting unit.

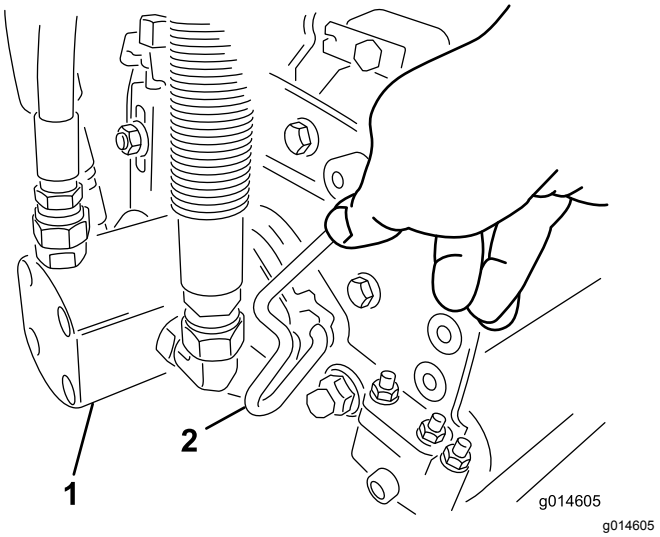

Figure 35

1. Reel motor
2. Motor retaining bar

3. Move the motor to the storage location on the front of the suspension arm (Figure 36).

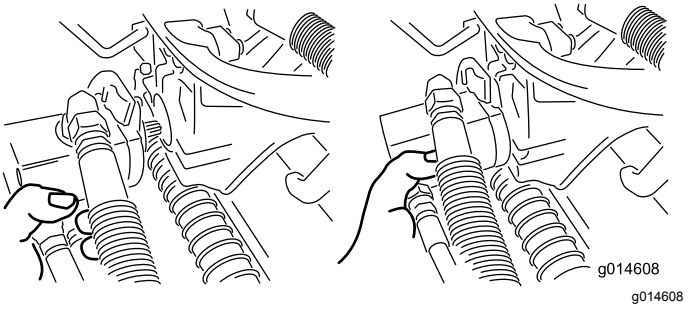

Figure 36

Note: When sharpening, setting the height-of-cut, or performing other maintenance procedures on the cutting units, store the cutting unit reel motors in the storage location on the front of the suspension arms to prevent damage to them.

Important: **Do not raise the suspension to the transport position when the reel motors are in the holders in the machine frame. Damage to the motors or hoses could result. If you must move the traction unit without the cutting units installed, secure them to the suspension arms using cable ties.**

4. Open the latches on the suspension-arm bar of the cutting unit you are removing (Figure 32).
5. Disconnect the latches from the cutting-unit bar.
6. Roll the cutting unit out from under the suspension arm.
7. Repeat steps 2 through 6 for the other cutting units as required.

Setting the Reel Speed

To achieve a consistent, high quality–of–cut and a uniform after cut appearance, it is important that the reel speed control (located on the manifold block under the cover to the left of the seat) be correctly set.

Adjust the reel speed control as follows:

1. Select the height-of-cut at which the cutting units are set.
2. Choose the desired ground speed best suited for conditions.
3. Using the appropriate graph (See Figure 37) for 5, 8, 11, or 14 blade cutting units, determine the proper reel speed setting.

	5		8		11		14
	3.8 MPH 6.1 Km/h	5.0 MPH 8.0 Km/h	3.8 MPH 6.1 Km/h	5.0 MPH 8.0 Km/h	3.8 MPH 6.1 Km/h	5.0 MPH 8.0 Km/h	3.8 MPH 6.1 Km/h
0.062"/ 1.6mm	N/R	N/R	9	N/R	9	N/R	9
0.094"/ 2.4mm	N/R	N/R	9	N/R	9	N/R	9
0.125"/ 3.2mm	N/R	N/R	9	N/R	9	N/R	9
0.156"/ 4.0mm	N/R	N/R	9	N/R	9	N/R	N/R
0.188"/ 4.8mm	N/R	N/R	9	N/R	7	N/R	N/R
0.218"/ 5.5mm	N/R	N/R	9	N/R	6	N/R	N/R
0.250"/ 6.4mm	7	N/R	6	7	5	7	N/R
0.312"/ 7.9mm	6	N/R	5	6	4	6	N/R
0.375"/ 9.5mm	6	7	4	5	4	5	N/R
0.438"/ 11.1mm	6	6	4	5	3	4	N/R
0.500"/ 12.7mm	5	6	3	4	N/R	N/R	N/R
0.625"/ 15.9mm	4	5	3	3	N/R	N/R	N/R
0.750"/ 19.0mm	3	4	3	3	N/R	N/R	N/R
0.875"/ 22.2mm	3	4	N/R	3	N/R	N/R	N/R
1.000"/ 25.4mm	3	3	N/R	N/R	N/R	N/R	N/R

g014736

g014736

Figure 37

4. To set the reel speed, rotate the knob (Figure 38) until the indicator arrows are in line with the number designating desired setting.

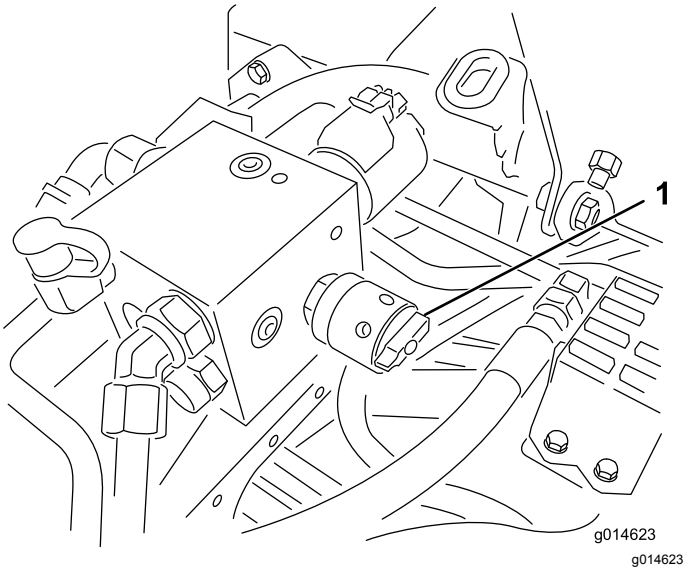

g014623

Figure 38

1. Reel speed control

Note: You can increase or decrease the reel speed to compensate for turf conditions.

Mowing with the Machine

Note: Before mowing greens with the machine, find a clear area and practice starting and stopping, raising and lowering the cutting units, turning, etc. This training period will be beneficial to the operator in gaining confidence in the performance of the machine.

Note: Before mowing, inspect the green for debris, remove the flag from the cup, and determine the best direction to mow. Base the direction to mow on the previous mowing direction. Always mow in an alternate pattern from the previous mowing so that the grass blades will be less apt to lay down and therefore be difficult to trap between the reel blades and bedknife.

1. Approach the green with the shift selector in the No. 1 position. Start on one edge of the green so that the ribbon procedure of cutting may be used.

   Note: This holds compaction to a minimum and leaves a neat, attractive pattern on the greens.

2. Actuate the mow pedal as the front edge of the grass baskets cross the outer edge of the green.

   Note: This procedure drops the cutting units to the turf and starts the reels.

   Important: **Familiarize yourself with the fact that the No. 1 cutting unit reel is delayed and therefore, you should practice to try to gain the required timing necessary to minimize the cleanup mowing operation.**

3. Overlap a minimal amount with the previous cut on return passes.

   Note: To assist in maintaining a straight line across the green and keep the machine an equal distance from the edge of the previous cut, establish an imaginary sight line approximately 1.8 to 3 m (6 to 10 ft) ahead of the machine to the edge of the uncut portion of the green (Figure 39).

   Some find it useful to include the outer edge of the steering wheel as part of the sight line; i.e. keep the steering wheel edge aligned with a point that is always kept the same distance away from the front of the machine (Figure 39).

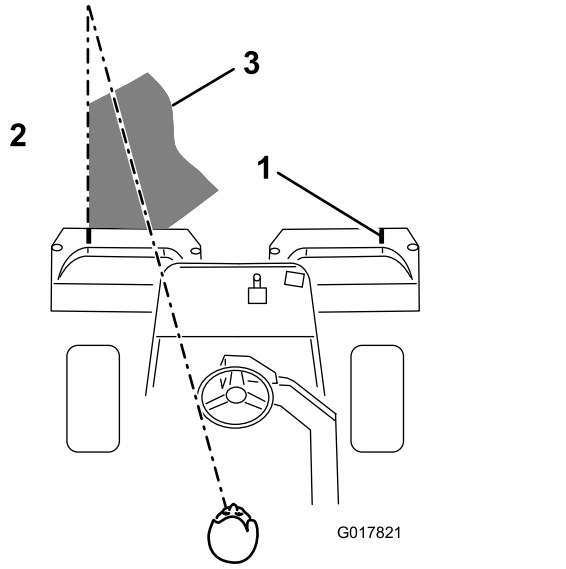

g017821

Figure 39

1. Alignment marker
2. Cut grass on left
3. Keep focal spot 1.8-3 m (6-10 ft) ahead of the machine.

4. As the front of the baskets cross the edge of the green, depress the lift pedal.

   Note: This will stop the reels and lift the cutting units. Timing of this procedure is important, so the mowers do not cut into the fringe area. However, as much of the green as possible should be cut to minimize the amount of grass left to mow around the outer periphery

5. Cut down on operating time and ease lineup for the next pass by momentarily turning the machine in the opposite direction, then turning in the direction of the uncut portion; i.e., if intending to turn right, first swing slightly left, then right.

   Note: This will assist in getting the machine more quickly aligned for the next pass.

   Follow the same procedure for turning in the opposite direction. It is a good practice to try to make as short of a turn as possible. However, turn in a wider arc during warmer weather to minimize the possibility of bruising the turf.

   Important: **The machine should never be stopped on a green with the cutting unit reels operating as damage to the turf may result. Stopping on a wet green with the machine may leave marks or indentations from the wheels.**

6. Finish cutting the green by mowing the outer periphery and replace the flags.

   Note: Be sure to change the direction of cutting from the previous mowing. Always keep weather and turf conditions in mind and be sure to change the direction of mowing from the previous cutting.

   Note: At the end of the periphery cut, momentarily pull back on the raise/lower mow lever to shut the reels off without raising them. Continue moving forward until the reel stops rotating, then, drive off the green and raise the reels (This will help prevent dribbling grass onto the green while raising the reels).

7. Empty the grass baskets of all clippings before transporting to the next green.

   Note: Heavy wet clippings place an undue strain on the baskets and will add unnecessary weight to the machine, thereby increasing the load on the engine, hydraulic system, brakes, etc.

Transporting the Machine

Make sure the cutting units are in the full up position. Move the functional control lever to the transport position. Use the brakes to slow the machine while going down steep hills to avoid loss of control. Always approach rough areas at a reduced speed and cross severe undulations carefully. Familiarize yourself with the width of the machine. Do not attempt to pass between objects that are close together so that costly damage and down time can be prevented.

Cleaning and Inspecting the Machine

At the completion of the mowing operation, thoroughly wash the machine with a garden hose without a nozzle so excessive water pressure will not cause contamination and damage to seals and bearings. **Never wash a warm engine or electrical connections with water.**

After cleaning, it is recommended the machine be inspected for possible hydraulic fluid leaks

and damage or wear to hydraulic and mechanical components. The cutting units should be checked for sharpness. Also, lubricate the traction pedal and brake shaft assembly with SAE 30W oil or spray lubricant to deter corrosion and help keep the machine performing satisfactorily during the next mowing operation.

Towing the Machine

In case of an emergency the machine can be towed for a short distance (less than 0.4 km (1/4 mile)). However, Toro does not recommend this as standard procedure.

Important: **Do not tow the machine faster than 3-5 km/h (2-3 mph) because the drive system may be damaged. If the machine must be moved a considerable distance, transport it on a truck or trailer.**

1. Locate the bypass valve on the pump and rotate it so that the slot is vertical (Figure 40).

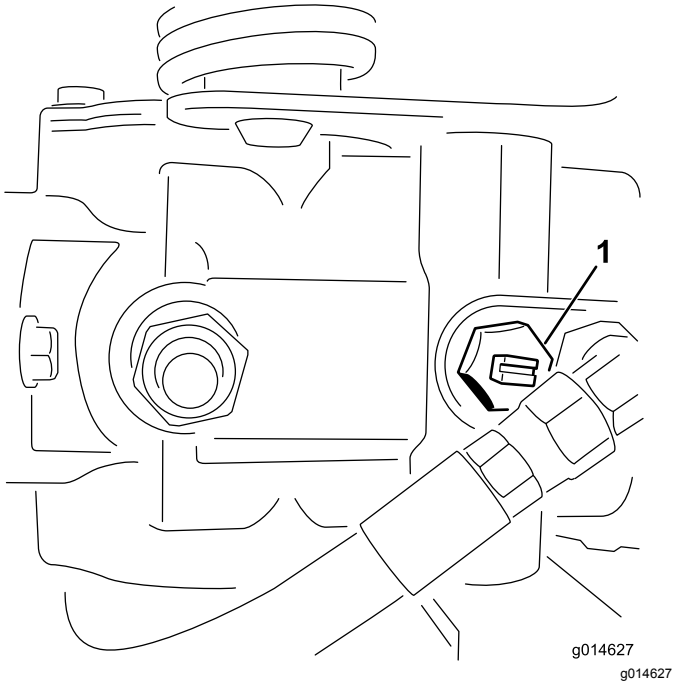

Figure 40

1. Bypass valve—slot shown in closed (horizontal) position

2. Before starting the engine, close the bypass valve by rotating it so that the slot is horizontal (Figure 40). Do not start the engine when the valve is open.

Maintenance

Note: Looking for an *Electrical Schematic* or *Hydraulic Schematic* for your machine? Download a free copy of the schematic by visiting www.Toro.com and searching for your machine from the Manuals link on the home page.

Note: Determine the left and right sides of the machine from the normal operating position.

Recommended Maintenance Schedule(s)

Maintenance Service Interval	Maintenance Procedure
After the first hour	• Check the torque of the wheel nuts.
After the first 8 hours	• Check the torque of the wheel nuts. • Check the tension on the alternator belt.
After the first 50 hours	• Change the engine oil and filter. • Change the hydraulic oil filter. • Check the engine rpm (at idle and full throttle).
Before each use or daily	• Check the engine oil. • Clean debris off of the radiator screen and radiator. Clean hourly if conditions are extremely dusty and dirty. • Check the hydraulic fluid level. • Drain water from the fuel filter. • Check the reel-to-bedknife contact. • Check the hydraulic lines and hoses.
Every 25 hours	• Check the battery electrolyte level. (If the machine is in storage, check every 30 days.)
Every 50 hours	• Check the battery cable connections.
Every 150 hours	• Change the engine oil and filter.
Every 200 hours	• Check the torque of the wheel nuts. • Service the air cleaner filter (more frequently when operating conditions are dusty or dirty).
Every 800 hours	• Replace the fuel filter. • Change the hydraulic oil, filter, and tank breather. • Check the engine rpm (at idle and full throttle). • Check the valve clearance.
Every 2 years	• Check the fuel lines and connections. • Replace moving hoses. • Drain and flush the cooling system.

Important: **Refer to your engine operator's manual for additional maintenance procedures.**

⚠ CAUTION

If you leave the key in the ignition switch, someone could accidently start the engine and seriously injure you or other bystanders.

Remove the key from the ignition.

Daily Maintenance Checklist

Duplicate this page for routine use.

Maintenance Check Item	For the week of:						
	Mon.	Tues.	Wed.	Thurs.	Fri.	Sat.	Sun.
Check the safety interlock operation.							
Check the instrument operation							
Check the brake operation.							
Check the fuel filter/water separator.							
Check the fuel level.							
Check the engine oil level.							
Clean the screen and radiator.							
Inspect the air filter.							
Check any unusual engine noises.							
Check the reel-to-bedknife adjustment.							
Check the hydraulic hoses for damage.							
Check for fluid leaks.							
Check the tire pressure.							
Check the height-of-cut adjustment.							
Lubricate the traction and brake linkage.							
Touch-up damaged paint.							

Notation for Areas of Concern

Inspection performed by:		
Item	**Date**	**Information**

Engine Maintenance

Servicing the Air Cleaner

Service Interval: Every 200 hours

- Check the air cleaner body for damage which could cause an air leak. Replace if damaged. Check the whole intake system for leaks, damage or loose hose clamps.
- Service the air cleaner filter before 200 hours if the engine performance suffers due to extremely dusty, dirty conditions. Changing the air filter before it is necessary only increases the chance of dirt entering the engine when the filter is removed.
- Be sure the cover is seated correctly and seals with the air cleaner body.

1. Release the latches securing the air cleaner cover to the air cleaner body (Figure 41).

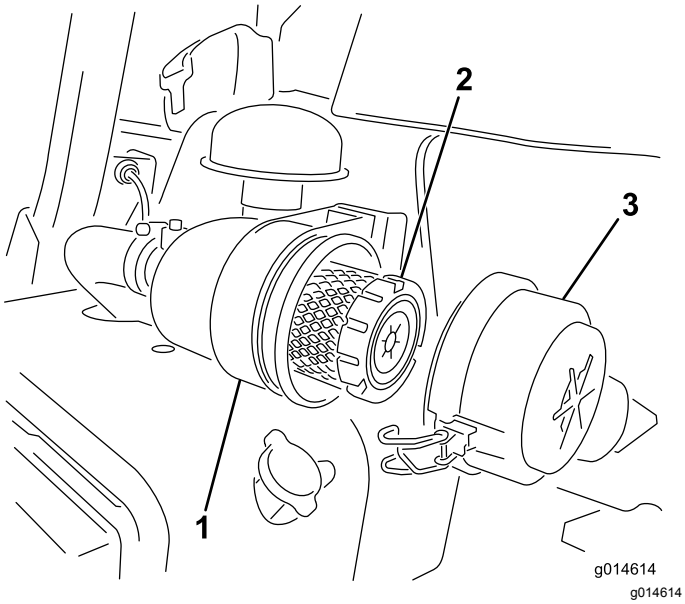

Figure 41

1. Air cleaner body
2. Air filter
3. Air cleaner cover

2. Remove the cover from the air cleaner body. Before removing the filter, use low pressure air (40 psi, clean and dry) to help remove large accumulations of debris packed between outside of primary filter and the canister. Avoid using high pressure air which could force dirt through the filter into the intake tract. This cleaning process prevents debris from migrating into the intake when the primary filter is removed.
3. Remove and replace the primary filter. Cleaning of the used element is not recommended due to the possibility of damage to the filter media. Inspect the new filter for shipping damage, checking the sealing end of the filter and the body. Do not use a damaged element. Insert the new filter by applying pressure to the outer rim of the element to seat it in the canister. Do not apply pressure to the flexible center of the filter.
4. Clean the dirt ejection port located in the removable cover. Remove the rubber outlet valve from the cover, clean the cavity and replace the outlet valve.
5. Install the cover orienting the rubber outlet valve in a downward position—between approximately 5:00 to 7:00 when viewed from the end.
6. Secure the latches (Figure 41).

Changing the Engine Oil and Filter

Service Interval: After the first 50 hours

Every 150 hours

1. Remove the drain plug and let oil flow into a drain pan. When the oil stops, install the drain plug (Figure 42).

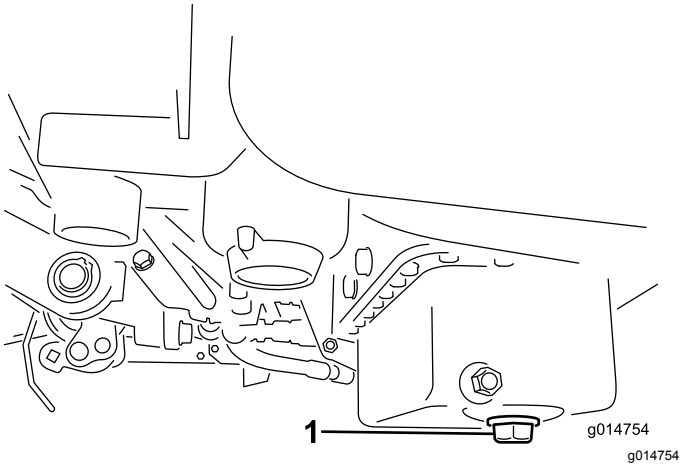

Figure 42

1. Drain plug

2. Remove the oil filter (Figure 43). Apply a light coat of clean oil to the new filter gasket.

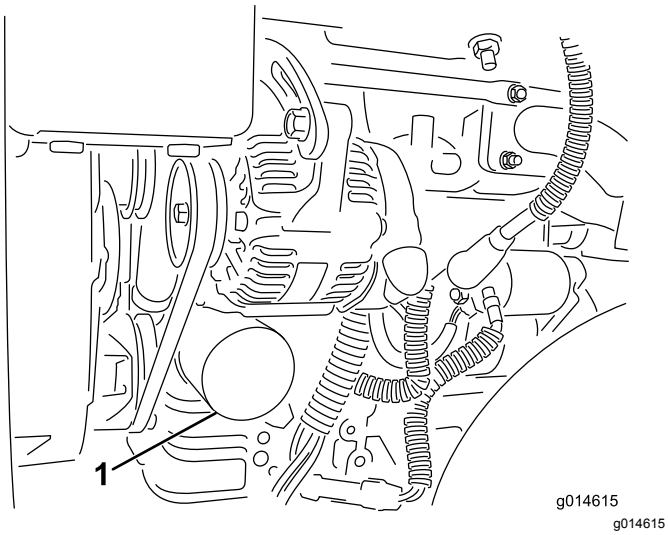

Figure 43

1. Oil filter

3. Screw the filter on by hand until the gasket contacts the filter adapter, then tighten 1/2 to 3/4 turn further. **Do not overtighten**.
4. Add oil to the crankcase; refer to Checking the Engine Oil (page 22).
5. Dispose of the used oil properly.

Fuel System Maintenance

Servicing the Fuel Filter/Water Separator

Service Interval: Every 800 hours

1. Close the fuel shut off valve (Figure 44) below the fuel tank.

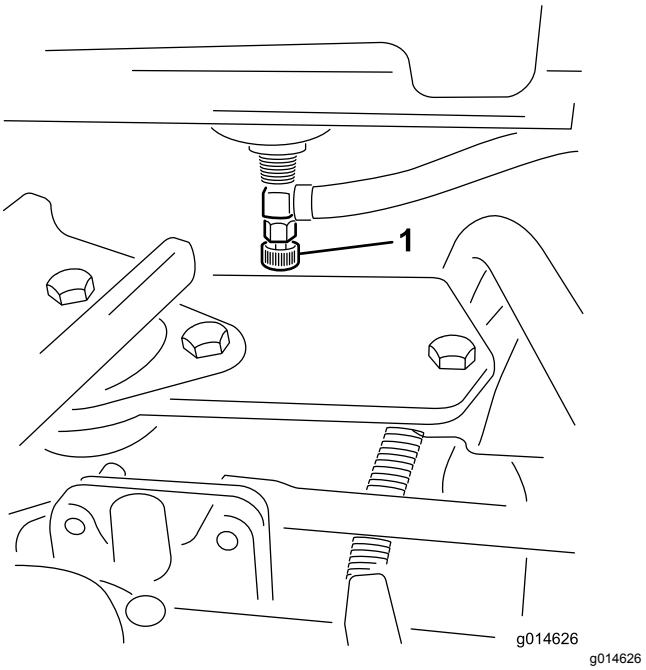

Figure 44

1. Fuel shut-off valve

2. Clean the area where the filter canister mounts (Figure 45).
3. Place a drain pan under the fuel filter.
4. Open the filter drain plug (Figure 45).

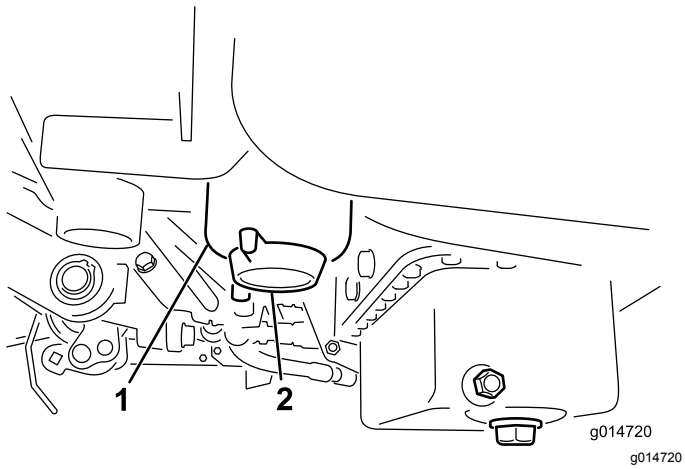

Figure 45

1. Fuel filter /water separator canister
2. Filter drain plug

5. Unscrew the filter canister and dispose of it according to local regulations.
6. Screw the filter on by hand until the gasket contacts the filter adapter, then tighten 1/2 to 3/4 turn further.
7. Make sure the filter drain plug is closed. Open the fuel shut off valve.

Inspecting the Fuel Lines and Connections

Service Interval: Every 2 years

Inspect the fuel lines for deterioration, damage, or loose connections.

Electrical System Maintenance

Servicing the Battery

⚠ WARNING

CALIFORNIA
Proposition 65 Warning

Battery posts, terminals, and related accessories contain lead and lead compounds, chemicals known to the State of California to cause cancer and reproductive harm. Wash hands after handling.

Voltage: 12 v, 530 Cold Cranking Amps

The battery electrolyte level must be properly maintained and the top of the battery kept clean. If the machine is stored in a location where temperatures are extremely high, the battery will run down more rapidly than if the machine is stored in a location where temperatures are cool.

Maintain the cell level with distilled or demineralized water. Do not fill the cells above the bottom of the split ring inside each cell.

⚠ DANGER

Battery electrolyte contains sulfuric acid which is a deadly poison and causes severe burns.

- **Do not drink electrolyte and avoid contact with skin, eyes or clothing. Wear safety glasses to shield your eyes and rubber gloves to protect your hands.**
- **Fill the battery where clean water is always available for flushing the skin.**

Keep the top of the battery clean by washing it periodically with a brush dipped in ammonia or bicarbonate of soda solution. Flush the top surface with water after cleaning it. Do not remove the fill caps while cleaning the battery.

The battery cables must be tight on the terminals to provide good electrical contact.

⚠ WARNING

Battery terminals or metal tools could short against metal tractor components causing sparks. Sparks can cause the battery gasses to explode, resulting in personal injury.

- **When removing or installing the battery, do not allow the battery terminals to touch any metal parts of the tractor.**
- **Do not allow metal tools to short between the battery terminals and metal parts of the tractor.**

⚠ WARNING

Incorrect battery cable routing could damage the tractor and cables causing sparks. Sparks can cause the battery gasses to explode, resulting in personal injury.

If corrosion occurs at the terminals, disconnect the cables, negative (-) cable first, and scrape the clamps and terminals separately. Reconnect the cables, positive (+) cable first, and coat the terminals with petroleum jelly.

- **Always disconnect the negative (black) battery cable before disconnecting the positive (red) cable.**
- **Always connect the positive (red) battery cable before connecting the negative (black) cable.**

Storing the Battery

If the machine will be stored more than 30 days, remove the battery and charge it fully. Either store it on the shelf on the machine. Leave the cables disconnected if it is stored on the machine. Store the battery in a cool atmosphere to avoid quick deterioration of the charge in the battery. To prevent the battery from freezing, make sure it is fully charged. The specific gravity of a fully charged battery is 1.265–1.299.

Locating the Fuses

The fuses in the machine's electrical system are located under the seat (Figure 46).

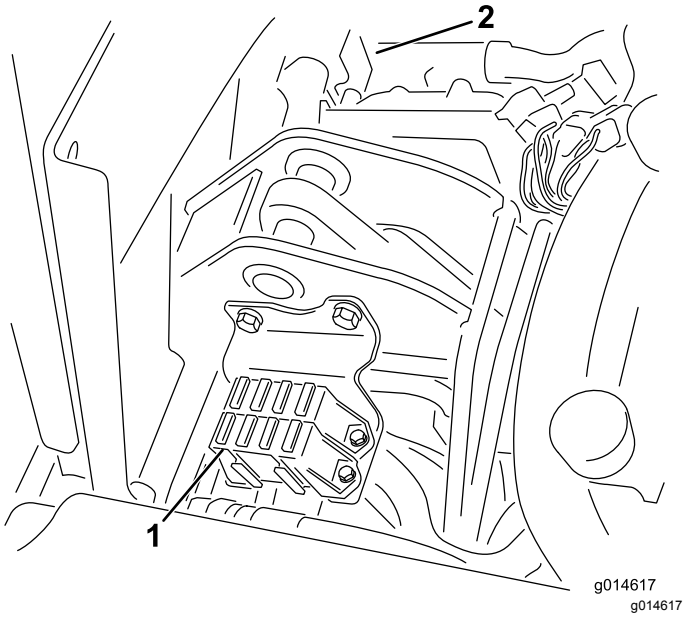

Figure 46

1. Fuses
2. 50 A fuse for radiator fan (behind parts illustrated)

Fuse Layout	
	Lift Reel E-Reel Enable Over Temp 7.5 A
Lights Leak Detector 15 A	Reel Engage Lift/Lower Fan 7.5 A
Starter 15 A	Start/Run Diag. Lights Glow 7.5 A
Run 10 A	ECM Logic Power 2 A

Drive System Maintenance

Adjusting the Transmission for Neutral

If the machine creeps when the traction control pedal is in the neutral position, the neutral return mechanism must be adjusted.

1. Block up under the frame so that one of the front wheels is off of the floor.

   Note: Note: If machine is equipped with a 3 wheel drive kit, also raise and block rear wheel.

2. Start the engine, move the throttle to Slow, and check the front wheel that is off of the floor; it must not be rotating.
3. If the wheel is rotating, stop the engine and proceed as follows:

   A. Loosen the nut securing the eccentric to the top of the hydrostat (Figure 47).

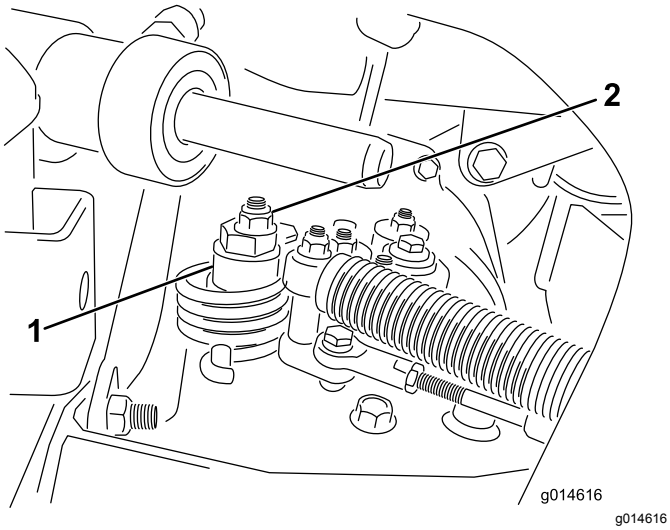

Figure 47

1. Eccentric
2. Locknut

   B. Move the functional control lever to Neutral and the throttle to Slow. Start the engine.

   C. Rotate the eccentric until creep does not occur in either direction. When the wheel stops rotating, tighten the nut locking the eccentric and the adjustment (Figure 47). Verify the adjustment with the throttle in the Slow and Fast position.

   Note: If the wheel still turns when the eccentric is at the maximum adjustment, contact your Authorized Service Distributor or refer to the *Service Manual* for further adjustment.

Adjusting the Transport Speed

The traction pedal is adjusted for maximum transport speed at the factory, but an adjustment may be required if the pedal reaches full stroke before it contacts the pedal stop, or if a decrease in transport speed is desired.

Press down on the traction pedal. If the pedal contacts the stop (Figure 48) before tension is felt on the cable, an adjustment is required:

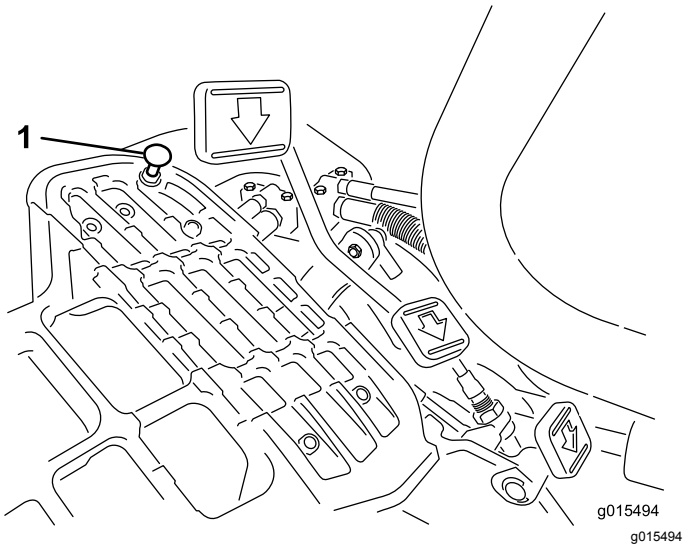

Figure 48

1. Pedal stop

1. Loosen flangehead locknuts securing the pedal stop to the floor plate (Figure 48).
2. Adjust the pedal stop so it contacts the pedal rod and tighten the nuts.

Adjusting the Mowing Speed

The machine is adjusted at the factory, but speed may be varied if desired.

1. Loosen the jam nut on the trunnion bolt (Figure 49).
2. Loosen the nut securing the lock and mow brackets on the pedal pivot.

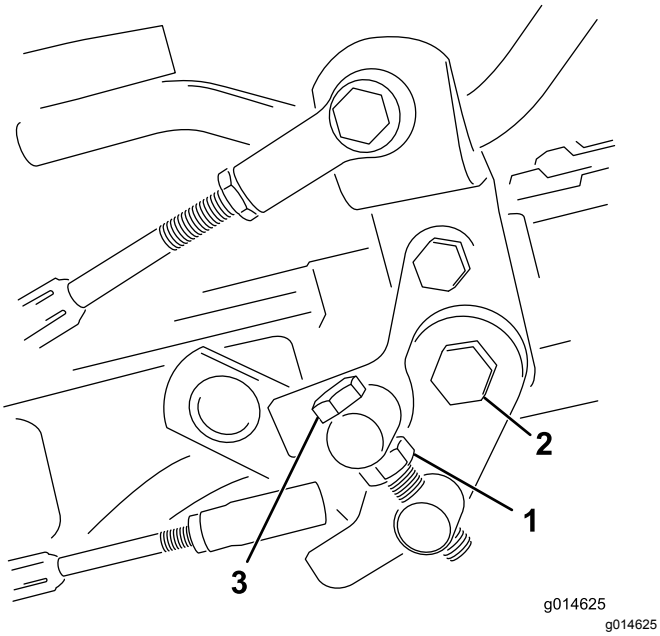

Figure 49

1. Jam nut
2. Nut
3. Trunnion bolt

3. Rotate the trunnion bolt clockwise to reduce the mowing speed and counterclockwise to increase the mowing speed.
4. Tighten the jam nut on the trunnion bolt and the nut on the pedal pivot to lock the adjustment (Figure 49). Check the adjustment and adjust as required.

Cooling System Maintenance

Cleaning the Radiator Screen

To prevent the system from overheating, the radiator screen and radiator must be kept clean. Check and clean the screen and radiator daily or, if necessary, hourly. Clean these components more frequently in dusty, dirty conditions.

1. Remove the radiator screen (Figure 50).

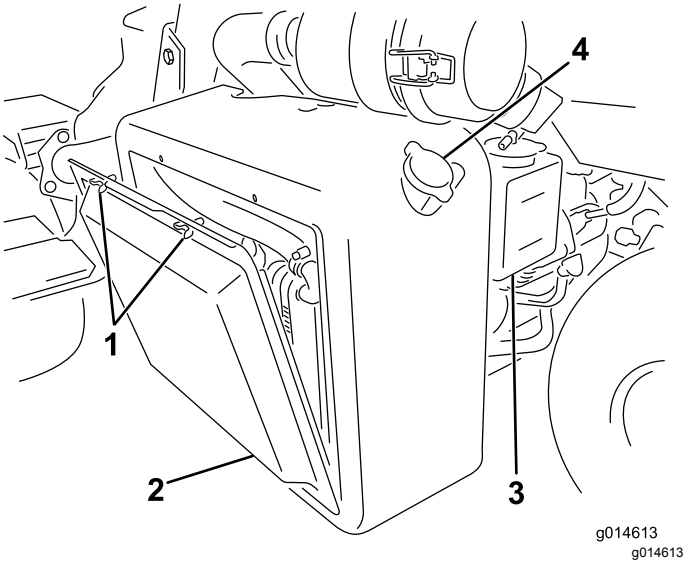

Figure 50

1. Wing bolts
2. Radiator screen
3. Overflow tank
4. Radiator cap

2. Working from the fan side of the radiator, blow out the radiator with compressed air.
3. Clean the screen and install it.

Brake Maintenance

Adjusting the Brakes

If the brake fails to hold the machine while parked, you can adjust the brakes using the bulkhead fitting near the brake drum; contact your Authorized Service Distributor or refer to the *Service Manual* for more information.

Note: Burnish the brakes annually; refer to the Break-In Period section.

Belt Maintenance

Adjusting the Alternator Belt

Service Interval: After the first 8 hours

Make sure the belt is properly tensioned to ensure proper operation of the machine and prevent unnecessary wear.

1. Stop the engine, set the parking brake, and remove the ignition key.
2. Apply moderate thumb pressure to the belt between the pulleys (10 kg or 22 lb). The belt should deflect 7 to 9 mm (0.28 to 0.35 inches). If not, complete the following procedure to adjust the belt tension:

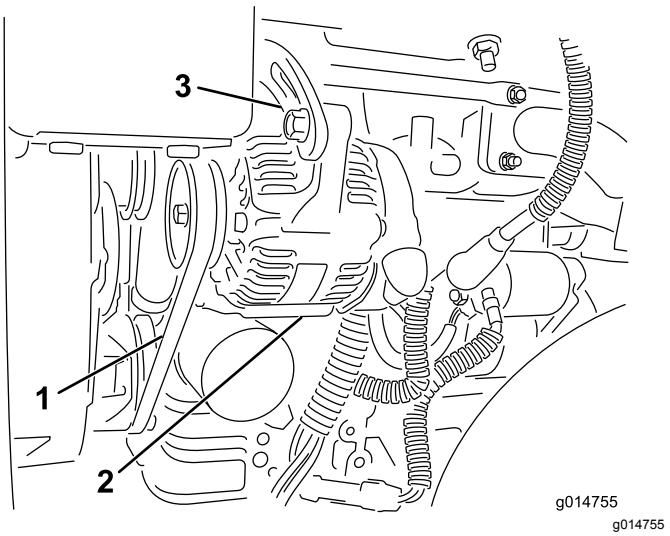

Figure 51

1. Alternator belt—apply pressure here
2. Alternator
3. Adjusting strap

A. Loosen the bolts securing the alternator to the engine and adjusting strap.

B. Inspect the belt for wear or damage and replace if it is worn.

C. Using a lever placed between the alternator and the engine block, pull the alternator out to obtain the correct belt tension and tighten the bolts.

Hydraulic System Maintenance

Changing the Hydraulic Oil and Filter

Service Interval: After the first 50 hours

Every 800 hours

If the oil becomes contaminated, contact your local Toro distributor because the system must be flushed. Contaminated oil looks milky or black when compared to clean oil.

1. Clean the area around the filter mounting area (Figure 52). Place a drain pan under the filter and remove the filter.

   Note: If the oil is not going to be drained, disconnect and plug the hydraulic line going to the filter.

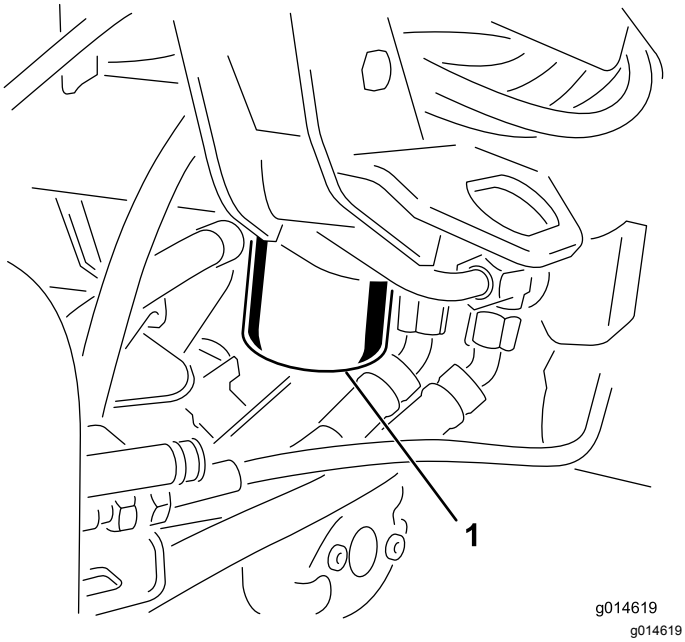

Figure 52

1. Hydraulic oil filter

2. Fill the replacement filter with the appropriate hydraulic fluid, lubricate the sealing gasket, and hand turn it until the gasket contacts the filter head. Then tighten 3/4 turn further. The filter should now be sealed.
3. Fill the hydraulic reservoir with hydraulic oil; refer to Checking the Hydraulic Fluid Level (page 25).
4. Start the machine and run it at idle for 3 to 5 minutes to circulate the fluid and remove any air trapped in the system.
5. Stop the machine, recheck the fluid level and replenish as required.
6. Dispose of the oil and filter properly.

Checking the Hydraulic Lines and Hoses

⚠ WARNING

Hydraulic fluid escaping under pressure can penetrate skin and cause injury.

- **Make sure all hydraulic fluid hoses and lines are in good condition and all hydraulic connections and fittings are tight before applying pressure to the hydraulic system.**
- **Keep your body and hands away from pin hole leaks or nozzles that eject high pressure hydraulic fluid.**
- **Use cardboard or paper to find hydraulic leaks.**
- **Safely relieve all pressure in the hydraulic system before performing any work on the hydraulic system.**
- **Get immediate medical help if fluid is injected into skin.**

Check the hydraulic lines and hoses daily for leaks, kinked lines, loose mounting supports, wear, loose fittings, weather deterioration, and chemical deterioration. Make all necessary repairs before operating.

Cutting Unit Maintenance

Backlapping the Reels

⚠ WARNING

Contact with the reels or other moving parts can result in personal injury.

- **Keep fingers, hands, and clothing away from the reels or other moving parts.**
- **Never attempt to turn the reels by hand or foot while the engine is running.**

1. Position the machine on a level surface, lower the cutting units, stop the engine, engage the parking brake.
2. Remove the plastic cover to the left side of the seat.
3. Make initial reel to bedknife adjustments appropriate for backlapping on all cutting units which are to be backlapped; refer to the *Cutting Unit Operator's Manual.*

⚠ DANGER

Changing the engine speed while backlapping may cause the reels to stall.

- **Never change the engine speed while backlapping.**
- **Only backlap at idle engine speed.**

4. Start the engine and run at low idle speed.
5. Rotate the backlap lever to the Reverse (R) position (Figure 53).

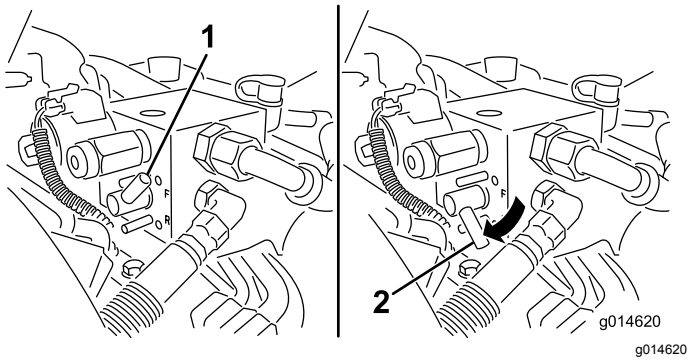

Figure 53

1. Backlap lever—forward position
2. Backlap lever—reverse position

6. Rotate the reel speed control to setting 1 (Figure 54).

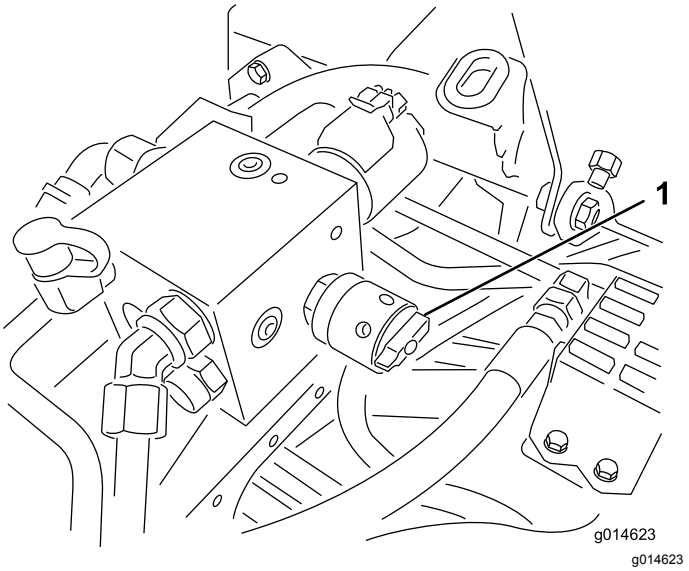

Figure 54

1. Reel speed control

7. With the functional control lever in the neutral position, move the Raise/Lower Mow control forward to start the backlapping operation on the designated reels.
8. Apply lapping compound with a long handle brush. Never use a short handled brush.
9. If the reels stall or become erratic while backlapping, select a higher reel speed setting until the speed stabilizes, then return the reel speed to setting 1 or to your desired speed.
10. To make an adjustment to the cutting units while backlapping, turn the reels off by moving the Raise/Lower Mow control rearward and stop the engine. After completing adjustments, repeat steps 4 through 8.
11. Repeat the procedure for all cutting units you want to backlap.
12. When finished, return the backlap levers to the Forward (F) position, replace the cover, and wash all lapping compound off of the cutting units. Adjust cutting unit reel to bedknife as needed. Move the cutting unit reel speed control to the desired mowing position.

Important: **If the backlap lever is not returned to the Forward (F) position after backlapping, the cutting units will not raise or function properly.**

Diagnostics System

Diagnosing the Service Indicator Light

The service indicator light illuminates in the event of a fault in the machine. When this light is on, you can access the computer codes to diagnose the problem by entering diagnostic mode. In diagnostic mode, the service indicator light will flash a number of times giving you the error code that you or your distributor can use to identify the problem.

Note: The engine cannot be started in diagnostic mode.

Entering Diagnostic Mode

1. Stop the machine, set the parking brake, and turn the ignition key to Off.
2. Move the Functional Control Lever to the Transport position.
3. Ensure that the Backlap lever is set to Forward (F).
4. Get off of the seat.
5. Hold the Raise/Lower Mow Control in the Raised position.
6. Turn the ignition switch to the Run position.
7. Count the codes as they begin to flash (you may release the Raise/Lower Mow Control once they begin flashing).

When finished, turn the key to the Off position to exit diagnostic mode.

Determining the Error Code

The system will display the last 3 faults that occurred in the last 40 hours. It displays the faults through a series of blinking lights, as follows:

- If there are no faults, the light with blink steadily at a medium rate without pauses (1 Hz).
- If there is a fault, it will first blink the tens place, followed by a pause, followed by the ones place. For the following examples, a # represents a blink. Examples:
  - If the code is 15, the blink pattern will be #_#####
  - If the code is 42, the blink pattern will be ####_##
  - If the code is 123, the blink pattern will be ##########_###
- If there are more than one fault, the tens place of the next fault will begin after a pause after the ones place of the first fault.

Note: The system stores only the three most recent fault codes.

For a list of error codes, refer to your Authorized Distributor or the *Service Manual*.

Storage

If you wish to store the machine for a long period of time, the following steps should be performed prior to storage:

1. Remove accumulations of dirt and old grass clippings. Sharpen the reels and bedknives, if necessary; refer to the *Cutting Unit Operator's Manual*. Use a rust preventive on bedknives and reel blades. Grease and oil all lubrication points.
2. Block up the wheels to remove any weight on the tires.
3. Drain and replace the hydraulic fluid and filter and inspect the hydraulic lines and fittings. Replace, if necessary; refer to Changing the Hydraulic Oil and Filter (page 43) and Checking the Hydraulic Lines and Hoses (page 43).
4. All fuel should be removed from the fuel tank. Run the engine until it stops from lack of fuel. Replace the fuel filter; refer to Servicing the Fuel Filter/Water Separator (page 37).
5. While the engine is still warm, drain the oil from the crankcase. Refill it with fresh oil; refer to Changing the Engine Oil and Filter (page 36).
6. Clean dirt and chaff from the cylinder, cylinder head fins, and blower housing.
7. Remove the battery and charge it fully. Either store it on the shelf or on the machine. Leave the cables disconnected if it is stored on the machine. Store the battery in a cool atmosphere to avoid quick deterioration of the charge in the battery.
8. If possible, store the machine in a warm, dry location.

Notes:

The Toro Total Coverage Guarantee

A Limited Warranty

Conditions and Products Covered

The Toro Company and its affiliate, Toro Warranty Company, pursuant to an agreement between them, jointly warrant your Toro Commercial product ("Product") to be free from defects in materials or workmanship for two years or 1500 operational hours*, whichever occurs first. This warranty is applicable to all products with the exception of Aerators (refer to separate warranty statements for these products). Where a warrantable condition exists, we will repair the Product at no cost to you including diagnostics, labor, parts, and transportation. This warranty begins on the date the Product is delivered to the original retail purchaser.
* Product equipped with an hour meter.

Instructions for Obtaining Warranty Service

You are responsible for notifying the Commercial Products Distributor or Authorized Commercial Products Dealer from whom you purchased the Product as soon as you believe a warrantable condition exists. If you need help locating a Commercial Products Distributor or Authorized Dealer, or if you have questions regarding your warranty rights or responsibilities, you may contact us at:

Toro Commercial Products Service Department
Toro Warranty Company
8111 Lyndale Avenue South
Bloomington, MN 55420-1196

952–888–8801 or 800–952–2740
E-mail: commercial.warranty@toro.com

Owner Responsibilities

As the Product owner, you are responsible for required maintenance and adjustments stated in your *Operator's Manual*. Failure to perform required maintenance and adjustments can be grounds for disallowing a warranty claim.

Items and Conditions Not Covered

Not all product failures or malfunctions that occur during the warranty period are defects in materials or workmanship. This warranty does not cover the following:

- Product failures which result from the use of non-Toro replacement parts, or from installation and use of add-on, or modified non-Toro branded accessories and products. A separate warranty may be provided by the manufacturer of these items.
- Product failures which result from failure to perform recommended maintenance and/or adjustments. Failure to properly maintain your Toro product per the Recommended Maintenance listed in the *Operator's Manual* can result in claims for warranty being denied.
- Product failures which result from operating the Product in an abusive, negligent, or reckless manner.
- Parts subject to consumption through use unless found to be defective. Examples of parts which are consumed, or used up, during normal Product operation include, but are not limited to, brake pads and linings, clutch linings, blades, reels, rollers and bearings (sealed or greasable), bed knives, spark plugs, castor wheels and bearings, tires, filters, belts, and certain sprayer components such as diaphragms, nozzles, and check valves, etc.
- Failures caused by outside influence. Conditions considered to be outside influence include, but are not limited to, weather, storage practices, contamination, use of unapproved fuels, coolants, lubricants, additives, fertilizers, water, or chemicals, etc.
- Failure or performance issues due to the use of fuels (e.g. gasoline, diesel, or biodiesel) that do not conform to their respective industry standards.
- Normal noise, vibration, wear and tear, and deterioration.
- Normal "wear and tear" includes, but is not limited to, damage to seats due to wear or abrasion, worn painted surfaces, scratched decals or windows, etc.

Parts

Parts scheduled for replacement as required maintenance are warranted for the period of time up to the scheduled replacement time for that part. Parts replaced under this warranty are covered for the duration of the original product warranty and become the property of Toro. Toro will make the final decision whether to repair any existing part or assembly or replace it. Toro may use remanufactured parts for warranty repairs.

Deep Cycle and Lithium-Ion Battery Warranty:

Deep cycle and Lithium-Ion batteries have a specified total number of kilowatt-hours they can deliver during their lifetime. Operating, recharging, and maintenance techniques can extend or reduce total battery life. As the batteries in this product are consumed, the amount of useful work between charging intervals will slowly decrease until the battery is completely worn out. Replacement of worn out batteries, due to normal consumption, is the responsibility of the product owner. Battery replacement may be required during the normal product warranty period at owner's expense. Note: (Lithium-Ion battery only): A Lithium-Ion battery has a part only prorated warranty beginning year 3 through year 5 based on the time in service and kilowatt hours used. Refer to the *Operator's Manual* for additional information.

Maintenance is at Owner's Expense

Engine tune-up, lubrication, cleaning and polishing, replacement of filters, coolant, and completing recommended maintenance are some of the normal services Toro products require that are at the owner's expense.

General Conditions

Repair by an Authorized Toro Distributor or Dealer is your sole remedy under this warranty.

Neither The Toro Company nor Toro Warranty Company is liable for indirect, incidental or consequential damages in connection with the use of the Toro Products covered by this warranty, including any cost or expense of providing substitute equipment or service during reasonable periods of malfunction or non-use pending completion of repairs under this warranty. Except for the Emissions warranty referenced below, if applicable, there is no other express warranty. All implied warranties of merchantability and fitness for use are limited to the duration of this express warranty.

Some states do not allow exclusions of incidental or consequential damages, or limitations on how long an implied warranty lasts, so the above exclusions and limitations may not apply to you. This warranty gives you specific legal rights, and you may also have other rights which vary from state to state.

Note regarding engine warranty:

The Emissions Control System on your Product may be covered by a separate warranty meeting requirements established by the U.S. Environmental Protection Agency (EPA) and/or the California Air Resources Board (CARB). The hour limitations set forth above do not apply to the Emissions Control System Warranty. Refer to the Engine Emission Control Warranty Statement supplied with your product or contained in the engine manufacturer's documentation for details

Countries Other than the United States or Canada

Customers who have purchased Toro products exported from the United States or Canada should contact their Toro Distributor (Dealer) to obtain guarantee policies for your country, province, or state. If for any reason you are dissatisfied with your Distributor's service or have difficulty obtaining guarantee information, contact the Toro importer.