Form No. 3418-442 Rev A

TORO®

Count on it.

Parts Catalog

Flex-Force Power System™ 60V MAX 22in Recycler®

Lawn Mower

Model No. 20363—Serial No. 400000000 and Up

Model No. 20363T—Serial No. 400000000 and Up

Register at www.Toro.com.
Original Instructions (EN)

3418-442 A

Ordering Replacement Parts

To order replacement parts, please supply the part number, the quantity, and the description of each part desired.

Understanding Reference Numbers

Each identified part in an illustration has a reference number. The reference number for a part also appears in the parts list, along with other information about the part.

This catalog uses two special reference number formats, one to indicate parts in a service assembly and another to indicate the quantity of a given part in an illustration.

Service Assembly Reference Numbers

Parts in service assemblies have reference numbers in the form a:b. The a represents the reference number of the entire service assembly and the b represents a sequential number unique to each part within the service assembly.

For example, a wheel assembly might be identified by reference number 6, the tire by 6:1, the valve by 6:2, and the wheel by 6:3. When you order the assembly identified by reference number 6, you receive all parts identified by reference numbers 6:1,6:2, and 6:3. However, you may also order any part individually. Reference numbers of this type appear in illustration and in parts lists.

Reference Numbers Indicating Quantity

In an illustration, if a reference number indicates more than one part, the reference number has the form nX y. The n represents the quantity of the part, the X is the multiplication symbol, and the y represents the reference number.

For example, in an illustration, the reference number 2X 37 means that two of the parts identified by reference number 37 are indicated.

Contents

Housing Assembly 4
Rear Bag Assembly 6
Motor and Blade Assembly 8
Motor Module Assembly No. 139-1680 Lower Shroud Assembly 10
Motor Module Assembly No. 139-1680 Upper Shroud Assembly 12
Front Wheel and Height-of-Cut Assembly 14
Rear Wheel and Height-of-Cut Assembly 16
Handle Assembly 18
Starter Switch Assembly 20
Attachments and Accessories 22

© 2019—The Toro® Company
8111 Lyndale Avenue South
Bloomington, MN 55420

Contact us at www.Toro.com.
Printed in the USA.
All Rights Reserved

Housing Assembly

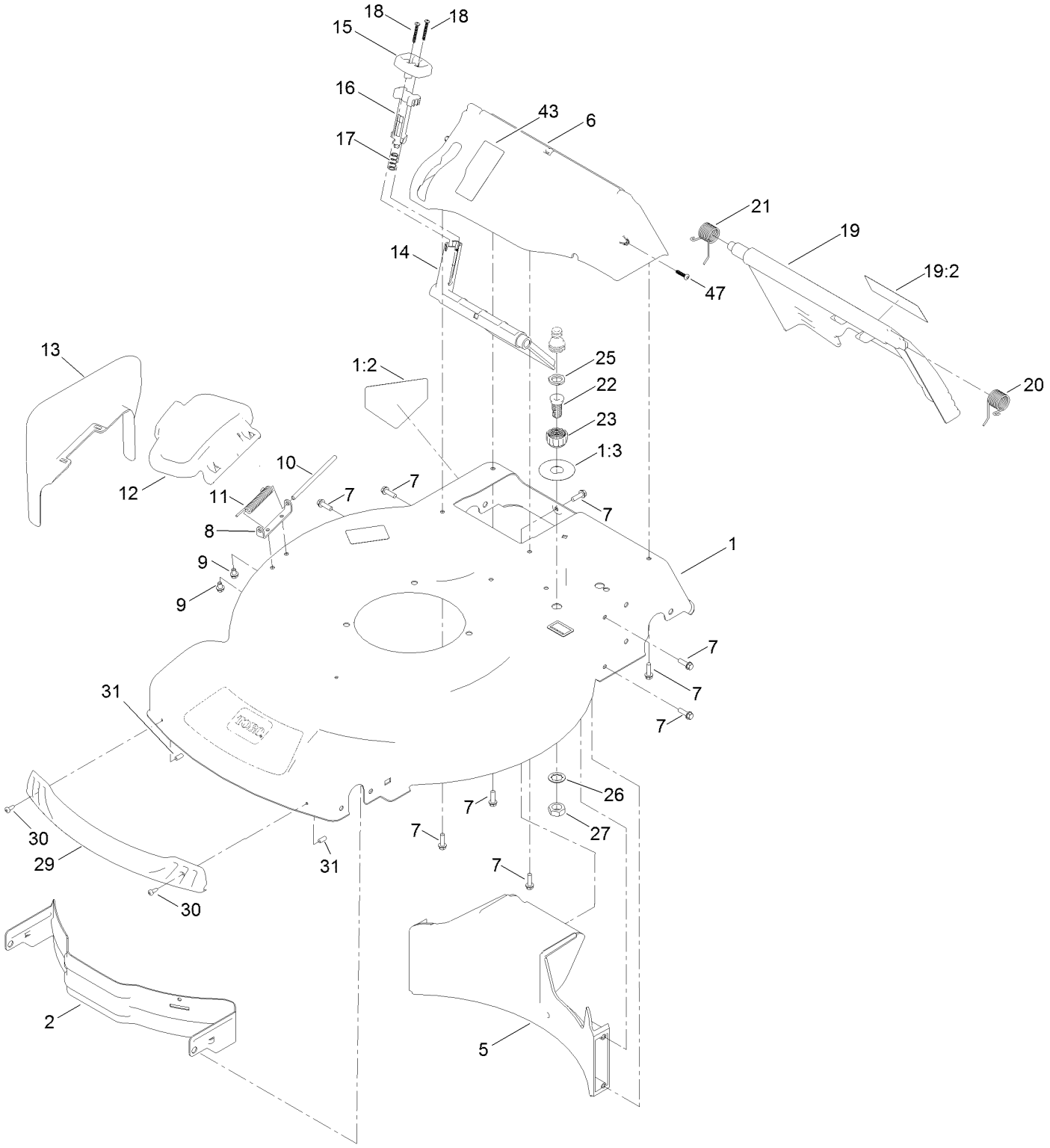

Housing Assembly (continued)

Ref.	Part Number	Qty.	Description
1	132-4510	1	Housing ASM
1:2	94-8072	1	Decal-Danger
1:3	137-9196	1	Decal-Quick Wash
2	114-7963-01	1	Baffle-Front
5	139-8982	1	Baffle-Rear
6	136-5882	1	Chute-Recycle
7	46-8091	9	Screw-HWH
8	112-6416	1	Bracket-Cover
9	99-8445	2	Screw-HWH
10	99-5291	1	Rod-Cover
11	99-5293	1	Spring-Torsion
12	115-8449	1	Deflector-Side
13	115-8447	1	Chute-Discharge, Side
14	114-7960	1	Deflector-Recycle
15	114-7958	1	Knob-Recycle
16	114-7959	1	Latch-Recycle
17	117-1031	1	Spring-Compression

Ref.	Part Number	Qty.	Description
18	32104-120	2	Screw-PPH
19	137-9139	1	Rear Door ASM
19:2	131-4514	1	Decal-Warning
20	115-2859	1	Spring-Torsion
21	114-7924	1	Spring-Torsion
22	112-6400	1	Port-Washout
23	112-6401	1	Coupling-Hose, Washout Port
25	112-6438	1	Washer-Seal, Washout Port
26	3254-5	1	Washer-Lock
27	3218-6	1	Nut-Jam
29	114-7987	1	Bumper
30	105-6849	2	Screw-Forming, Thread
31	130-6660	2	Cap-Plug
43	125-5026	1	Decal
47	108-7476	2	Screw-Plastite

Rear Bag Assembly

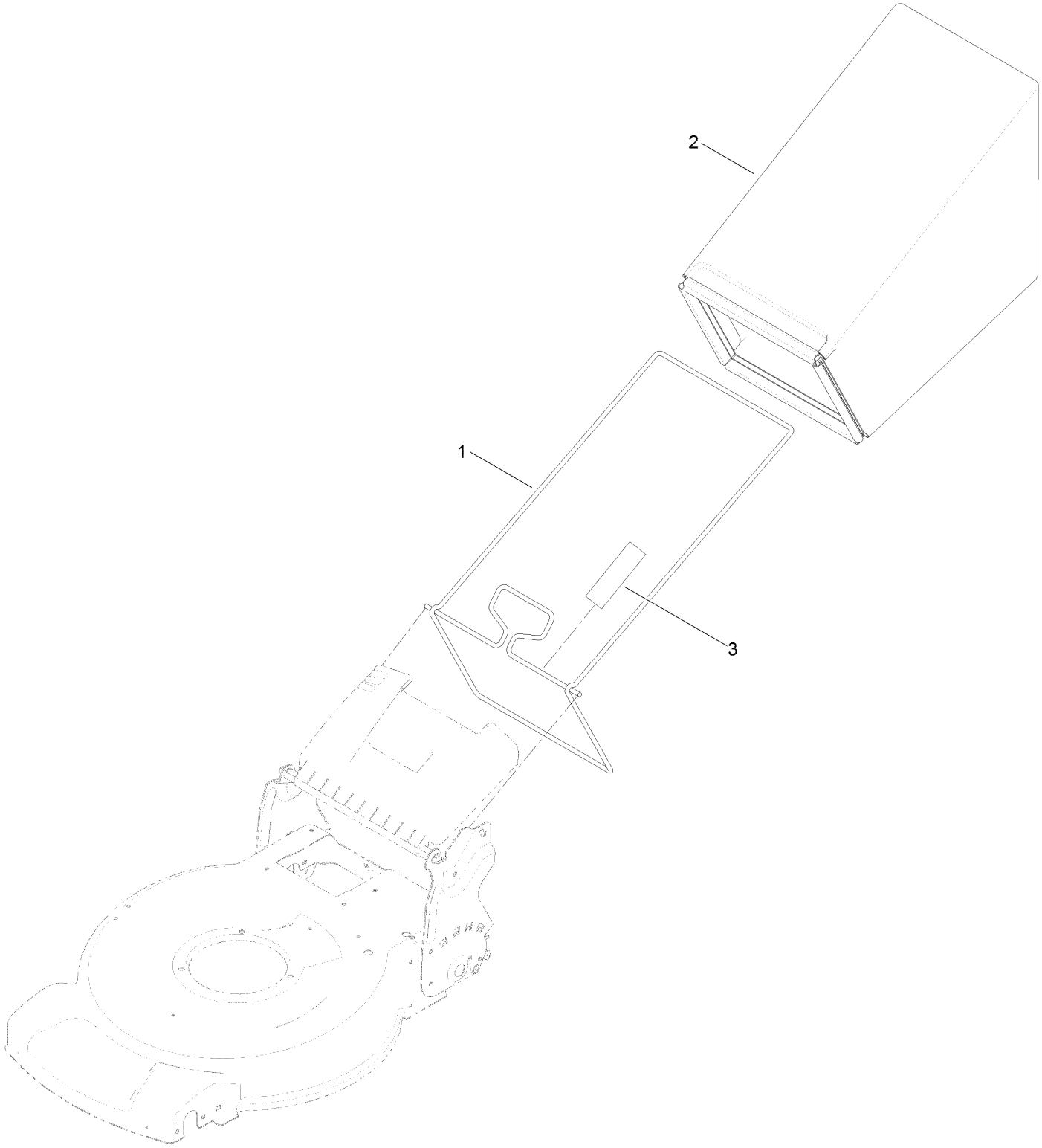

Rear Bag Assembly (continued)

Ref.	*Part Number*	*Qty.*	*Description*
1	132-4529-03	1	Bag Frame ASM
2	115-4673	1	Grass Bag ASM
3	139-8986	1	Decal-Warning

Motor and Blade Assembly

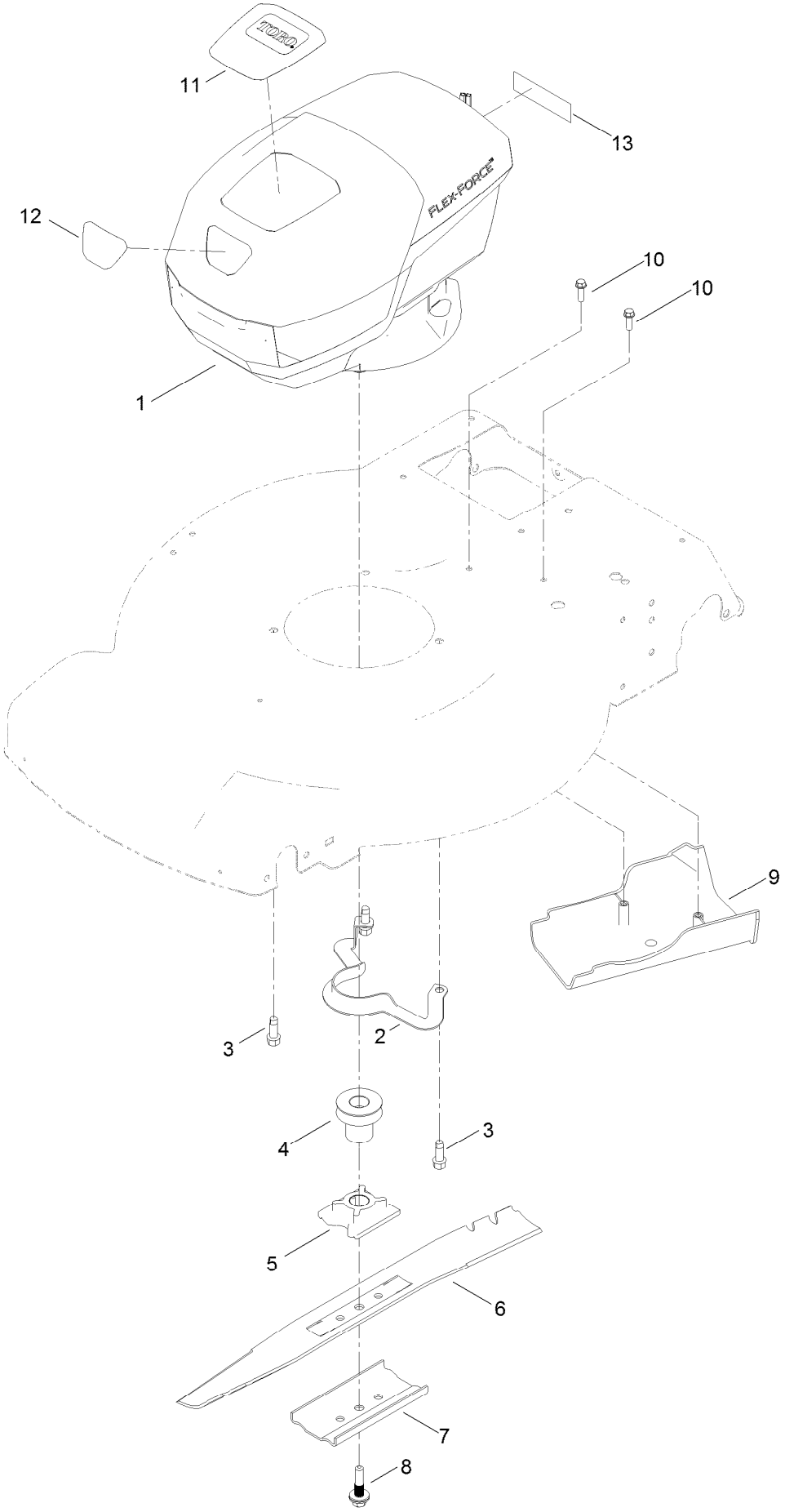

Motor and Blade Assembly (continued)

Ref.	Part Number	Qty.	Description
1	139-1680	1	Motor Module (60V)
2	105-3030-03	1	Guide-Belt
3	95-1726	3	Screw-Taptite
4	139-8961	1	Pulley
5	125-2454	1	Retainer-Blade
6	131-9683-03	1	Blade
7	108-3766-03	1	Support-Blade
8	117-5270	1	Bolt-Blade
9	114-7937	1	Cover-Belt
10	46-8091	2	Screw-HWH
11	136-9118	1	Decal-Hood, Top
12	136-9119	1	Decal-Hood, Front
13	133-8061	1	Decal-Warning

Motor Module Assembly No. 139-1680
Lower Shroud Assembly

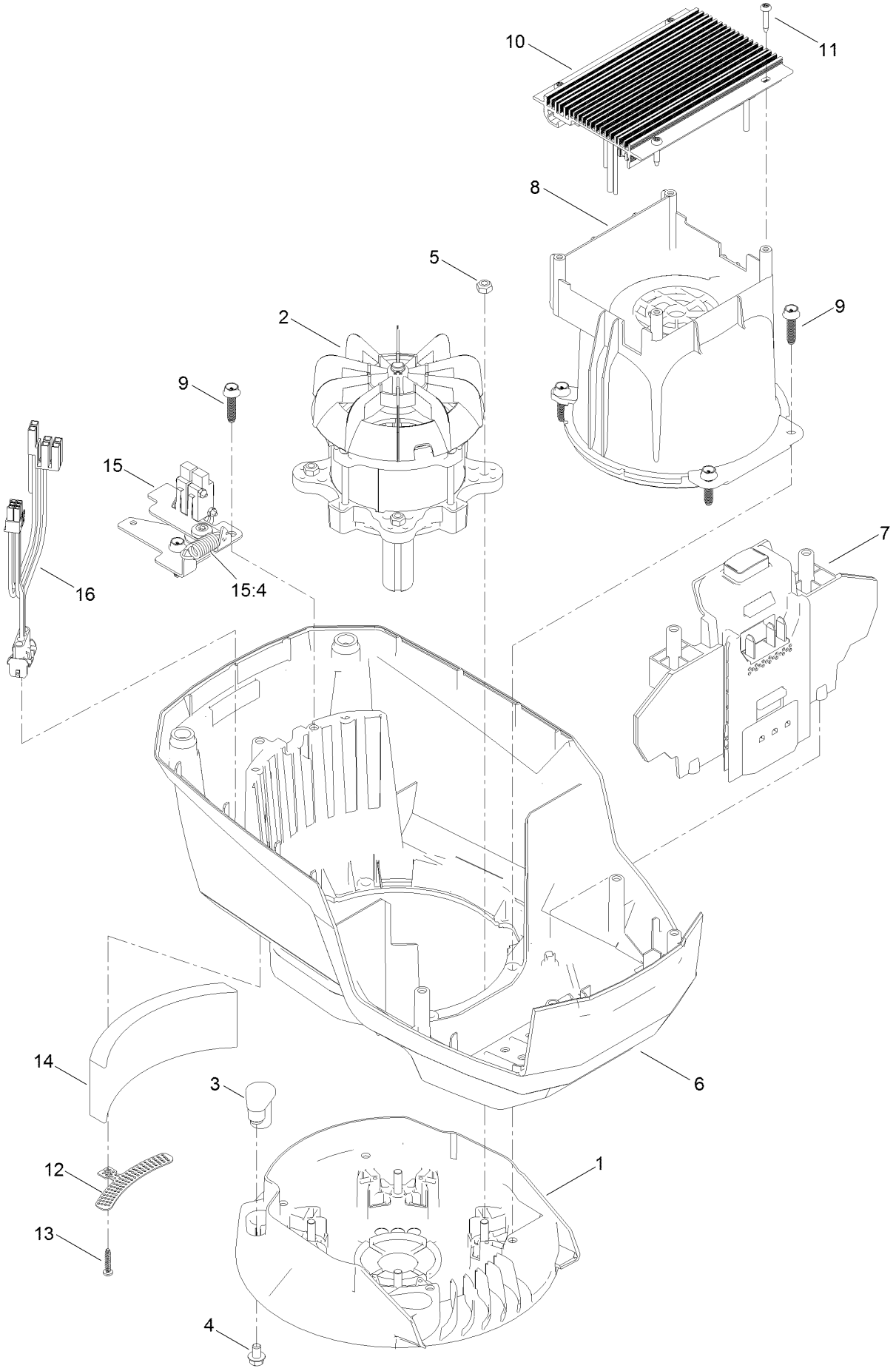

Motor Module Assembly No. 139-1680
Lower Shroud Assembly (continued)

Ref.	Part Number	Qty.	Description
1	139-6628	1	Base-Mount, Motor
2	139-6630	1	Motor
3	131-9732	3	Insert-Mount, Motor
4	137-4795	3	Screw
5	115-7373	4	Nut-Lock
6	139-6631	1	Shroud-Lower
7	139-6632	1	Battery Reciever ASM
8	139-6633	1	Shroud-Motor
9	130-6658	6	Screw-Flange, Plastic
10	139-6634	1	Driver-Motor
11	139-6642	4	Screw
12	139-6635	1	Bracket-Foam
13	138-3273	1	Screw-Plastic, PPH
14	139-6636	1	Foam
15	133-1918	1	Bail Switch ASM
15:4	104-6478	1	Spring-Extension
16	139-6637	1	Harness-Wire

Motor Module Assembly No. 139-1680
Upper Shroud Assembly

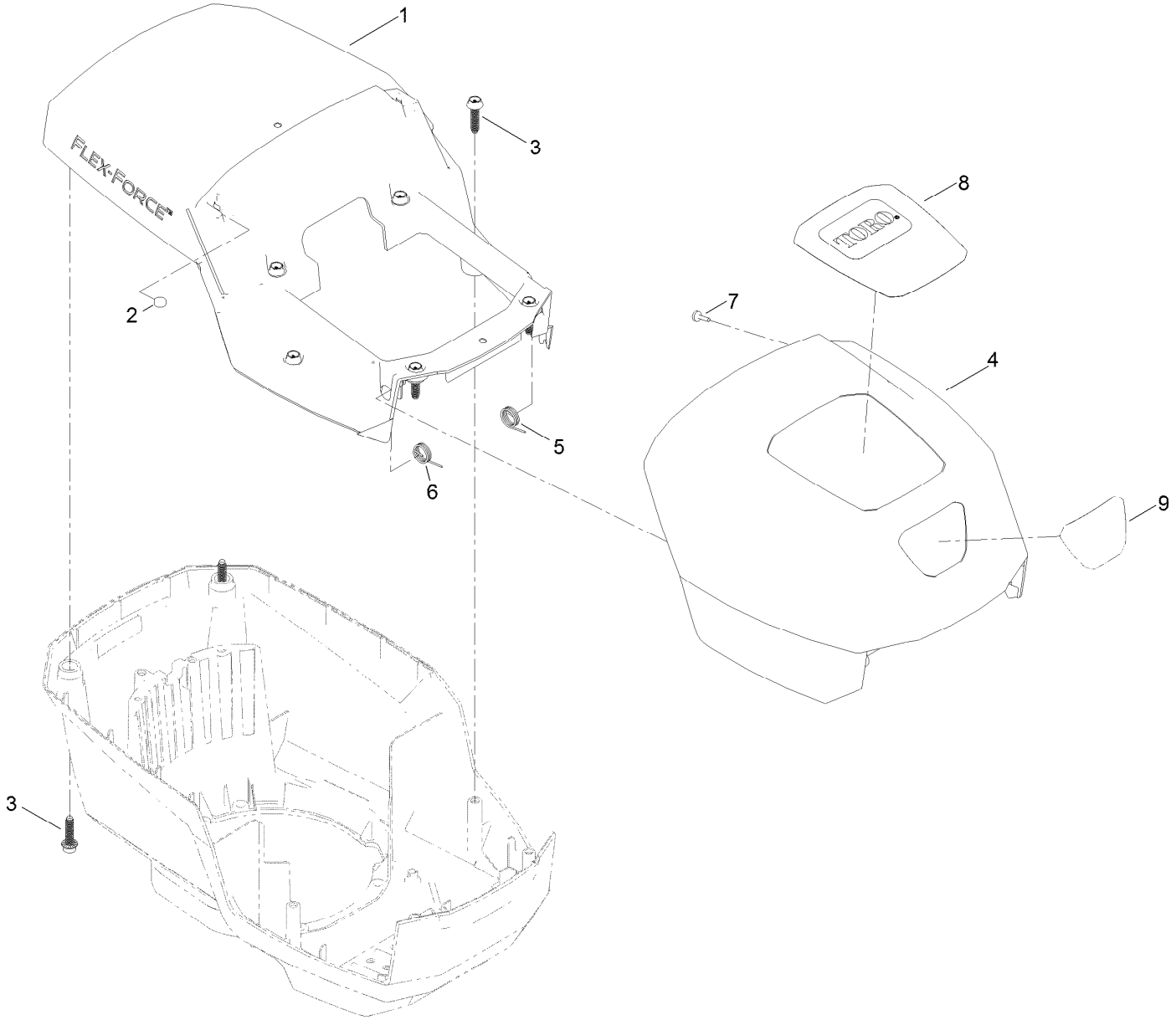

Motor Module Assembly No. 139-1680
Upper Shroud Assembly (continued)

Ref.	Part Number	Qty.	Description
1	139-6638	1	Shroud-Upper
2	114-5896	2	Magnet
3	130-6658	8	Screw-Flange, Plastic
4	139-6639	1	Hood
5	139-6640	1	Spring-LH
6	139-6641	1	Spring-RH
7	95-4234	2	Screw-PPH
8	136-9118	1	Decal-Hood, Top
9	136-9119	1	Decal-Hood, Front

Front Wheel and Height-of-Cut Assembly

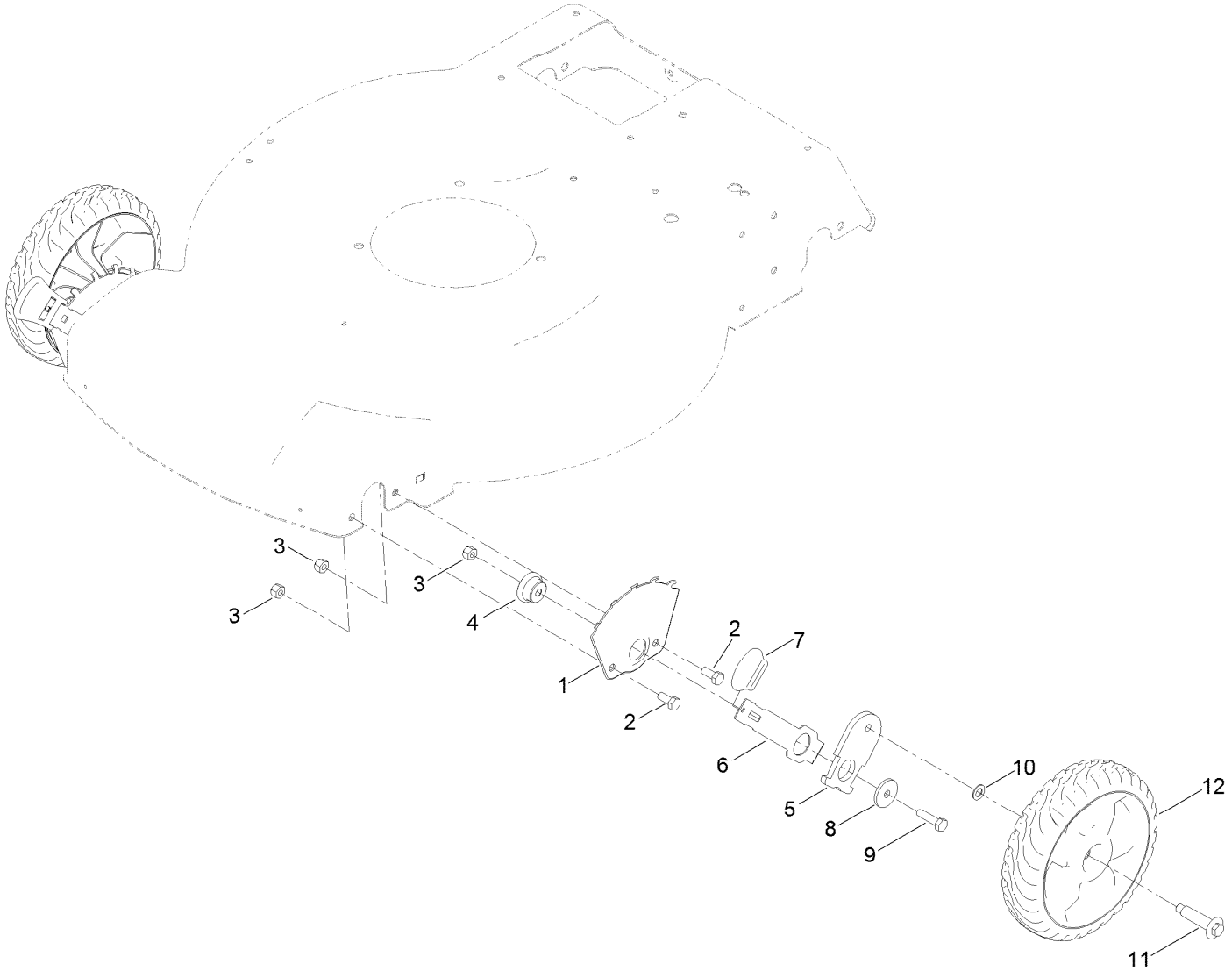

Front Wheel and Height-of-Cut Assembly (continued)

Ref.	Part Number	Qty.	Description
1	115-1956-03	2	Plate-HOC, Front
2	322-3	4	Screw-HH
3	3296-29	6	Nut-Lock, NI
4	105-1818	2	Bushing-Mount, HOC
5	137-9128	2	Arm-Pivot, Front
6	105-1809	2	Arm-Spring
7	110-0549	2	Knob-HOC
8	105-3048	2	Washer-Flat
9	322-6	2	Screw-HH
10	40-1940	2	Washer
11	614650	2	Bolt-Shoulder
12	137-4833	2	8In Wheel ASM

Rear Wheel and Height-of-Cut Assembly

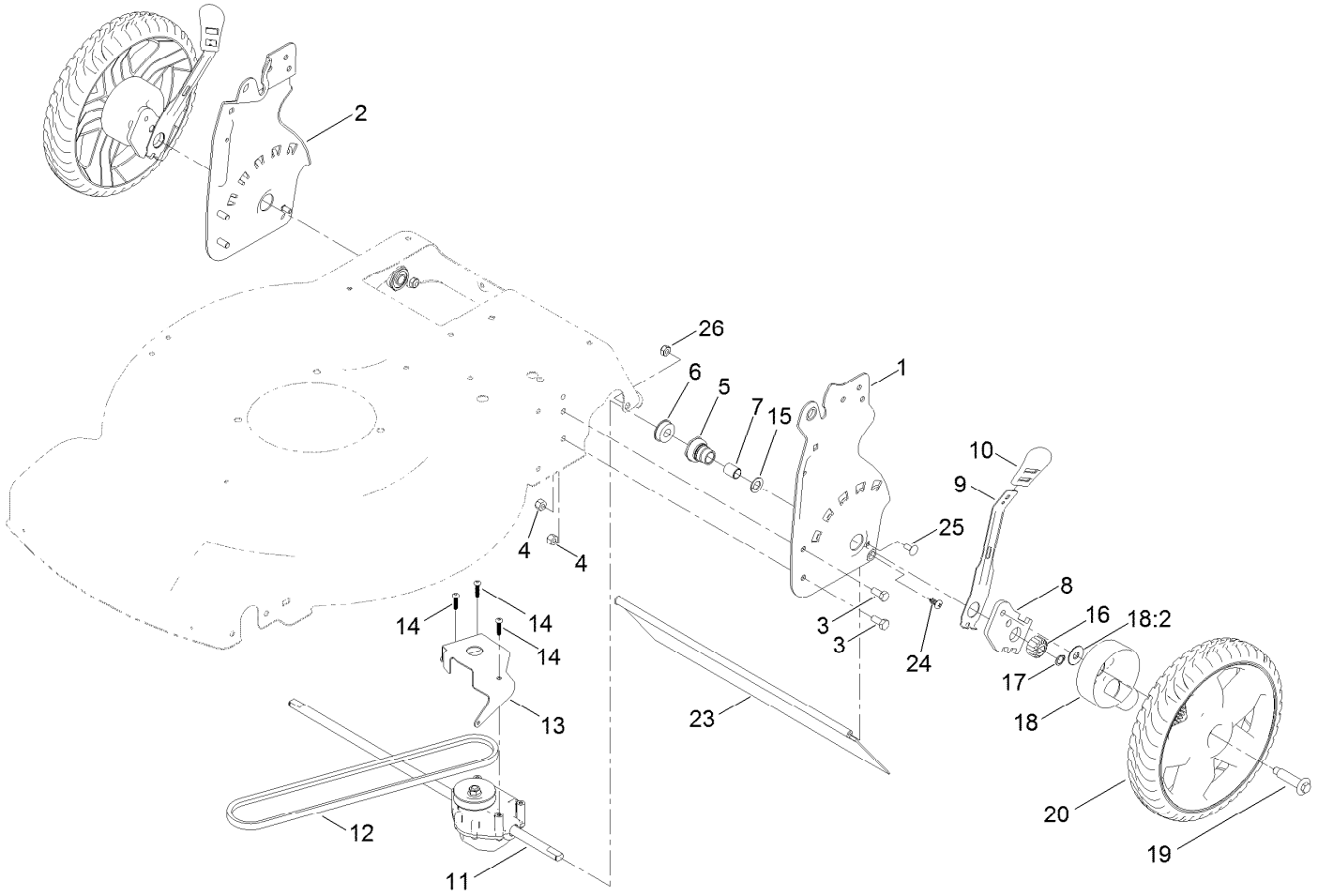

Rear Wheel and Height-of-Cut Assembly (continued)

Ref.	Part Number	Qty.	Description
1	136-5887-03	1	Plate-HOC, Rwd (LH)
2	136-5888-03	1	Plate-HOC, Rwd (RH)
3	322-3	4	Screw-HH
4	3296-29	4	Nut-Lock, NI
5	108-9779	2	Retainer-Bushing, HOC
6	104-8699	2	Bearing-Ball
7	108-9782	2	Bushing-Sleeve
8	136-9090	2	Arm-Pivot, Rear
9	132-4486	2	Arm-Spring
10	110-0549	2	Knob-HOC
11	137-4825	1	Transmission-Rwd (6:1)
12	91-2258	1	Belt-V
13	132-4481-01	1	Bracket-Transmission

Ref.	Part Number	Qty.	Description
14	108-7476	3	Screw-Plastite
15	110-7191	2	Washer-Thrust
16	131-5399	2	Gear-Pinion, 15T
17	32151-61	2	Ring-Retaining
18	136-9059	2	Gear Cover ASM
18:2	614426	1	Washer-Stepped
19	614650	2	Bolt-Shoulder
20	137-4843	2	Wheel Gear ASM (11In)
23	120-7012	1	Shield-Trailing
24	117-1092	2	Screw-PTH
25	3229-11	2	Screw-CARR
26	3296-16	2	Nut-Lock, NI

Handle Assembly

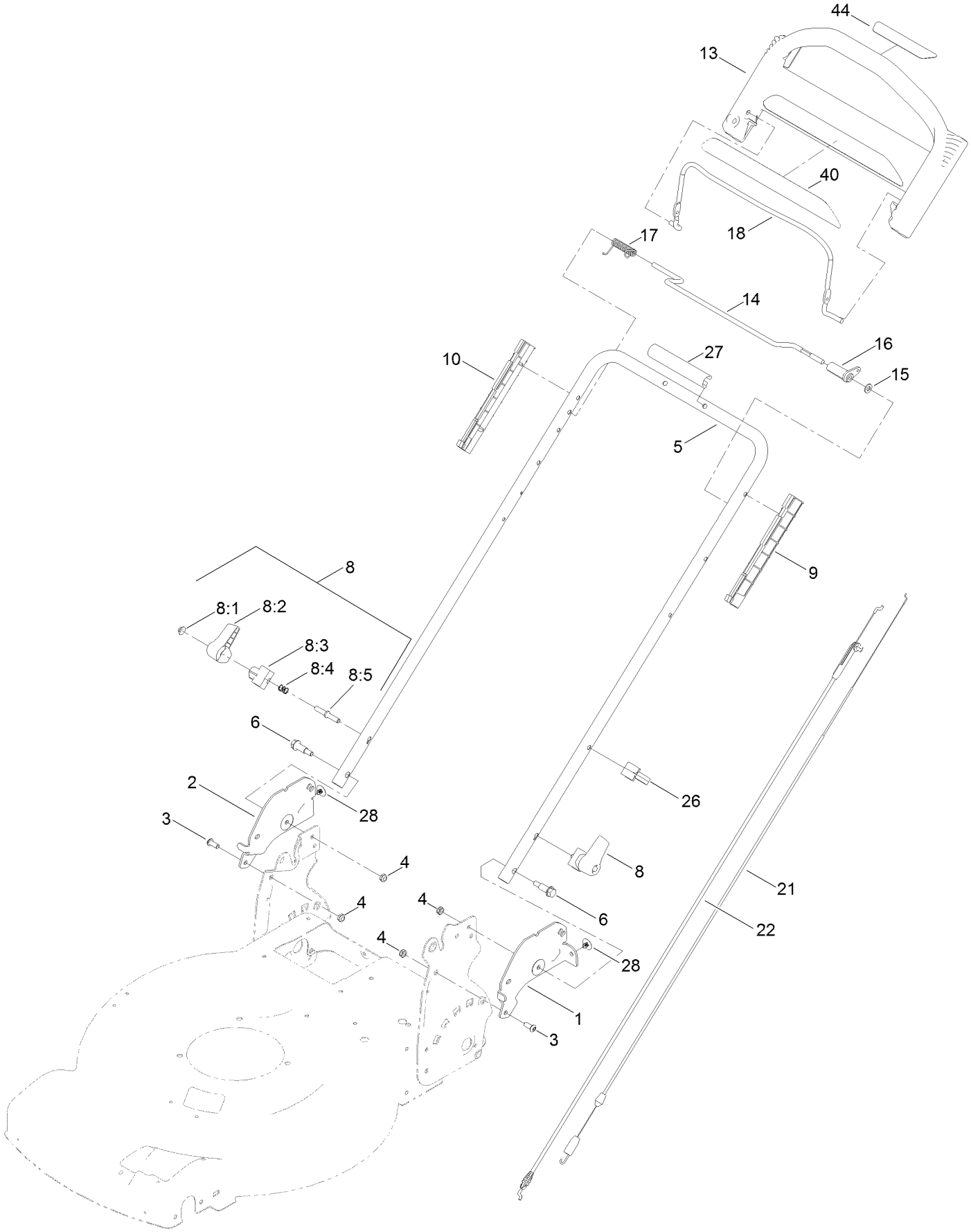

Handle Assembly (continued)

Ref.	Part Number	Qty.	Description
1	137-9109-03	1	Plate-Handle, LH
2	137-9110-03	1	Plate-Handle, RH
3	3274-55	2	Screw-HSBH
4	3296-47	4	Nut-Lock, NI
5	132-4471-05	1	Handle
6	130-2344	2	Bolt-Shoulder
8	115-2860	2	Quick Release ASM
8:1	32112-11	1	Nut-Push
8:2	138-3248	1	Lever-Release
8:3	138-3253	1	Anchor-Spring
8:4	115-2858	1	Spring-Compression
8:5	138-3243	1	Rod-Release
9	105-6842	1	Guide-LH
10	105-6841	1	Guide-RH

Ref.	Part Number	Qty.	Description
13	104-8678	1	Handle-Control
14	136-7150	1	Bar-Control, Traction
15	3256-23	1	Washer-Plain
16	99-1589	1	Lever-Traction
17	136-7166	1	Spring-Torsion
18	131-0880-03	1	Bail-Brake
21	115-8435	1	Cable-Traction
22	115-8437	1	Cable-Brake
26	114-7988	1	Guide-Cable
27	131-4551	1	Cover-Handle
28	130-6721	2	Clip-Tree
40	117-1019	1	Decal
44	137-4802	1	Decal-Controls (60V)

Starter Switch Assembly

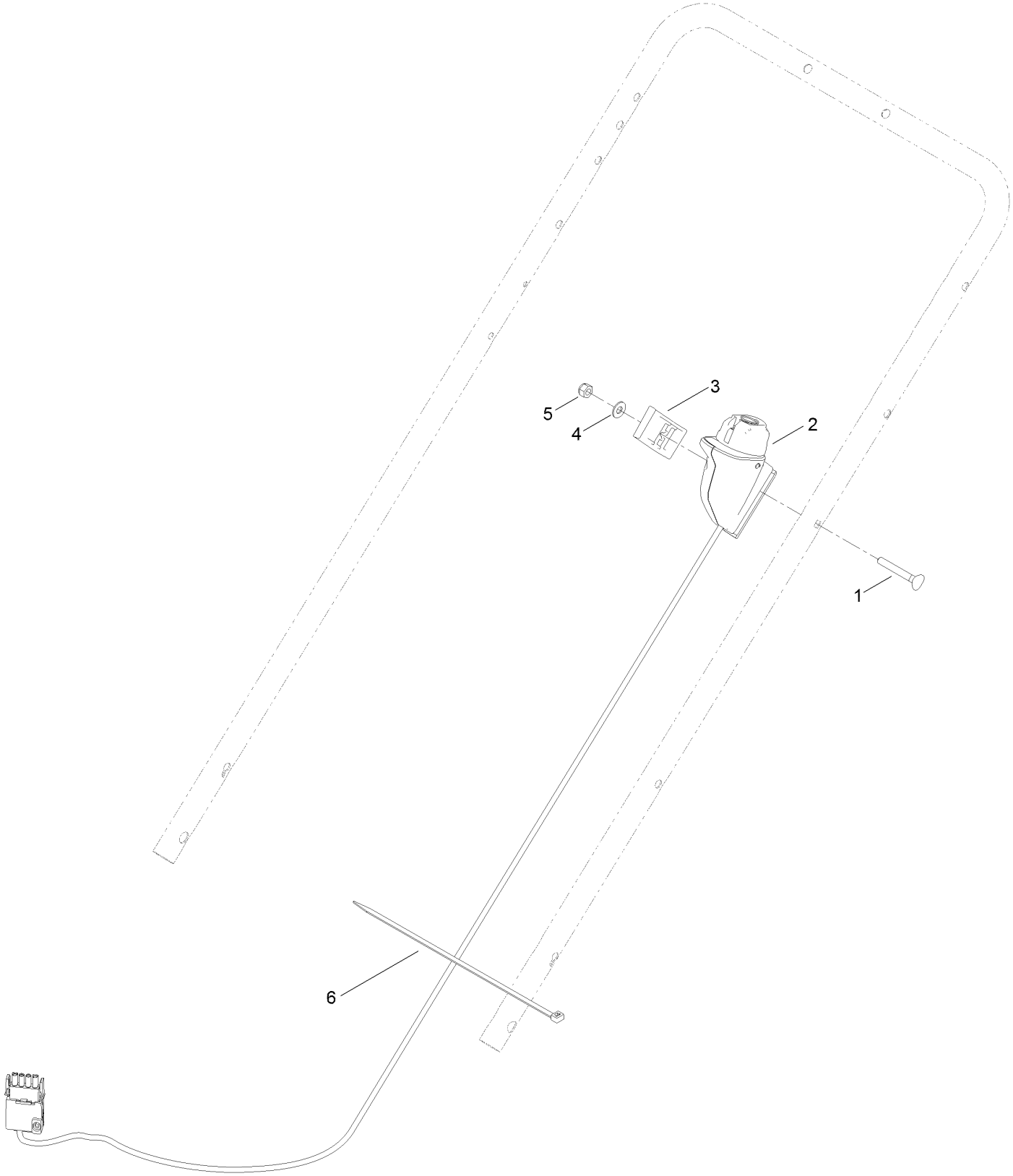

Starter Switch Assembly (continued)

Ref.	Part Number	Qty.	Description
1	95-4453	1	Screw
2	133-8140	1	Starter Switch ASM
3	136-7029	1	Clamp-Cable
4	3256-1	1	Washer-Flat
5	3296-73	1	Nut-Lock, NI
6	614249	1	Tie-Cable

Attachments and Accessories

For 20363 Flex-Force Power System 60V MAX 22in Recycler Lawn Mower

Product Name	Model/Part
Traction Assist Handle Kit	131-4590
8 Inch Wheel ASM	137-4833P
Lawn Striping Kit with 22in Roller	20601
Smart Stow Walk Power Mower Cover	490-2012
Bag-Walk Behind (Toro)	490-7318
Replacement Bag	59310
22 Inch Atomic Blade	59534P

For 20363T Flex-Force Power System 60V MAX 22in Recycler Lawn Mower

Product Name	Model/Part
Traction Assist Handle Kit	131-4590
8 Inch Wheel ASM	137-4833P
Lawn Striping Kit with 22in Roller	20601
Smart Stow Walk Power Mower Cover	490-2012
Bag-Walk Behind (Toro)	490-7318
Replacement Bag	59310
22 Inch Atomic Blade	59534P

Notes:

TORO®

Count on it.