TORO Count on it.

P220G Series Plastic Valve
Installation and Operating Instructions

Introduction

The P220G Series valves are available in two operation and two activation types.

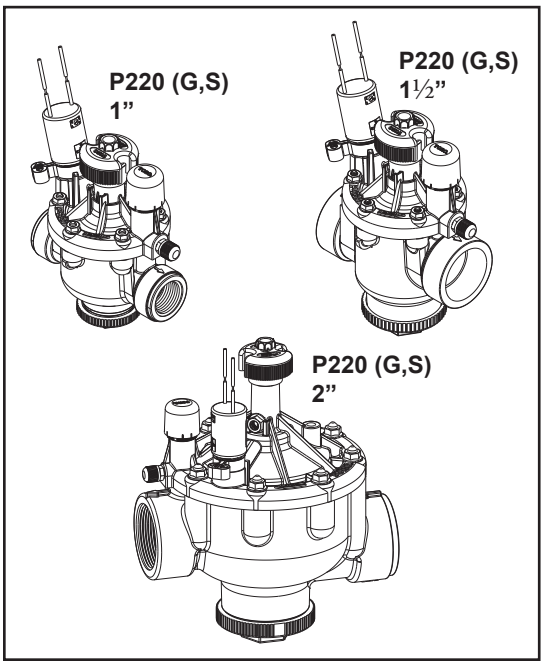

Operation

- P220G is intended for golf and commercial applications with normal water conditions.
- P220GS “Scrubber Valve” models are intended for applications with dirty water conditions. These models include Toro’s patented “ACT” system with a rotating turbine that continuously cleans the stainless steel screen during operation.

Activation

AC powered - For satellite systems, the 24 VAC Spike Guard solenoid provides 20,000 volt lightning protection to minimize down time and service costs. Moreover, it draws less than half the wattage of traditional solenoids for a lower long-term cost of ownership.

DC powered - For GDC 2-wire systems, a DC-latching solenoid reduces the system wire load to lower initial system cost. It is activated by a momentary pulse “on” and “off”, meaning there is no continuous power draw, providing a lower long-term cost of ownership.

The P220G EZReg pressure regulator adjusts easily with the micro-adjust dial and indicator to provided constant downstream pressure between 5-100 psi (,34-6,9 bar).

Note: The P220G valve should be installed below grade in a valve box or vault (see page 2) to provide service access and vandal resistance. The valve installation site should be readily accessible by grounds maintenance personnel and well clear of hardscape features, cart paths, and foot traffic areas.

Specifications

Configuration

- globe and angle forward flow
- plastic and stainless steel construction
- 1” (25 mm), 1 ½” (40 mm), 2” (50 mm) NPT and BSP models
- electric actuation
- pressure regulating

Dimensions

1”	6¾” H x 3⅝” W
25 mm	171 mm H x 92 mm W
1½”	7¼” H x 3⅝” W
40 mm	184 mm H x 92 mm W
2”	7½” H x 6⅛” W
50 mm	241 mm H x 156 mm W

Flow Range

1” (25 mm)	5-40 gpm 19-151 lpm
1½” (40 mm)	30-100 gpm 114-379 lpm
2” (50 mm)	80-180 gpm 303-681 lpm

Operating Pressure Range

- Inlet - 1” and 1½” models: 10-220 psi (,69-15,2 bar)
- Inlet - 2” models: 20-220 psi (1,39 - 15,2 bar)
- Outlet: 5-100 +/- 3 psi (,34-6,89 bar +/- ,2 bar)
- minimum inlet / outlet differential: 10 psi (,69 bar)
- burst pressure safety rating: 750 psi (51,7 bar)

SpikeGuard solenoid
(for satellite control systems)
24 VAC, 50/60 Hz
Inrush - 0.12 amps
Holding - 0.10 amps

DC-latching solenoid
(for GDC 2-Wire control systems)
momentary low-voltage pulse

Diaphragm
EPDM diaphragm for improved chlorine resistance

Manual Flow Control
adjustable to zero flow

Manual Bleed
enables manual valve operation
bleeds off water internally downstream

EZReg Pressure Regulator

- compact, precision-dial design
- regulates during automatic and manual operation
- serviceable while valve is pressurized
- poppet valve (Schrader-type) for downstream pressure verification

Installation

- Note the flow direction arrow in the side of the valve body and install accordingly.
- The valve can be installed at any angle without affecting operation.
- Use direct-burial irrigation control wire for connection from the controller to valves.
- Leave a 12” (305 mm) wire expansion loop at each valve location on long-run wire lengths.
- Waterproof wire splice connectors are absolutely essential for proper electric control system operation. Follow the installation instructions provided by the connector manufacturer for optimum performance.

Chart showing the maximum one-way wire distance between controller and valve solenoid *

feet / meters

Common Wire Gauge Size	Control Wire Gauge Size						
	18	16	14	12	10	8	6
18	2040	2520	2940	3280	3540	3720	3860
	622	768	896	1000	1079	1134	1177
16	2520	3260	4000	4660	5220	5620	5920
	768	994	1219	1420	1591	1713	1804
14	2940	4000	5180	6360	7420	8300	8960
	896	1219	1579	1939	2262	2530	2731
12	3280	4660	6360	8240	10100	11800	13180
	1000	1420	1939	2512	3078	3597	4017
10	3540	5220	7420	10100	13180	16060	18770
	1079	1591	2262	3078	4017	4895	5721
8	3720	5260	8300	11800	16060	20800	25540
	1131	1603	2530	3597	4895	6340	7785
6	3860	5960	8960	13180	18700	25540	33080
	1177	1817	2731	4017	5700	7785	10083

* Distances specified under the following conditions: minimum voltage: 20 VAC, amperage: 0.12A, operating pressure: 150 psi (10,3 bar).

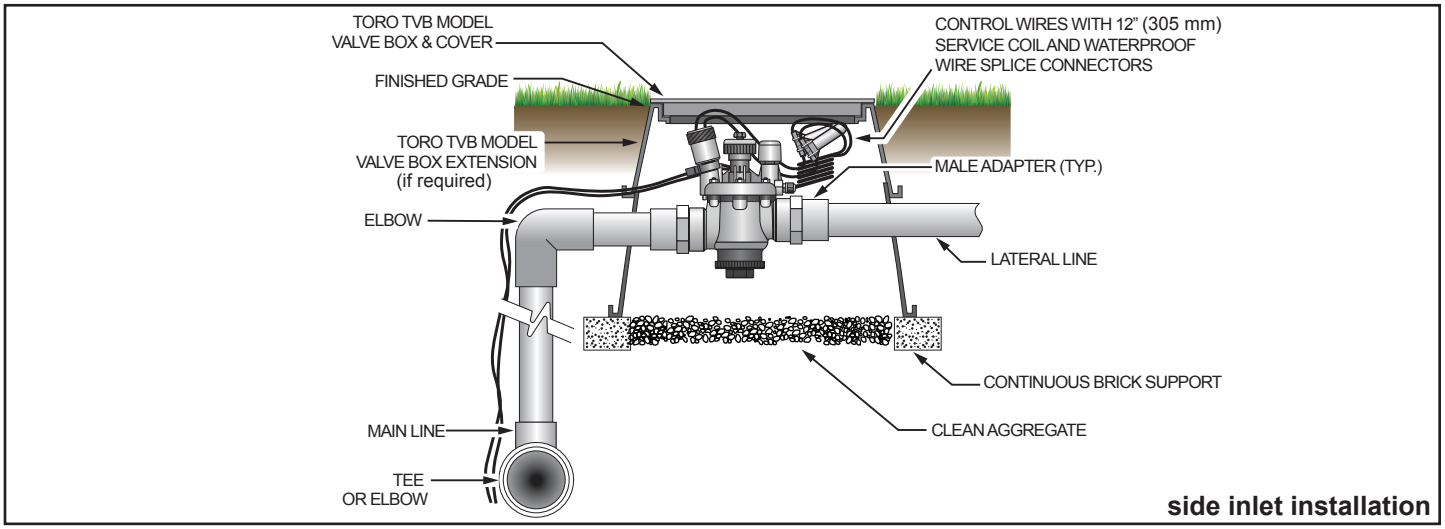

side inlet installation

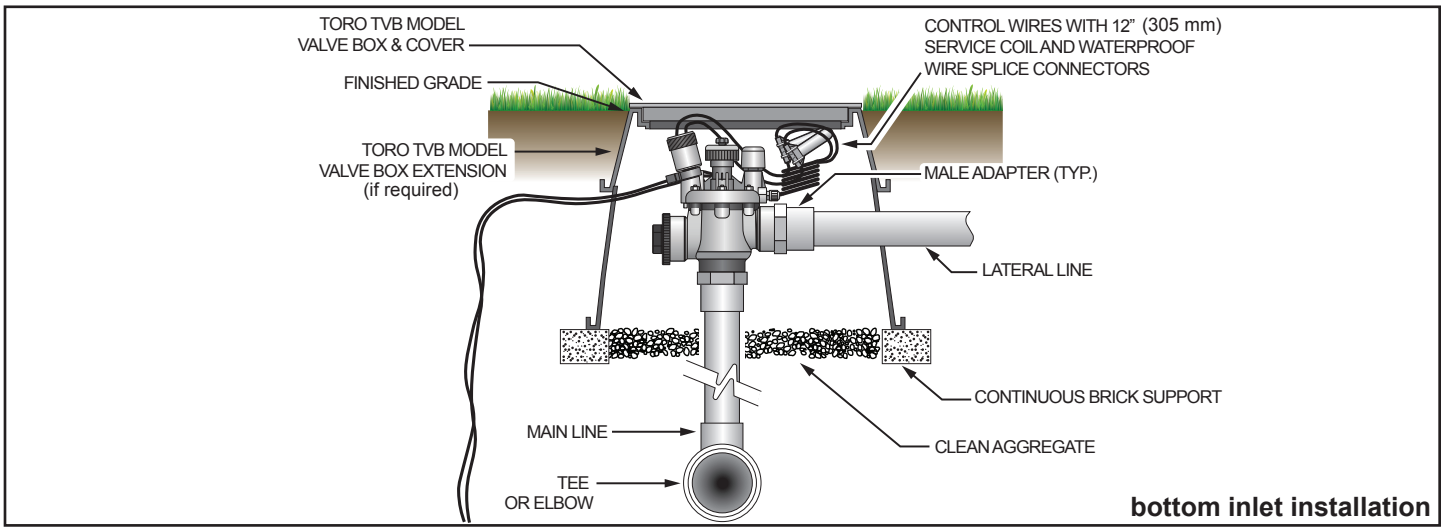

bottom inlet installation

Valve Adjustment

Flow Control

The flow control is used to reduce the flow and pressure to valve outlet. By turning the flow control handle clockwise, the flow will be gradually reduced to zero.

Note: The flow control should remain in the fully open position. Use only for emergency shut off or for valve zone fine-tuning.

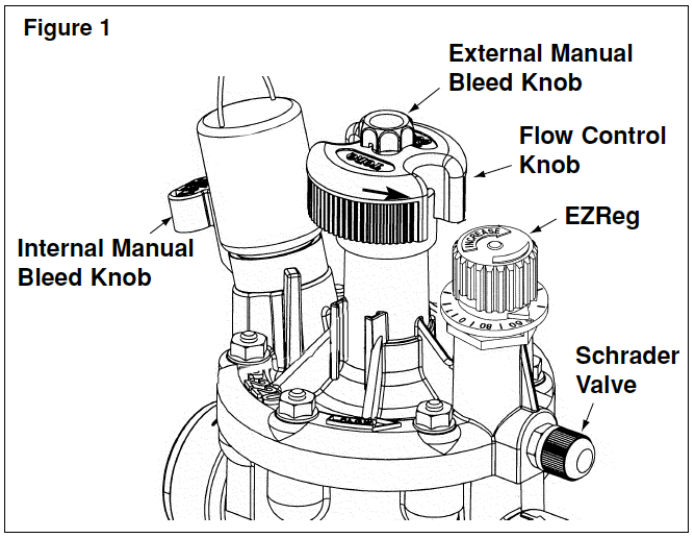

Internal Bleed Knob - Downstream pressure regulation maintained

The internal manual bleed system is used to manually operate the valve. Turning the internal bleed knob (located beneath the solenoid) counterclockwise allows water to bleed downstream from the diaphragm chamber. Internal pressure is relieved from the top of the diaphragm, allowing the valve to open. Turning the bleed knob clockwise until tight shuts off the discharge enabling pressure to build within the diaphragm chamber, causing the valve to close.

External Manual Bleed Knob (flush mode)

The external manual bleed knob, located on top of the flow control handle, is used for system flushing. Turning this knob counterclockwise allows water in the diaphragm chamber to vent to atmosphere, creating maximum opening power and debris flushing action. This operation bypasses the regulator and opens the valve fully, regardless of regulator setting. In addition, the metering rod (attached to the external bleed knob) can be easily removed for cleaning as necessary.

EZReg Adjustment

An accurate, adjustable dial, coupled with a forward-flow valve design, allows the P220 series valve with EZReg to regulate downstream water pressure with precision. It's easy and simple to use and requires only 10 PSI differential pressure to operate. The EZReg will operate during powered and manual valve operation using internal manual bleed.

To adjust the downstream pressure, remove the cover from the regulator dial, then turn the dial until the pointer is on the desired pressure of 5-100 PSI (EZR-100).

Note: Due to the micro-adjustment feature of the EZReg, the dial requires 10 revolutions for complete regulation range.

Operate the valve (electrically or manually). Check the flow control to confirm that it is in the fully open position. Adjust the regulator dial if necessary for optimum sprinkler operation.

To confirm the downstream pressure using a pressure gauge, remove the cap from the Schrader-type valve located directly below the EZReg. Attach a Toro pressure gauge (Model 995-51) to the Schrader-type valve for a direct reading. Adjust the EZReg dial as necessary for the desired pressure.

Note: The valve will remain watertight in the closed position if removal of the EZReg assembly is required.

Friction Loss Charts

P220G Standard Valves

Friction Loss in PSI																		
GPM	**Type**	**5**	**10**	**20**	**30**	**40**	**50**	**60**	**70**	**80**	**90**	**100**	**110**	**120**	**130**	**140**	**150**	**180**
1”	globe	4.00	4.20	3.20	4.10	7.20												
	angle	4.00	4.20	3.10	2.70	4.80												
1 1/2”	globe				1.60	2.30	3.60	5.20	7.00	9.20	11.20	13.60	16.40					
	angle				1.30	1.60	2.80	4.00	5.50	7.10	8.90	10.90	13.50					
2”	globe									2.10	2.70	3.30	4.00	4.80	5.60	6.50	7.50	8.70
	angle									1.20	1.60	2.00	2.40	2.80	3.30	3.90	4.40	5.20

Friction Loss in BAR																		
LPM	**Type**	**19**	**38**	**76**	**114**	**152**	**190**	**227**	**265**	**303**	**341**	**379**	**417**	**455**	**493**	**531**	**569**	**682**
25 mm	globe	2.76	2.89	2.20	2.82	4.96												
	angle	2.76	2.89	2.14	1.86	3.31												
40 mm	globe				1.10	1.58	2.48	3.58	4.82	6.34	7.72	9.37	11.30					
	angle				0.90	1.10	1.93	2.76	3.79	4.89	6.13	7.51	9.30					
50 mm	globe									1.45	1.86	2.27	2.76	3.31	3.86	4.48	5.17	5.99
	angle									0.83	1.10	1.38	1.65	1.93	2.27	2.69	3.03	3.58

P220G Scrubber Valves

Friction Loss in PSI																	
GPM	**Type**	**5**	**10**	**20**	**30**	**40**	**50**	**60**	**70**	**80**	**90**	**100**	**110**	**120**	**130**	**140**	**150**
1”	globe	4.63	4.74	3.10	6.05	10.75											
	angle	4.14	4.64	2.54	5.53	9.46											
1 1/2”	globe			1.14	1.56	2.85	4.36	6.28	8.57	11.20	14.03	17.20	20.46				
	angle			0.95	1.51	2.28	3.69	5.29	6.97	9.26	11.80	14.60	17.40				
2”	globe									3.57	4.62	5.33	6.80	8.20	9.02	10.46	11.61
	angle									2.79	3.50	4.41	5.62	6.39	7.35	8.81	9.37

Friction Loss in BAR																	
LPM	**Type**	**19**	**38**	**76**	**114**	**152**	**190**	**227**	**265**	**303**	**341**	**379**	**417**	**455**	**493**	**531**	**569**
25 mm	globe	3.19	3.27	2.14	4.17	7.41											
	angle	2.85	3.20	1.75	3.81	6.52											
40 mm	globe			0.79	1.07	1.96	3.00	4.33	5.90	7.72	9.67	11.85	14.10				
	angle			0.65	1.04	1.57	2.54	3.64	4.80	6.38	8.13	10.06	11.99				
50 mm	globe									2.46	3.18	3.67	4.69	5.65	6.21	7.21	8.00
	angle									1.92	2.41	3.04	3.87	4.40	5.06	6.07	6.46

TORO®

Count on it.

© 2016 The Toro Company • Irrigation Division • 1-877-345-8676