Form No. 3418-696 Rev A

TORO®

Count on it.

Parts Catalog

Super Recycler®

Lawn Mower

Model No. 20384—Serial No. 402082000 and Up

Register at www.Toro.com.
Original Instructions (EN)

3418-696 A

Ordering Replacement Parts

To order replacement parts, please supply the part number, the quantity, and the description of each part desired.

Understanding Reference Numbers

Each identified part in an illustration has a reference number. The reference number for a part also appears in the parts list, along with other information about the part.

This catalog uses two special reference number formats, one to indicate parts in a service assembly and another to indicate the quantity of a given part in an illustration.

Service Assembly Reference Numbers

Parts in service assemblies have reference numbers in the form a:b. The a represents the reference number of the entire service assembly and the b represents a sequential number unique to each part within the service assembly.

For example, a wheel assembly might be identified by reference number 6, the tire by 6:1, the valve by 6:2, and the wheel by 6:3. When you order the assembly identified by reference number 6, you receive all parts identified by reference numbers 6:1,6:2, and 6:3. However, you may also order any part individually. Reference numbers of this type appear in illustration and in parts lists.

Reference Numbers Indicating Quantity

In an illustration, if a reference number indicates more than one part, the reference number has the form nX y. The n represents the quantity of the part, the X is the multiplication symbol, and the y represents the reference number.

For example, in an illustration, the reference number 2X 37 means that two of the parts identified by reference number 37 are indicated.

Contents

Frame Assembly 4
Housing Assembly No. 115-2854 6
Rear Door and Mulch Plug Assembly 8
Bag Assembly 10
Engine and Blade Assembly 12
Fuel System and Carburetor Assembly 14
Air Intake and Filtration Assembly 16
Ignition and Electrical Assembly 18
Crankcase Assembly 20
Governor Assembly 22
Piston and Cylinder Head Assembly 24
Blower Housing Assembly 26
Front Wheel and Height-of-Cut Assembly 28
Rear Wheel and Height-of-Cut Assembly 30
Handle Assembly 32
Electrical Assembly 34
Attachments and Accessories 36

© 2017—The Toro® Company
8111 Lyndale Avenue South
Bloomington, MN 55420

Contact us at www.Toro.com.
Printed in the USA.
All Rights Reserved

Frame Assembly

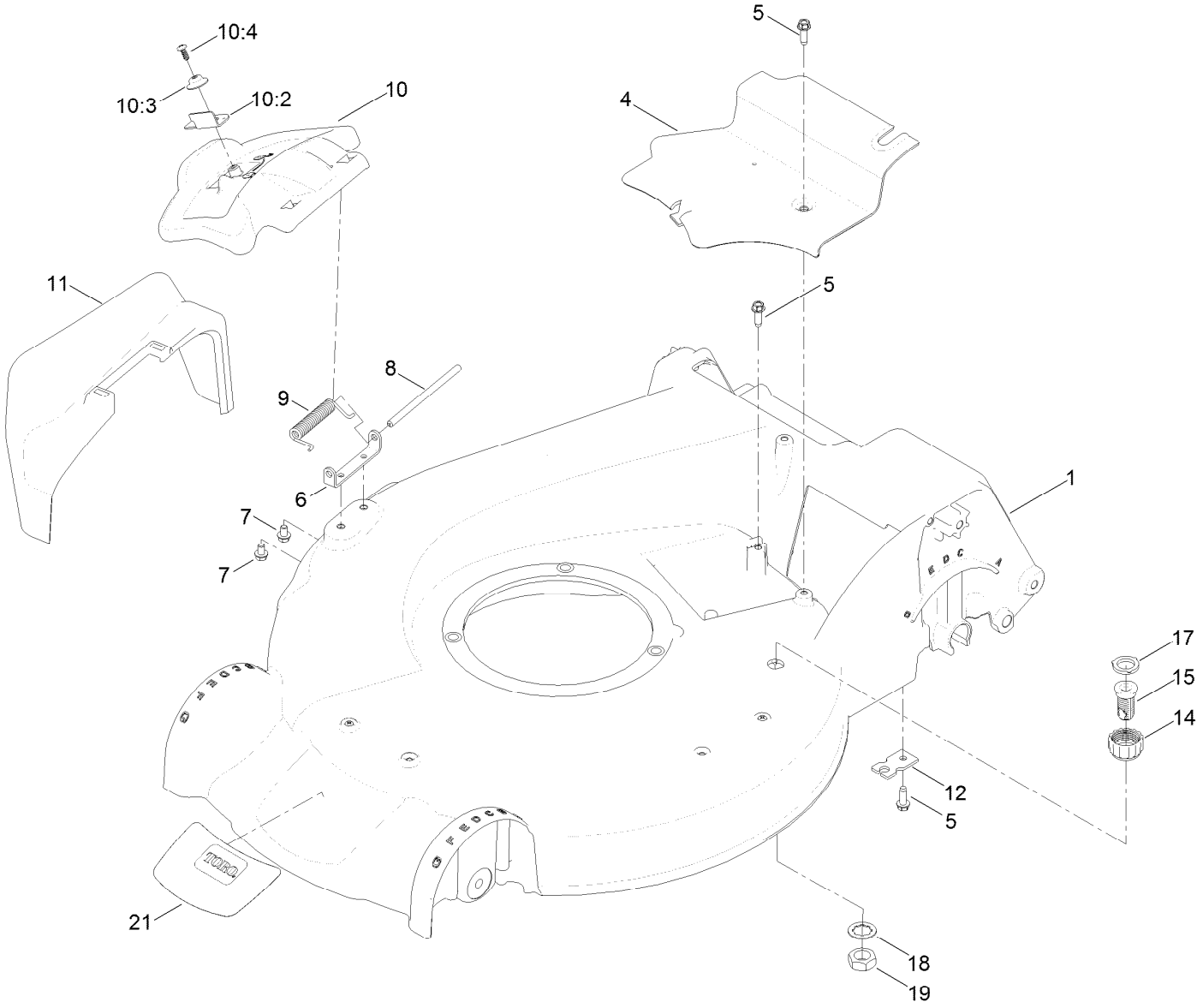

Frame Assembly (continued)

Ref.	Part Number	Qty.	Description
1	115-2854	1	Housing ASM
4	107-7494	1	Cover-Belt
5	49-2040	2	Screw-HWHTF
6	112-6416	1	Bracket-Cover
7	99-8445	2	Screw-HWH
8	99-5291	1	Rod-Cover
9	99-5293	1	Spring-Torsion
10	107-3717	1	Discharge Door ASM
10:2	107-0795	1	Latch-Door
10:3	107-7456	1	Cap-Door
10:4	107-7461	1	Screw-Plastite
11	108-3753	1	Chute-Discharge, Side
12	107-7497	1	Bracket-Cable, Traction
14	112-6401	1	Coupling-Hose, Washout Port
15	112-6400	1	Port-Washout
17	112-6438	1	Washer-Seal, Washout Port
18	3254-5	1	Washer-Tooth, Internal
19	3218-6	1	Nut-Jam
21	136-7097	1	Decal-Deck

Housing Assembly No. 115-2854

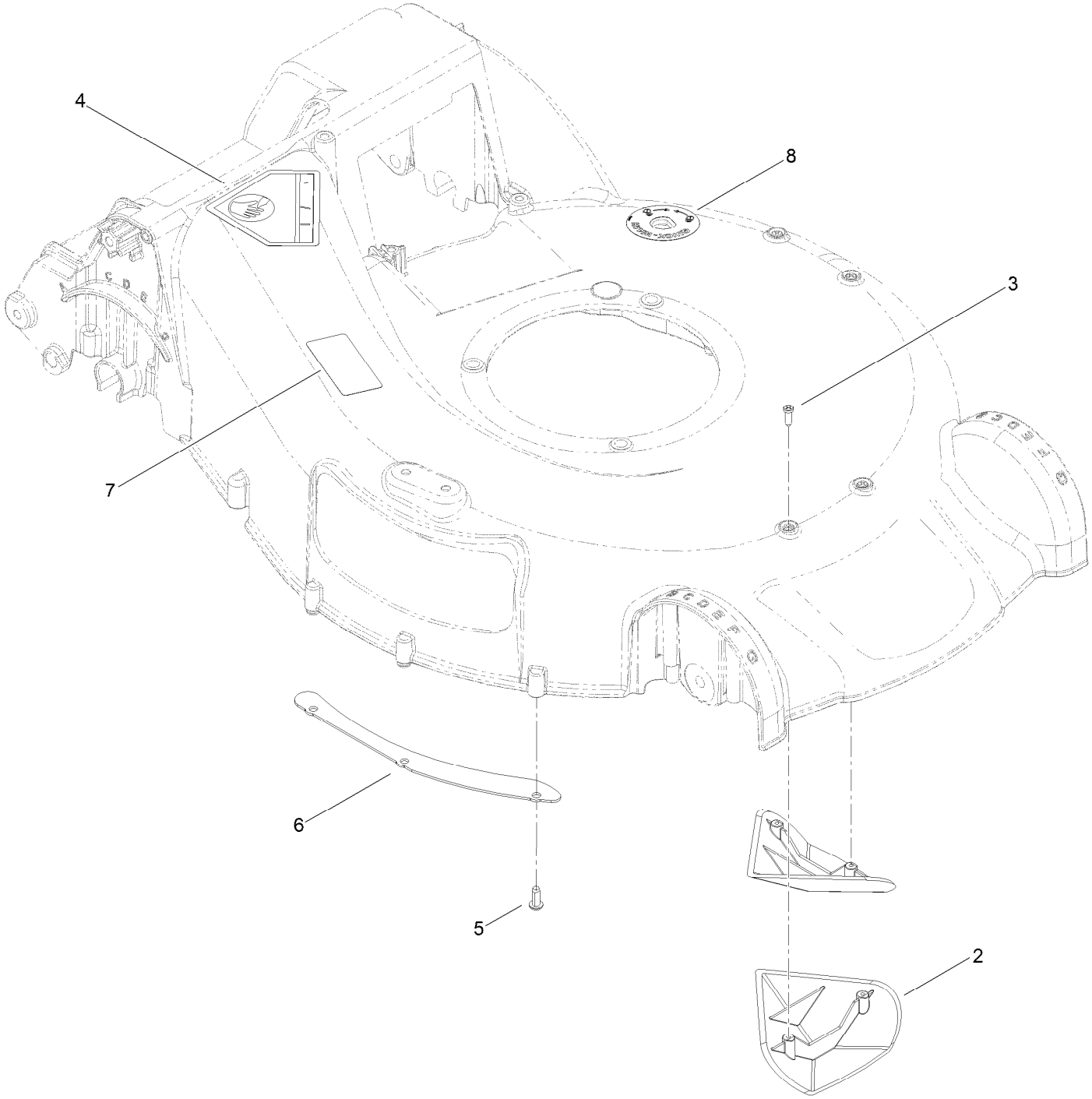

Housing Assembly No. 115-2854 (continued)

Ref.	Part Number	Qty.	Description
2	108-3798	2	Kicker-Housing
3	32144-111	4	Screw-PPH
4	94-8072	1	Decal-Danger
5	63-8590	3	Screw
6	105-1316-03	1	Sheet-Lip
7	125-5092	1	Decal-Placement, Foot
8	112-8867	1	Decal-Port, Washout

Rear Door and Mulch Plug Assembly

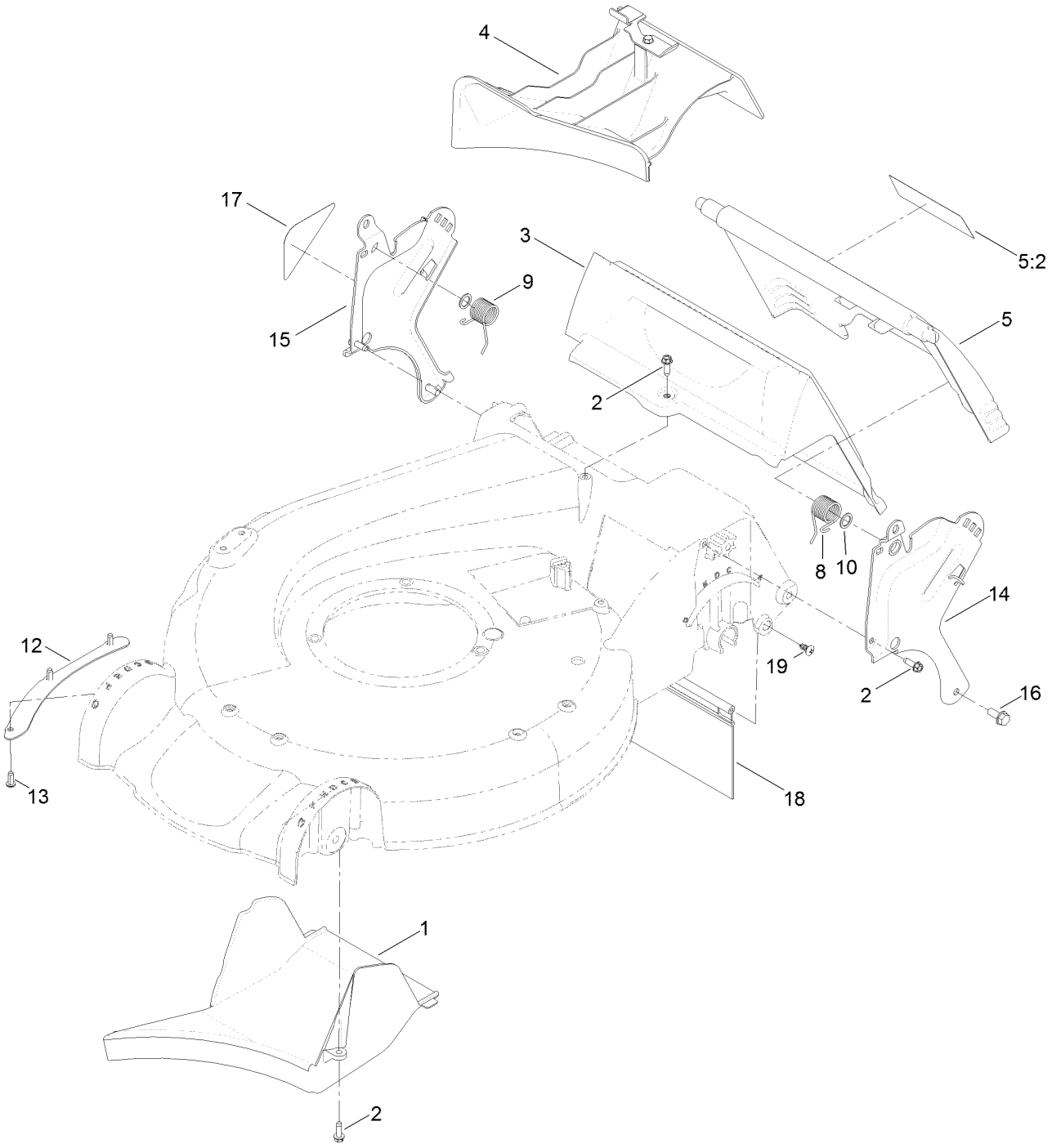

Rear Door and Mulch Plug Assembly (continued)

Ref.	Part Number	Qty.	Description
1	107-7495	1	Tunnel-Discharge
2	49-2040	5	Screw-HWHTF
3	114-2668	1	Chute
4	115-8413	1	Mulch Plug ASM
5	121-5776	1	Rear Door ASM
5:2	131-4514	1	Decal-Warning
8	115-2859	1	Spring-Torsion
9	114-7924	1	Spring-Torsion
10	94-8196	2	Washer-Nylon
12	105-1316-03	1	Sheet-Lip
13	63-8590	3	Screw
14	114-2671-03	1	Bracket-Handle, LH
15	114-2672-03	1	Bracket-Handle, RH
16	32144-11	2	Screw-HWHTF
17	115-2884	1	Decal-Instruction
18	120-7011	1	Shield-Trailing
19	117-1092	2	Screw-PTH

Bag Assembly

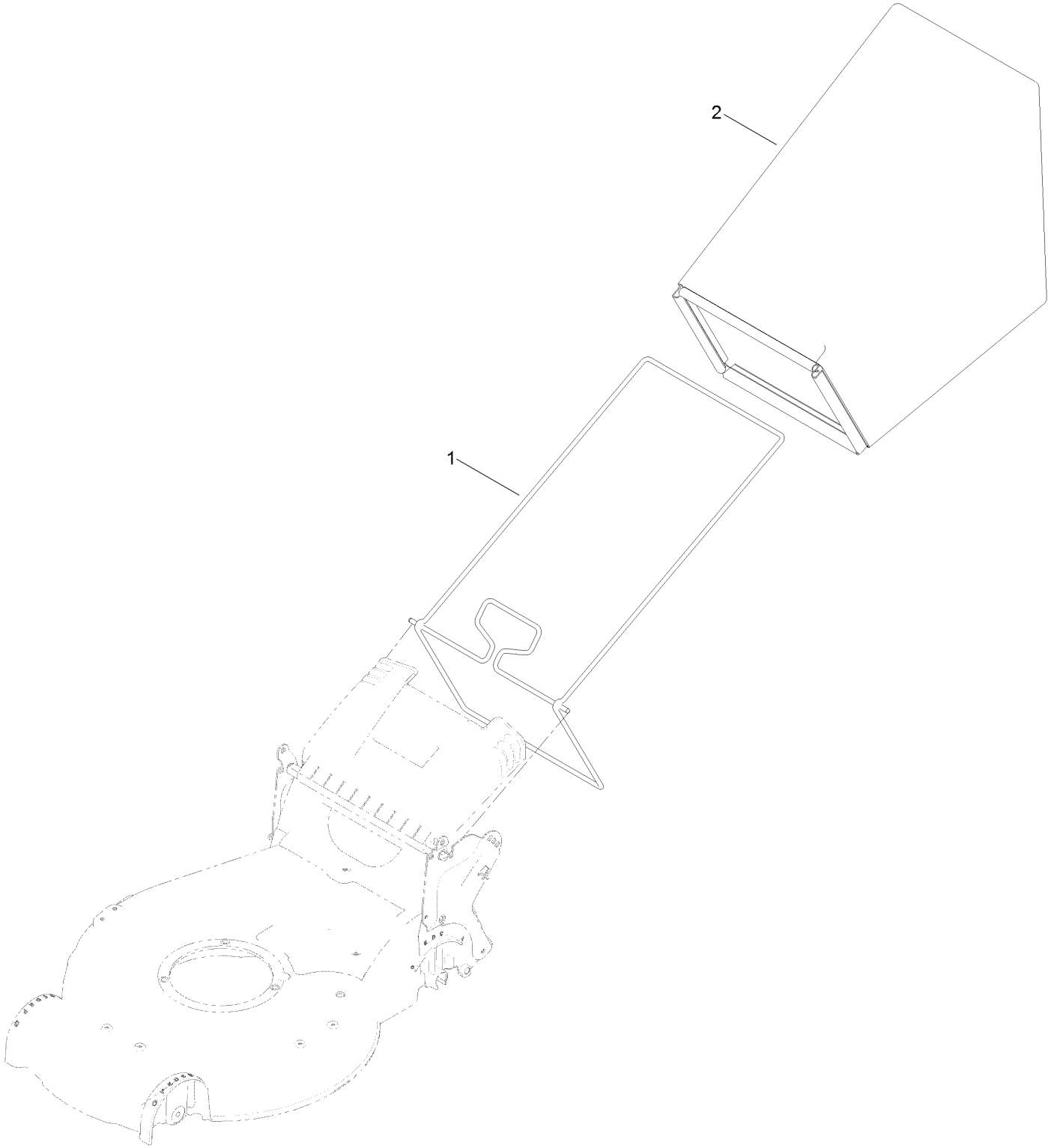

Bag Assembly (continued)

Ref.	Part Number	Qty.	Description
1	132-4529-03	1	Bag Frame ASM
2	114-2664	1	Grass Bag ASM

Engine and Blade Assembly

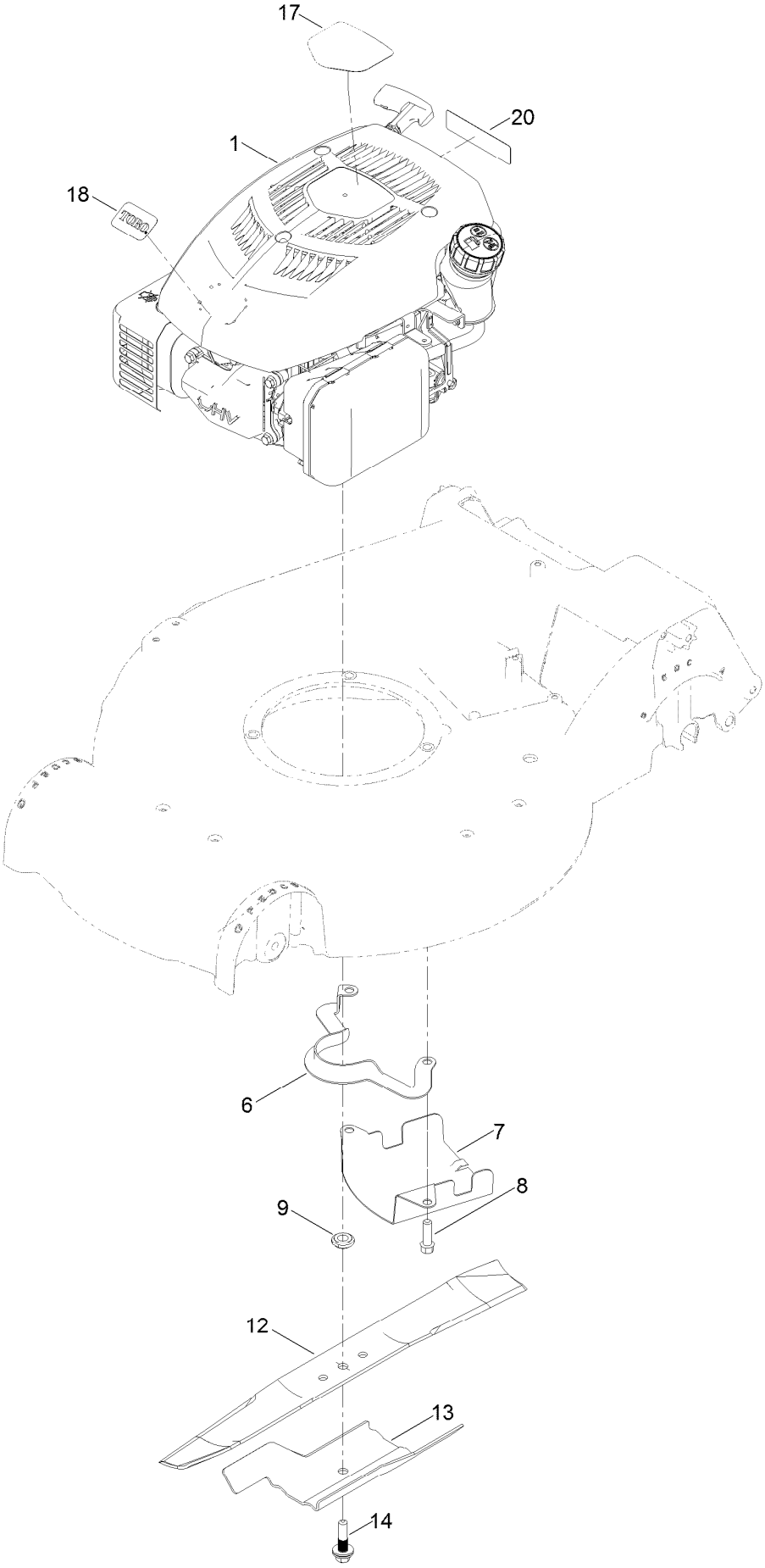

Engine and Blade Assembly (continued)

Ref.	Part Number	Qty.	Description
1	136-7856	1	Engine-1P65F-2
6	108-8110-03	1	Guide-Belt
7	107-7489-03	1	Shield-Grass
8	95-1727	3	Screw-Taptite
9	106-3999	1	Spacer-Driver
12	133-8183-03	1	Blade-21In, Recycling, STD
13	105-6848-03	1	Accelerator-Blade
14	125-2466	1	Bolt-Blade
17	136-9054	1	Decal-Shroud
18	136-5863	1	Decal
20	117-2718	1	Decal-Arrester, Spark

Fuel System and Carburetor Assembly

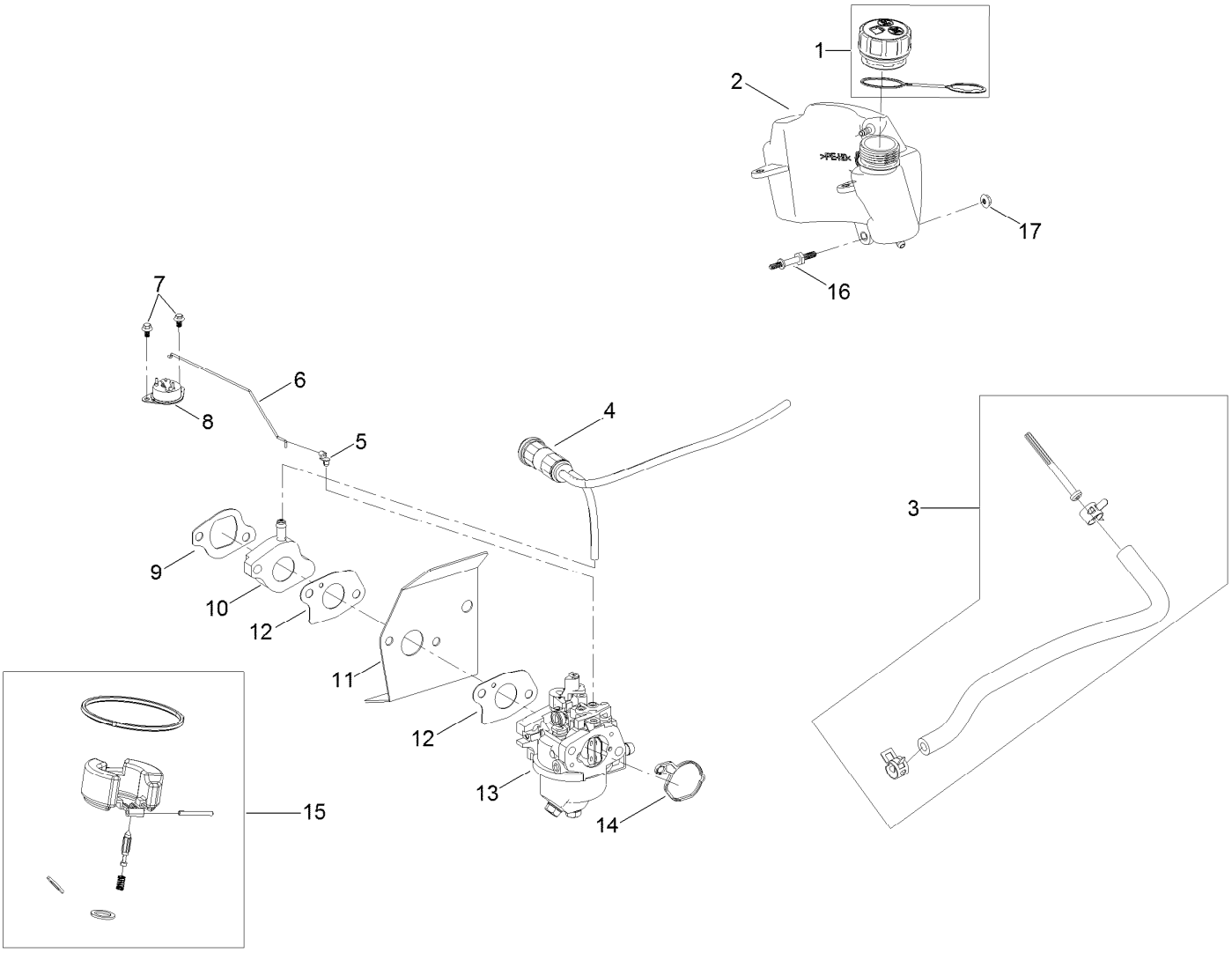

Fuel System and Carburetor Assembly (continued)

Ref.	Part Number	Qty.	Description
1	136-7875	1	Cap-Fuel, Sealed
2	133-9888	1	Tank-Fuel
3	121-4167	1	Fuel Line Kit
4	133-9874	1	Canister-Carbon, 19 Cc
5	120-4451	1	Lock-Throttle
6	133-9909	1	Linkage-Choke, Thermal
7	133-9908	2	Screw-HWHTF
8	133-9907	1	Control-Thermal
9	121-4183	1	Gasket-Intake
10	133-9902	1	Spacer-Carburetor
11	133-9901	1	Insulator-Carburetor
12	121-4184	2	Gasket-Carburetor
13	133-9900	1	Carburetor
14	133-9899	1	Gasket-Carburetor
15	127-9395	1	Internal Carb Service Kit
16	121-0016	1	Bolt-Stud
17	120-4236	1	Nut-Flange
99	133-9943	1	High Altitude Kit ●

● Not illustrated

Air Intake and Filtration Assembly

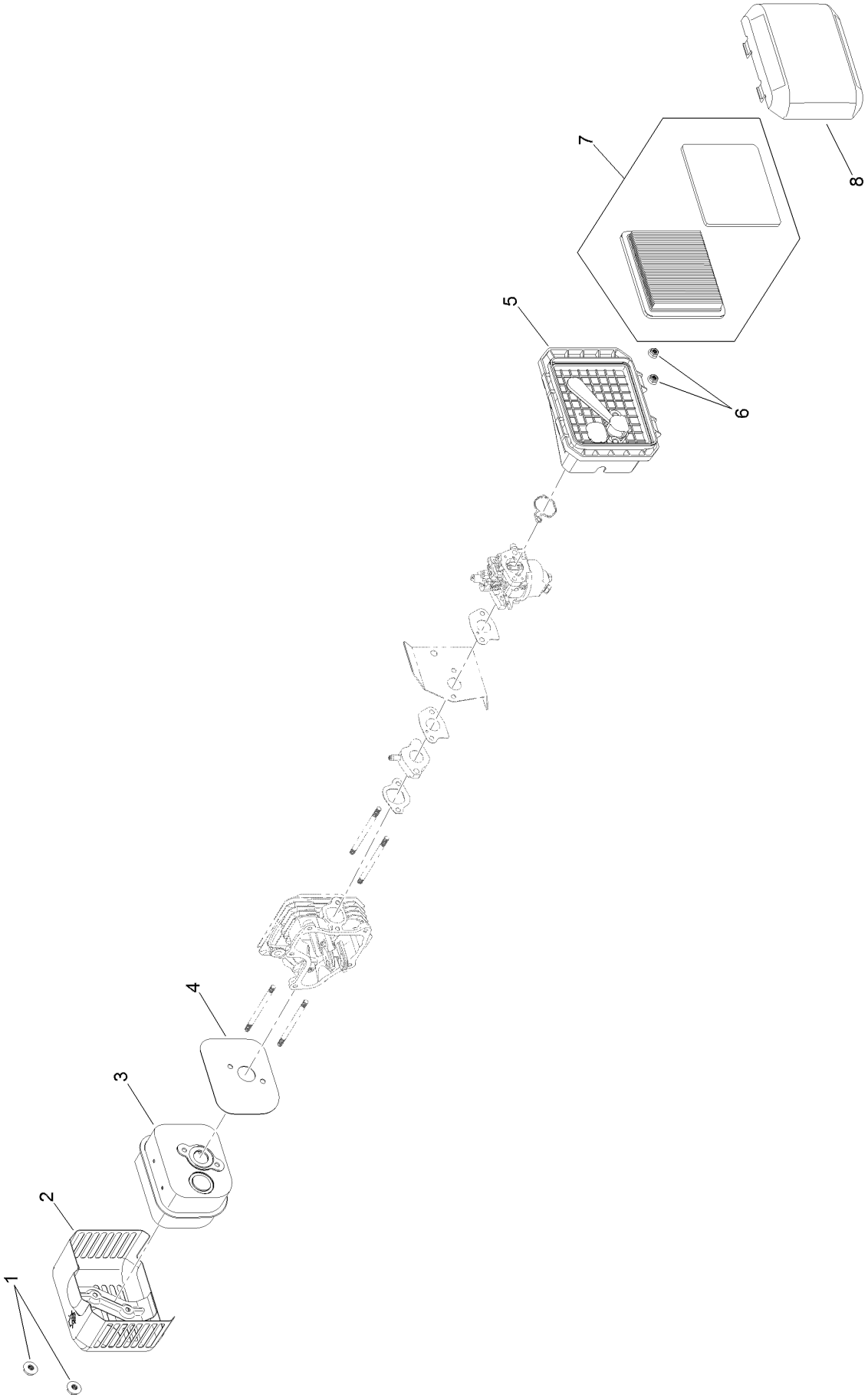

Air Intake and Filtration Assembly (continued)

Ref.	Part Number	Qty.	Description
1	121-0010	2	Nut-Flange
2	133-9906	1	Shield-Muffler
3	121-0166	1	Muffler ASM
4	121-0034	1	Gasket-Exhaust
5	133-9928	1	Air Cleaner Base
6	120-4236	2	Nut-Flange
7	119-1909	1	Air Filter And Prefilter Kit
8	121-0364	1	Cover-Cleaner, Air

Ignition and Electrical Assembly

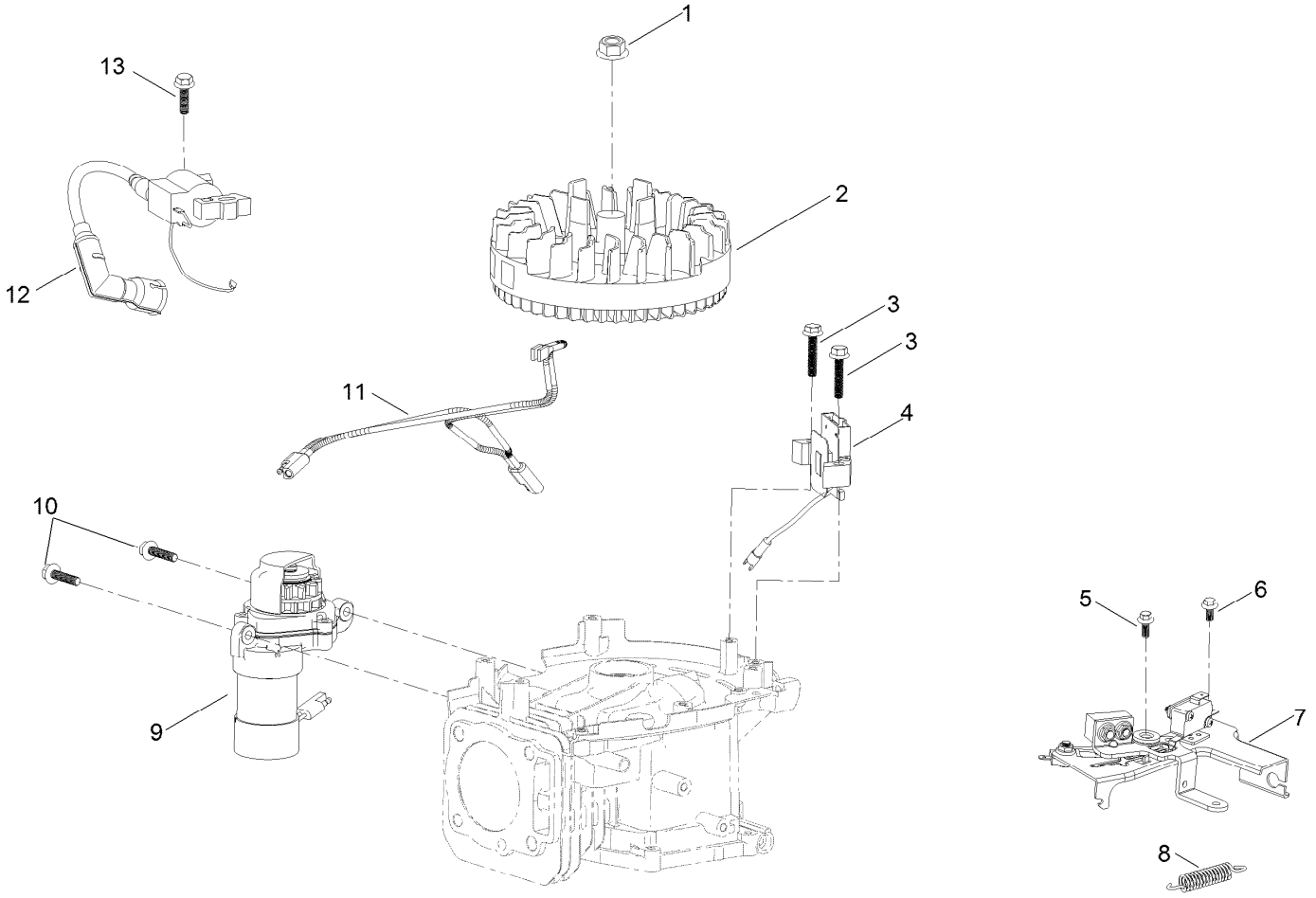

Ignition and Electrical Assembly (continued)

Ref.	Part Number	Qty.	Description
1	121-0047	1	Nut-Flange
2	133-9917	1	Flywheel
3	120-4223	2	Screw-HHF
4	136-7861	1	Alternator
5	121-0007	1	Bolt-Flange
6	120-4232	1	Screw-HHF
7	136-7873	1	Brake ASM
8	133-9890	1	Spring-Brake
9	136-7862	1	Motor-Starter
10	120-4225	2	Screw-HHF
11	133-9921	1	Harness-Motor, Starter
12	136-7870	1	Ignition Coil ASM
13	120-4225	1	Screw-HHF

Crankcase Assembly

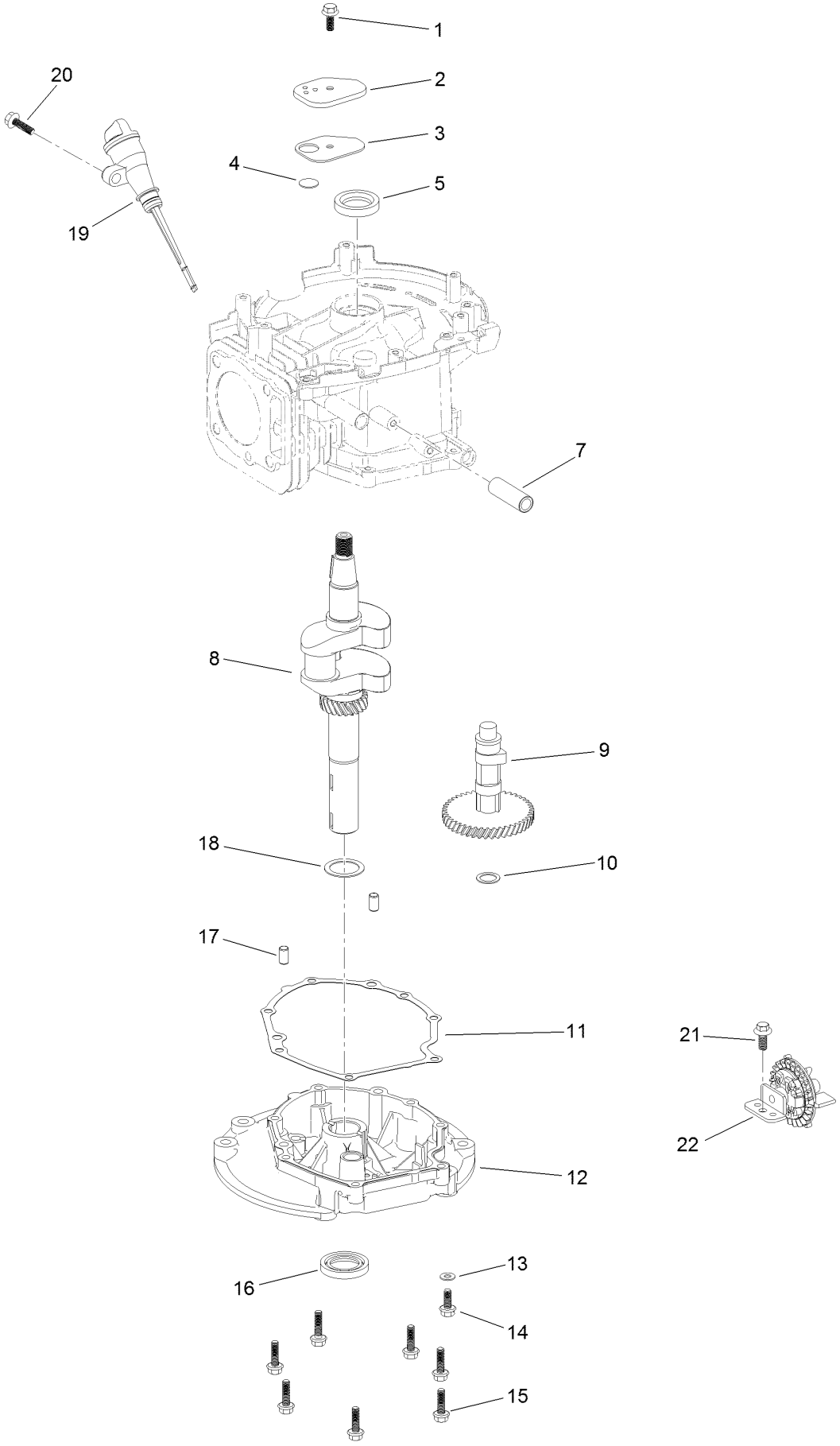

Crankcase Assembly (continued)

Ref.	Part Number	Qty.	Description
1	120-4216	1	Screw-HHF
2	133-9882	1	Cover-Breather
3	133-9883	1	Gasket-Cover, Breather
4	133-9884	1	Valve-Breather
5	121-0019	1	Seal-Oil
7	133-9911	1	Tube-Breather
8	133-9894	1	Crankshaft ASM
9	121-4174	1	Camshaft ASM
10	121-0051	1	Washer-Flat
11	133-9895	1	Gasket-Cover, Case
12	133-9897	1	Cover-Crankcase
13	121-0048	1	Washer-Plain
14	121-0030	1	Screw-HHF
15	120-4223	7	Screw-HHF
16	121-0022	1	Seal-Oil
17	121-0054	2	Pin-Dowel
18	136-7863	1	Washer-Flat
19	133-9886	1	Dipstick And Fill Tube Kit
20	121-0007	1	Bolt-Flange
21	121-0369	1	Screw-HWH, Thd Form
22	136-7864	1	Governor Gear ASM

Governor Assembly

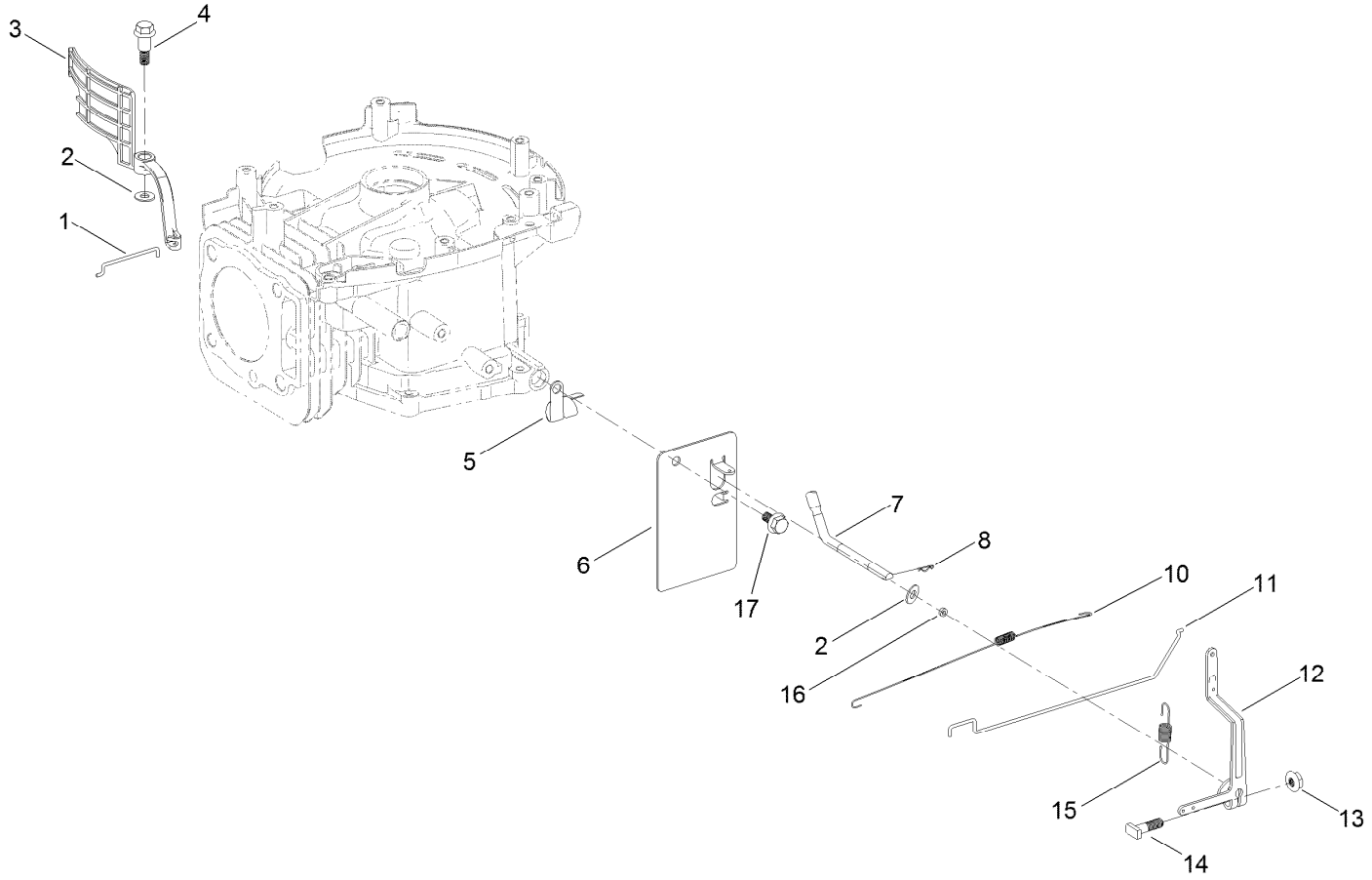

Governor Assembly (continued)

Ref.	Part Number	Qty.	Description
1	133-9880	1	Linkage-Choke
2	136-7866	2	Washer-Flat
3	133-9879	1	Air Vane-Autochoke
4	127-9196	1	Screw-Shoulder, HWH
5	121-0017	1	Clip-Harness, Wire
6	133-9891	1	Plate-Control, Throttle
7	136-7865	1	Arm-Governor
8	120-4256	1	Pin-Hair

Ref.	Part Number	Qty.	Description
10	121-0023	1	Spring-Return, Throttle
11	133-9892	1	Rod-Governor
12	121-0028	1	Arm-Governor
13	120-4236	1	Nut-Flange
14	120-4238	1	Bolt-Arm, Governor
15	133-9893	1	Spring-Governor
16	121-0021	1	Seal-Oil
17	120-4216	1	Screw-HHF

Piston and Cylinder Head Assembly

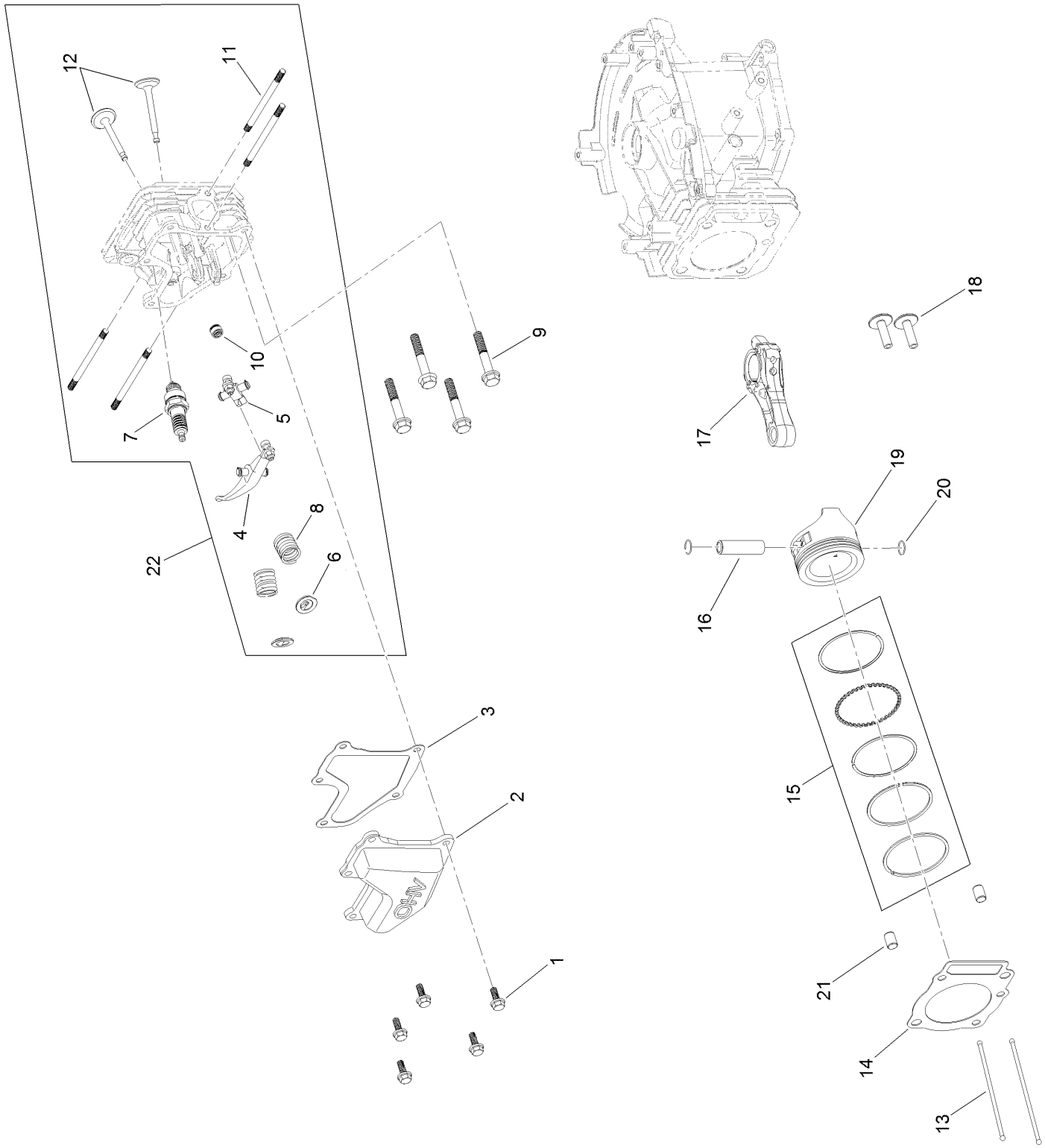

Piston and Cylinder Head Assembly (continued)

Ref.	Part Number	Qty.	Description
1	120-4232	5	Screw-HHF
2	133-9905	1	Cover-Valve
3	133-9904	1	Gasket-Cover, Valve
4	136-7868	1	Exhaust Rocker Arm ASM
5	136-7869	1	Intake Rocker Arm ASM
6	120-4474	2	Retainer-Valve, Spring
7	121-0187	1	Spark Plug
8	120-4473	2	Spring-Valve
9	121-0043	4	Bolt-Flange
10	121-4202	1	Seal-Stem, Valve
11	121-0045	4	Stud-Exhaust
12	121-4192	1	Valve Set
13	121-4193	2	Rod-Push
14	133-9910	1	Gasket-Head
15	121-4171	1	Piston Ring Set
16	120-4467	1	Pin-Piston
17	120-4469	1	Connecting Rod ASM
18	120-4477	2	Tappet-Valve
19	121-4173	1	Piston
20	121-0052	2	Clip-Pin, Wrist
21	121-0053	2	Pin-Dowel
22	136-7890	1	Complete Head ASM

Blower Housing Assembly

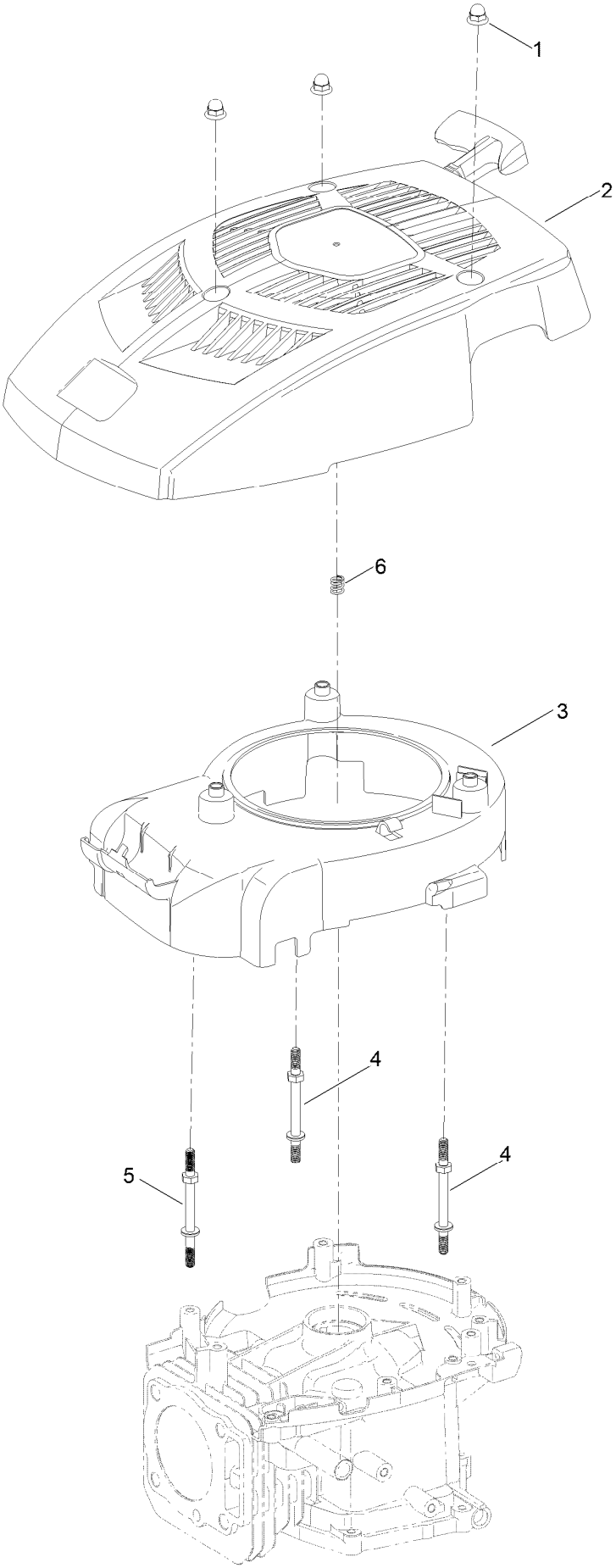

Blower Housing Assembly (continued)

Ref.	Part Number	Qty.	Description
1	127-9115	3	Nut-Acorn
2	133-9857	1	Recoil Shroud ASM
2	133-9922	1	Recoil Shroud ASM
3	136-7867	1	Shroud-Fan
4	133-9877	2	Stud-Shroud
5	133-9878	1	Stud-Shroud
6	136-7770	1	Spring-Compression, Recoil

Front Wheel and Height-of-Cut Assembly

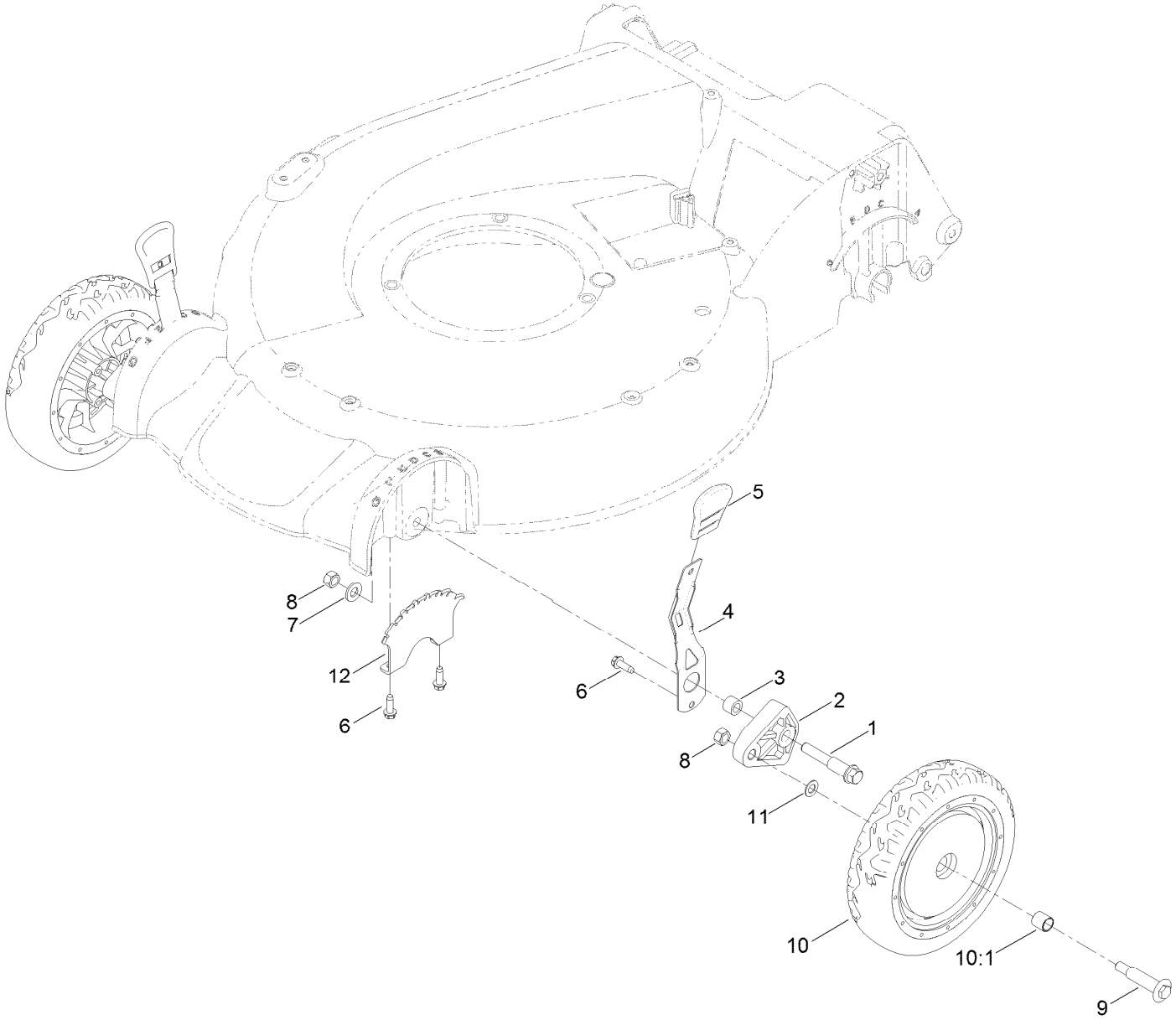

Front Wheel and Height-of-Cut Assembly (continued)

Ref.	Part Number	Qty.	Description
1	114-3467	2	Screw-Shoulder
2	107-7492	2	Arm-Pivot
3	52-2480	2	Spacer-Wheel
4	107-7491	2	Arm-Spring
5	110-0549	2	Knob-HOC
6	49-2040	6	Screw-HWHTF
7	3256-24	2	Washer-Flat
8	125-5069	4	Nut-Hex
9	92-1057	2	Bolt-Shoulder
10	107-3708	2	Wheel ASM
10:1	27-6250	2	Bushing
11	40-1940	2	Washer
12	107-7478	2	Plate-HOC

Rear Wheel and Height-of-Cut Assembly

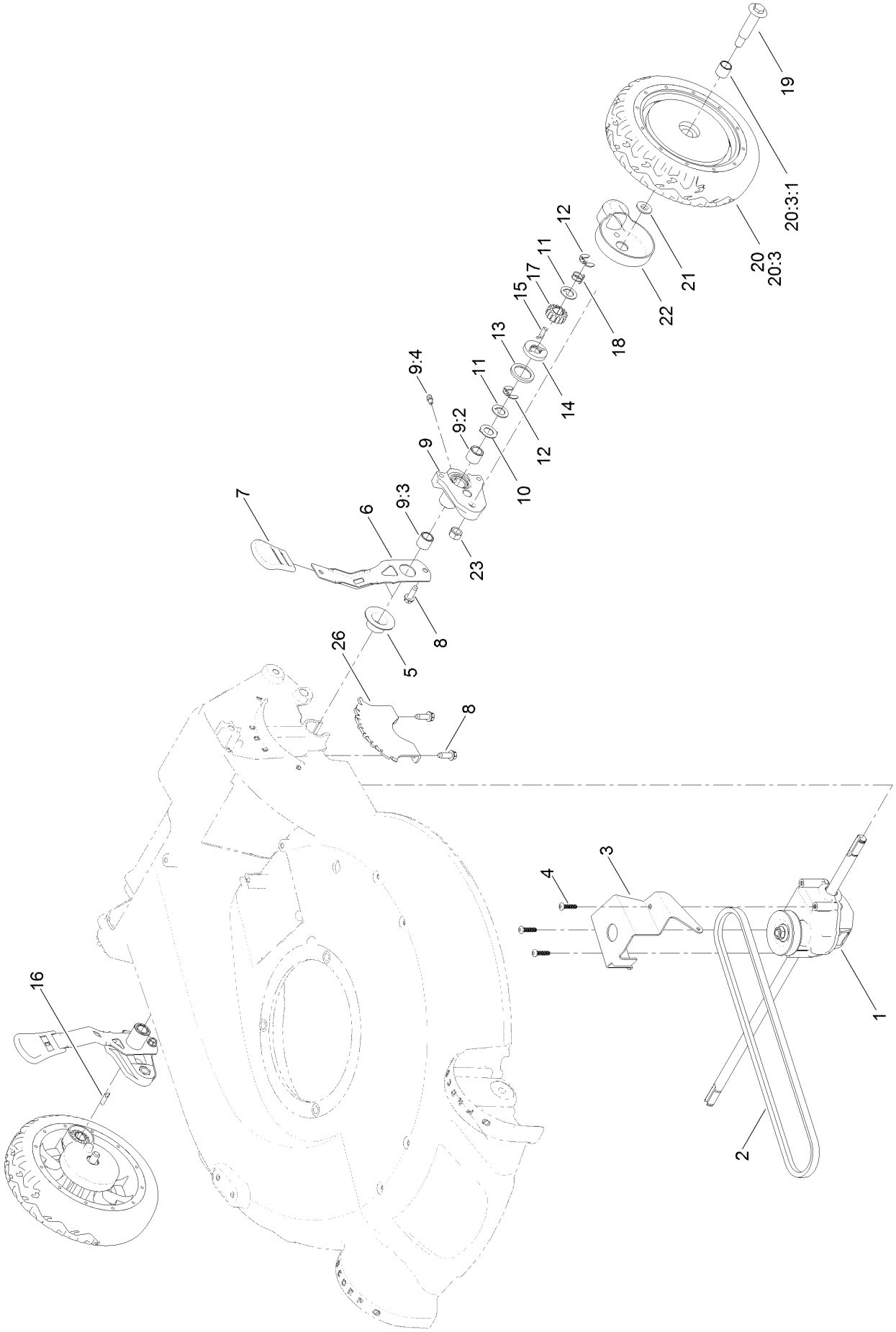

Rear Wheel and Height-of-Cut Assembly (continued)

Ref.	Part Number	Qty.	Description
1	121-9184	1	Transmission ASM
2	115-4669	1	Belt-V
3	114-7977-03	1	Bracket-Transmission
4	108-7476	3	Screw-Plastite
5	42-3520	2	Cap-End
6	107-7491	2	Arm-Spring
7	110-0549	2	Knob-HOC
8	49-2040	6	Screw-HWHTF
9	100-8774	2	Pivot Arm ASM
9:2	47-2900	1	Bushing
9:3	70-9760	1	Bushing
9:4	302-56	1	Fitting-Grease
10	65-4730	2	Washer-Arm, Pivot
11	65-4740	4	Washer-Thrust, Keyed
12	65-2720	4	Ring-Clip, Locking
13	65-4710	2	Ring-Friction
14	65-4760	2	Washer-Clutch
15	66-6050	1	Key-Rocking, LH
16	66-6040	1	Key-Rocking, RH
17	65-4750	2	Gear-Pinion
18	65-4720	2	Spring-Compression
19	92-1057	2	Bolt-Shoulder
20	107-3709	2	Wheel Gear ASM
20:3		1	Wheel ASM ●
20:3:1	27-6250	2	Bushing
21	74-1671	2	Spacer-Cover, Wheel
22	74-1660	2	Cover-Wheel
23	125-5069	2	Nut-Hex
26	107-7478	2	Plate-HOC

● Not serviced separately

Handle Assembly

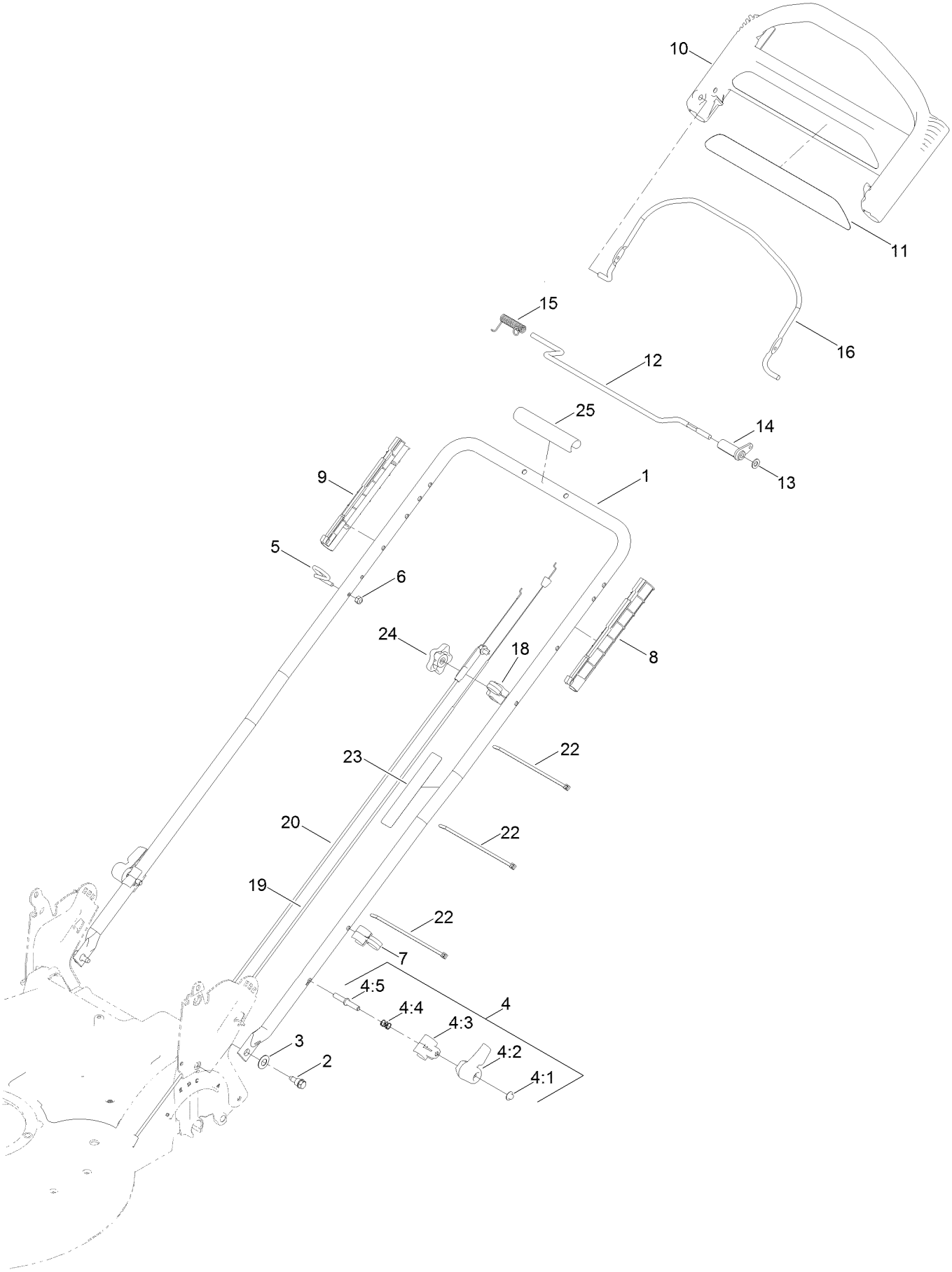

Handle Assembly (continued)

Ref.	Part Number	Qty.	Description
1	132-4460-05	1	Handle
2	115-1958	2	Bolt-Shoulder
3	112-9972	2	Washer-Spring, Conical
4	115-2860	2	Quick Release ASM
4:1	109-0917	1	Nut-Push
4:2	114-7995	1	Lever
4:3	114-7996	1	Anchor-Spring
4:4	115-2858	1	Spring-Compression
4:5	114-2675	1	Rod-Release
5	86-9671	1	Guide-Rope
6	3296-73	1	Nut-Lock, NI
7	114-7988	1	Guide-Cable
8	105-6842	1	Guide-LH
9	105-6841	1	Guide-RH

Ref.	Part Number	Qty.	Description
10	104-8678	1	Handle-Control
11	117-1019	1	Decal
12	136-7150	1	Bar-Control, Traction
13	3256-23	1	Washer-Plain
14	99-1589	1	Lever-Traction
15	121-9118	1	Spring-Torsion
16	131-0880-03	1	Bail-Brake
18	136-5864	1	Anchor-Cable
19	108-8158	1	Cable-Traction
20	117-5900	1	Cable-Brake
22	614249	3	Tie-Cable
23	132-4470	1	Decal-Traction, Adjust
24	131-0897	1	Knob-Handle, Locking
25	131-4551	1	Handle-Cover

Electrical Assembly

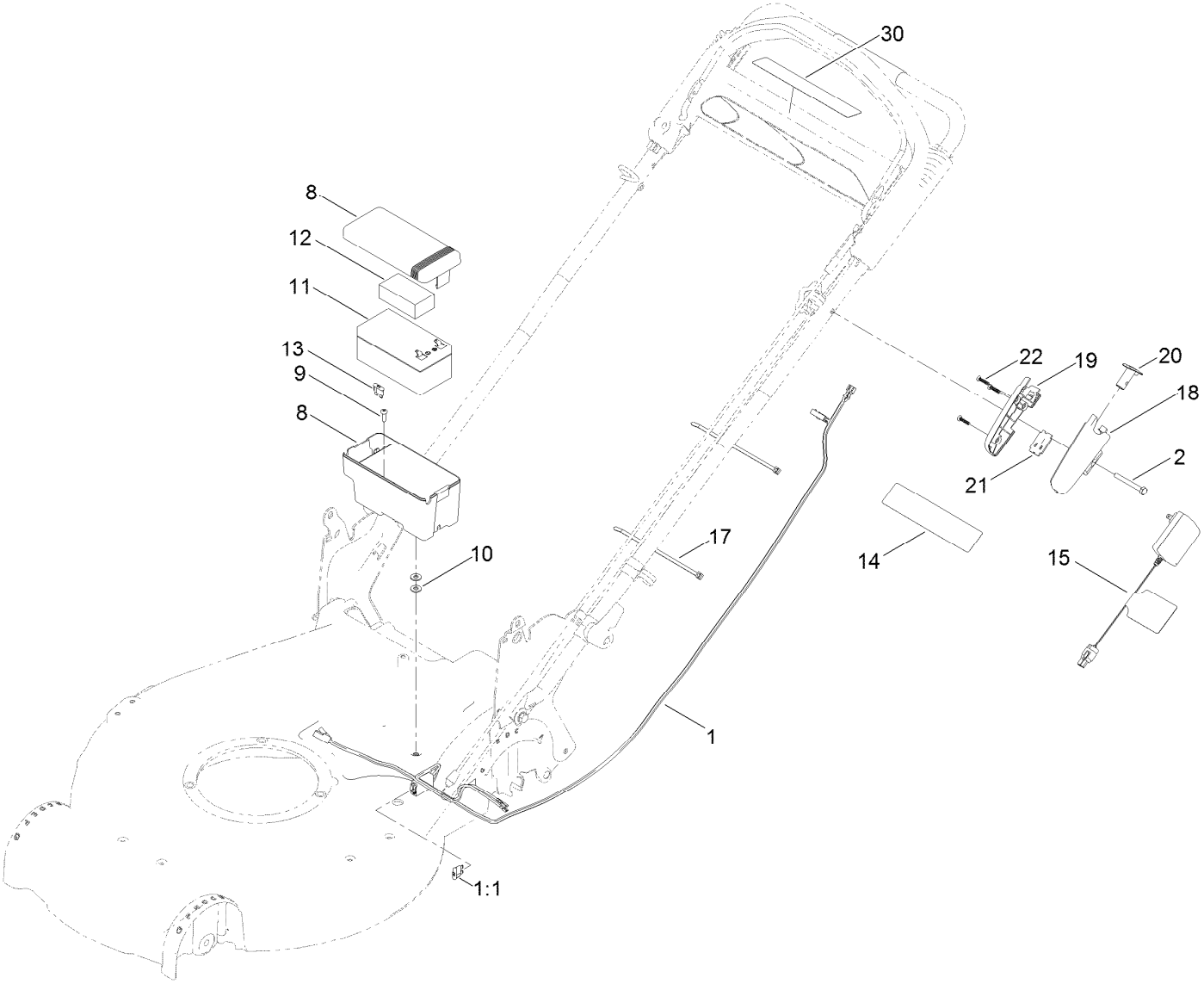

Electrical Assembly (continued)

Ref.	Part Number	Qty.	Description
1	125-5025	1	Harness-Wire
1:1	99-6124	1	Fuse-40 Amp
2	321-50	1	Screw-HH
8	108-4844	1	Battery Box ASM
9	32144-32	1	Screw
10	3256-22	2	Washer-Flat
11	106-8397	1	Battery-Wet
12	107-3774	1	Foam-Battery, Top
13	99-6124	1	Fuse-40 Amp

Ref.	Part Number	Qty.	Description
14	104-7953	1	Decal-Warning
15	136-9126	1	Charger, Battery (12V)
17	614249	3	Tie-Cable
18	133-8160	1	Housing-Switch, LH
19	133-8161	1	Housing-Switch, RH
20	125-2470	1	Button-Switch
21	121-9173	1	Switch-Push Button
22	94-4496	3	Screw-PPH
30	133-1900	1	Decal-Button, Push

Attachments and Accessories

For 20384 Super Recycler Lawn Mower

Product Name	Model/Part
Bagging Blade	108-3759-03
All Season Synthetic Oil	117-0066
Fuel Stabilizer .05 oz	130-2393
4-cycle Fuel, Snow And Lawn, 32oz Can	131-3823
Traction Assist Handle Kit	131-4590
Toro Premium Fuel Treatment 12 Oz Bottle	131-6572
High Altitude Kit	133-9943
Engine Maintenance Kit	20240
Lawn Striping Kit with 22in Roller	20601
Toro 4-cycle Sae 30 Oil (32oz Bottle)	38903
Summer Oil-Case of 24 (20oz Bottles)	38916
Bag-Walk Behind (Toro)	490-7318
Lawnmower Cover	490-7462
Bagger Kit	59165

Notes:

Notes:

Notes:

TORO®

Count on it.