FORM NO. 3321 – 497

TORO®

MODEL NO. 51307 – 8900001 & UP

PARTS CATALOG

13” ELECTRIC TRIMMER

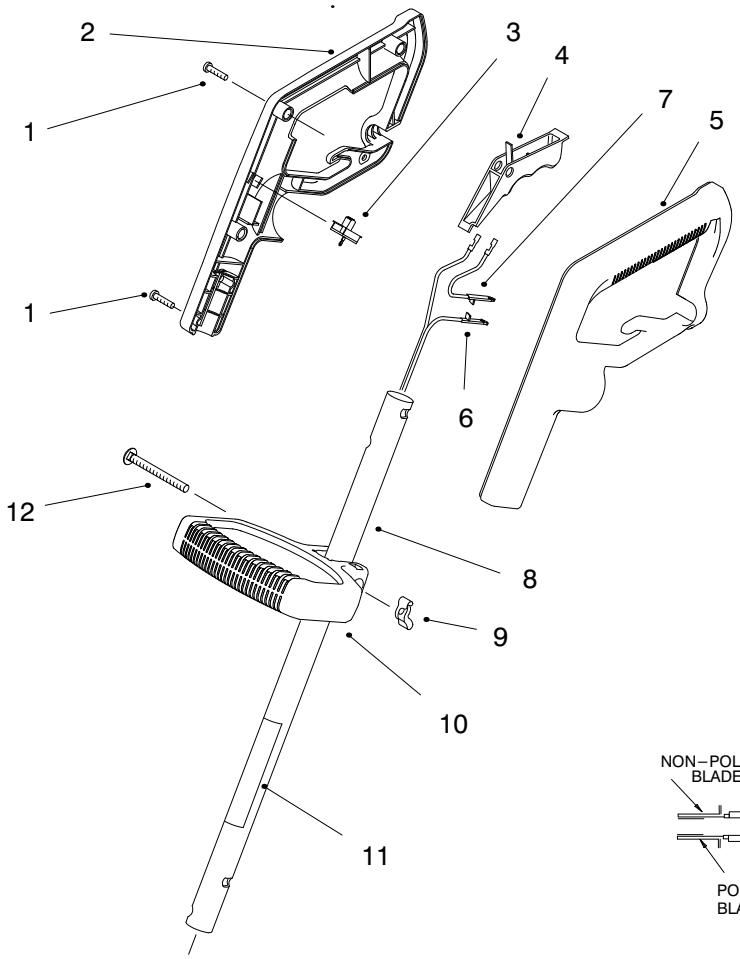

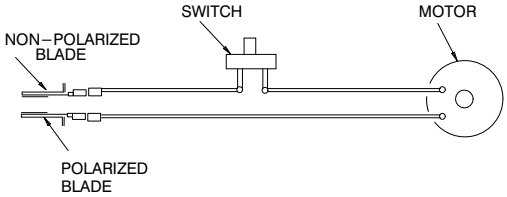

HANDLE ASSEMBLY

Ref. No.	Part No.	Description	No. Used
1	94–4496	Screw	6
2	98–1839	Grip – Hand R.H.	1
3	73–5600	Switch – Single Speed	1
4	73–8170	Trigger	1
5	98–1840	Grip – Hand L.H.	1
6	98–1849	Harness – Wire	1
7	98–1837	ASM–Wire	1
8	98–7183	Tube Assembly (Incl. Ref. #11)	1
9	32103–30	Nut – Wing	1
10	73–8310	Handle – Mid	1
11	98–7184	Decal – Safety	1
12	73–8740	Screw – Carriage	1

© The TORO Company – 1998
All Rights Reserved

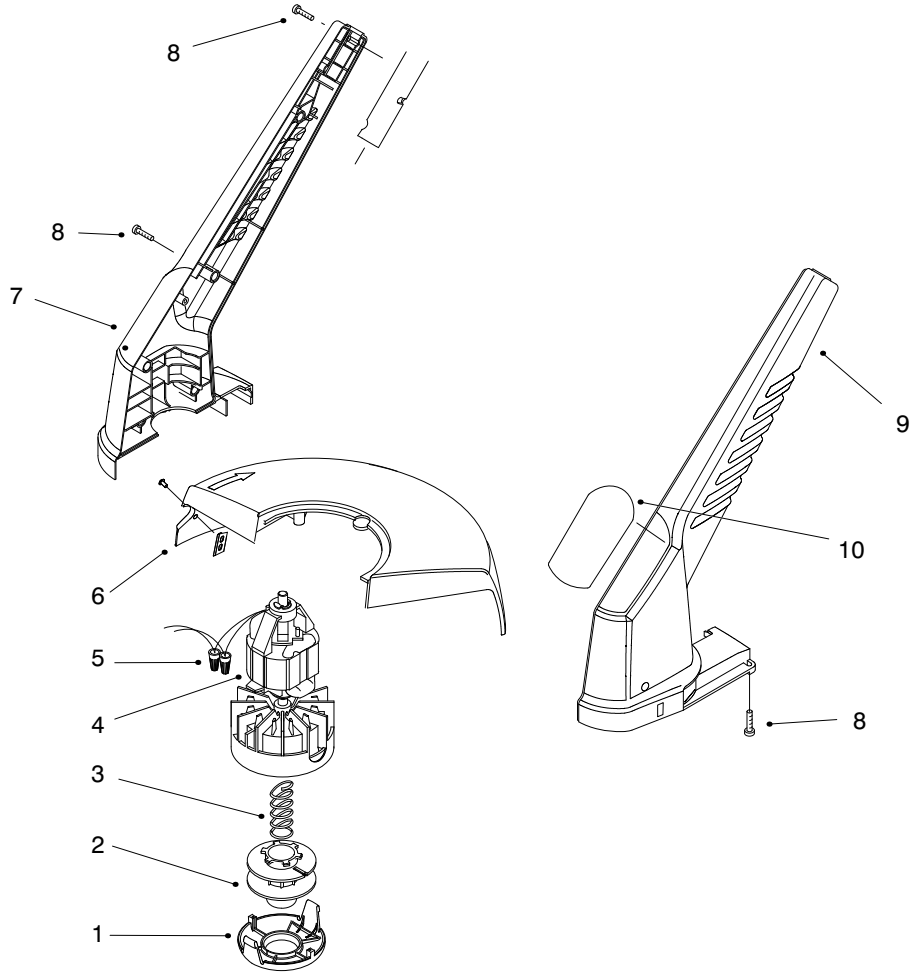

MOTOR & HOUSING ASSEMBLY

Ref. No.	Part No.	Description	No. Used
1	73−8200	Cap	1
2	73−8190	Spool	1
3	73−8220	Spring	1
4	73−9052	Motor Assembly	1
5	73−6570	Connector − Wire Nut	2
6	73−9092	ASM−Shield	1
7	98−1841	Housing R.H.	1
8	94−4496	Screw − Pan Hd.	8

Ref. No.	Part No.	Description	No. Used
9	98−1842	Housing L.H.	1
10	98−3306	Decal − 13” Trimmer	1
*	88175	Spool & Line Assembly (Incl. Ref. #2 and 30 ft. of .065 line)	1
	88026	Spring and Spool Cap (Incl. Ref. #1 and 3)	1

*Not Illustrated