Form No. 3418-784 Rev A

TORO®

Count on it.

Parts Catalog

22in Recycler®

Lawn Mower with SmartStow®

Model No. 20339—Serial No. 402000000 and Up

Register at www.Toro.com.
Original Instructions (EN)

3418-784 A

Ordering Replacement Parts

To order replacement parts, please supply the part number, the quantity, and the description of each part desired.

Understanding Reference Numbers

Each identified part in an illustration has a reference number. The reference number for a part also appears in the parts list, along with other information about the part.

This catalog uses two special reference number formats, one to indicate parts in a service assembly and another to indicate the quantity of a given part in an illustration.

Service Assembly Reference Numbers

Parts in service assemblies have reference numbers in the form a:b. The a represents the reference number of the entire service assembly and the b represents a sequential number unique to each part within the service assembly.

For example, a wheel assembly might be identified by reference number 6, the tire by 6:1, the valve by 6:2, and the wheel by 6:3. When you order the assembly identified by reference number 6, you receive all parts identified by reference numbers 6:1,6:2, and 6:3. However, you may also order any part individually. Reference numbers of this type appear in illustration and in parts lists.

Reference Numbers Indicating Quantity

In an illustration, if a reference number indicates more than one part, the reference number has the form nX y. The n represents the quantity of the part, the X is the multiplication symbol, and the y represents the reference number.

For example, in an illustration, the reference number 2X 37 means that two of the parts identified by reference number 37 are indicated.

Contents

Housing Assembly 4
Rear Bag Assembly 6
Engine and Blade Assembly 8
Front Wheel Height-of-Cut Assembly 10
Rear Wheel Height-of-Cut Assembly 12
Handle and Control Assembly 14
Attachments and Accessories 16

© 2017—The Toro® Company
8111 Lyndale Avenue South
Bloomington, MN 55420

Contact us at www.Toro.com.
Printed in the USA.
All Rights Reserved

Housing Assembly

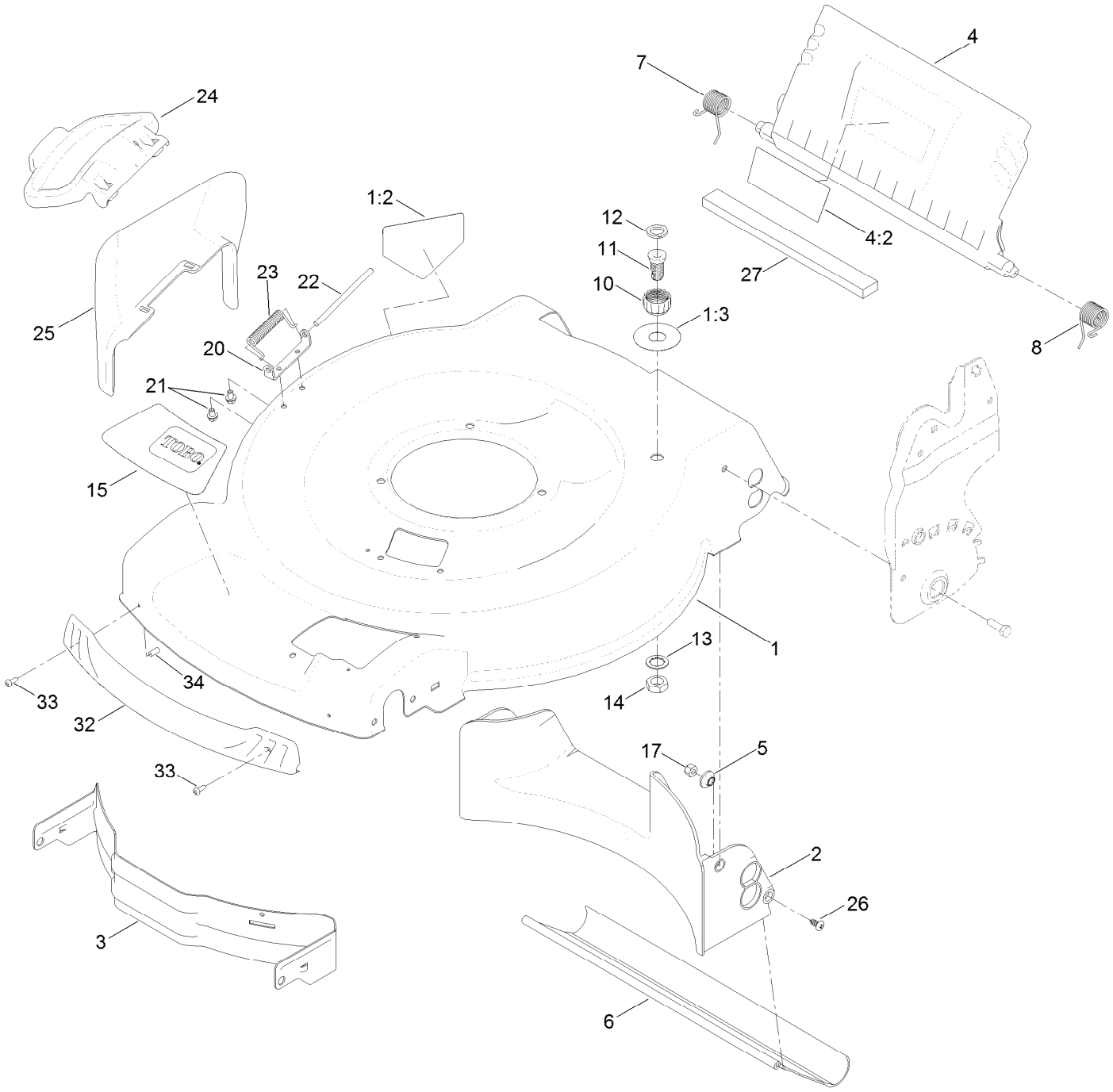

Housing Assembly (continued)

Ref.	Part Number	Qty.	Description
1	136-7052	1	Housing ASM
1:2	94-8072	1	Decal-Danger
1:3	112-8867	1	Decal-Port, Washout
2	120-5218	1	Baffle-Rear
3	114-7963-01	1	Baffle-Front
4	136-7003	1	Rear Deflector ASM
4:2	131-4514	1	Decal-Warning
5	117-5991	2	Washer-Stepped, Baffle
6	115-8420	1	Shield-Trailing
7	114-7924	1	Spring-Torsion
8	115-2859	1	Spring-Torsion
10	112-6401	1	Coupling-Hose, Washout Port
11	112-6400	1	Port-Washout
12	112-6438	1	Washer-Seal, Washout Port
13	3254-5	1	Washer-Tooth, Internal
14	3218-6	1	Nut-Jam
15	130-2398	1	Decal-Deck
17	3296-29	2	Nut-Lock, NI
20	112-6416	1	Bracket-Cover
21	99-8445	2	Screw-HWH
22	99-5291	1	Rod-Cover
23	99-5293	1	Spring-Torsion
24	115-8449	1	Deflector-Side
25	115-8447	1	Chute-Discharge, Side
26	117-1092	2	Screw-PTH
27	117-5924	1	Foam-Seal
32	114-7987	1	Bumper
33	105-6849	2	Screw-Forming, Thread
34	130-6660	2	Cap-Plug

Rear Bag Assembly

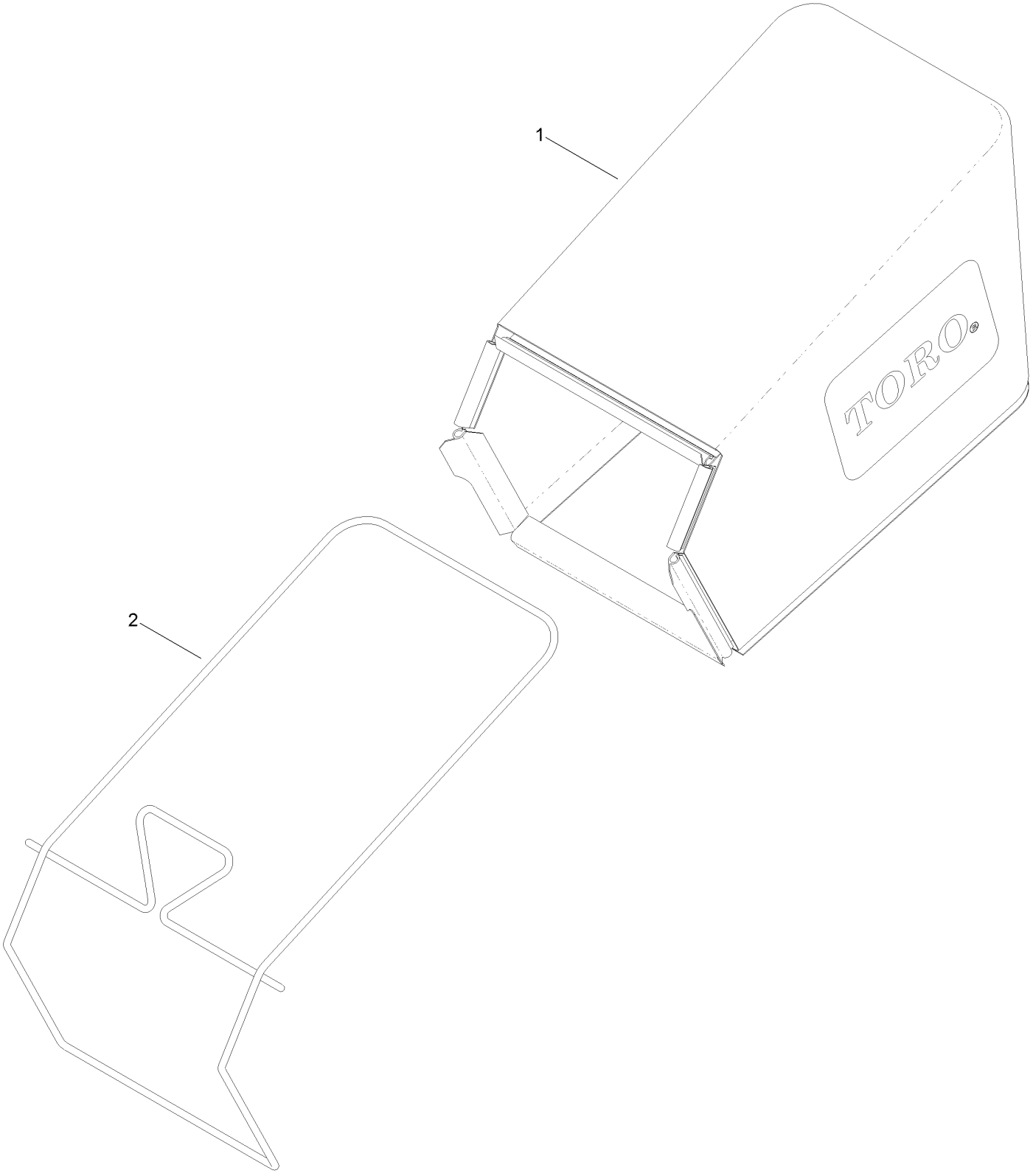

Rear Bag Assembly (continued)

Ref.	*Part Number*	*Qty.*	*Description*
1	115-4664	1	Grass Bag ASM
2	132-4483-03	1	Frame-Bag

Engine and Blade Assembly

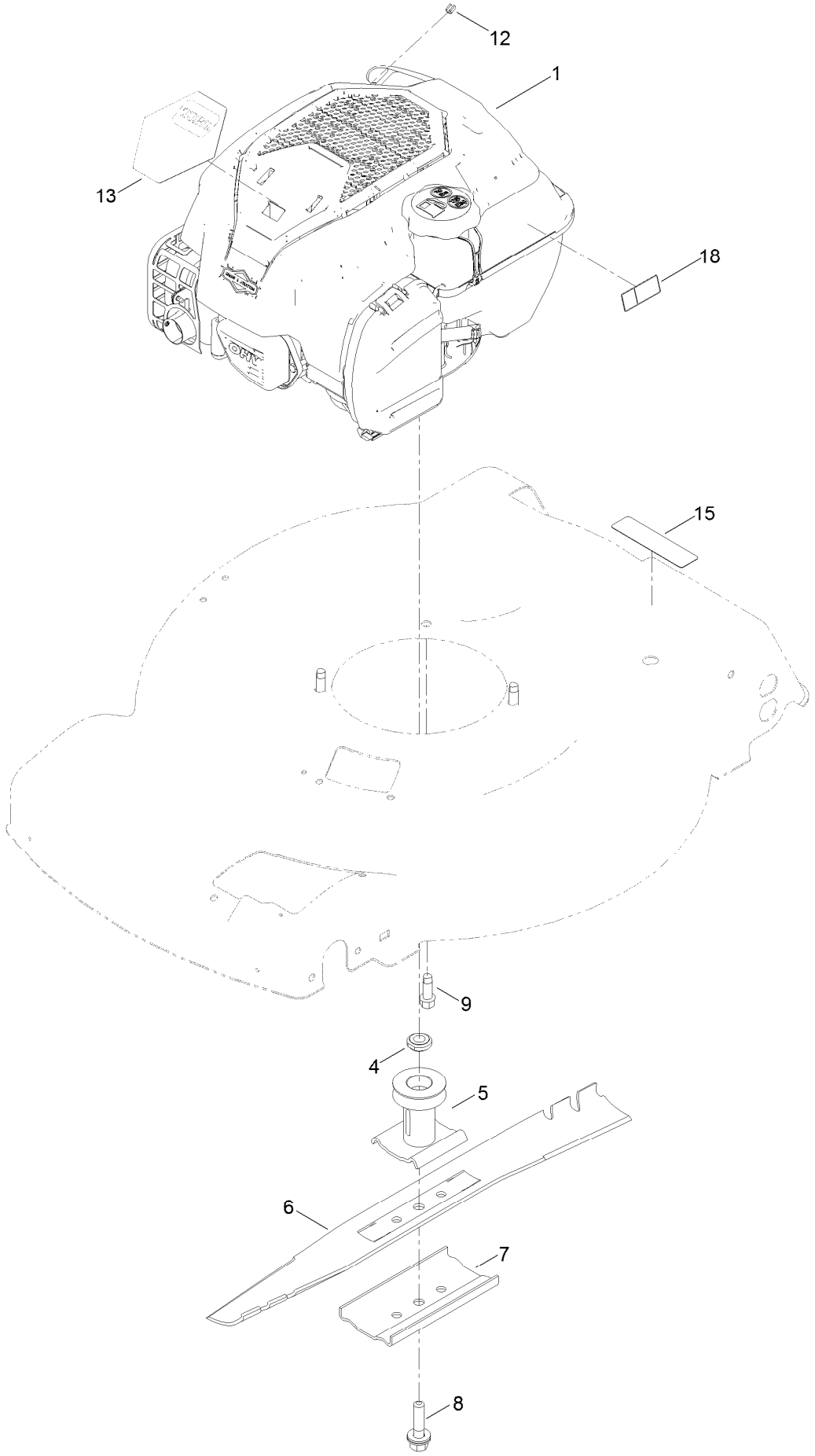

Engine and Blade Assembly (continued)

Ref.	Part Number	Qty.	Description
1		1	Engine-Briggs, 104M020131F1 ●■
4	106-3999	1	Spacer-Driver
5	106-3987	1	Driver-Blade
6	131-4547-03	1	Blade-22 Inch
7	108-3766-03	1	Support-Blade
8	125-2466	1	Bolt-Blade
9	95-1726	3	Screw-Taptite
12	2210-316	1	Stop-Rope
13	133-8105	1	Decal-Shroud
15	117-2718	1	Decal-Arrester, Spark
18	133-8198	1	Decal-Level, Fuel

● Not serviced separately

■ Obtain parts from www.briggsandstratton.com

Front Wheel Height-of-Cut Assembly

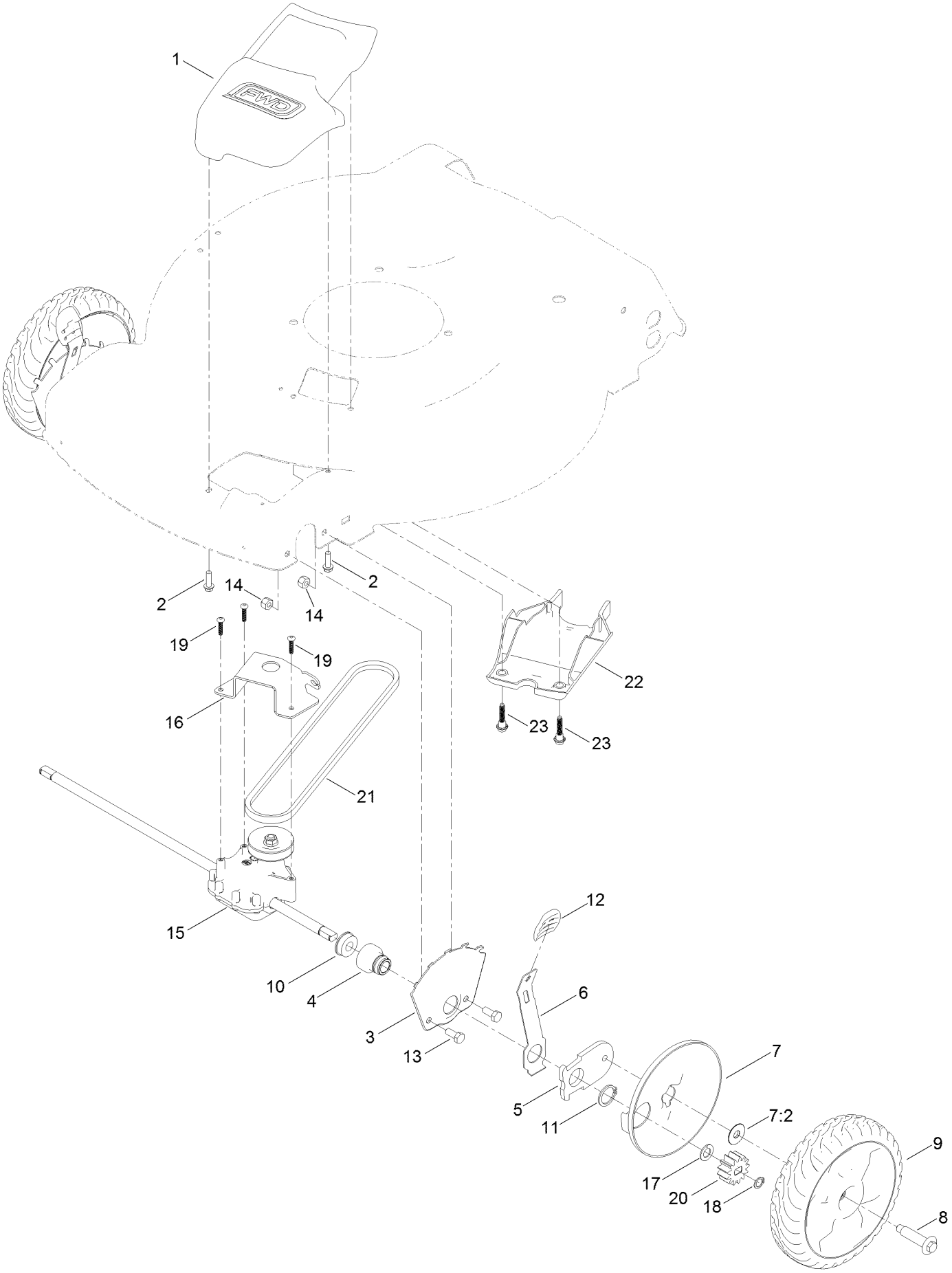

Front Wheel Height-of-Cut Assembly (continued)

Ref.	Part Number	Qty.	Description
1	136-5907	1	Cover-Belt
2	46-8091	2	Screw-HWH
3	115-1956-03	2	Plate-HOC, Front
4	131-0836	2	Retainer-Bearing, HOC
5	137-9128	2	Arm-Pivot, Front
6	105-1809	2	Arm-Spring
7	127-6840	2	Wheel Cover ASM
7:2	614426	1	Washer-Stepped
8	614650	2	Bolt-Shoulder
9	119-0311	2	8 Inch Wheel ASM
10	104-8699	2	Bearing-Ball
11	32151-36	2	Ring-Retaining
12	105-3042	2	Knob-Lever, HOC
13	322-3	4	Screw-HH
14	3296-29	4	Nut-Lock, NI
15	137-4822	1	Transmission-(5.25:1)
16	114-7978-03	1	Bracket-Transmission
17	110-7191	2	Washer-Thrust
18	32151-61	2	Ring-Retaining
19	108-7476	3	Screw-Plastite
20	131-0896	2	Gear-Pinion, 13T
21	117-1018	1	V-Belt
22	136-5851	1	Cover-Belt, Front Lower
23	131-0837	2	Screw-Shoulder, HHF

Rear Wheel Height-of-Cut Assembly

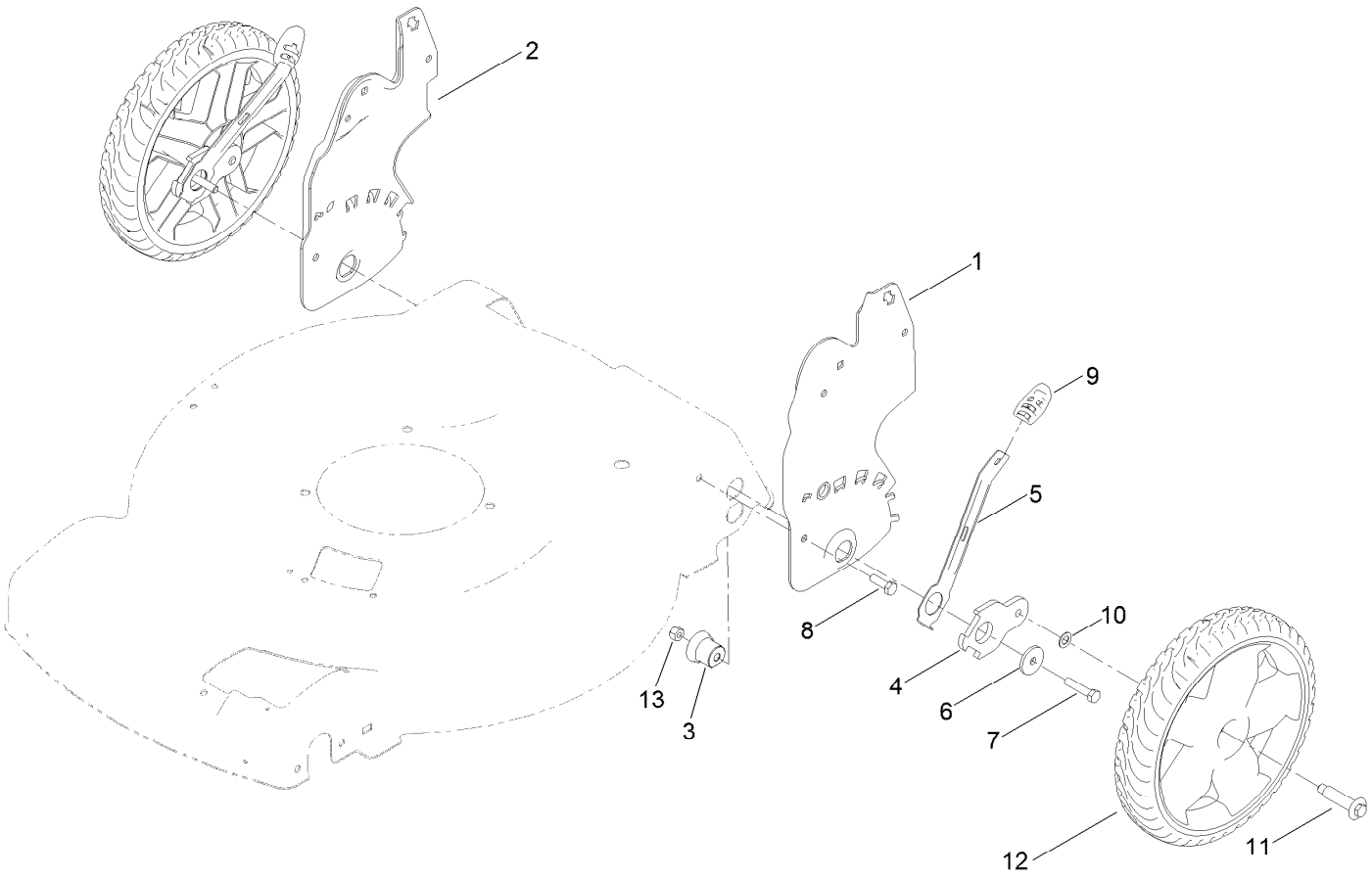

Rear Wheel Height-of-Cut Assembly (continued)

Ref.	Part Number	Qty.	Description
1	132-4490-03	1	Plate-HOC, LH
2	132-4491-03	1	Plate-HOC, RH
3	131-0895	2	Bushing-Mount, HOC
4	137-9129	2	Arm-Pivot,Rear
5	115-2899	2	Arm-Spring, Rear
6	105-3048	2	Washer-Flat
7	322-7	2	Screw-HH
8	322-5	2	Screw-HH
9	105-3042	2	Knob-Lever, HOC
10	40-1940	2	Washer
11	614650	2	Bolt-Shoulder
12	119-0313	2	11 Inch Wheel ASM
13	3296-29	2	Nut-Lock, NI

Handle and Control Assembly

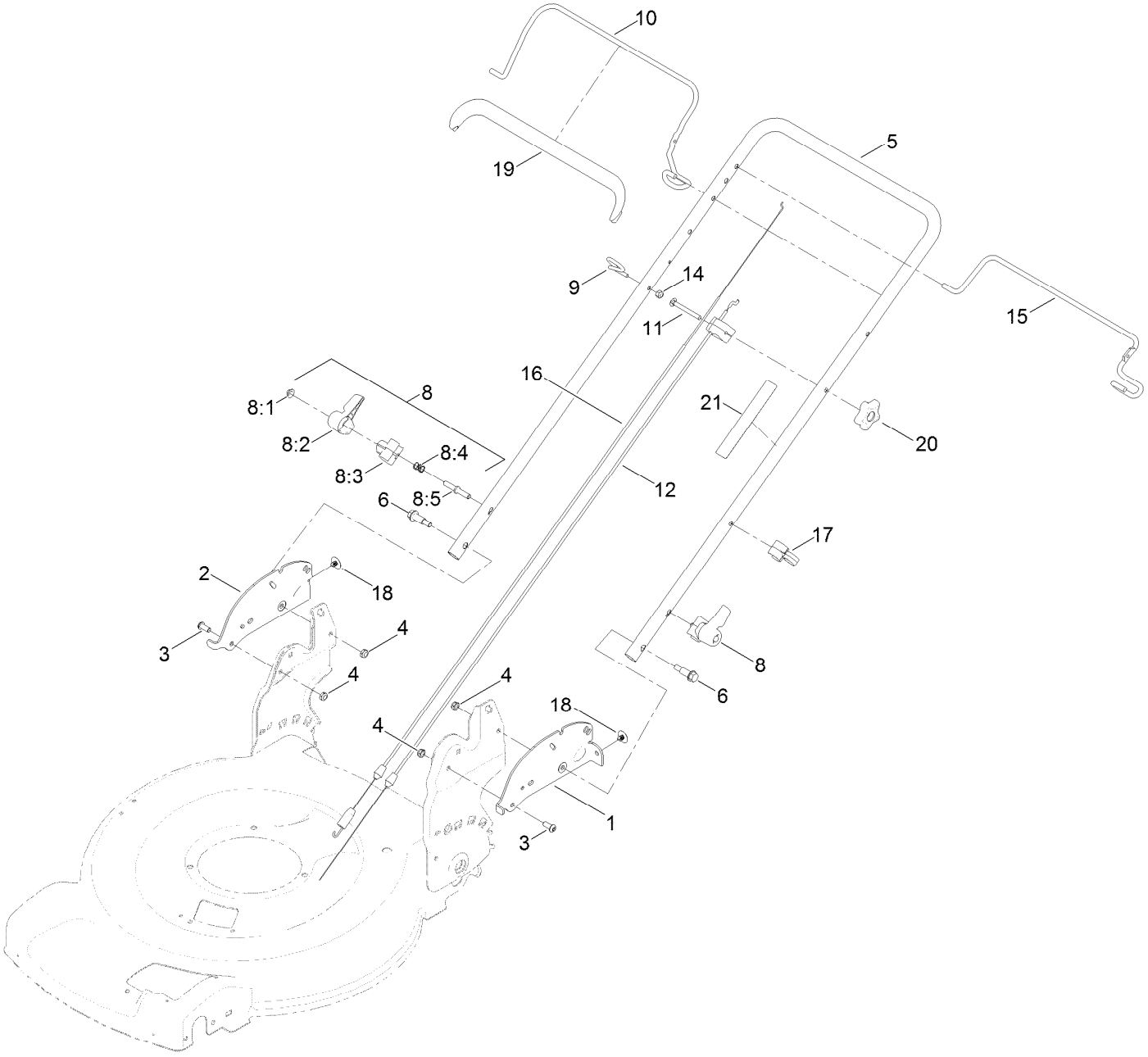

Handle and Control Assembly (continued)

Ref.	Part Number	Qty.	Description
1	132-4492-03	1	Plate-Handle, LH
2	132-4493-03	1	Plate-Handle, RH
3	3274-55	2	Screw-HSBH
4	3296-47	4	Nut-Lock, NI
5	131-4569-05	1	Handle
6	130-2344	2	Bolt-Shoulder
8	115-2860	2	Quick Release ASM
8:1	109-0917	1	Nut-Push
8:2	114-7995	1	Lever
8:3	114-7996	1	Anchor-Spring
8:4	115-2858	1	Spring-Compression
8:5	114-2675	1	Rod-Release
9	86-9671	1	Guide-Rope
10	131-0821-03	1	Bail-Brake
11	136-7082	1	Screw-CARR
12	133-8109	1	Cable-Brake, HP
14	3296-73	1	Nut-Lock, NI
15	131-0835-03	1	Bail-Traction
16	119-2379	1	Cable-Traction
17	114-7988	1	Guide-Cable
18	130-6721	2	Clip-Tree
19	127-6847	1	Cover-Bail
20	131-0897	1	Knob-Handle, Locking
21	132-4470	1	Decal-Traction, Adjust

Attachments and Accessories

For 20339 22in Recycler Lawn Mower with SmartStow

Product Name	Model/Part
Briggs Maint Kit	130-8148
Belt Cover Kit	136-9125
Replacement Bag	59305
Replacement Bag and Frame Kit	59307
22 Inch Atomic Blade	59534P

Notes:

Notes:

Notes:



Count on it.