Form No. 3418-801 Rev A

22in Recycler® Lawn Mower

Model No. 20373—Serial No. 402100000 and Up

Operator's Manual

Introduction

This rotary-blade, walk-behind lawn mower is intended to be used by residential homeowners. It is designed primarily for cutting grass on well-maintained lawns on residential properties. It is not designed for cutting brush or for agricultural uses.

Read this information carefully to learn how to operate and maintain your product properly and to avoid injury and product damage. You are responsible for operating the product properly and safely.

You may contact Toro directly at www.Toro.com for product and accessory information, help finding a dealer, or to register your product.

Whenever you need service, genuine Toro parts, or additional information, contact an Authorized Service Dealer or Toro Customer Service and have the model and serial numbers of your product ready. Figure 1 identifies the location of the model and serial numbers on the product. Write the numbers in the space provided.

Important: **With your mobile device, you can scan the QR code on the serial number decal (if equipped) or go to www.Toro.com to access warranty, parts, and other product information.**

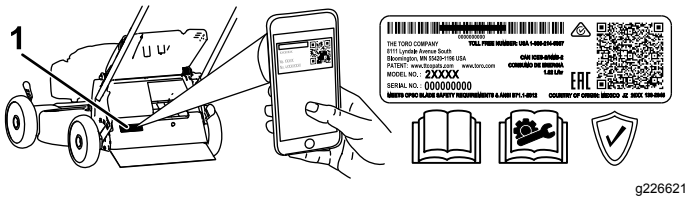

g226621

Figure 1

1. Model and serial number location

Model No. _____

Serial No. _____

This manual identifies potential hazards and has safety messages identified by the safety-alert symbol (Figure 2), which signals a hazard that may cause serious injury or death if you do not follow the recommended precautions.



g000502

Figure 2

Safety-alert symbol

This manual uses 2 words to highlight information. **Important** calls attention to special mechanical information and **Note** emphasizes general information worthy of special attention.

⚠ WARNING

CALIFORNIA
Proposition 65 Warning

This product contains a chemical or chemicals known to the State of California to cause cancer, birth defects, or reproductive harm.

The engine exhaust from this product contains chemicals known to the State of California to cause cancer, birth defects, or other reproductive harm.

It is a violation of California Public Resource Code Section 4442 or 4443 to use or operate the engine on any forest-covered, brush-covered, or grass-covered land unless the engine is equipped with a spark arrester, as defined in Section 4442, maintained in effective working order or the engine is constructed, equipped, and maintained for the prevention of fire.

Gross or Net Torque: The gross or net torque of this engine was laboratory rated by the engine manufacturer in accordance with the Society of Automotive Engineers (SAE) J1940 or J2723. As configured to meet safety, emission, and operating requirements, the actual engine torque on this class of mower will be significantly lower. Please refer to the engine manufacturer's information included with the machine.

Important: **If you are using this machine above 1500 m (5,000 ft) for a continuous period, ensure that the High Altitude Kit has been installed so that the engine meets CARB/EPA emission regulations. The High Altitude Kit increases engine performance while preventing spark-plug fouling, hard starting, and increased emissions.**

© 2018—The Toro® Company
8111 Lyndale Avenue South
Bloomington, MN 55420

Register at www.Toro.com.

Original Instructions (EN)
Printed in Mexico
All Rights Reserved

3418-801 A

Once you have installed the kit, attach the high-altitude label next to the serial decal on the machine. Contact any Authorized Toro Service Dealer to obtain the proper High Altitude Kit and high-altitude label for your machine. To locate a dealer convenient to you, access our website at www.Toro.com or contact our Toro Customer Care Department at the number(s) listed in your Emission Control Warranty Statement.

Remove the kit from the engine and restore the engine to its original factory configuration when running the engine under 1500 m (5,000 ft). Do not operate an engine that has been converted for high-altitude use at lower altitudes; otherwise, you could overheat and damage the engine.

If you are unsure whether or not your machine has been converted for high-altitude use, look for the following label (Figure 3).



Figure 3

Contents

Introduction 1
Safety 2
General Safety 2
Safety and Instructional Decals 3
Setup 5
1 Assembling and Unfolding the Handle 5
2 Installing the Blade-Control Bar 6
3 Installing the Recoil-Starter Rope in the Rope Guide 6
4 Filling the Engine with Oil 6
5 Assembling the Grass Bag 7
Product Overview 8
Operation 8
Before Operation 8
Before Operation Safety 8
Filling the Fuel Tank 9
Checking the Engine-Oil Level 10
Adjusting the Handle Height 10
Adjusting the Cutting Height 11
During Operation 11
During Operation Safety 11
Starting the Engine 12
Using the Self-Propel Drive 13
Shutting Off the Engine 13
Engaging the Blade 13
Disengaging the Blade 14
Checking the Blade-Brake-Clutch Operation 14
Recycling the Clippings 14
Bagging the Clippings 15
Operating the Bag-on-Demand Lever 15
Side-Discharging the Clippings 16
Operating Tips 16
After Operation 17
After Operation Safety 17
Cleaning under the Machine 17
Folding the Handle 18
Maintenance 19
Recommended Maintenance Schedule(s) 19
Maintenance Safety 19
Preparing for Maintenance 19
Servicing the Air Filter 20
Changing the Engine Oil 20
Cleaning the Blade-Brake-Clutch Shield 21
Adjusting the Self-Propel Drive 22
Storage 22
Preparing the Machine for Storage 22
Removing the Machine from Storage 22

Safety

This machine has been designed in accordance with ANSI B71.1-2012.

General Safety

This product is capable of amputating hands and feet and of throwing objects. Always follow all safety instructions to avoid serious personal injury.

Using this product for purposes other than its intended use could prove dangerous to you and bystanders.

- Read, understand, and follow the instructions and warnings in this *Operator's Manual* and on the machine and attachments before starting the engine.
- Do not put your hands or feet near moving parts of or under the machine. Keep clear of any discharge opening.
- Do not operate the machine without all guards and other safety protective devices in place and working on the machine.
- Keep bystanders and children a safe distance away from the machine. Do not allow children to operate the machine. Allow only people who are responsible, trained, familiar with the instructions, and physically capable to operate the machine.
- Stop the machine, shut off the engine, and wait for all moving parts to stop before servicing, fueling, or unclogging the machine.

Improperly using or maintaining this machine can result in injury. To reduce the potential for injury, comply with these safety instructions and always pay attention to the safety-alert symbol, which means Caution, Warning, or Danger—personal safety instruction. Failure to comply with these instructions may result in personal injury or death.

You can find additional safety information where needed throughout this manual.

Safety and Instructional Decals

Safety decals and instructions are easily visible to the operator and are located near any area of potential danger. Replace any decal that is damaged or missing.

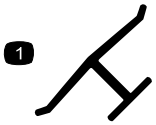

decaloemmarkt

Manufacturer's Mark

1. This mark indicates that the blade is identified as a part from the original machine manufacturer.



decal94-8072

94-8072



decal117-2718

117-2718



decal125-5026

125-5026

1. Recycling mode
2. Bagging mode

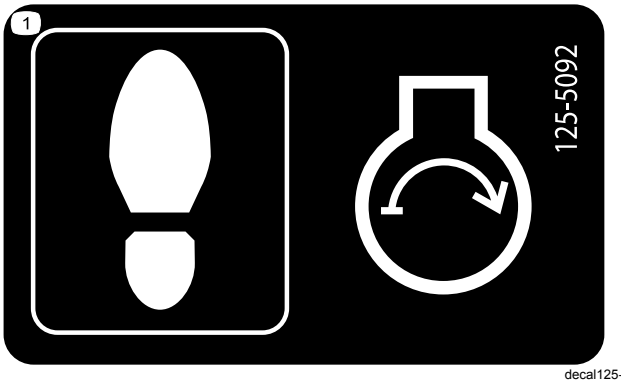

decal125-5092

125-5092

1. Step on the mower housing to start the engine.

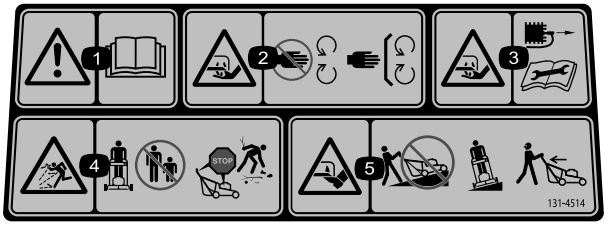

decal131-4514b

131-4514

1. Warning—read the *Operator's Manual*.
2. Cutting/dismemberment hazard of hand, mower blade—stay away from moving parts; keep all guards and shields in place.
3. Cutting/dismemberment hazard of hand, mower blade—disconnect the spark-plug wire and read the instructions before servicing or performing maintenance.
4. Thrown object hazard—keep bystanders a safe distance away from the machine; shut off the engine before leaving the operating position; pick up any debris before mowing.
5. Cutting/dismemberment hazard of foot, mower blade—do not operate up and down slopes; operate side to side on slopes; look behind you when backing up.

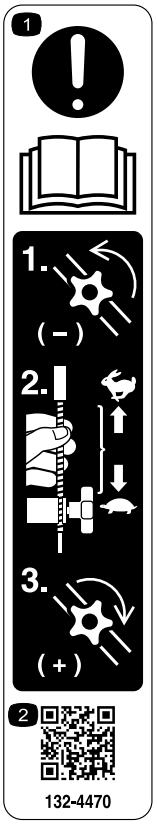

decal132-4470

132-4470

Traction Adjustment

1. Attention; read the *Operator's Manual*—1) Loosen the knob by turning it counterclockwise; 2) Pull the cable(s) away from the engine to decrease the traction, or push the cable(s) toward the engine to increase the traction; 3) Tighten the knob by turning it clockwise.
2. Scan the QR code for more information on traction adjustment.

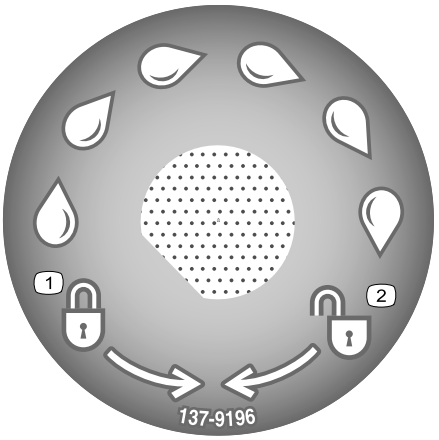

decal137-9196

137-9196

1. Lock
2. Unlock

Setup

Important: **Remove and discard the protective plastic sheet that covers the engine and any other plastic or wrapping on the machine.**

1

Assembling and Unfolding the Handle

No Parts Required

Procedure

Note: Ensure that the cables are routed on the outside of the handle and are not pinched (D of Figure 4).

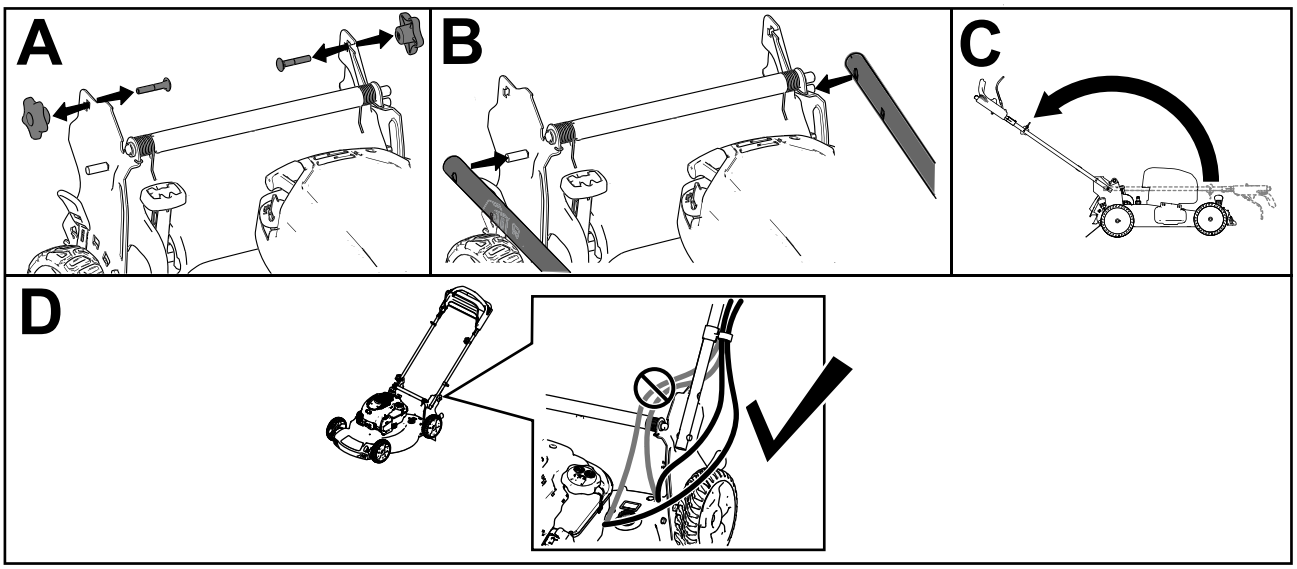

g240447

Figure 4

2

Installing the Blade-Control Bar

No Parts Required

Procedure

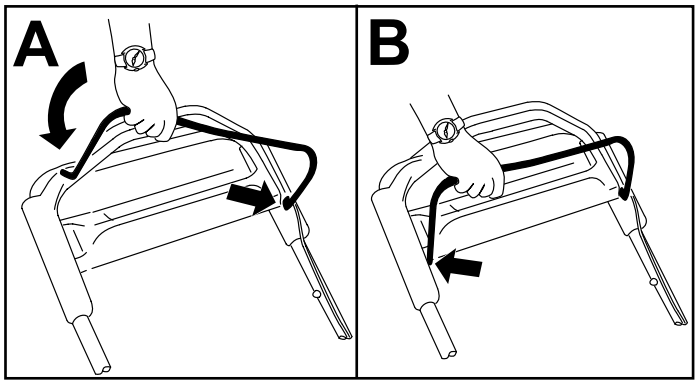

g235299

Figure 5

3

Installing the Recoil-Starter Rope in the Rope Guide

No Parts Required

Procedure

Important: **To start the engine safely and easily whenever you use the machine, install the recoil-starter rope in the rope guide.**

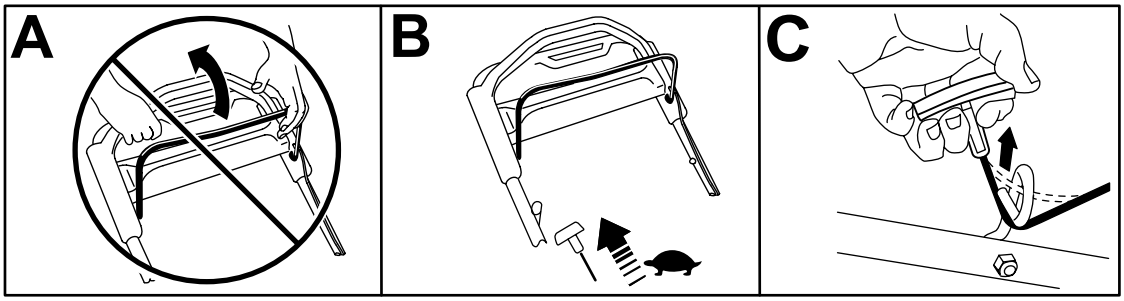

g236533

Figure 6

4

Filling the Engine with Oil

No Parts Required

Procedure

Important: **Your machine does not come with oil in the engine, but it does come with a bottle of oil. Before starting the engine, fill the engine with oil.**

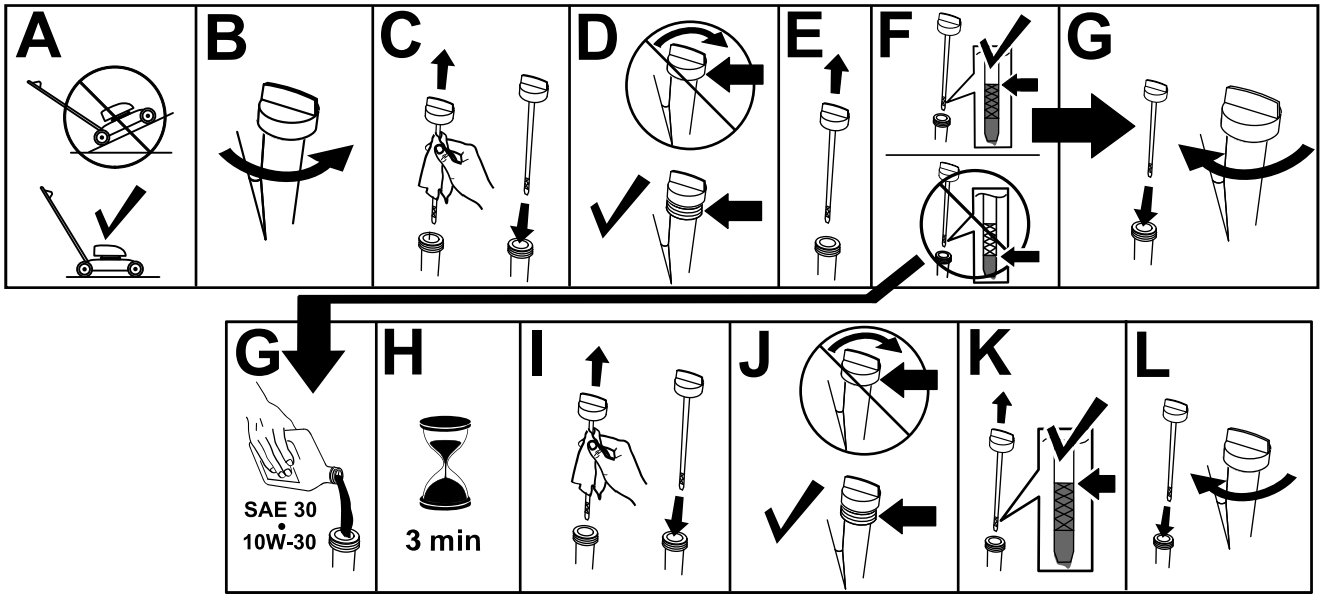

g235721

Figure 7

5

Assembling the Grass Bag

No Parts Required

Procedure

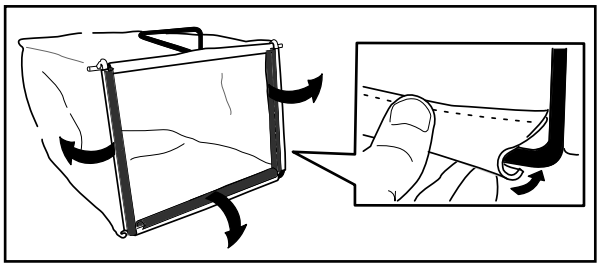

g230447

Figure 8

Product Overview

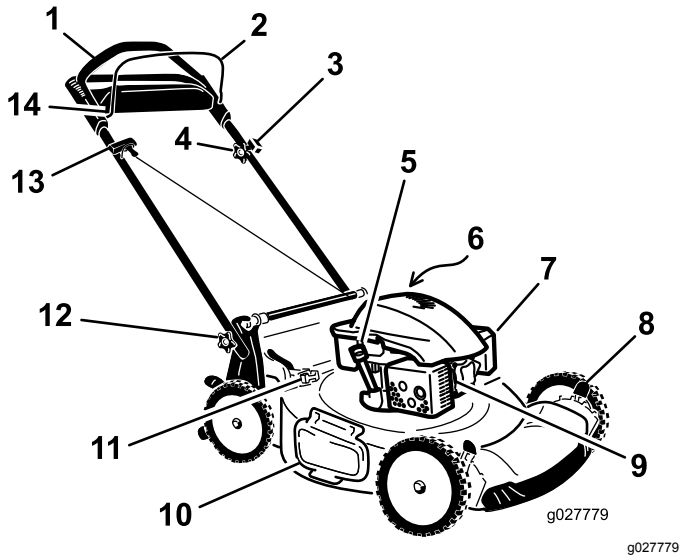

Figure 9

1.	Handle	8.	Cutting-height lever (4)
2.	Blade-control bar	9.	Spark plug
3.	Engine-shutoff button	10.	Side-discharge deflector
4.	Adjustment knob for the self-propel drive	11.	Bag-on-demand lever
5.	Oil fill/dipstick	12.	Handle knob (2)
6.	Fuel-tank cap (not shown)	13.	Recoil-start handle
7.	Air filter	14.	Control-bar lock

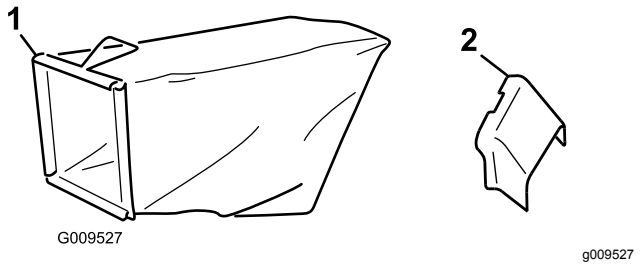

Figure 10

1.	Grass bag	2.	Side-discharge chute

Operation

Note: Determine the left and right sides of the machine from the normal operating position.

Before Operation

Before Operation Safety

General Safety

- Become familiar with the safe operation of the equipment, operator controls, and safety signs.
- Check that all guards and safety devices, such as deflectors and/or grass catcher, are in place and working properly.
- Always inspect the machine to ensure that the blades, blade bolts, and cutting assembly are not worn or damaged.
- Inspect the area where you will use the machine, and remove all objects that could interfere with the operation of the machine or that the machine could throw.
- Adjusting the cutting height may bring you into contact with the moving blade, causing serious injury.
  - Shut off the engine, remove the ignition key (electric-start model only), and wait for all moving parts to stop.
  - Do not put your fingers under the housing when adjusting the cutting height.

Fuel Safety

- Fuel is extremely flammable and highly explosive. A fire or explosion from fuel can burn you and others and can damage property.
  - To prevent a static charge from igniting the fuel, place the container and/or machine directly on the ground before filling, not in a vehicle or on an object.
  - Fill the fuel tank outdoors, in an open area, when the engine is cold. Wipe up any fuel that spills.
  - Do not handle fuel when smoking or around an open flame or sparks.
  - Do not remove the fuel cap or add fuel to the tank while the engine is running or hot.
  - If you spill fuel, do not attempt to start the engine. Avoid creating a source of ignition until the fuel vapors have dissipated.

  - Store fuel in an approved container and keep it out of the reach of children.
- Fuel is harmful or fatal if swallowed. Long-term exposure to vapors can cause serious injury and illness.
  - Avoid prolonged breathing of vapors.
  - Keep your hands and face away from the nozzle and the fuel-tank opening.
  - Keep fuel away from your eyes and skin.

Filling the Fuel Tank

- For best results, use only clean, fresh, unleaded gasoline with an octane rating of 87 or higher ((R+M)/2 rating method).
- Oxygenated fuel with up to 10% ethanol or 15% MTBE by volume is acceptable.
- **Do not** use ethanol blends of gasoline, such as E15 or E85, with more than 10% ethanol by volume. Performance problems and/or engine damage may result, which may not be covered under warranty.
- **Do not** use gasoline containing methanol.
- **Do not** store fuel either in the fuel tank or in fuel containers over the winter unless fuel stabilizer has been added to the fuel.
- **Do not** add oil to gasoline.

Fill the fuel tank with fresh unleaded regular gasoline from a major name-brand service station (Figure 11).

Important: **To reduce starting problems, add fuel stabilizer to the gasoline all season. Mix the stabilizer with gasoline less than 30 days old.**

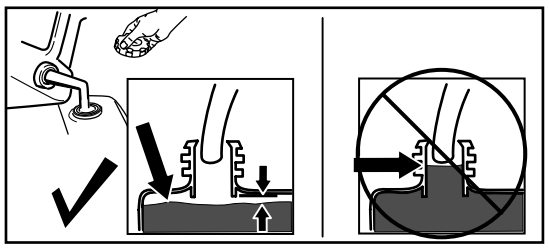

g230458

Figure 11

Checking the Engine-Oil Level

Service Interval: Before each use or daily

Important: **If the oil level in the engine is too low or too high and you run the engine, you may damage the engine.**

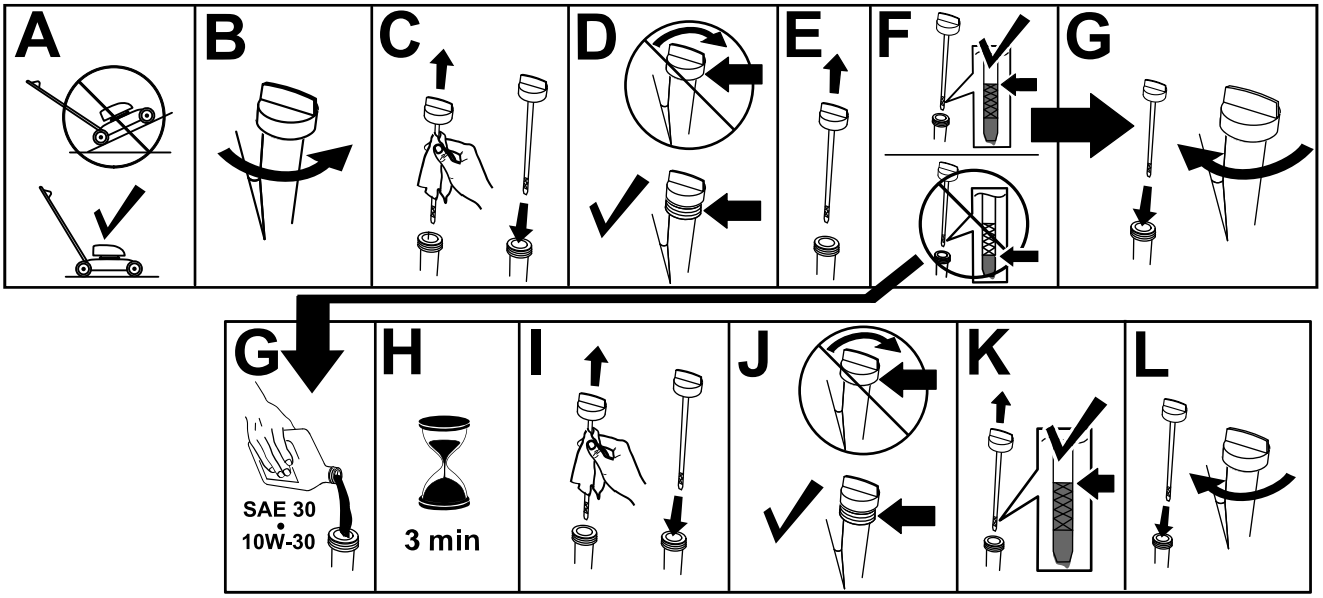

Figure 12

Adjusting the Handle Height

You can raise or lower the handle in 1 of 2 positions that is more comfortable for you (Figure 13).

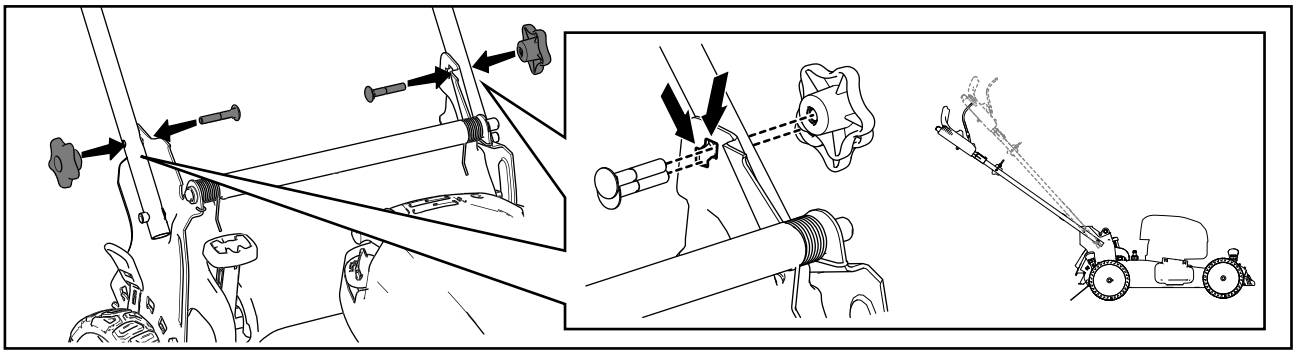

Figure 13

Adjusting the Cutting Height

⚠ WARNING

Adjusting the cutting height may bring you into contact with the moving blade, causing serious injury.

- **Shut off the engine and wait for all moving parts to stop.**
- **Do not put your fingers under the housing when adjusting the cutting height.**

⚠ CAUTION

If the engine has been running, the muffler will be hot and can severely burn you.

Keep away from the hot muffler.

Adjust the cutting height as desired. Set all the wheels to the same height; refer to Figure 14.

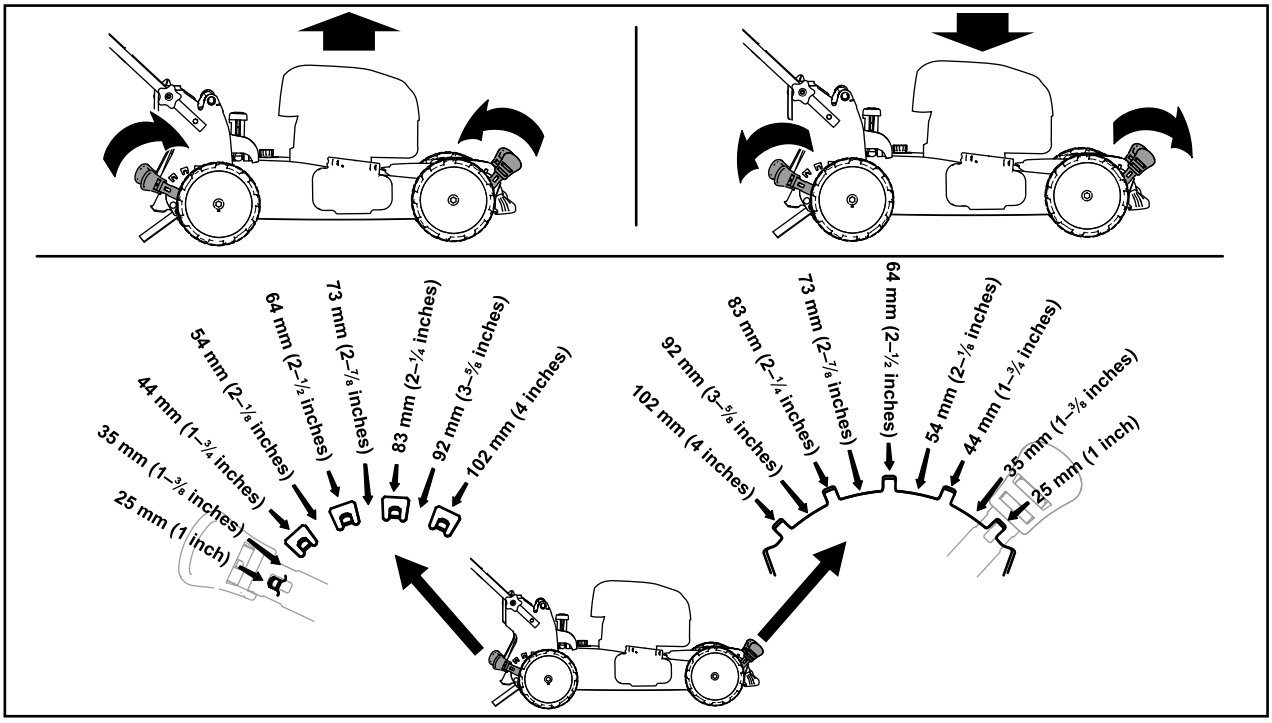

g223084

Figure 14

During Operation

During Operation Safety

General Safety

- Wear appropriate clothing, including eye protection; long pants; slip-resistant, substantial footwear; and hearing protection. Tie back long hair, secure loose clothing, and do not wear loose jewelry.
- Do not operate the machine while ill, tired, or under the influence of alcohol or drugs.
- The blade is sharp; contacting the blade can result in serious personal injury. Shut off the engine, remove the ignition key (electric-start model only), and wait for all moving parts to stop before leaving the operating position.
- When you release the blade-control bar, the engine should shut off and the blade should stop within 3 seconds. If not, stop using your machine immediately and contact an Authorized Service Dealer.
- Keep bystanders, especially small children, out of the operating area. Stop the machine if anyone enters the area.

- Always look down and behind you before moving the machine in reverse.
- Operate the machine only in good visibility and appropriate weather conditions. Do not operate the machine when there is the risk of lighting.
- Wet grass or leaves can cause serious injury if you slip and contact the blade. Avoid mowing in wet conditions.
- Use extreme care when approaching blind corners, shrubs, trees, or other objects that may block your view.
- Watch for holes, ruts, bumps, rocks, or other hidden objects. Uneven terrain could cause the machine to overturn or cause you to lose your balance or footing.
- If the machine strikes an object or starts to vibrate, immediately shut off the engine, remove the key (if equipped), wait for all moving parts to stop, and disconnect the wire from the spark plug before examining the machine for damage. Make all necessary repairs before resuming operation.
- Before leaving the operating position, shut off the engine, remove the ignition key (electric-start model only), and wait for all moving parts to stop.
- If the engine has been running the muffler will be hot and can severely burn you. Keep away from the hot muffler.
- Check the grass catcher components and the discharge chute frequently for any wear or deterioration and replace them with the manufacturer's recommended parts when necessary.
- Use accessories and attachments approved by The Toro® Company only.

Slope Safety

- Mow across the face of slopes; never up and down. Use extreme caution when changing direction on slopes.
- Do not mow on excessively steep slopes. Poor footing could cause a slip-and-fall accident.
- Mow with caution near drop-offs, ditches, or embankments.

Starting the Engine

Note: You can start the engine either from the operating position (Figure 15) or at the engine (with the recoil-start handle out of the rope guide).

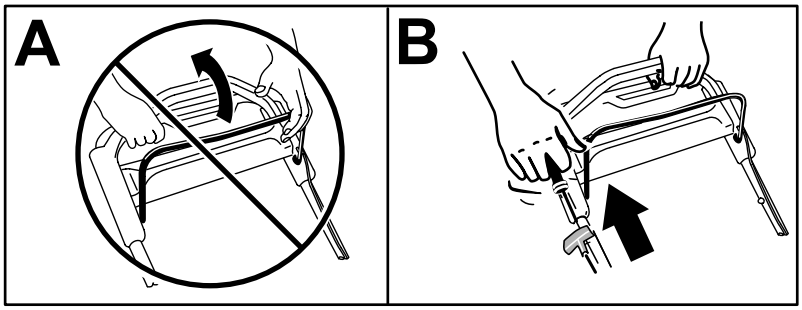

g236579

Figure 15

Pull the recoil-starter handle lightly until you feel resistance, then pull it sharply. Allow the rope to return to the handle slowly.

Note: If the machine does not start after several attempts, contact an Authorized Service Dealer.

Using the Self-Propel Drive

To operate the self-propel drive, simply walk with your hands on the upper handle and your elbows at your sides, and the machine will automatically keep pace with you (Figure 16).

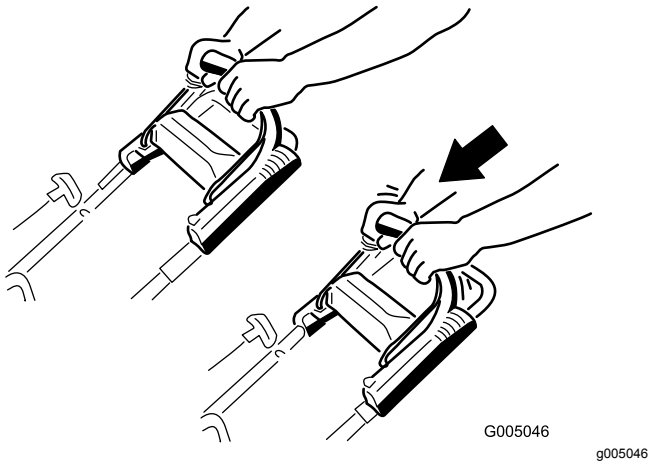

Figure 16

Note: If the machine does not freely roll backward after self-propelling, stop walking, hold your hands in place, and allow the machine to roll a couple of centimeters (inches) forward to disengage the wheel drive. You can also try reaching just under the upper handle to the metal handle and pushing the machine forward a couple of centimeters (inches). If the machine still does not roll backward easily, contact an Authorized Service Dealer.

Shutting Off the Engine

Service Interval: Before each use or daily

To shut off the engine, press and hold the engine-shutoff button (Figure 18) until the engine shuts off.

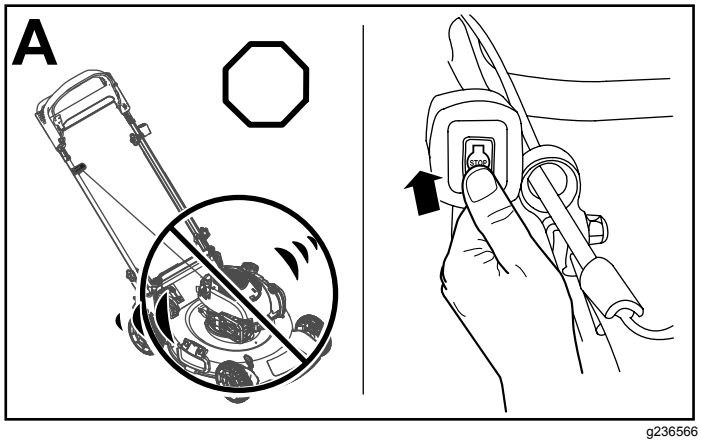

Figure 17

Engaging the Blade

When you start your engine, the blade does not turn. You must engage the blade to mow.

1. Pull the control-bar lock back (Figure 18).

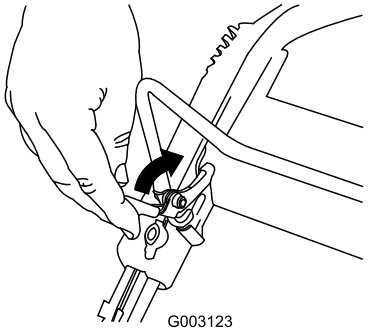

Figure 18

2. Pull the blade-control bar to the handle (Figure 19).

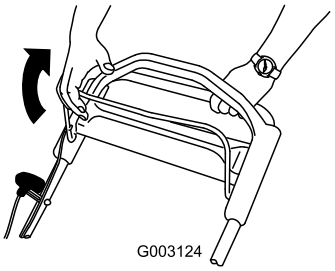

Figure 19

3. Hold the blade-control bar against the handle (Figure 20).

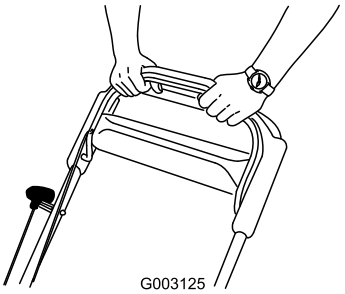

Figure 20

Disengaging the Blade

Release the blade-control bar (Figure 21).

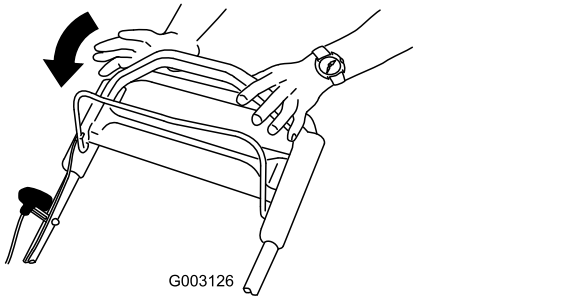

g003126

Figure 21

Important: **When you release the blade-control bar, the blade should stop within 3 seconds. If it does not stop properly, stop using your machine immediately and contact an Authorized Service Dealer.**

Checking the Blade-Brake-Clutch Operation

Check the control bar before each use to ensure that the blade-brake-clutch system is operating properly.

Using the Grass Bag

Service Interval: Before each use or daily

You can use the grass bag to perform an additional test to check the blade-brake clutch.

1. Install the empty grass bag on the machine.
2. Start the engine.
3. Engage the blade.

   Note: The bag should begin to inflate, indicating that the blade is engaged and rotating.
4. Release the blade-control bar.

   Note: If the bag does not immediately deflate, the blade is still rotating. The blade-brake clutch may be deteriorating and, if ignored, could result in an unsafe operating condition. Have the machine inspected and serviced by an Authorized Service Dealer.
5. Shut off the engine and wait for all moving parts to stop.

Not Using the Grass Bag

1. Move the machine onto a paved surface in a non-windy area.
2. Set all 4 wheels to the 83 mm (3-1/4 inch) cutting-height setting.
3. Take a half sheet of newspaper and crumple it into a ball small enough to go under the machine housing (about 76 mm or 3 inches in diameter).
4. Place the newspaper ball about 13 cm (5 inches) in front of the machine.
5. Start the engine.
6. Engage the blade.
7. Release the blade-control bar.
8. Immediately push the machine over the newspaper ball.
9. Shut off the engine and wait for all moving parts to stop.
10. Go to the front of the machine and check the newspaper ball.

    Note: If the newspaper ball did not go under the machine, repeat steps 4 through 10.
11. If the newspaper is unravelled or shredded, the blade did not stop properly, which could result in an unsafe operating condition. Contact an Authorized Service Dealer.

Recycling the Clippings

Your machine comes from the factory ready to recycle the grass and leaf clippings back into the lawn.

If the grass bag is on the machine and the bag-on-demand lever is in the bagging position, move the lever to the recycling position; refer to Operating the Bag-on-Demand Lever (page 15). If the side-discharge chute is on the machine, remove it; refer to Removing the Side-Discharge Chute (page 16).

Bagging the Clippings

Use the grass bag when you want to collect grass and leaf clippings from the lawn.

If the side-discharge chute is on the machine, remove it; refer to Removing the Side-Discharge Chute (page 16). If the bag-on-demand lever is in the recycling position, move it to the bagging position; refer to Operating the Bag-on-Demand Lever (page 15).

Installing the Grass Bag

1. Raise and hold up the rear deflector (A of Figure 22).
2. Install the grass bag, ensuring that the pins on the bag rest in the notches on the handle (B of Figure 22).
3. Lower the rear deflector.

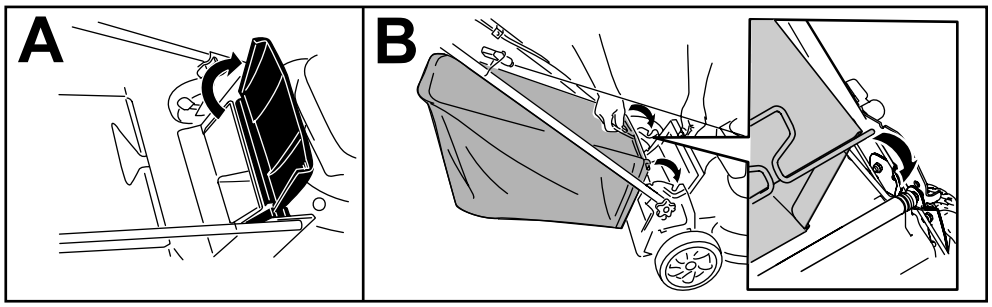

g233434

Figure 22

Removing the Grass Bag

To remove the bag, reverse the steps in Installing the Grass Bag (page 15).

Operating the Bag-on-Demand Lever

The bag-on-demand feature allows you to either collect or recycle grass and leaf clippings while the grass bag is attached to the machine.

- **To bag the grass and leaf clippings**, press the button on the bag-on-demand lever and move the lever forward until the button on the lever pops up (Figure 23).

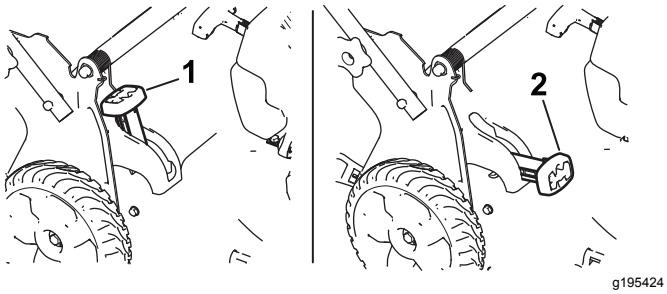

g195424

Figure 23

1. Bag-on-demand lever (in the recycling position)
2. Bag-on-demand lever (in the bagging position)

- **To recycle or side-discharge the grass and leaf clippings**, press the button on the lever and move the lever rearward until the button on the lever pops up.

Important: **For proper operation, remove any grass clippings and debris from the bag-on-demand door and the surrounding opening (Figure 24) before you move the bag-on-demand lever from 1 position to another.**

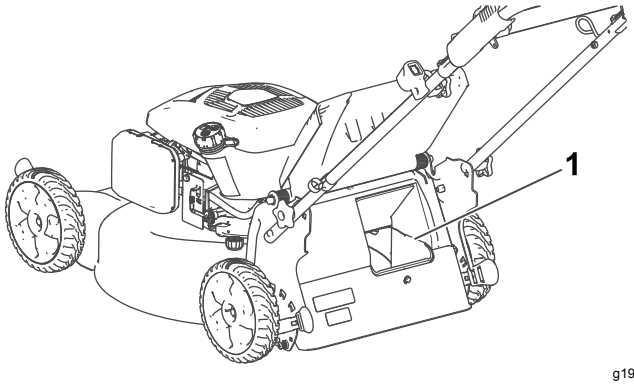

g195423

Figure 24

1. Clean here

Side-Discharging the Clippings

Use side-discharging for cutting very tall grass.

If the grass bag is on the machine and the bag-on-demand lever is in the bagging position, move the lever to the recycling position; refer to Operating the Bag-on-Demand Lever (page 15).

Installing the Side-Discharge Chute

Lift up the side deflector and install the side-discharge chute (A and B of Figure 25).

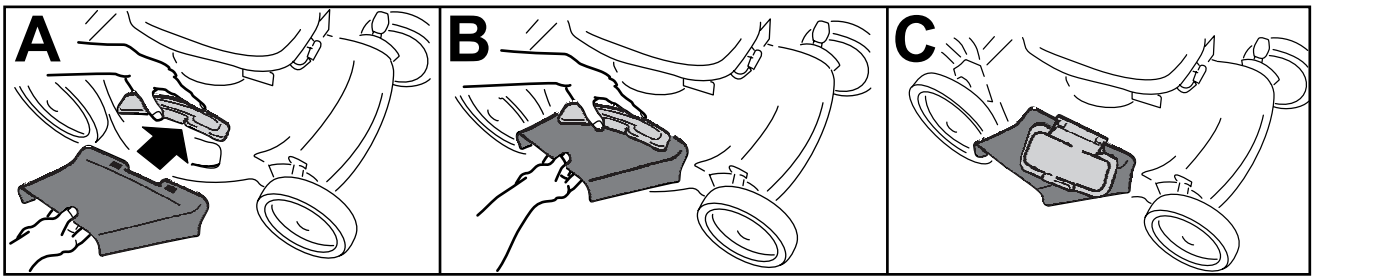

g233435

Figure 25

Removing the Side-Discharge Chute

To remove the side-discharge chute, lift up the side deflector, remove the side-discharge chute, and lower the side-discharge deflector.

Operating Tips

General Mowing Tips

- Inspect the area where you will use the machine and remove all objects that the machine could throw.
- Avoid striking solid objects with the blade. Never deliberately mow over any object.
- If the machine strikes an object or starts to vibrate, immediately shut off the engine, remove the key (if equipped), disconnect the wire from the spark plug, and examine the machine for damage.
- For best performance, install a new blade before the cutting season begins.
- Replace the blade when necessary with a Toro replacement blade.

Cutting Grass

- Cut only about a third of the grass blade at a time. Do not cut below 51 mm (2 inches) unless the grass is sparse or it is late fall when grass growth begins to slow down.
- When cutting grass over 15 cm (6 inches) tall, mow at the highest cutting height setting and walk slower; then mow again at a lower setting for the best lawn appearance. If the grass is too long, the machine may plug and cause the engine to stall.
- Wet grass and leaves tend to clump on the yard and can cause the machine to plug or the engine to stall. Avoid mowing in wet conditions.
- Be aware of a potential fire hazard in very dry conditions, follow all local fire warnings, and keep the machine free of dry grass and leaf debris.
- Alternate the mowing direction. This helps disperse the clippings over the lawn for even fertilization.
- If the finished lawn appearance is unsatisfactory, try 1 or more of the following:
  - Replace the blade or have it sharpened.
  - Walk at a slower pace while mowing.
  - Raise the cutting height on your machine.
  - Cut the grass more frequently.
  - Overlap cutting swaths instead of cutting a full swath with each pass.

Cutting Leaves

- After cutting the lawn, ensure that half of the lawn shows through the cut leaf cover. You may need to make more than a single pass over the leaves.
- If there are more than 13 cm (5 inches) of leaves on the lawn, mow at a higher cutting height and then again at the desired cutting height.
- Slow down your mowing speed if the machine does not cut the leaves finely enough.

After Operation

After Operation Safety

General Safety

- Clean grass and debris from the machine to help prevent fires. Clean up oil or fuel spills.
- Allow the engine to cool before storing the machine in any enclosure.
- Never store the machine or fuel container where there is an open flame, spark, or pilot light, such as on a water heater or on other appliances.

Hauling Safety

- Remove the ignition key (if equipped) before loading the machine for hauling.
- Use care when loading or unloading the machine.
- Secure the machine from rolling.

Cleaning under the Machine

Service Interval: Before each use or daily

For best results, clean the machine soon after you have completed mowing.

1. Move the machine onto a flat paved surface.
2. Shut off the engine and wait for all moving parts to stop before leaving the operating position.
3. Lower the machine to its lowest cutting-height setting. Refer to Adjusting the Cutting Height (page 11).
4. Wash out the area under the rear door where the clippings go from the underside of the machine to the grass bag.

   Note: Wash out the area with the bag-on-demand (if equipped) in both the fully forward and fully rearward positions.
5. Attach a garden hose that is connected to a water supply to the washout port (Figure 26).

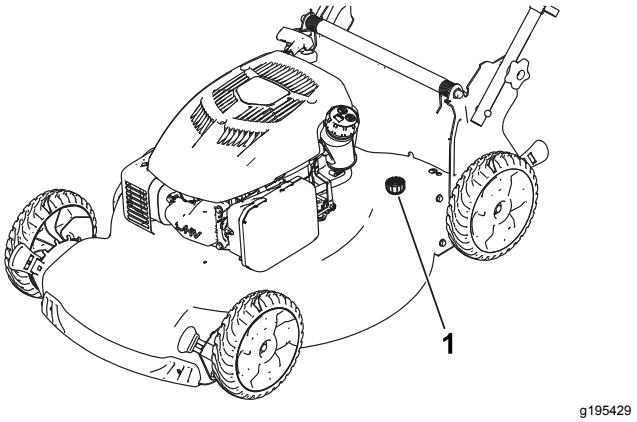

Figure 26

1. Washout port

6. Turn the water on.
7. Start the engine and run it until the clippings no longer come out from under the machine.
8. Shut off the engine.
9. Shut off the water and disconnect the garden hose from the machine.
10. Start the engine and run it for a few minutes to dry the underside of the machine to prevent it from rusting.
11. Shut off the engine and allow it to cool before storing the machine in an enclosed area.

Folding the Handle

⚠ WARNING

Folding or unfolding the handle improperly can damage the cables, causing an unsafe operating condition.

- **Do not damage the cables when folding or unfolding the handle.**
- **If a cable is damaged, contact an Authorized Service Dealer.**

1. Remove and save the 2 handle knobs and 2 carriage bolts from the handle brackets (Figure 27).

   Important: **Route the cables to the outside of the handle knobs as you fold the handle.**

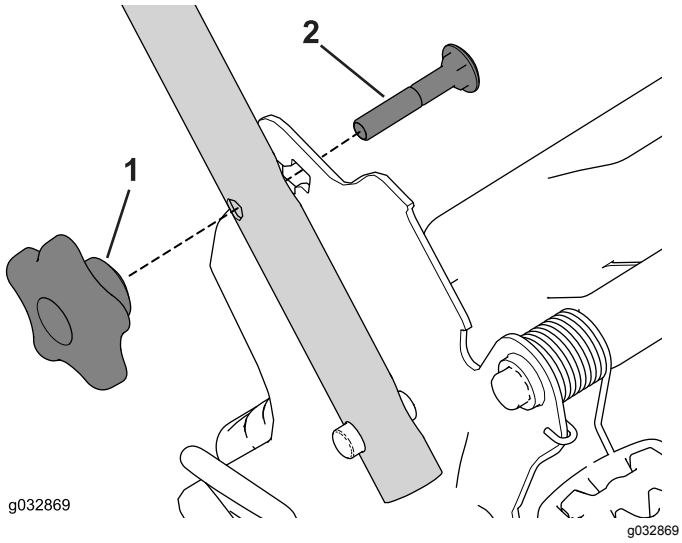

Figure 27

1. Handle knob
2. Carriage bolt

2. Fold the handle by rotating it forward (Figure 28).

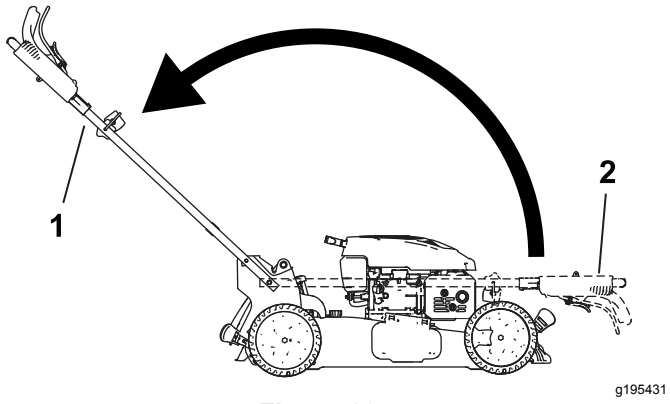

Figure 28

1. Operating position
2. Folded position

3. Insert the carriage bolt (with the bolt head toward the inside) through the handle bracket and the upper hole in the handle end. Ensure that the square edges of each carriage bolt fits into the upper or lower square hole in its related handle bracket (Figure 29).

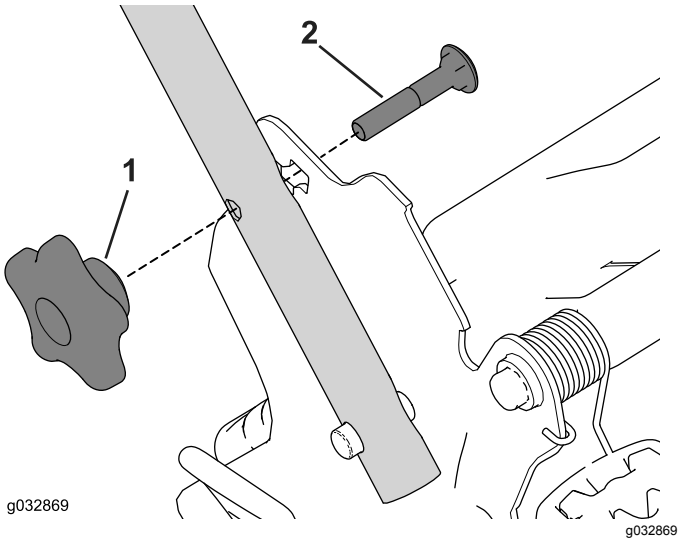

Figure 29

1. Handle knob
2. Carriage bolt

4. Loosely install the handle knobs and carriage bolts on the handle brackets.
5. To unfold the handle, refer to 1 Assembling and Unfolding the Handle (page 5).

Maintenance

Recommended Maintenance Schedule(s)

Maintenance Service Interval	Maintenance Procedure
After the first 5 hours	• Change the engine oil.
Before each use or daily	• Check the engine-oil level. • Ensure that the blade stops within 3 seconds after releasing the blade-control bar. • Check the blade-brake-clutch operation. • Clean grass clippings and dirt from under the machine.
Every 25 hours	• Clean the blade-brake-clutch shield.
Yearly	• Service the air filter. • Change the engine oil. • Clean the engine by removing dirt and debris from its top and sides; clean it more frequently in dusty operating conditions.
Yearly or before storage	• Empty the fuel tank before repairs as directed and before yearly storage.

Maintenance Safety

- Disconnect the spark-plug wire from the spark plug before performing any maintenance procedure.
- Wear gloves and eye protection when servicing the machine.
- The blade is sharp; contacting the blade can result in serious personal injury. Wear gloves when servicing the blade. Do not repair or alter the blade(s).
- Never tamper with safety devices. Check their proper operation regularly.
- Tipping the machine may cause the fuel to leak. Fuel is flammable and explosive, and can cause personal injury. Run the engine dry or remove the fuel with a hand pump; never siphon the fuel.
- To ensure optimum performance and continued safety certification of the machine, use only genuine Toro replacement parts and accessories. Replacement parts and accessories made by other manufacturers could be dangerous, and such use could void the product warranty.

Preparing for Maintenance

1. Shut off the engine and wait for all moving parts to stop.
2. Disconnect the spark-plug wire from the spark plug (Figure 30).

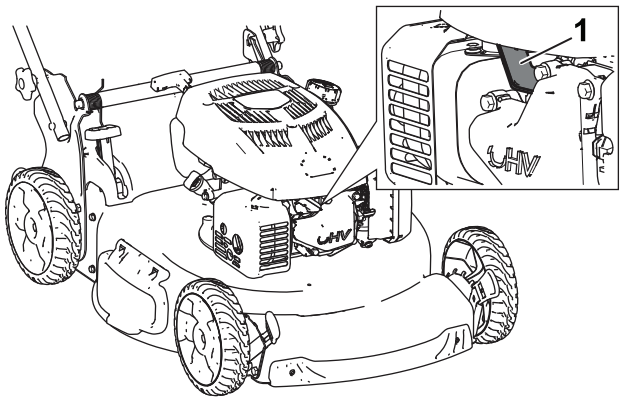

g195617

Figure 30

1. Spark-plug wire

3. After performing the maintenance procedure(s), connect the spark-plug wire to the spark plug.

Important: **Before tipping the machine to change the oil or replace the blade, allow the fuel tank to run dry through normal usage. If you must tip the machine prior to running out of fuel, use a hand fuel pump to remove the fuel. Always tip the machine onto its side, with the dipstick down.**

Servicing the Air Filter

Service Interval: Yearly

1. Press down on the latch tabs on top of the air-filter cover (Figure 31).

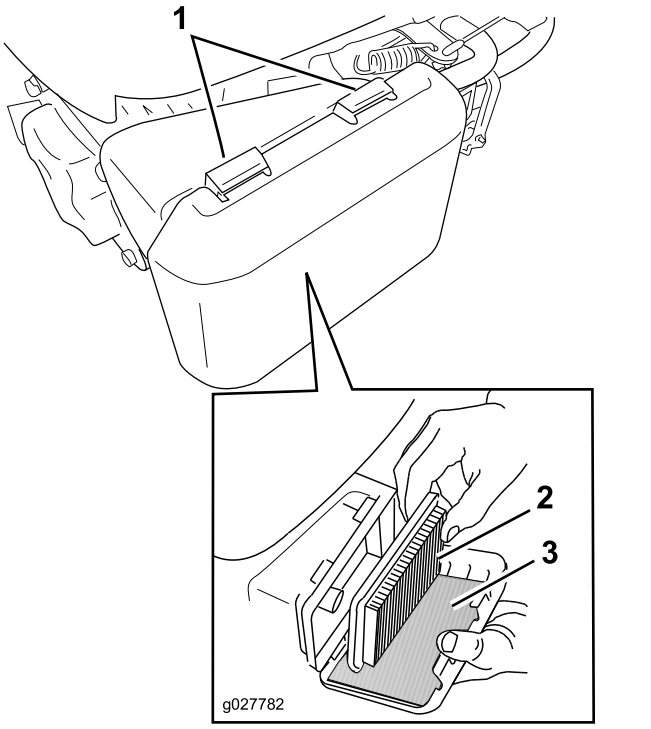

g027782

Figure 31

1. Latch tabs
2. Paper air filter
3. Foam pre-filter

2. Open the cover.
3. Remove the paper air filter and the foam pre-filter (Figure 31).
4. Inspect the foam pre-filter, and replace it if it is damaged or excessively dirty.
5. Inspect the paper air filter.
   - If the air filter is damaged or is wet with oil or fuel, replace it.
   - If the air filter is dirty, tap it on a hard surface several times or blow compressed air less than 207 kPa (30 psi) through the side of the filter that faces the engine.

   Note: Do not brush the dirt off the filter; brushing forces dirt into the fibers.
6. Remove the dirt from the air-filter body and the cover using a moist rag.

   Important: **Do not wipe dirt into the air duct.**
7. Install the foam pre-filter and the paper air filter into the air filter.
8. Install the cover.

Changing the Engine Oil

Service Interval: After the first 5 hours

Yearly

Note: Run the engine a few minutes before changing the oil to warm it. Warm oil flows better and carries more contaminants.

Engine Oil Specifications

Engine oil capacity	0.55 L (18.6 fl oz)
Oil viscosity	SAE 30 or SAE 10W-30 detergent oil
API service classification	SJ or higher

1. Move the machine to a level surface.
2. Refer to Preparing for Maintenance (page 19).
3. Remove the dipstick by rotating the cap counterclockwise and pulling it out (Figure 32).

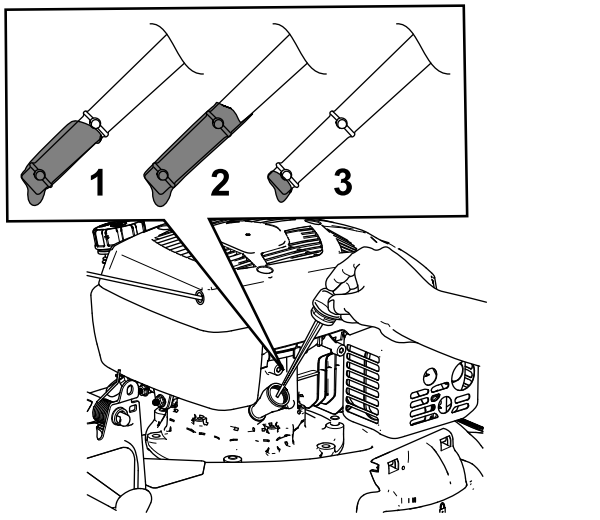

g186624

Figure 32

1. Full
2. High
3.

4. Tip the machine onto its side (so that the air filter is up) to drain the used oil from the oil-fill tube (Figure 32).

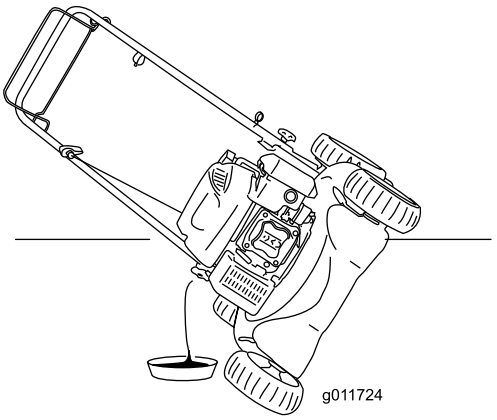

g011724

Figure 33

5. After draining the used oil, return the machine to the operating position.
6. Carefully pour about 3/4 of the engine capacity of oil into the oil-fill tube.
7. Wait 3 minutes for the oil to settle in the engine.
8. Wipe the dipstick clean with a clean cloth.
9. Insert the dipstick into the oil-fill tube, **but do not screw it in,** then remove the dipstick.
10. Read the oil level on the dipstick (Checking the Engine-Oil Level (page 10)).
    - If the oil level on the dipstick is too low, carefully pour a small amount of oil into the oil-fill tube, wait 3 minutes, and repeat steps 8 through 10 until the oil level on the dipstick is correct.
    - If the oil level on the dipstick is too high, drain the excess oil until the oil level on the dipstick is correct.

    Important: **If the oil level in the engine is too low or too high and you run the engine, you may damage the engine.**
11. Install the dipstick into the oil-fill tube securely.
12. Recycle the used oil properly.

Cleaning the Blade-Brake-Clutch Shield

Service Interval: Every 25 hours

Clean the blade-brake-clutch shield yearly to prevent the blade from stalling while you mow.

1. Disconnect the spark-plug wire from the spark plug. Refer to Preparing for Maintenance (page 19).
2. Tip the machine onto its side with the dipstick down.
3. Remove the 2 blade nuts and the stiffener (Figure 34).

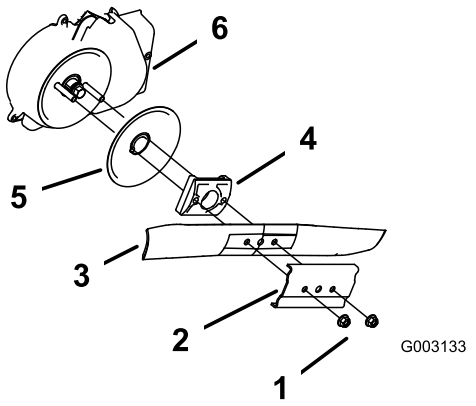

g003133

Figure 34

1. Blade nuts
2. Stiffener
3. Blade
4. Blade driver
5. Disk
6. Blade-brake-clutch shield

4. Remove the blade (Figure 34).
5. Remove the blade driver and disk (Figure 34).
6. Remove the blade-brake-clutch shield (Figure 34).
7. Brush or blow out debris from the inside of the shield and around all the parts.
8. Install the blade-brake-clutch shield that you previously removed.
9. Install the blade driver and disk that you previously removed.
10. Install the blade and the stiffener that you previously removed (Figure 34).
11. Install the blade nuts and torque them to 20 to 37 N·m (15 to 27 ft-lb).

Adjusting the Self-Propel Drive

Whenever you install a new self-propel cable or if the self-propel drive is out of adjustment, adjust the self-propel drive.

1. Turn the adjustment knob counterclockwise to loosen the cable adjustment (Figure 35).

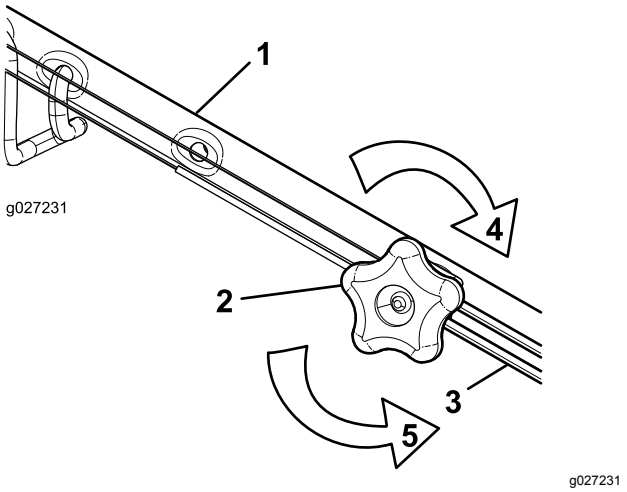

Figure 35

1. Handle (left side)
2. Adjustment knob
3. Self-propel-drive cable
4. Turn the knob clockwise to tighten the adjustment.
5. Turn the knob counterclockwise to loosen the adjustment.

2. Adjust the tension on the cable (Figure 35) by pulling it back or pushing it forward and holding that position.

   Note: Push the cable toward the engine to increase the traction; pull the cable away from the engine to decrease the traction.

3. Turn the adjustment knob clockwise to tighten the cable adjustment.

   Note: Tighten the knob firmly by hand.

Storage

Store the machine in a cool, clean, dry place.

Preparing the Machine for Storage

1. On the last refueling of the year, add fuel stabilizer (such as Toro Premium Fuel Treatment) to the fuel as directed on the label.
2. Dispose of any unused fuel properly. Recycle it according to local codes or use it in your automobile.

   Note: Old fuel in the fuel tank is the leading cause of hard starting. Do not store fuel without fuel stabilizer more than 30 days, and do not store stabilized fuel more than 90 days.
3. Run the machine until the engine shuts off from running out of fuel.
4. Start the engine again and allow it to run until it shuts off. When you can no longer start the engine, it is sufficiently dry.
5. Disconnect the wire from the spark plug and connect the wire to the retaining post (if equipped).
6. Remove the spark plug, add 30 ml (1 fl oz) of engine oil through the spark-plug hole, and pull the starter rope slowly several times to distribute oil throughout the cylinder to prevent cylinder corrosion during the off-season.
7. Loosely install the spark plug.
8. Tighten all nuts, bolts, and screws.

Removing the Machine from Storage

1. Check and tighten all fasteners.
2. Remove the spark plug and spin the engine rapidly by pulling the recoil-start handle to blow the excess oil from the cylinder.
3. Install the spark plug and tighten it with a torque wrench to 20 N·m (15 ft-lb).
4. Perform any maintenance procedures; refer to Maintenance (page 19).
5. Check the engine-oil level; refer to Checking the Engine-Oil Level (page 10).
6. Fill the fuel tank with fresh fuel; refer to Filling the Fuel Tank (page 9).
7. Connect the wire to the spark plug.

Notes:



Count on it.