Form No. 3418-882 Rev A

Super Recycler® Lawn Mower

Model No. 21381—Serial No. 402000000 and Up

Operator's Manual

Introduction

This rotary-blade, walk-behind lawn mower is intended to be used by residential homeowners. It is designed primarily for cutting grass on well-maintained lawns on residential properties. It is not designed for cutting brush or for agricultural uses.

Read this information carefully to learn how to operate and maintain your product properly and to avoid injury and product damage. You are responsible for operating the product properly and safely.

You may contact Toro directly at www.Toro.com for product and accessory information, help finding a dealer, or to register your product.

Whenever you need service, genuine Toro parts, or additional information, contact an Authorized Service Dealer or Toro Customer Service and have the model and serial numbers of your product ready. Figure 1 identifies the location of the model and serial numbers on the product. Write the numbers in the space provided.

Important: **With your mobile device, you can scan the QR code on the serial number decal (if equipped) to access warranty, parts, and other product information.**

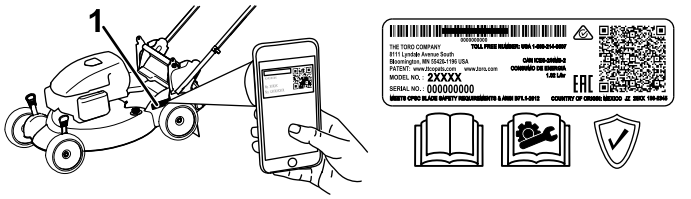

g226624

Figure 1

1. Model and serial number location

Model No. _____

Serial No. _____

This manual identifies potential hazards and has safety messages identified by the safety-alert symbol (Figure 2), which signals a hazard that may cause serious injury or death if you do not follow the recommended precautions.



g000502

Figure 2

Safety-alert symbol

This manual uses 2 words to highlight information. **Important** calls attention to special mechanical information and **Note** emphasizes general information worthy of special attention.

⚠ WARNING

CALIFORNIA
Proposition 65 Warning

This product contains a chemical or chemicals known to the State of California to cause cancer, birth defects, or reproductive harm.

The engine exhaust from this product contains chemicals known to the State of California to cause cancer, birth defects, or other reproductive harm.

It is a violation of California Public Resource Code Section 4442 or 4443 to use or operate the engine on any forest-covered, brush-covered, or grass-covered land unless the engine is equipped with a spark arrester, as defined in Section 4442, maintained in effective working order or the engine is constructed, equipped, and maintained for the prevention of fire.

Gross or Net Torque: The gross or net torque of this engine was laboratory rated by the engine manufacturer in accordance with the Society of Automotive Engineers (SAE) J1940 or J2723. As configured to meet safety, emission, and operating requirements, the actual engine torque on this class of mower will be significantly lower. Please refer to the engine manufacturer's information included with the machine.

Important: **If you are using this machine above 1500 m (5,000 ft) for a continuous period, ensure that the High Altitude Kit has been installed so that the engine meets CARB/EPA emission regulations. The High Altitude Kit increases engine performance while preventing spark-plug fouling, hard starting, and increased emissions.**

© 2017—The Toro® Company
8111 Lyndale Avenue South
Bloomington, MN 55420

Register at www.Toro.com.

Original Instructions (EN)
Printed in Mexico
All Rights Reserved

3418-882 A

Once you have installed the kit, attach the high-altitude label next to the serial decal on the machine. Contact any Authorized Toro Service Dealer to obtain the proper High Altitude Kit and high-altitude label for your machine. To locate a dealer convenient to you, access our website at www.Toro.com or contact our Toro Customer Care Department at the number(s) listed in your Emission Control Warranty Statement.

Remove the kit from the engine and restore the engine to its original factory configuration when running the engine under 1500 m (5,000 ft). Do not operate an engine that has been converted for high-altitude use at lower altitudes; otherwise, you could overheat and damage the engine.

If you are unsure whether or not your machine has been converted for high-altitude use, look for the following label (Figure 3).



Figure 3

Contents

Introduction 1
Safety 3
General Safety 3
Safety and Instructional Decals 3
Setup 5
1 Assembling and Unfolding the Handle 5
2 Installing the Recoil-starter Rope in the Rope Guide 5
3 Filling the Engine with Oil 7
4 Assembling the Grass Bag 7
Product Overview 8
Operation 8
Before Operation 8
Before Operation Safety 8
Filling the Fuel Tank 9
Checking the Engine-Oil Level 10
Adjusting the Handle Height 10
Adjusting the Cutting Height 11
During Operation 12
During Operation Safety 12
Starting the Engine 13
Using the Self-Propel Drive 13
Shutting Off the Engine 13
Recycling the Clippings 14
Bagging the Clippings 15
Discharging the Clippings 17
Operating Tips 19
After Operation 20
After Operation Safety 20
Cleaning under the Machine 20
Folding the Handle 21
Maintenance 22
Recommended Maintenance Schedule(s) 22
Maintenance Safety 22
Preparing for Maintenance 22
Servicing the Air Filter 23
Changing the Engine Oil 23
Lubricating the Wheel Gears 24
Replacing the Blade 24
Adjusting the Self-Propel Drive 25
Storage 26
Preparing the Machine for Storage 26
Removing the Machine from Storage 26

Safety

This machine has been designed in accordance with ANSI B71.1-2012.

General Safety

This product is capable of amputating hands and feet and of throwing objects. Always follow all safety instructions to avoid serious personal injury.

Using this product for purposes other than its intended use could prove dangerous to you and bystanders.

- Read, understand, and follow the instructions and warnings in this *Operator's Manual* and on the machine and attachments before starting the engine.
- Do not put your hands or feet near moving parts of or under the machine. Keep clear of any discharge opening.
- Do not operate the machine without all guards and other safety protective devices in place and working on the machine.
- Keep bystanders and children a safe distance away from the machine. Do not allow children to operate the machine. Allow only people who are responsible, trained, familiar with the instructions, and physically capable to operate the machine.
- Stop the machine, shut off the engine, and wait for all moving parts to stop before servicing, fueling, or unclogging the machine.

Improperly using or maintaining this machine can result in injury. To reduce the potential for injury, comply with these safety instructions and always pay attention to the safety-alert symbol, which means Caution, Warning, or Danger—personal safety instruction. Failure to comply with these instructions may result in personal injury or death.

You can find additional safety information where needed throughout this manual.

Safety and Instructional Decals

Safety decals and instructions are easily visible to the operator and are located near any area of potential danger. Replace any decal that is damaged or missing.

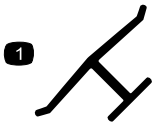

decaloemmarkt

Manufacturer's Mark

1. This mark indicates that the blade is identified as a part from the original machine manufacturer.



decal94-8072

94-8072



decal115-8411

115-8411

1. Unlocked
2. Locked



decal117-2718

117-2718

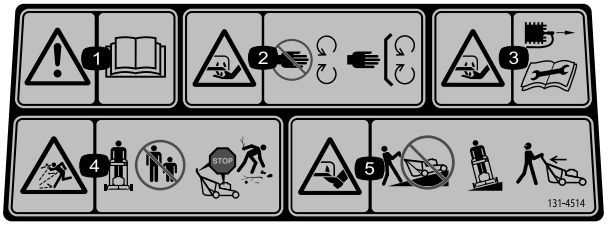

decal131-4514b

131-4514

1. Warning—read the *Operator's Manual*.
2. Cutting/dismemberment hazard of hand, mower blade—stay away from moving parts; keep all guards and shields in place.
3. Cutting/dismemberment hazard of hand, mower blade—disconnect the spark-plug wire and read the instructions before servicing or performing maintenance.
4. Thrown object hazard—keep bystanders a safe distance away from the machine; shut off the engine before leaving the operating position; pick up any debris before mowing.
5. Cutting/dismemberment hazard of foot, mower blade—do not operate up and down slopes; operate side to side on slopes; look behind you when backing up.

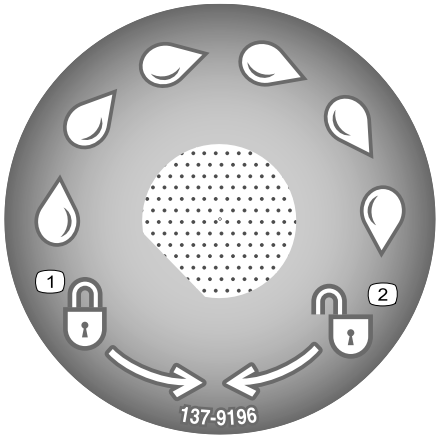

decal137-9196

137-9196

1. Lock
2. Unlock

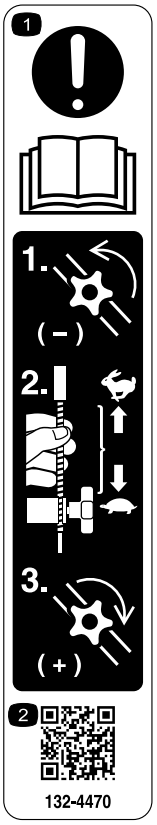

decal132-4470

132-4470

Traction Adjustment

1. Attention; read the *Operator's Manual*—1) Loosen the knob by turning it counterclockwise; 2) Pull the cable(s) away from the engine to decrease the traction, or push the cable(s) toward the engine to increase the traction; 3) Tighten the knob by turning it clockwise.
2. Scan the QR code for more information on traction adjustment.

Setup

Important: **Remove and discard the protective plastic sheet that covers the engine and any other plastic or wrapping on the machine.**

1

Assembling and Unfolding the Handle

No Parts Required

Procedure

⚠ WARNING

Assembling and unfolding the handle improperly can damage the cables, causing an unsafe operating condition.

- **Do not damage the cables when assembling and unfolding the handle.**
- **Ensure that the cables are routed to the outside of the handle.**
- **If a cable is damaged, contact an Authorized Service Dealer.**

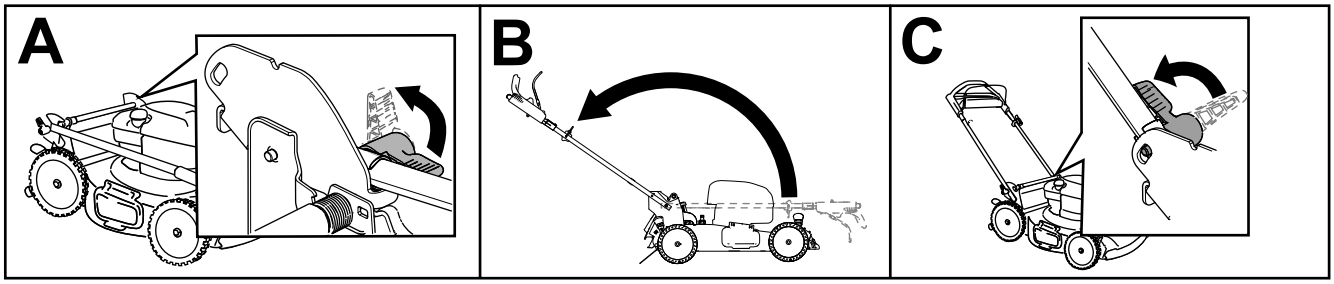

g240249

Figure 4

2

Installing the Recoil-starter Rope in the Rope Guide

No Parts Required

Procedure

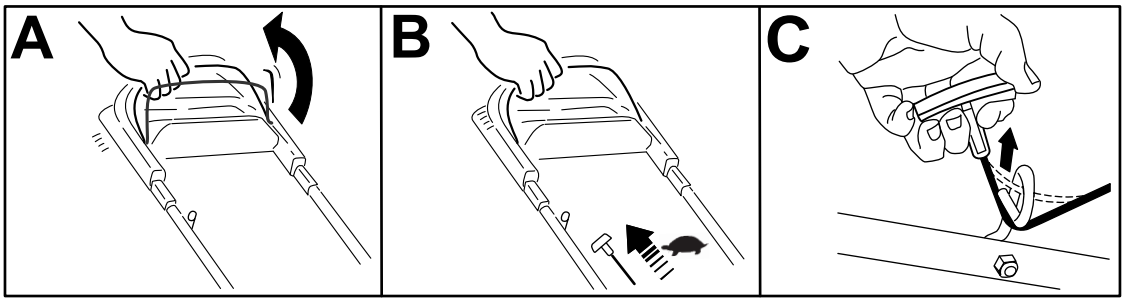

g230719

Figure 5

3

Filling the Engine with Oil

No Parts Required

Procedure

Important: **If the oil level in the crankcase is too low or too high and you run the engine, you may damage the engine.**

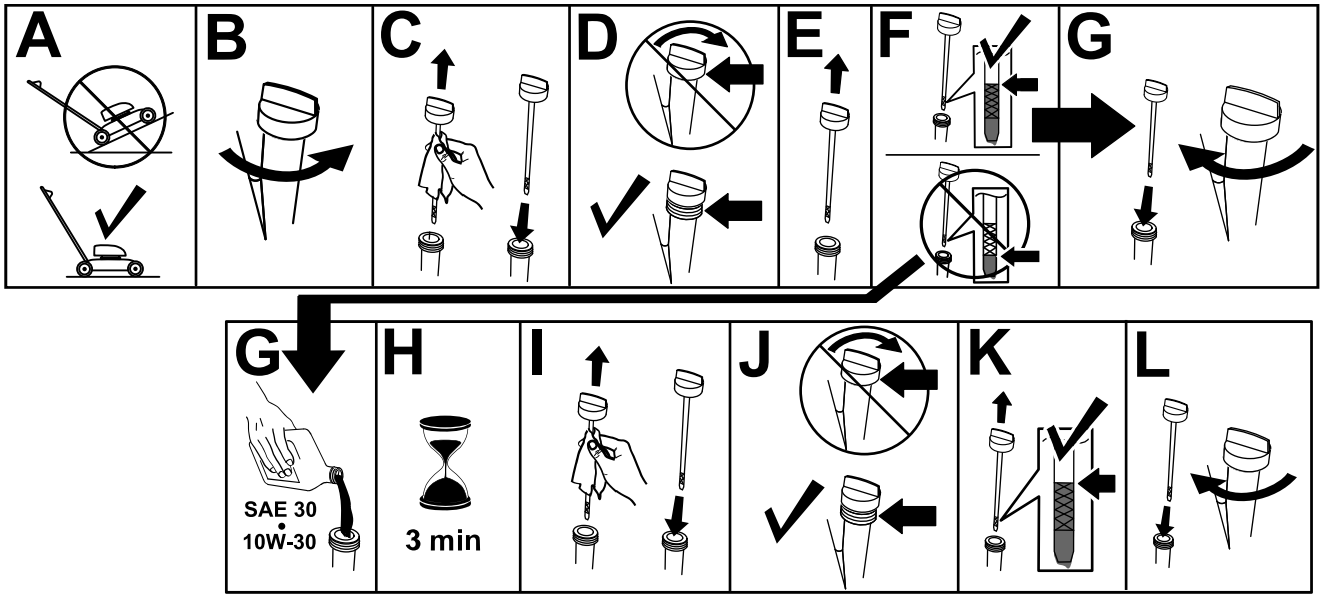

g235721

Figure 6

4

Assembling the Grass Bag

No Parts Required

Procedure

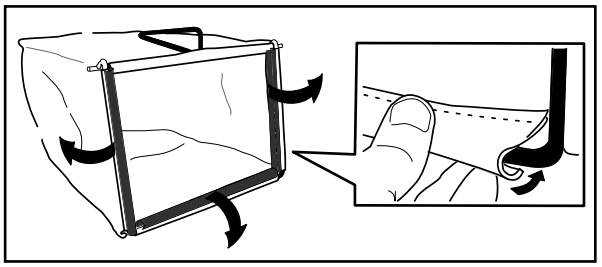

g230447

Figure 7

Product Overview

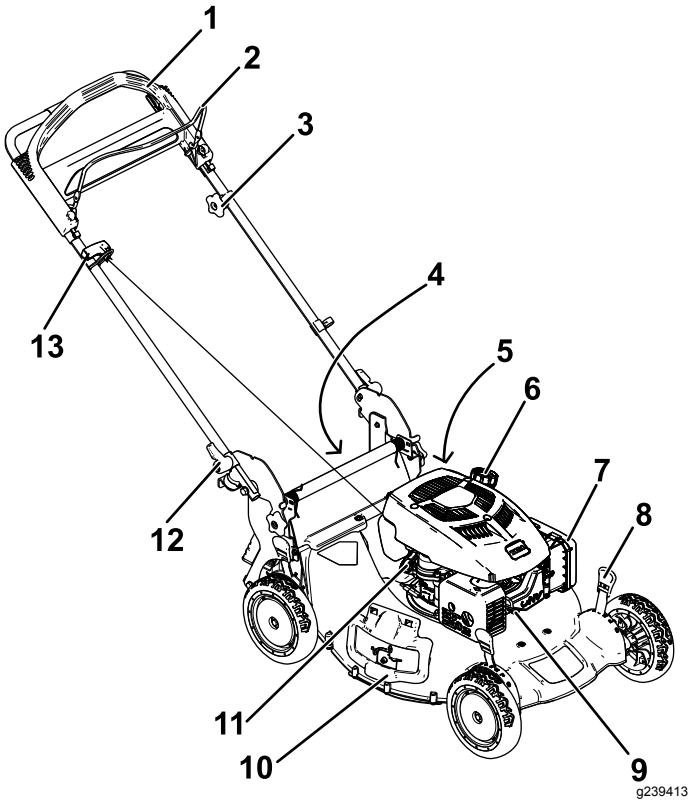

Figure 8

1. Handle
2. Blade-control bar
3. Adjustment knob for the self-propel drive
4. Rear deflector
5. Washout port (not shown)
6. Fuel tank cap
7. Air filter
8. Cutting-height lever (4)
9. Spark plug
10. Side deflector
11. Oil fill/dipstick
12. Handle lever (2)
13. Recoil start handle

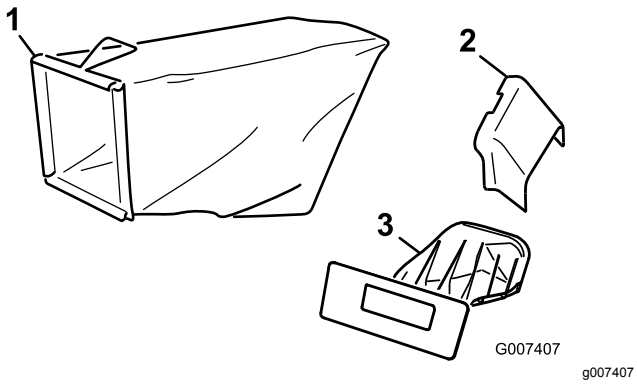

Figure 9

1. Grass bag
2. Side-discharge chute
3. Rear plug (installed)

Operation

Before Operation

Before Operation Safety

General Safety

- Become familiar with the safe operation of the equipment, operator controls, and safety signs.
- Check that all guards and safety devices, such as deflectors and/or grass catcher, are in place and working properly.
- Always inspect the machine to ensure that the blades, blade bolts, and cutting assembly are not worn or damaged.
- Inspect the area where you will use the machine, and remove all objects that could interfere with the operation of the machine or that the machine could throw.
- Adjusting the cutting height may bring you into contact with the moving blade, causing serious injury.
  - Shut off the engine, remove the ignition key (electric-start model only), and wait for all moving parts to stop.
  - Do not put your fingers under the housing when adjusting the cutting height.

Fuel Safety

- Fuel is extremely flammable and highly explosive. A fire or explosion from fuel can burn you and others and can damage property.
  - To prevent a static charge from igniting the fuel, place the container and/or machine directly on the ground before filling, not in a vehicle or on an object.
  - Fill the fuel tank outdoors, in an open area, when the engine is cold. Wipe up any fuel that spills.
  - Do not handle fuel when smoking or around an open flame or sparks.
  - Do not remove the fuel cap or add fuel to the tank while the engine is running or hot.
  - If you spill fuel, do not attempt to start the engine. Avoid creating a source of ignition until the fuel vapors have dissipated.
  - Store fuel in an approved container and keep it out of the reach of children.
- Fuel is harmful or fatal if swallowed. Long-term exposure to vapors can cause serious injury and illness.

– Avoid prolonged breathing of vapors.
– Keep your hands and face away from the nozzle and the fuel-tank opening.
– Keep fuel away from your eyes and skin.

Filling the Fuel Tank

- For best results, use only clean, fresh, unleaded gasoline with an octane rating of 87 or higher ((R+M)/2 rating method).
- Oxygenated fuel with up to 10% ethanol or 15% MTBE by volume is acceptable.
- **Do not** use ethanol blends of gasoline, such as E15 or E85, with more than 10% ethanol by volume. Performance problems and/or engine damage may result, which may not be covered under warranty.
- **Do not** use gasoline containing methanol.
- **Do not** store fuel either in the fuel tank or in fuel containers over the winter unless fuel stabilizer has been added to the fuel.
- **Do not** add oil to gasoline.

Fill the fuel tank with fresh unleaded regular gasoline from a major name-brand service station (Figure 10).

Important: **To reduce starting problems, add fuel stabilizer to the gasoline all season. Mix the stabilizer with gasoline less than 30 days old.**

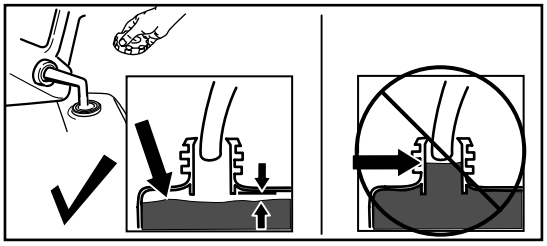

g230458

Figure 10

Checking the Engine-Oil Level

Service Interval: Before each use or daily

Important: **If the oil level in the crankcase is too low or too high and you run the engine, you may damage the engine.**

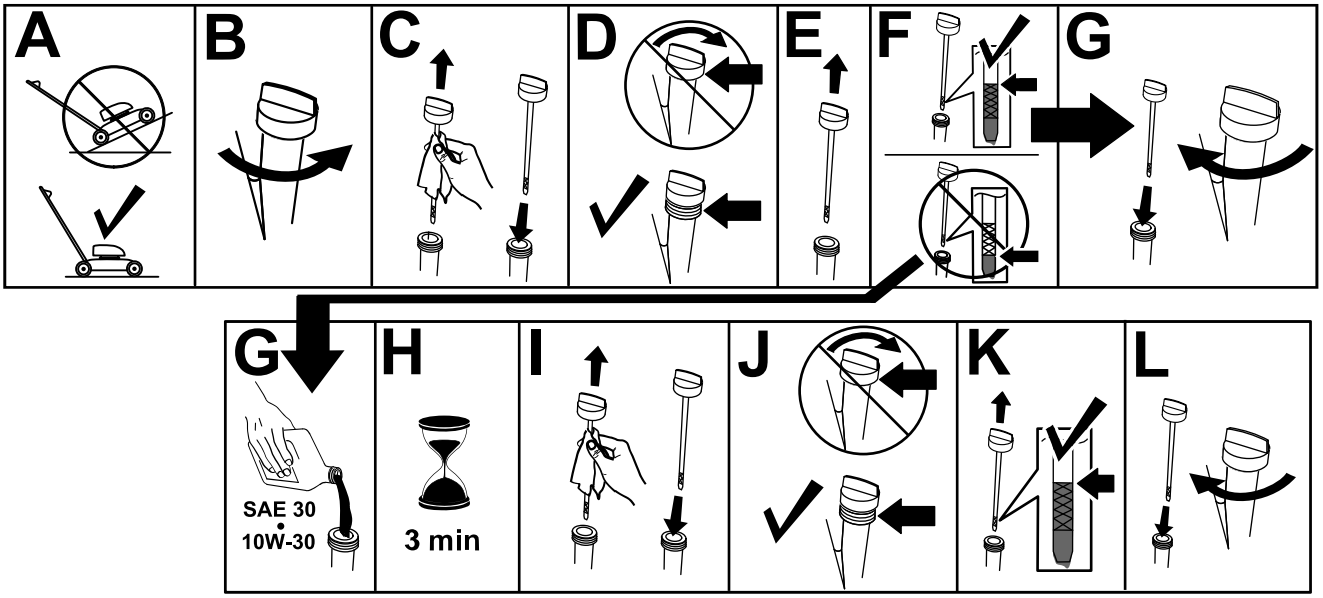

g235721

Figure 11

Adjusting the Handle Height

You may raise or lower the handle to a position comfortable for you.

Rotate the handle lock, move the handle to 1 of 3 positions, and lock the handle into position (Figure 12).

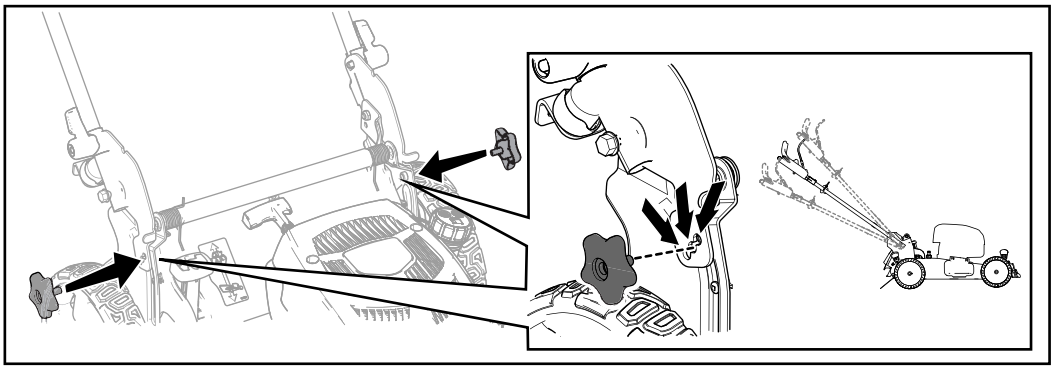

g238410

Figure 12

Adjusting the Cutting Height

⚠ WARNING

Adjusting the cutting height may bring you into contact with the moving blade, causing serious injury.

- **Shut off the engine and wait for all moving parts to stop.**
- **Do not put your fingers under the housing when adjusting the cutting height.**

⚠ CAUTION

If the engine has been running, the muffler will be hot and can severely burn you.

Keep away from the hot muffler.

Adjust the cutting height as desired. Set all 4 wheels to the same height. To raise and lower the machine, refer to Figure 13.

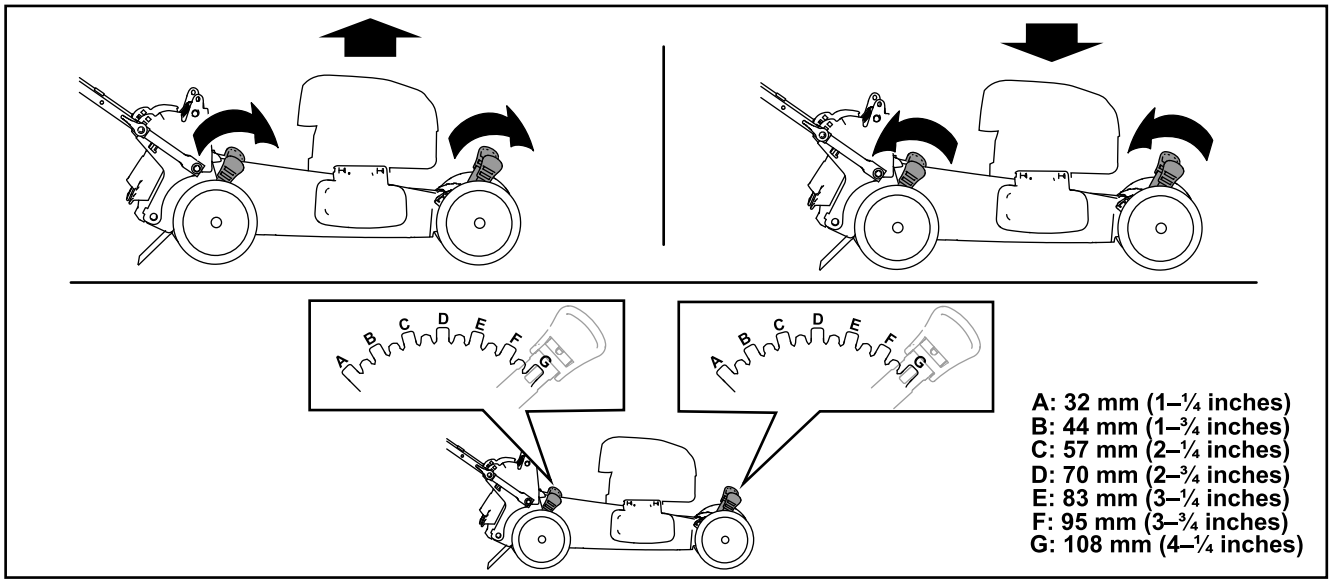

g225876

Figure 13

During Operation

During Operation Safety

General Safety

- Wear appropriate clothing, including eye protection; long pants; slip-resistant, substantial footwear; and hearing protection. Tie back long hair, secure loose clothing, and do not wear loose jewelry.
- Do not operate the machine while ill, tired, or under the influence of alcohol or drugs.
- The blade is sharp; contacting the blade can result in serious personal injury. Shut off the engine, remove the ignition key (electric-start model only), and wait for all moving parts to stop before leaving the operating position.
- When you release the blade-control bar, the engine should shut off and the blade should stop within 3 seconds. If not, stop using your machine immediately and contact an Authorized Service Dealer.
- Keep bystanders, especially small children, out of the operating area. Stop the machine if anyone enters the area.
- Always look down and behind you before moving the machine in reverse.
- Operate the machine only in good visibility and appropriate weather conditions. Do not operate the machine when there is the risk of lighting.
- Wet grass or leaves can cause serious injury if you slip and contact the blade. Avoid mowing in wet conditions.
- Use extreme care when approaching blind corners, shrubs, trees, or other objects that may block your view.
- Watch for holes, ruts, bumps, rocks, or other hidden objects. Uneven terrain could cause the machine to overturn or cause you to lose your balance or footing.
- If the machine strikes an object or starts to vibrate, immediately shut off the engine, remove the key (if equipped), wait for all moving parts to stop, and disconnect the wire from the spark plug before examining the machine for damage. Make all necessary repairs before resuming operation.
- Before leaving the operating position, shut off the engine, remove the ignition key (electric-start model only), and wait for all moving parts to stop.
- If the engine has been running the muffler will be hot and can severely burn you. Keep away from the hot muffler.
- Check the grass catcher components and the discharge chute frequently for any wear or deterioration and replace them with the manufacturer's recommended parts when necessary.
- Use accessories and attachments approved by The Toro® Company only.

Slope Safety

- Mow across the face of slopes; never up and down. Use extreme caution when changing direction on slopes.
- Do not mow on excessively steep slopes. Poor footing could cause a slip-and-fall accident.
- Mow with caution near drop-offs, ditches, or embankments.

Starting the Engine

1. Pull the blade-control bar to the handle and hold it (A of Figure 14).
2. Pull the recoil-start handle (B of Figure 14) lightly until you feel resistance, then pull it sharply, and allow it to return to the rope guide on the handle slowly.

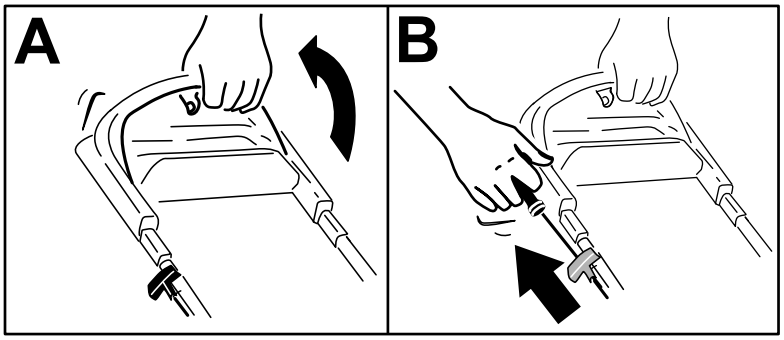

g231913

Figure 14

Note: If the machine does not start after several attempts, contact an Authorized Service Dealer.

Using the Self-Propel Drive

To operate the self-propel drive, simply walk with your hands on the upper handle and your elbows at your sides, and the machine will automatically keep pace with you (Figure 15).

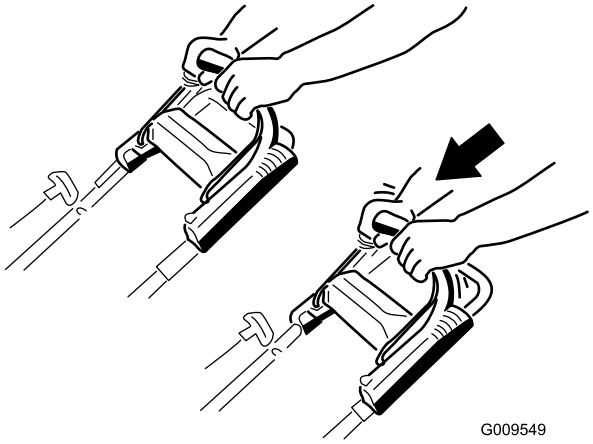

G009549

g009549

Figure 15

Note: If the machine does not freely roll backward after self-propelling, stop walking, hold your hands in place, and allow the machine to roll a couple of centimeters (inches) forward to disengage the wheel drive. You can also try reaching just under the upper handle to the metal handle and push the machine forward a couple of centimeters (inches). If the machine still does not roll backward easily, contact an Authorized Service Dealer.

Shutting Off the Engine

Service Interval: Before each use or daily

To shut off the engine, release the blade-control bar.

Important: **When you release the blade-control bar, both the engine and blade should stop within 3 seconds. If they do not stop properly, stop using your machine immediately and contact an Authorized Service Dealer.**

Recycling the Clippings

Your machine comes from the factory ready to recycle the grass and leaf clippings back into the lawn.

If the side-discharge chute is on the machine, remove it and lock the side-discharge door; refer to Removing the Side-Discharge Chute (page 18) before recycling the clippings.

Important: **Ensure that the rear plug is locked in place. To lock the plug, raise the rear door, firmly push the plug in until it snaps into place behind the tabs (A of Figure 16), and rotate the lever on the plug to the left (B of Figure 16).**

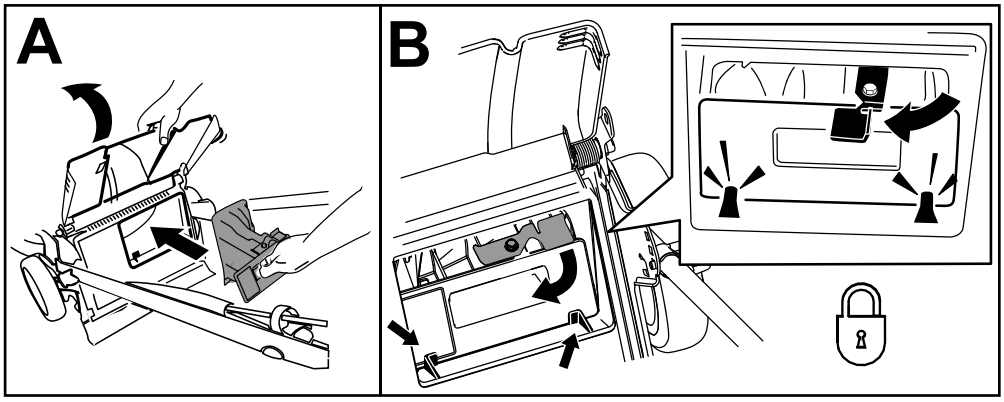

g239445

Figure 16

Note: To unlock the rear plug, rotate the lever on the plug to the right (Figure 17).

Bagging the Clippings

Use the grass bag when you want to collect grass and leaf clippings from the lawn.

If the side-discharge chute is on the machine, remove it and lock the side-discharge deflector; refer to Removing the Side-Discharge Chute (page 18).

Installing the Grass Bag

1. Raise and hold up the rear deflector and unlock the rear plug (A of Figure 17).
2. Pull out the rear plug (B of Figure 17).
3. Hang the upper front edge of the bag from the grass-bag pins on the notches of the handle brackets (C of Figure 17).
4. Lower the rear deflector.

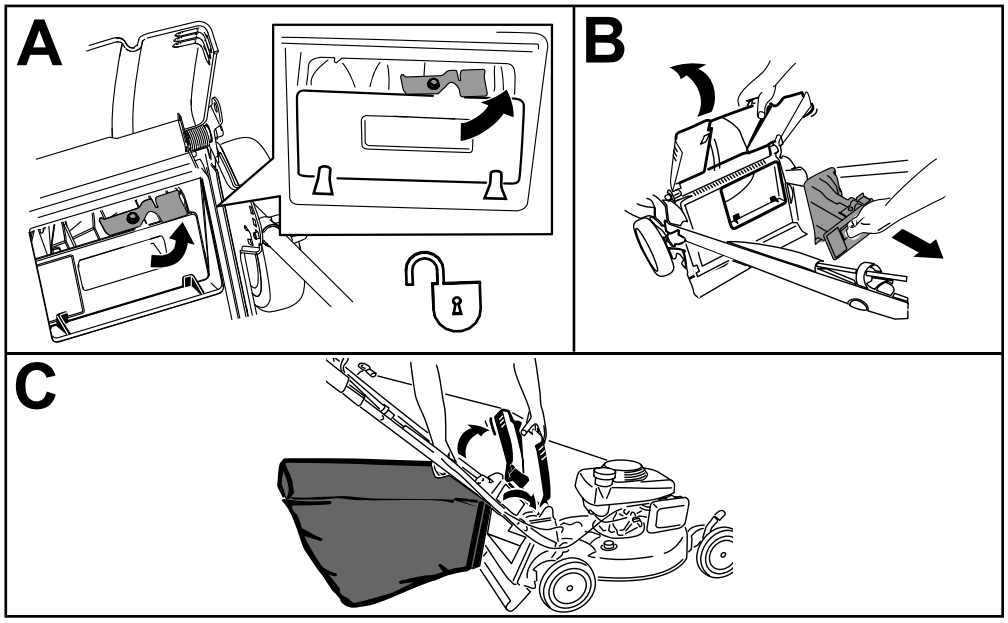

g240403

Figure 17

Removing the Grass Bag

1. Raise and hold up the rear deflector and lift the grass bag up by the handle off the notches of the handle brackets (A of Figure 18.
2. Install the rear plug (B of Figure 18).

   Important: **Ensure that the rear plug is locked in place. To lock the plug, firmly push the plug in until it snaps into place behind the tabs, and rotate the lever on the plug to the left (C of Figure 18).**

   Note: To unlock the plug, rotate the lever on the plug to the right.
3. Lower the rear deflector.

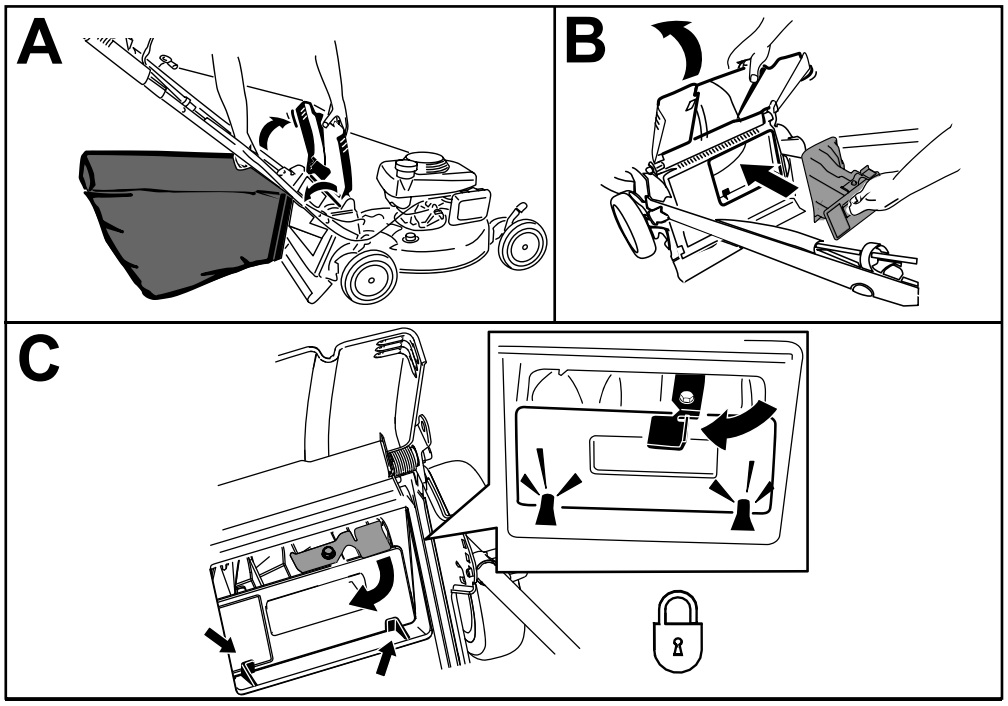

g240401

Figure 18

Discharging the Clippings

Side-discharge the clippings when cutting very tall grass.

⚠ WARNING

The blade is sharp; contacting the blade can result in serious personal injury.

Shut off the engine and wait for all moving parts to stop before leaving the operating position.

Side-Discharging the Clippings

If the bag is on the machine, remove it and insert the rear plug; refer to Removing the Grass Bag (page 16).

Important: **Ensure that the rear plug is locked in place. To lock the plug, raise the rear deflector (Figure 19), firmly push the plug in until it snaps into place behind the tabs, and rotate the lever on the plug to the left (Figure 19).**

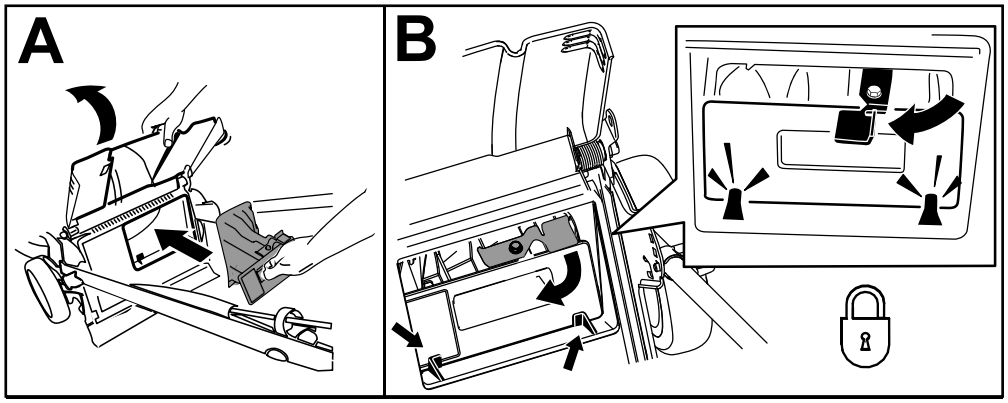

g231918

Figure 19

Note: To unlock the plug, rotate the lever on the plug to the right.

Installing the Side-Discharge Chute

1. Unlock the side-discharge deflector (A of Figure 20).
2. Lift open the side-discharge deflector (B of Figure 20).
3. Install the side-discharge chute and close the deflector onto the chute (B, C, and D of Figure 20).

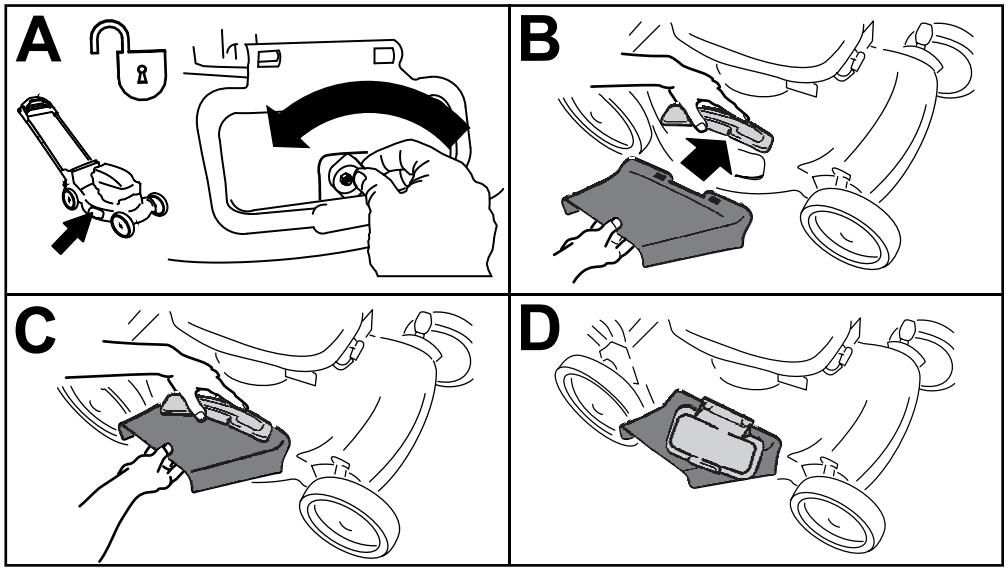

g231920

Figure 20

Removing the Side-Discharge Chute

To remove the side-discharge chute, reverse the steps above.

Important: **Lock the side-discharge deflector after you close it (Figure 21).**

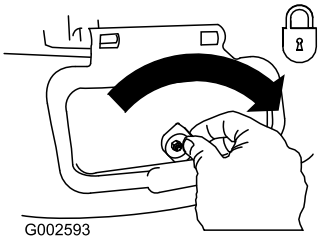

g002593

Figure 21

Operating Tips

General Mowing Tips

- Inspect the area where you will use the machine and remove all objects that the machine could throw.
- Avoid striking solid objects with the blade. Never deliberately mow over any object.
- If the machine strikes an object or starts to vibrate, immediately shut off the engine, remove the key (if equipped), disconnect the wire from the spark plug, and examine the machine for damage.
- For best performance, install a new blade before the cutting season begins.
- Replace the blade when necessary with a Toro replacement blade.

Cutting Grass

- Cut only about a third of the grass blade at a time. Do not cut below 51 mm (2 inches) unless the grass is sparse or it is late fall when grass growth begins to slow down.
- When cutting grass over 15 cm (6 inches) tall, mow at the highest cutting height setting and walk slower; then mow again at a lower setting for the best lawn appearance. If the grass is too long, the machine may plug and cause the engine to stall.
- Wet grass and leaves tend to clump on the yard and can cause the machine to plug or the engine to stall. Avoid mowing in wet conditions.
- Be aware of a potential fire hazard in very dry conditions, follow all local fire warnings, and keep the machine free of dry grass and leaf debris.
- Alternate the mowing direction. This helps disperse the clippings over the lawn for even fertilization.
- If the finished lawn appearance is unsatisfactory, try 1 or more of the following:
  - Replace the blade or have it sharpened.
  - Walk at a slower pace while mowing.
  - Raise the cutting height on your machine.
  - Cut the grass more frequently.
  - Overlap cutting swaths instead of cutting a full swath with each pass.

Cutting Leaves

- After cutting the lawn, ensure that half of the lawn shows through the cut leaf cover. You may need to make more than a single pass over the leaves.
- If there are more than 13 cm (5 inches) of leaves on the lawn, mow at a higher cutting height and then again at the desired cutting height.
- Slow down your mowing speed if the machine does not cut the leaves finely enough.

After Operation

After Operation Safety

General Safety

- Clean grass and debris from the machine to help prevent fires. Clean up oil or fuel spills.
- Allow the engine to cool before storing the machine in any enclosure.
- Never store the machine or fuel container where there is an open flame, spark, or pilot light, such as on a water heater or on other appliances.

Hauling Safety

- Remove the ignition key (if equipped) before loading the machine for hauling.
- Use care when loading or unloading the machine.
- Secure the machine from rolling.

Cleaning under the Machine

Service Interval: Before each use or daily

⚠ WARNING

The machine may dislodge material from under the machine.

- **Wear eye protection.**
- **Stay in the operating position (behind the handle) when the engine is running.**
- **Do not allow bystanders in the area.**

For best results, clean the machine soon after you have completed mowing.

1. Lower the machine to the lowest cutting-height setting. Refer to Adjusting the Cutting Height (page 11).
2. Move the machine onto a level surface.
3. Wash out the area under the rear door (if applicable) where the clippings go from the underside of the machine to the grass bag.
4. Attach a garden hose that is connected to a water supply to the washout port (Figure 22).

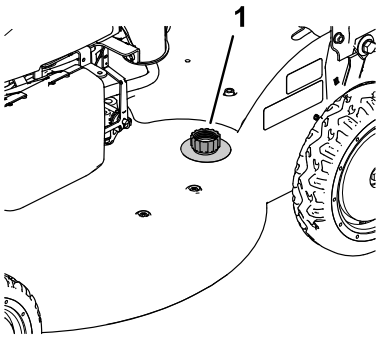

g189103

Figure 22

1. Washout port

5. Turn the water on.
6. Start the engine and run it until there are no more clippings that come out from under the machine.
7. Shut off the engine.
8. Shut off the water and disconnect the garden hose from the machine.
9. Start the engine and run it for a few minutes to dry the underside of the machine.
10. Shut off the engine and allow it to cool.

Folding the Handle

1. Rotate the handle forward (Figure 23).

   Important: **Route the cables to the outside of the handle knobs as you fold the upper handle.**

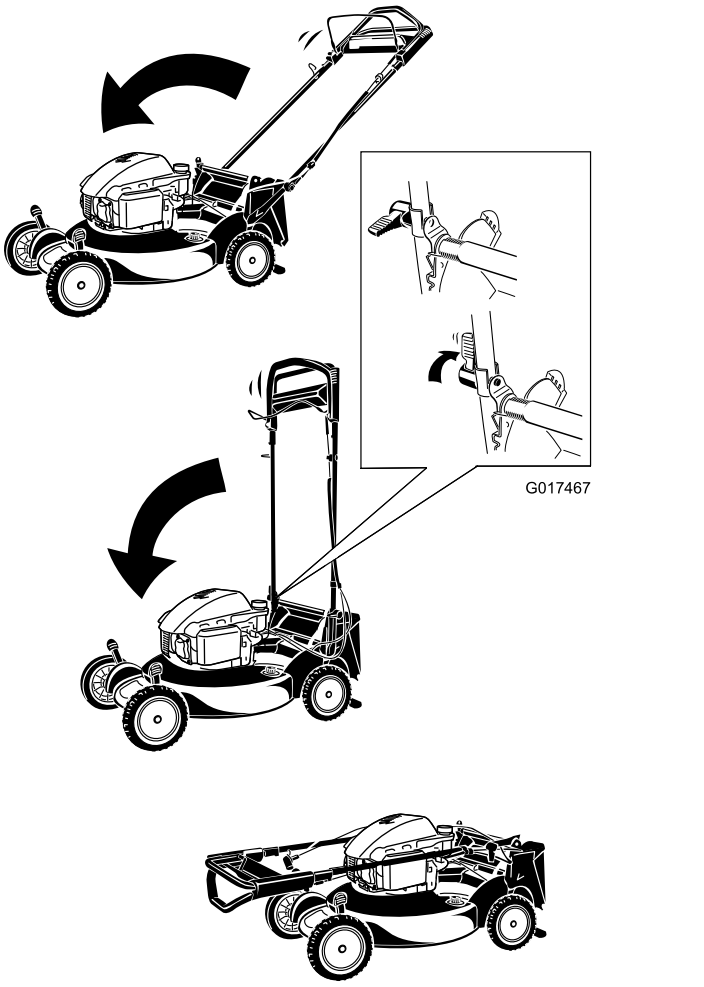

Figure 23

2. To unfold the handle, refer to 1 Assembling and Unfolding the Handle (page 5).

Maintenance

Note: Determine the left and right sides of the machine from the normal operating position.

Recommended Maintenance Schedule(s)

Maintenance Service Interval	Maintenance Procedure
After the first 5 hours	• Change the engine oil.
Before each use or daily	• Check the engine oil level. • Ensure that the engine shuts off within 3 seconds after releasing the blade-control bar. • Clean grass clippings and dirt from under the machine.
Every 25 hours	• Lubricate the rear wheel gears.
Yearly	• Service the air filter. • Change the engine oil. • Replace the blade or have it sharpened (more frequently if the edge dulls quickly). • Clean the engine by removing dirt and debris from its top and sides; clean it more frequently in dusty operating conditions.
Yearly or before storage	• Empty the fuel tank before repairs as directed and before yearly storage.

Maintenance Safety

- Disconnect the spark-plug wire from the spark plug before performing any maintenance procedure.
- Wear gloves and eye protection when servicing the machine.
- The blade is sharp; contacting the blade can result in serious personal injury. Wear gloves when servicing the blade. Do not repair or alter the blade(s).
- Never tamper with safety devices. Check their proper operation regularly.
- Tipping the machine may cause the fuel to leak. Fuel is flammable and explosive, and can cause personal injury. Run the engine dry or remove the fuel with a hand pump; never siphon the fuel.
- To ensure optimum performance and continued safety certification of the machine, use only genuine Toro replacement parts and accessories. Replacement parts and accessories made by other manufacturers could be dangerous, and such use could void the product warranty.

Preparing for Maintenance

1. Shut off the engine and wait for all moving parts to stop.
2. Disconnect the spark-plug wire from the spark plug (Figure 24).

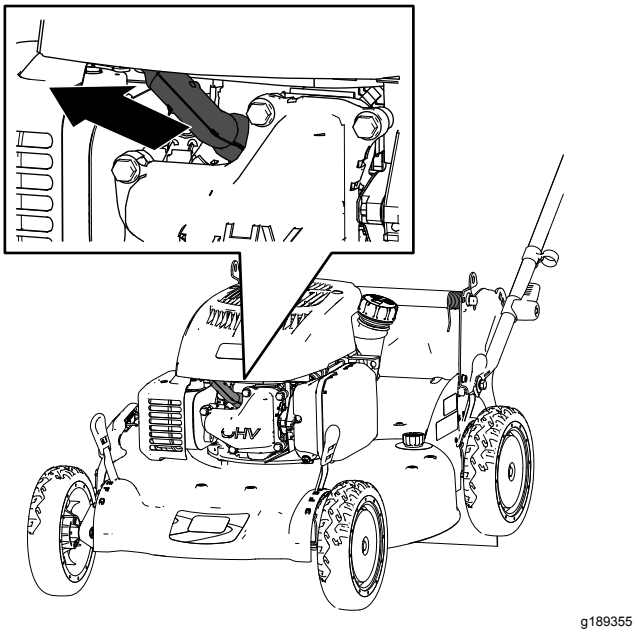

g189355

Figure 24

3. After performing the maintenance procedure(s), connect the spark-plug wire to the spark plug.

Important: **Before tipping the machine to change the oil or replace the blade, allow the fuel tank to run dry through normal usage. If you must tip the machine prior to running out of fuel, use a hand fuel pump to remove the fuel. Always tip the machine onto its side, with the dipstick down.**

Servicing the Air Filter

Service Interval: Yearly

1. Press down on the latch tabs on top of the air-filter cover (Figure 25).

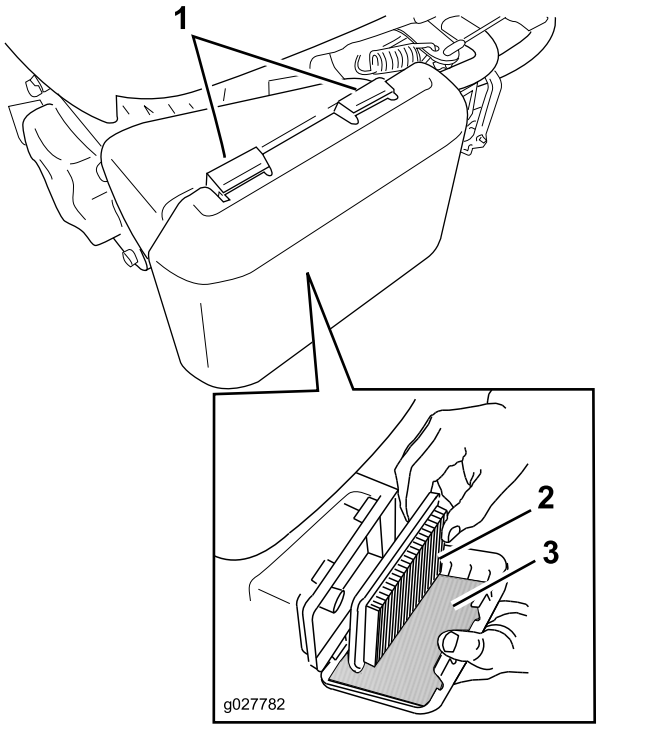

g027782

Figure 25

1. Latch tabs
2. Paper air filter
3. Foam pre-filter

2. Open the cover.
3. Remove the paper air filter and the foam pre-filter (Figure 25).
4. Inspect the foam pre-filter, and replace it if it is damaged or excessively dirty.
5. Inspect the paper air filter.
   - If the air filter is damaged or is wet with oil or fuel, replace it.
   - If the air filter is dirty, tap it on a hard surface several times or blow compressed air less than 207 kPa (30 psi) through the side of the filter that faces the engine.

   Note: Do not brush the dirt off the filter; brushing forces dirt into the fibers.
6. Remove the dirt from the air-filter body and the cover using a moist rag.

   Important: **Do not wipe dirt into the air duct.**
7. Install the foam pre-filter and the paper air filter into the air filter.
8. Install the cover.

Changing the Engine Oil

Service Interval: After the first 5 hours

Yearly

Note: Run the engine a few minutes before changing the oil to warm it. Warm oil flows better and carries more contaminants.

Engine Oil Specifications

Engine oil capacity	0.55 L (18.6 fl oz)
Oil viscosity	SAE 30 or SAE 10W-30 detergent oil
API service classification	SJ or higher

1. Move the machine to a level surface.
2. Refer to Preparing for Maintenance (page 22).
3. Remove the dipstick by rotating the cap counterclockwise and pulling it out (Figure 26).

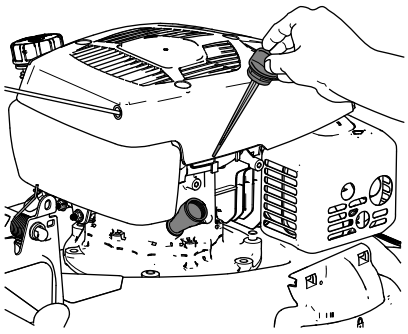

g189387

Figure 26

4. Tip the machine onto its side (so that the air filter is up) to drain the used oil from the oil-fill tube (Figure 27).

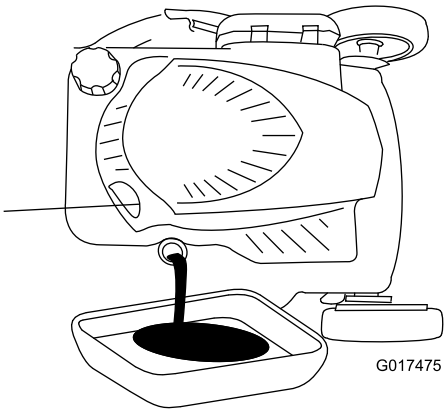

g017475

Figure 27

5. After draining the used oil, return the machine to the operating position.
6. Carefully pour about 3/4 of the engine capacity of oil into the oil-fill tube.

7. Wait 3 minutes for the oil to settle in the engine.
8. Wipe the dipstick clean with a clean cloth.
9. Insert the dipstick into the oil-fill tube, **but do not screw it in,** then remove the dipstick.
10. Read the oil level on the dipstick (Checking the Engine-Oil Level (page 10)).
    - If the oil level on the dipstick is too low, carefully pour a small amount of oil into the oil-fill tube, wait 3 minutes, and repeat steps 8 through 10 until the oil level on the dipstick is correct.
    - If the oil level on the dipstick is too high, drain the excess oil until the oil level on the dipstick is correct.

    Important: **If the oil level in the engine is too low or too high and you run the engine, you may damage the engine.**
11. Install the dipstick into the oil-fill tube securely.
12. Recycle the used oil properly.

Lubricating the Wheel Gears

Service Interval: Every 25 hours

1. Wipe the grease fittings just inside the rear wheels with a clean rag (Figure 28).

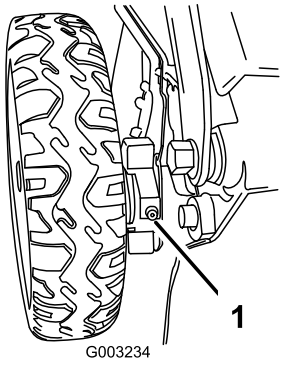

g003234

Figure 28

1. Grease fitting

2. Install a grease gun onto each fitting and gently apply 2 or 3 pumps of No. 2 lithium grease.

Replacing the Blade

Service Interval: Yearly

Important: ***You will need a torque wrench to install the blade properly.*** **If you do not have a torque wrench or are uncomfortable performing this procedure, contact an Authorized Service Dealer.**

Examine the blade whenever you run out of fuel. If the blade is damaged or cracked, replace it immediately. If the blade edge is dull or nicked, have it sharpened and balanced, or replace it.

⚠ WARNING

The blade is sharp; contacting the blade can result in serious personal injury.

Wear gloves when servicing the blade.

1. Refer to Preparing for Maintenance (page 22).
2. Tip the machine onto its side with the air filter up.
3. Use a block of wood to hold the blade steady (Figure 29).

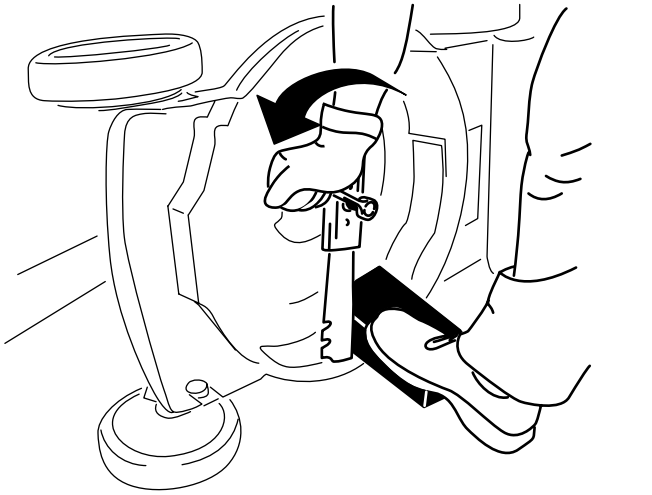

g231389

Figure 29

4. Remove the blade, saving all mounting hardware (Figure 29).
5. Install the new blade and all mounting hardware (Figure 30).

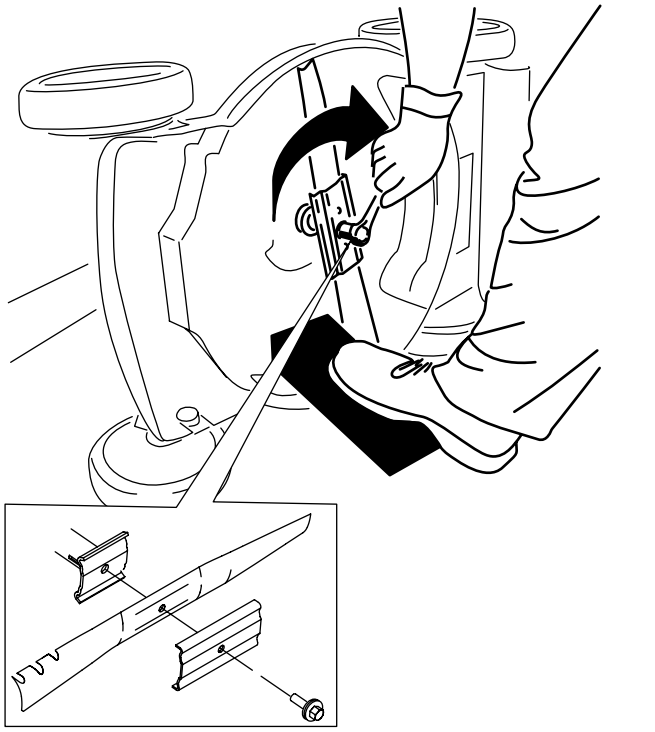

g231390

Figure 30

Important: **Position the curved ends of the blade to point toward the machine housing.**

6. **Use a torque wrench to tighten the blade bolt to 82 N·m (60 ft-lb).**

   Important: **A bolt torqued to 82 N·m (60 ft-lb) is very tight. While holding the blade with a block of wood, put your weight behind the ratchet or wrench and tighten the bolt securely. This bolt is very difficult to overtighten.**

Adjusting the Self-Propel Drive

Whenever you install a new self-propel cable or if the self-propel drive is out of adjustment, adjust the self-propel drive.

1. Turn the adjustment knob counterclockwise to loosen the cable adjustment (Figure 31).

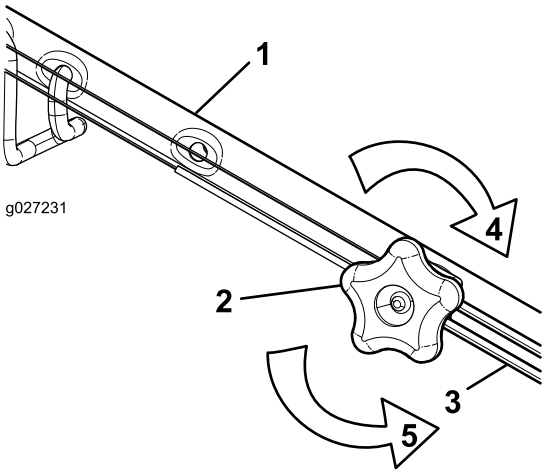

g027231

g027231

Figure 31

1. Handle (left side)
2. Adjustment knob
3. Self-propel-drive cable
4. Turn the knob clockwise to tighten the adjustment.
5. Turn the knob counterclockwise to loosen the adjustment.

2. Adjust the tension on the cable (Figure 31) by pulling it back or pushing it forward and holding that position.

   Note: Push the cable toward the engine to increase the traction; pull the cable away from the engine to decrease the traction.

3. Turn the adjustment knob clockwise to tighten the cable adjustment.

   Note: Tighten the knob firmly by hand.

Storage

Store the machine in a cool, clean, dry place.

Preparing the Machine for Storage

1. On the last refueling of the year, add fuel stabilizer (such as Toro Premium Fuel Treatment) to the fuel as directed on the label.
2. Dispose of any unused fuel properly. Recycle it according to local codes or use it in your automobile.

   Note: Old fuel in the fuel tank is the leading cause of hard starting. Do not store fuel without fuel stabilizer more than 30 days, and do not store stabilized fuel more than 90 days.
3. Run the machine until the engine shuts off from running out of fuel.
4. Start the engine again and allow it to run until it shuts off. When you can no longer start the engine, it is sufficiently dry.
5. Disconnect the wire from the spark plug and connect the wire to the retaining post (if equipped).
6. Remove the spark plug, add 30 ml (1 fl oz) of engine oil through the spark-plug hole, and pull the starter rope slowly several times to distribute oil throughout the cylinder to prevent cylinder corrosion during the off-season.
7. Loosely install the spark plug.
8. Tighten all nuts, bolts, and screws.

Removing the Machine from Storage

1. Check and tighten all fasteners.
2. Remove the spark plug and spin the engine rapidly by pulling the recoil-start handle to blow the excess oil from the cylinder.
3. Install the spark plug and tighten it with a torque wrench to 20 N·m (15 ft-lb).
4. Perform any maintenance procedures; refer to Maintenance (page 22).
5. Check the engine-oil level; refer to Checking the Engine-Oil Level (page 10).
6. Fill the fuel tank with fresh fuel; refer to Filling the Fuel Tank (page 9).
7. Connect the wire to the spark plug.

Notes:



Count on it.