Form No. 3419-799 Rev A

TUV Speed Decal Kit

ProLine H800 Rotary Mower

Model No. 02969

Installation Instructions

Loose Parts

Use the chart below to verify that all parts have been shipped.

Description	Qty.	Use
Speed decal sign	3	Install the speed decal kit.
Rivet	6	
Bolt	2	
Washer	2	
Lock nut	2	

Prepare the Machine

1. Park the machine on a level surface and set the parking brake.
2. Lower the cutting units and the hopper.
3. Shut off the engine and remove the key.

Installing the Kit

1. Using a speed decal sign as a template, mark the location of the holes where the signs will be installed on each side of the hopper.
2. Drill a 3/16 inch (5mm) hole at each mark made in step 1.
3. Using the holes drilled in step 2, install a speed decal sign to each side of the hopper with rivets (Figure 1).

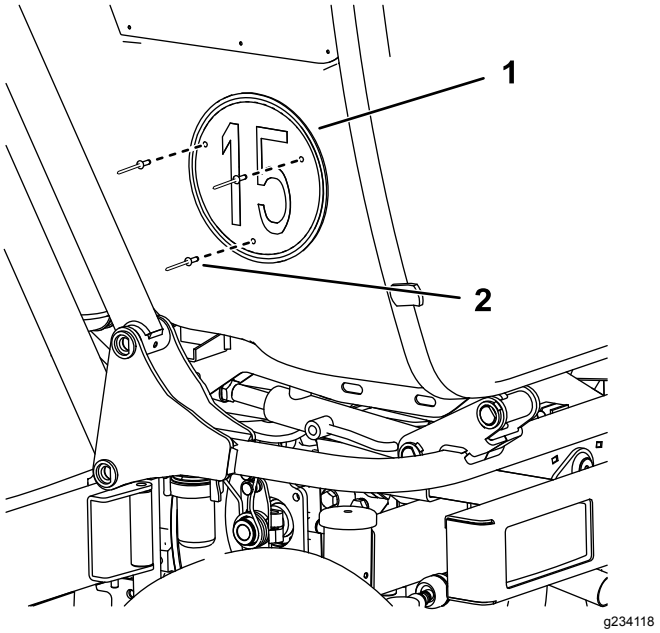

Figure 1

Left side shown

1. Decal sign (both sides)
2. Rivets

© 2017—The Toro® Company
8111 Lyndale Avenue South
Bloomington, MN 55420

Register at www.Toro.com.

CE

Original Instructions (EN)
Printed in the USA
All Rights Reserved

3419-799 A

4. Install the decal sign to the rear bumper using the bolts, washers, locknuts, and bolt caps (Figure 2).

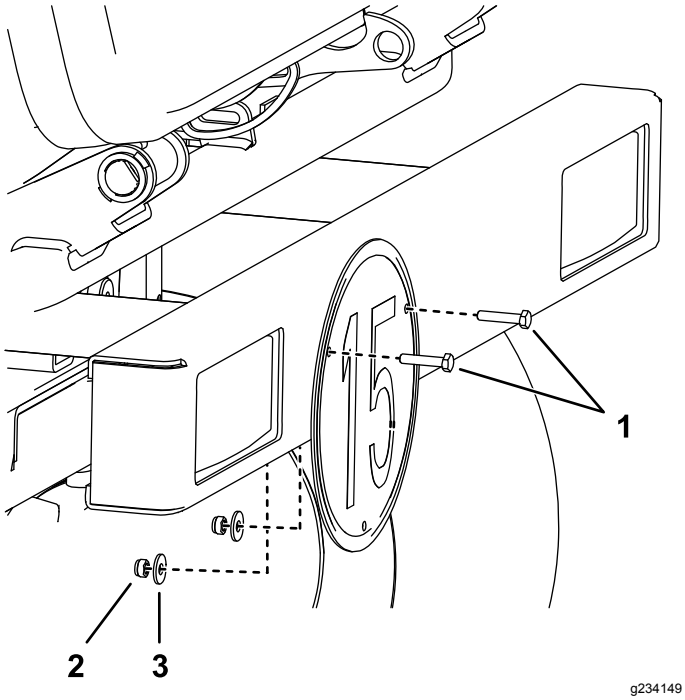

Figure 2

1. Bolts
2. Locknuts
3. Washers