Form No. 3385-214 Rev D

TORO®

Count on it.

Parts Catalog

Power Clear® 518 ZE Snowthrower

Model No. 38473—Serial No. 315000001 and Up

Register at www.Toro.com.
Original Instructions (EN)

3385-214 D

Ordering Replacement Parts

To order replacement parts, please supply the part number, the quantity, and the description of each part desired.

Understanding Reference Numbers

Each identified part in an illustration has a reference number. The reference number for a part also appears in the parts list, along with other information about the part.

This catalog uses two special reference number formats, one to indicate parts in a service assembly and another to indicate the quantity of a given part in an illustration.

Service Assembly Reference Numbers

Parts in service assemblies have reference numbers in the form a:b. The a represents the reference number of the entire service assembly and the b represents a sequential number unique to each part within the service assembly.

For example, a wheel assembly might be identified by reference number 6, the tire by 6:1, the valve by 6:2, and the wheel by 6:3. When you order the assembly identified by reference number 6, you receive all parts identified by reference numbers 6:1,6:2, and 6:3. However, you may also order any part individually. Reference numbers of this type appear in illustration and in parts lists.

Reference Numbers Indicating Quantity

In an illustration, if a reference number indicates more than one part, the reference number has the form nX y. The n represents the quantity of the part, the X is the multiplication symbol, and the y represents the reference number.

For example, in an illustration, the reference number 2X 37 means that two of the parts identified by reference number 37 are indicated.

Contents

Main Frame and Wheel Assembly 4
Auger Housing Assembly 6
Rotor Drive Assembly 8
Belt and Drive Assembly 10
Engine Assembly 12
Engine Assembly No. 1 14
Engine Assembly No. 2 16
Engine Assembly No. 3 18
Shroud Assembly 20
Handle Assembly 22
Deflector Chute Control Assembly 24
Attachments and Accessories 26

© 2017—The Toro® Company
8111 Lyndale Avenue South
Bloomington, MN 55420

Contact us at www.Toro.com.
Printed in the USA.
All Rights Reserved

Main Frame and Wheel Assembly

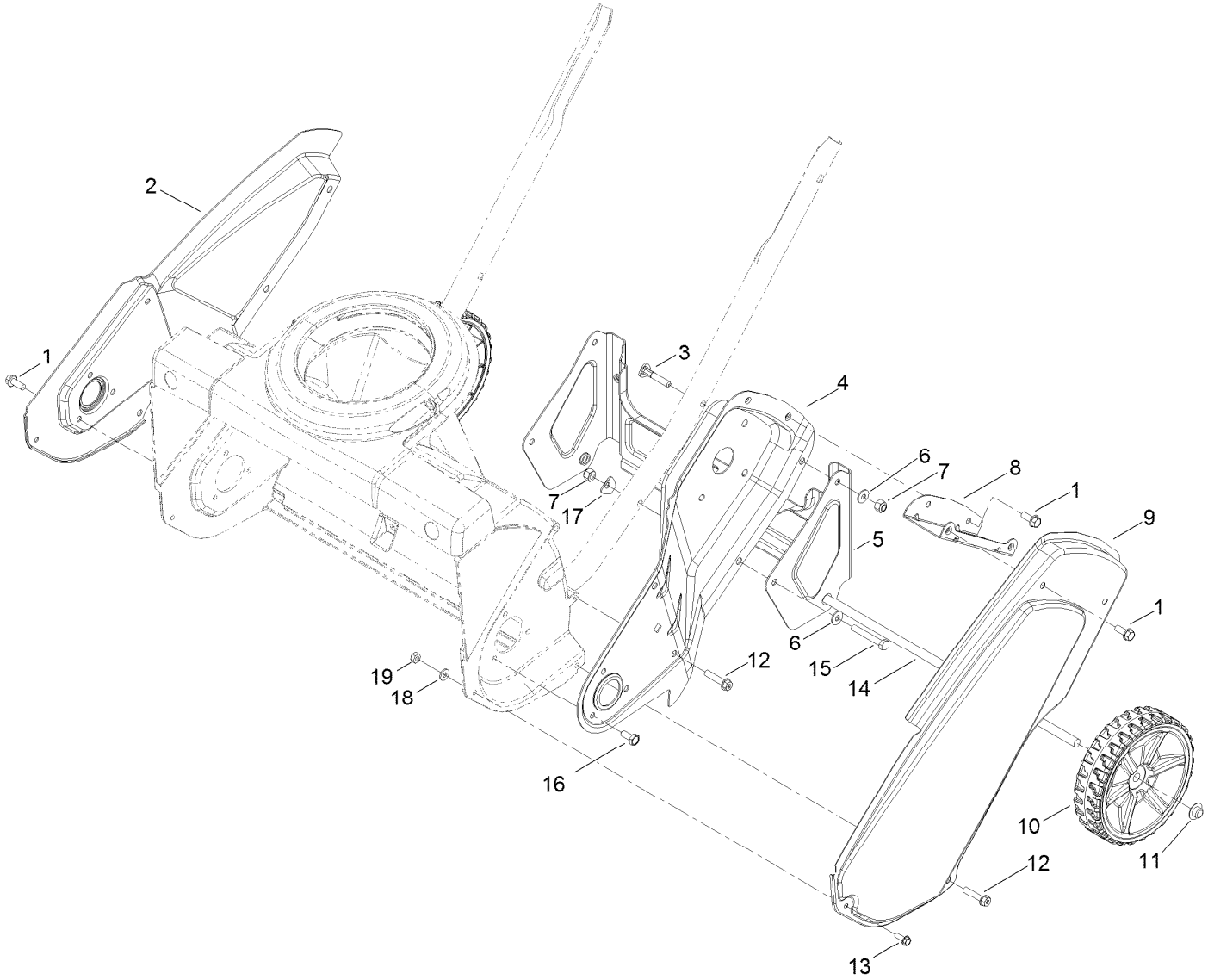

Main Frame and Wheel Assembly (continued)

Ref.	Part Number	Qty.	Description
1	32144-85	7	Screw-HWH
2	117-7704-03	1	Sideplate-RH
3	117-7737	2	Screw-Handle
4	117-2349-03	1	Sideplate-LH
5	117-7702-03	1	Bracket-Wheel
6	3256-1	4	Washer-Flat
7	3296-73	4	Nut-Lock, NI
8	117-2334-03	1	Bracket-Cover, Belt
9	117-7703-03	1	Cover-Belt
10	117-2306	2	Wheel ASM
11	3290-320	2	Nut-Push
12	46-8094	6	Screw-Plastic
13	32105-23	2	Screw
14	117-2339	1	Axle
15	321-53	2	Screw-HH
16	114-9291	3	Screw-HH, Taptite
17	3-7501	2	Washer
18	3256-14	2	Washer-Flat
19	3296-2	2	Nut-Lock, NI

Auger Housing Assembly

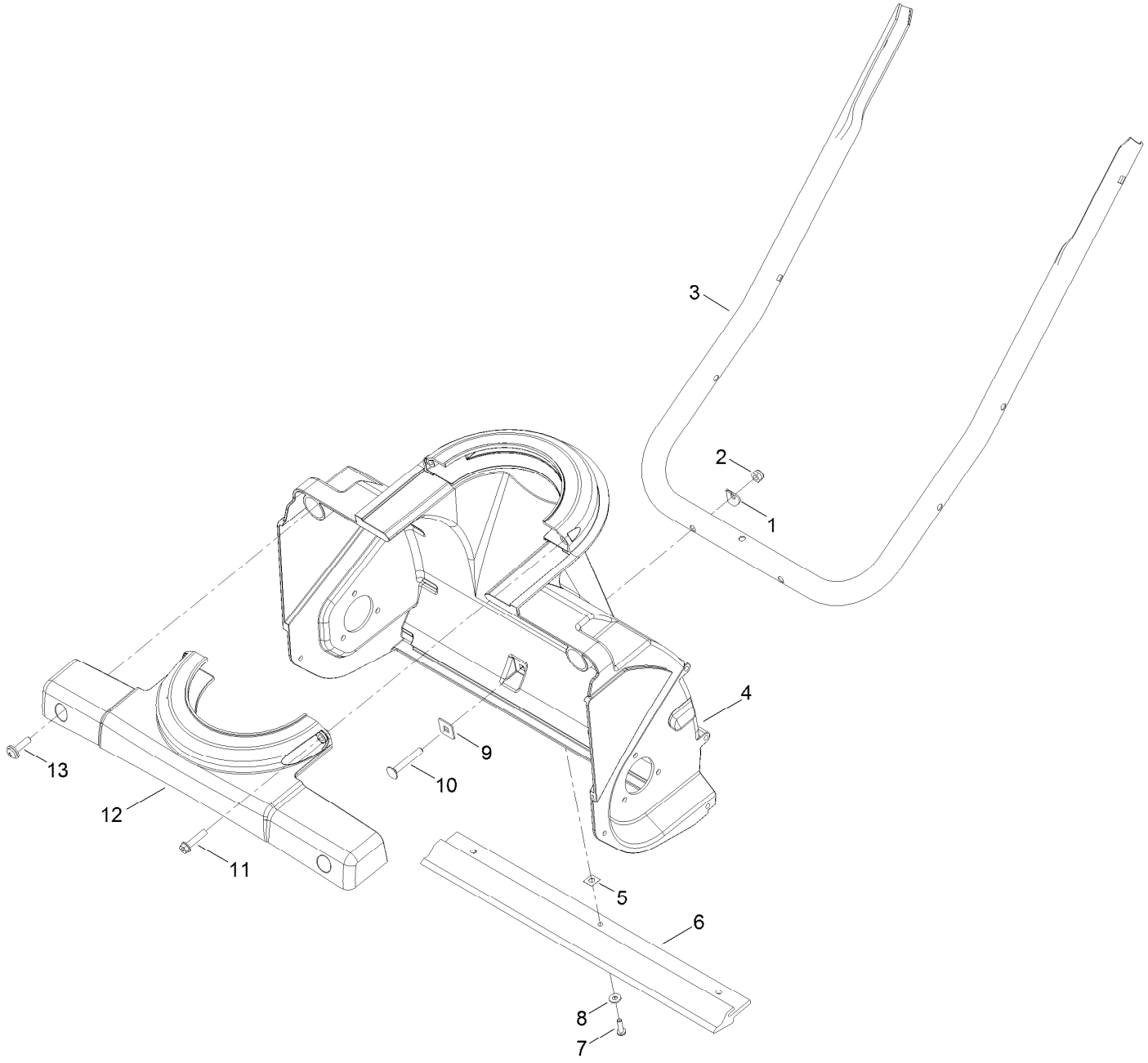

Auger Housing Assembly (continued)

Ref.	Part Number	Qty.	Description
1	3-7501	2	Washer
2	3296-73	2	Nut-Lock, NI
3	117-2348-03	1	Handle-Lower
4	117-2331	1	Housing-Lower
5	32115-19	3	Nut-Clip, U
6	117-7717	1	Scraper
7	32144-34	3	Screw-HWHTF
8	3256-14	3	Washer-Flat
9	75-9040	2	Washer-Square
10	3229-5	2	Screw-CARR
11	46-8094	2	Screw-Plastic
12	117-2332	1	Retainer-Chute
13	110-9361	2	Screw-PPH

Rotor Drive Assembly

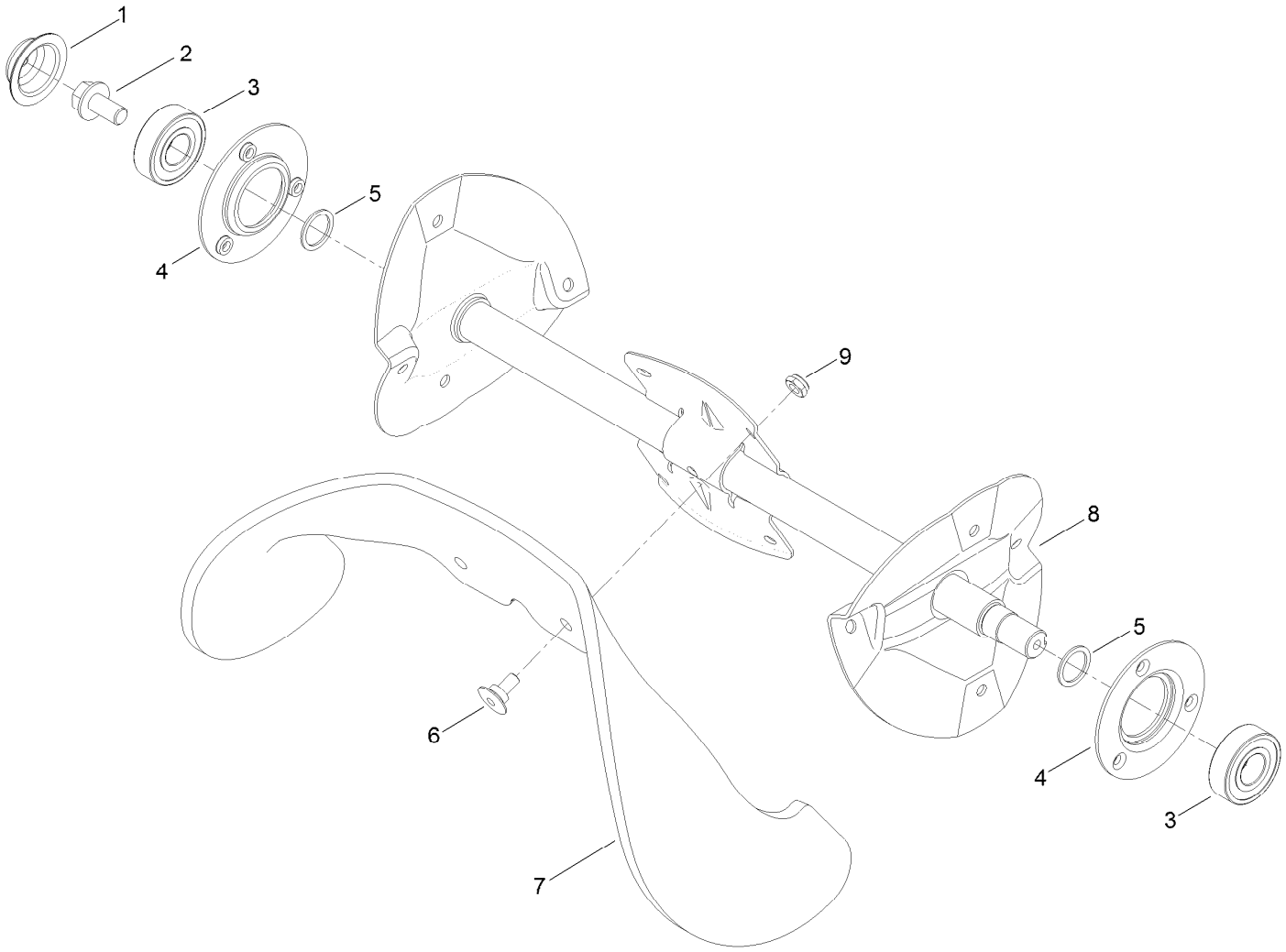

Rotor Drive Assembly (continued)

Ref.	Part Number	Qty.	Description
1	117-7720	1	Cap-Sideplate, RH
2	110-9380	1	Screw-HWH
3	100-1048	2	Bearing-Ball
4	112-8105	2	Flange-Bearing
5	52-7280	2	Washer-Thrust
6	84-1970	12	Screw
7	117-7700	2	Blade-Rotor
8	117-2315-03	1	Rotor ASM
9	3296-56	12	Nut-Lock, NI

Belt and Drive Assembly

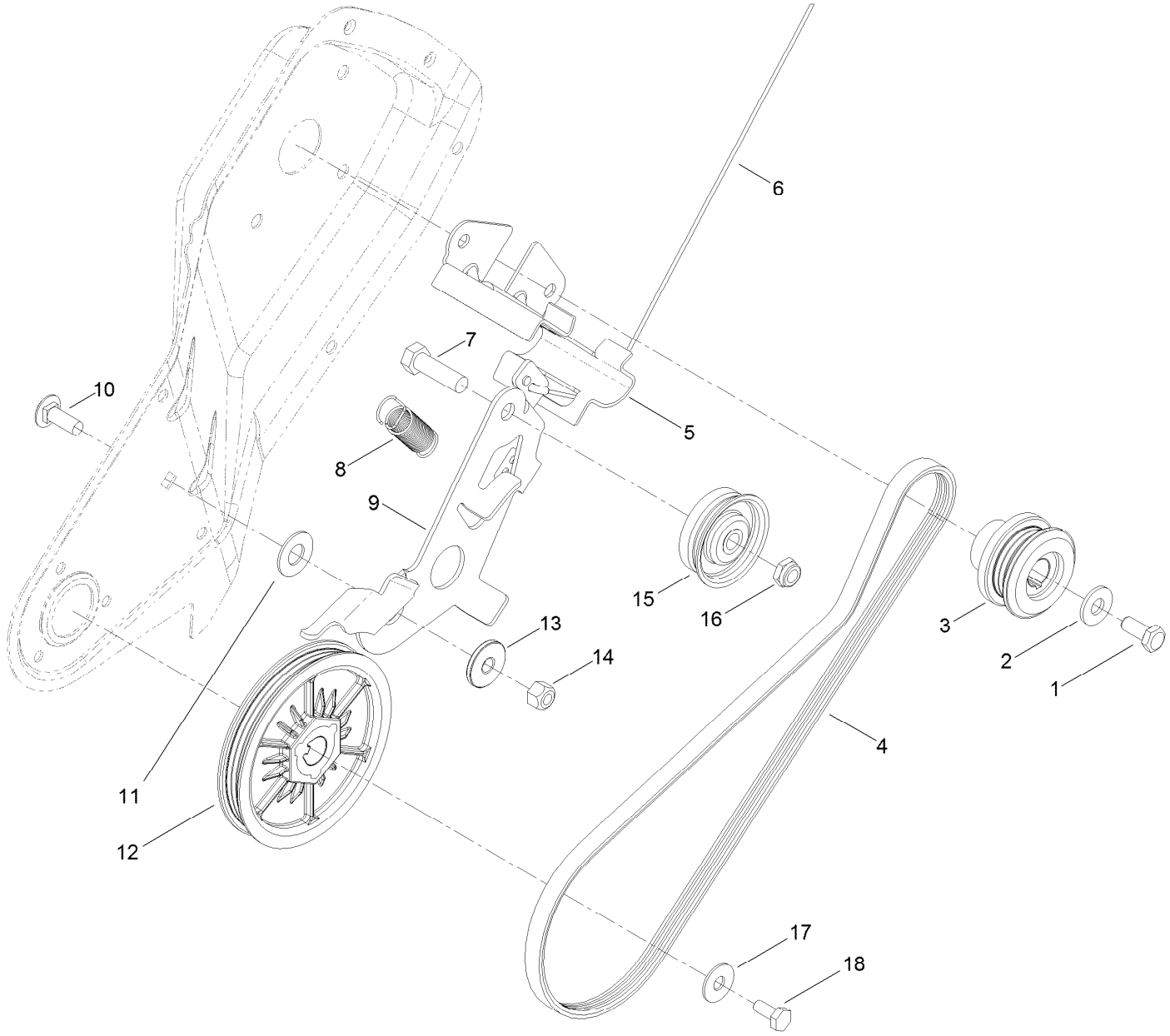

Belt and Drive Assembly (continued)

Ref.	Part Number	Qty.	Description
1	3235-6	1	Screw-HH
2	3256-71	1	Washer-Flat
3	117-7734	1	Pulley-Engine
4	117-7733	1	Belt-V, Ribbed
5	119-2907	1	Guide-Belt
6	117-7721	1	Cable-Clutch
7	323-44	1	Screw-HH
8	117-7715	1	Spring-Brake
9	117-7735	1	Arm-Idler
10	3230-10	1	Bolt-CARR
11	25-5640	1	Washer
12	117-7732	1	Rotor Pulley ASM
13	117-7711	1	Bushing-Idler
14	3296-29	1	Nut-Lock, NI
15	117-9105	1	Pulley-Idler
16	3296-59	1	Nut-Lock, NI
17	3290-456	1	Washer-Belleville
18	110-9381	1	Screw-HH

Engine Assembly

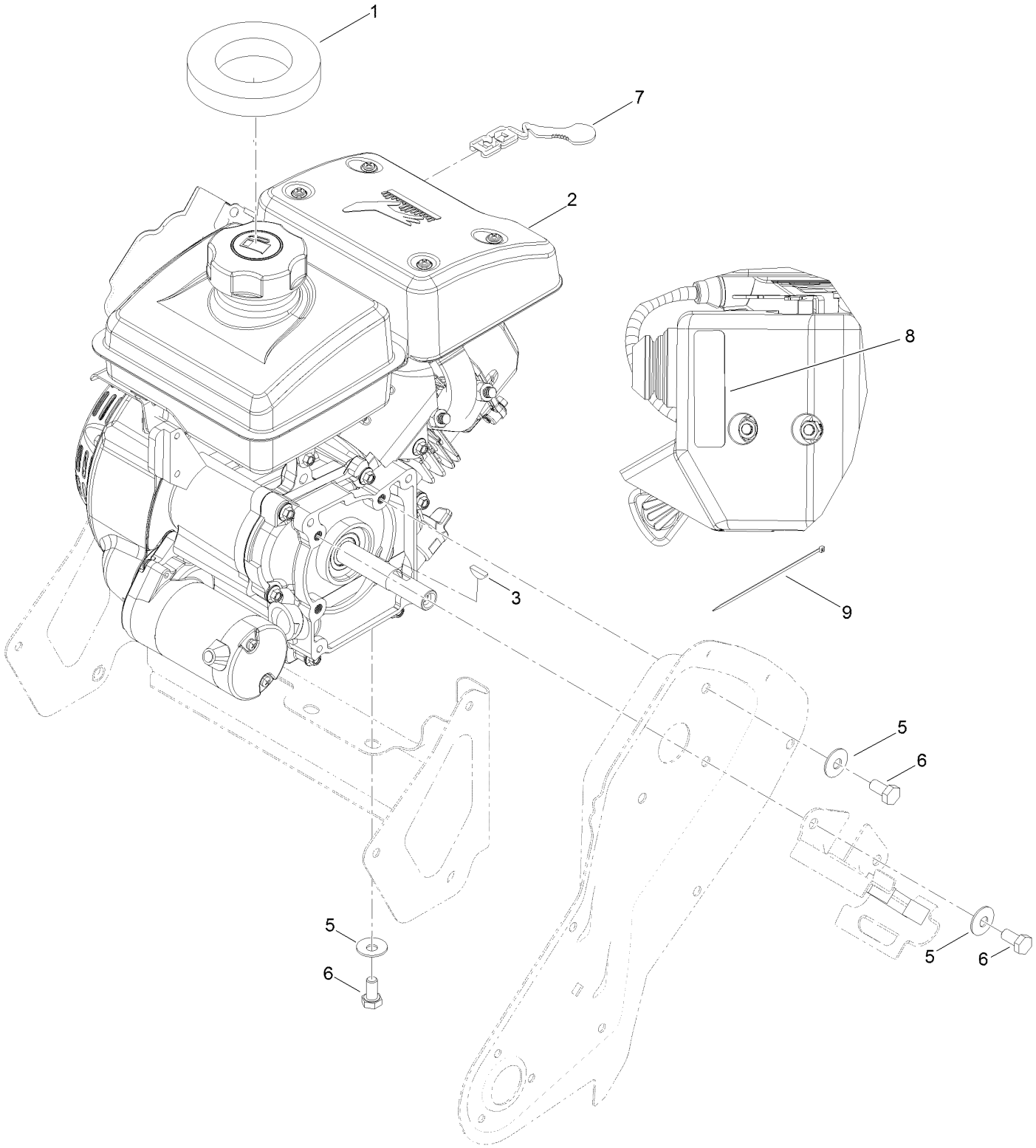

Engine Assembly (continued)

Ref.	Part Number	Qty.	Description
1	117-7723	1	Seal-Tank
2	121-4231	1	Engine-156Fds
3	3257-3	1	Key-Woodruff
5	3290-456	6	Washer-Belleville
6	33114-016	6	Screw-HH
7	117-7727	1	Lever-Choke
8	120-0149	1	Decal-Controls, Engine
9	614249	1	Tie-Cable

Engine Assembly No. 1

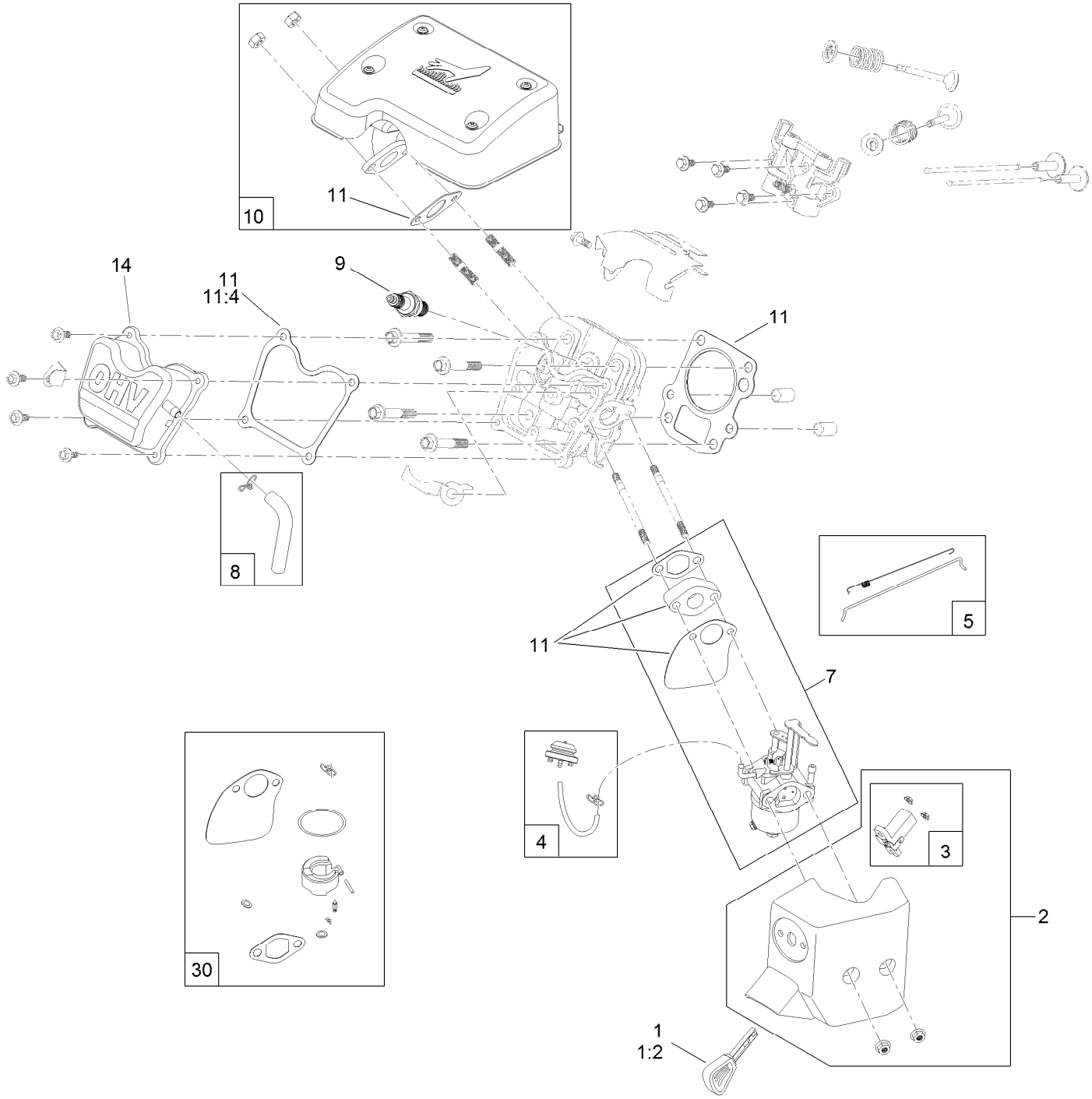

Engine Assembly No. 1 (continued)

Ref.	Part Number	Qty.	Description
1	119-1929	1	Key And Lanyard Kit
1:2	117-7728	2	Key
2	119-1982	1	Heater Box Kit
3	119-1932	1	Switch Kit
4	119-1981	1	Primer Bulb Kit
5	127-9074	1	Governor Kit
7	127-9053	1	Complete Carb Service Kit
8	119-1921	1	Breather Tube Kit
9	119-1961	1	Spark Plug
10	119-1938	1	Muffler Kit
11	127-9073	1	Gasket, Seal And O-Ring Kit
11:4	121-0110	1	Gasket-Cover, Valve
14	121-0466	1	Valve Cover ASM
30	127-9158	1	Carburetor Repair Kit

Engine Assembly No. 2

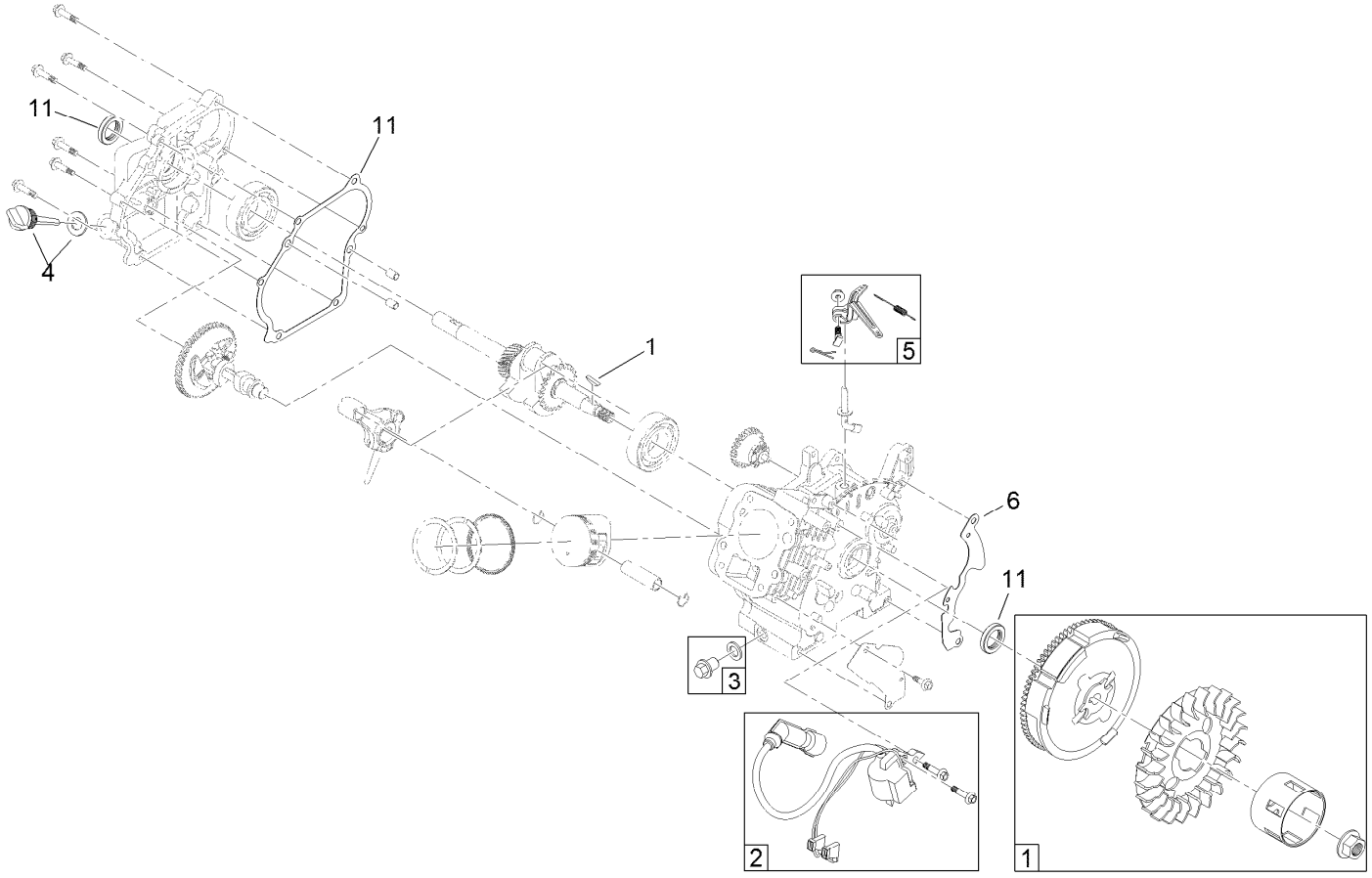

Engine Assembly No. 2 (continued)

Ref.	Part Number	Qty.	Description
1	119-1933	1	Flywheel Kit
2	119-1960	1	Ignition Kit
3	119-1923	1	Drain Plug Kit
4	119-1922	1	Dipstick And O-Ring Kit
5	127-9074	1	Governor Kit
6	119-1926	1	Blower Shroud Kit
11	127-9073	1	Gasket, Seal And O-Ring Kit

Engine Assembly No. 3

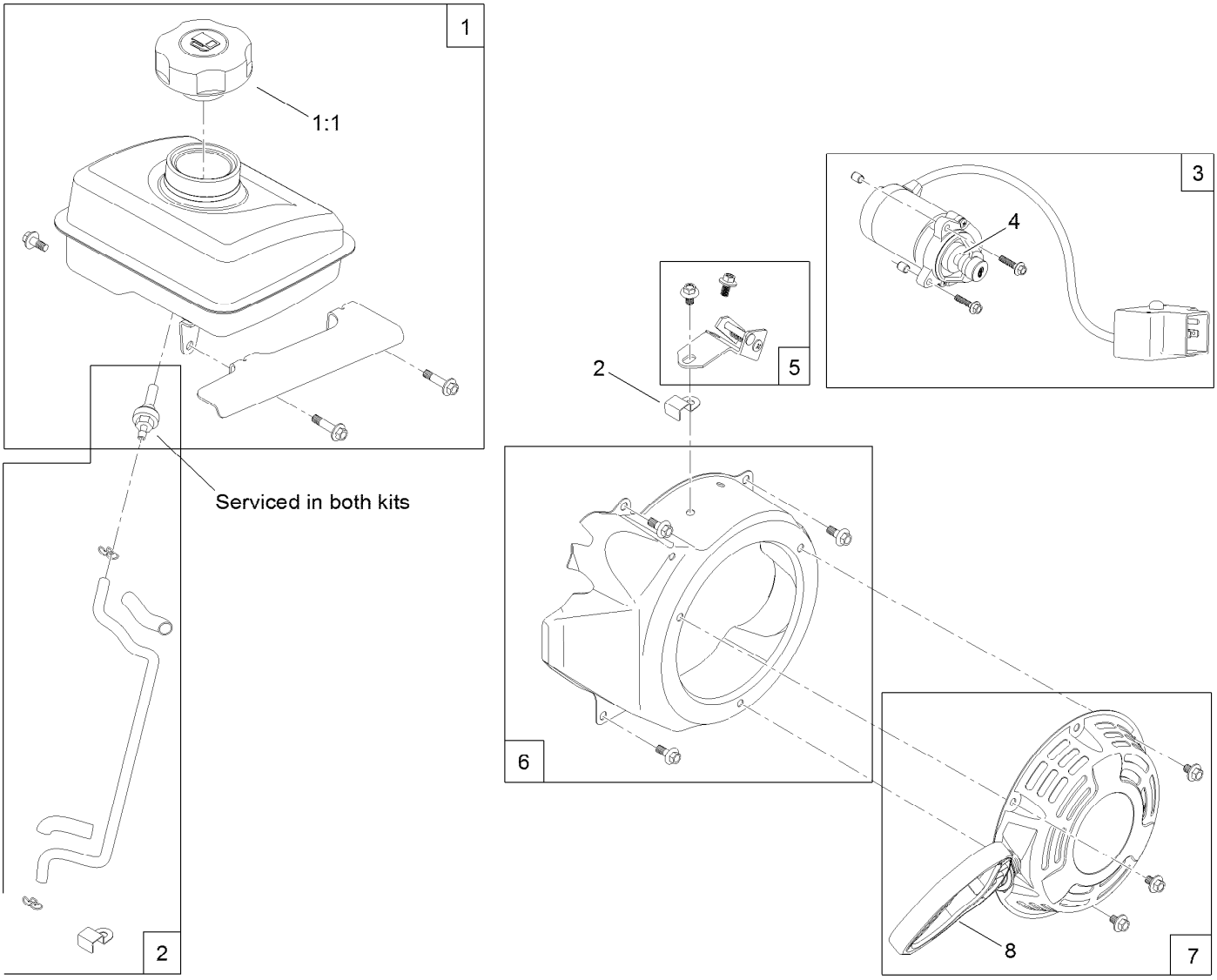

Engine Assembly No. 3 (continued)

Ref.	Part Number	Qty.	Description
1	127-9075	1	Fuel Tank And Cap Kit
1:1	121-0257	1	Cap-Fuel
2	127-9072	1	Fuel Line Kit
3	119-1983	1	Electric Starter Kit
4	119-1940	1	Pinion Kit
5	127-9074	1	Governor Kit
6	119-1926	1	Blower Shroud Kit
7	119-1925	1	Recoil ASM Kit
8	119-1924	1	Mitten Grip Kit

Shroud Assembly

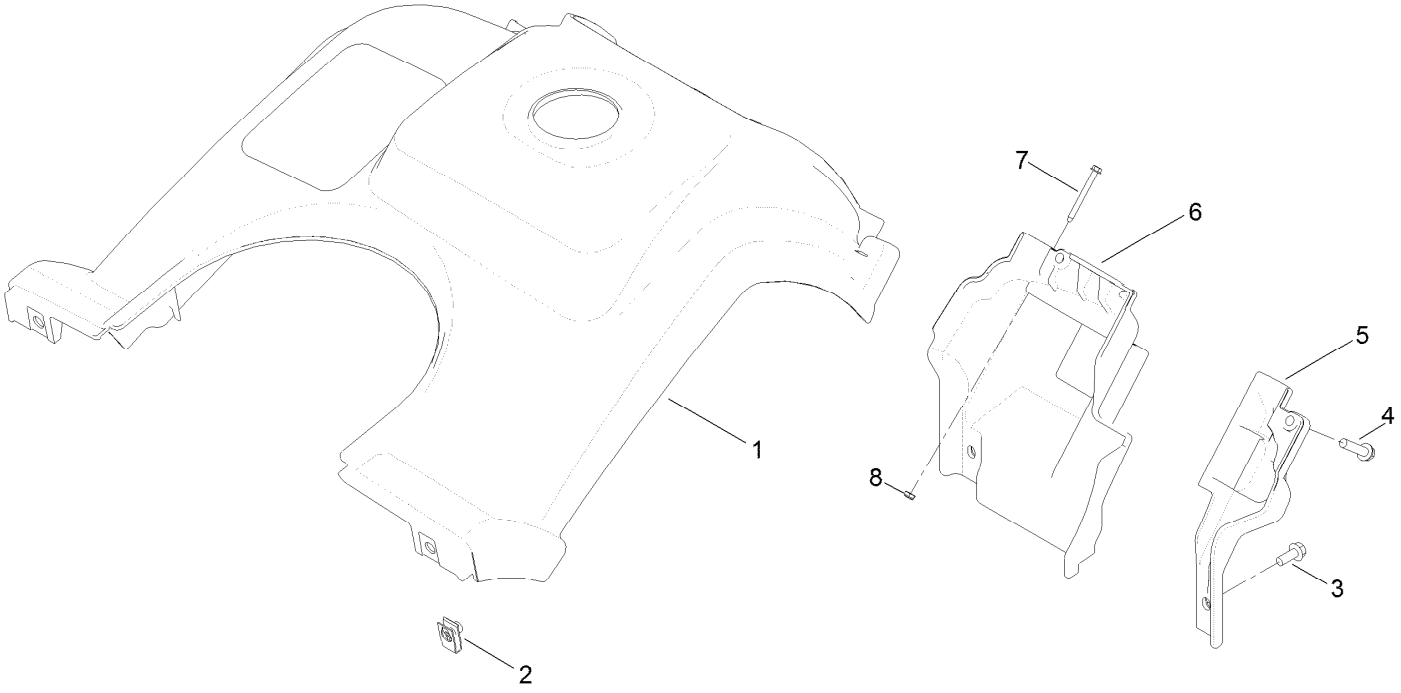

Shroud Assembly (continued)

Ref.	Part Number	Qty.	Description
1	127-5970	1	Shroud ASM
2	107069	2	Clip
3	32144-85	2	Screw-HWH
4	46-8094	2	Screw-Plastic
5	117-7719	1	Shroud-Lower, LH
6	117-7707	1	Shroud-Lower, RH
7	117-9106	2	Screw-HWH
8	3296-9	2	Nut-Hex

Handle Assembly

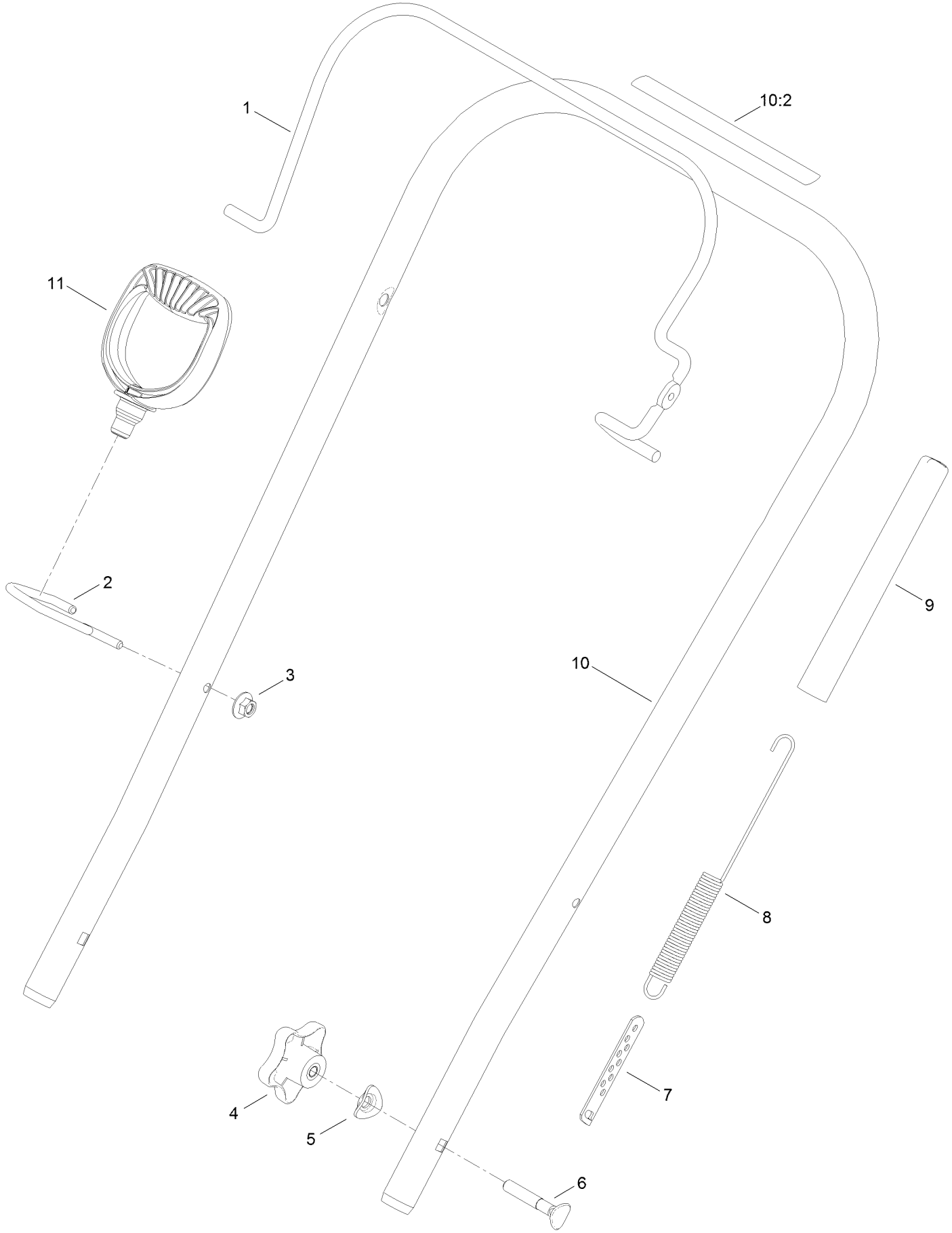

Handle Assembly (continued)

Ref.	Part Number	Qty.	Description
1	117-7718-03	1	Bail-Clutch
2	120-9804	1	Guide-Rope
3	114-3778	1	Nut-HF
4	106-4161	2	Knob-Handle
5	107-3844	2	Washer
6	92-2260	2	Screw-Handle
7	71-5330	1	Adjuster-Cable, Clutch
8	119-2913	1	Spring-Clutch
9	114-3796	1	Cover-Spring
10	117-7743	1	Upper Handle ASM
10:2	117-7713	1	Decal-Safety
11	117-9104	1	Handle-Recoil

Deflector Chute Control Assembly

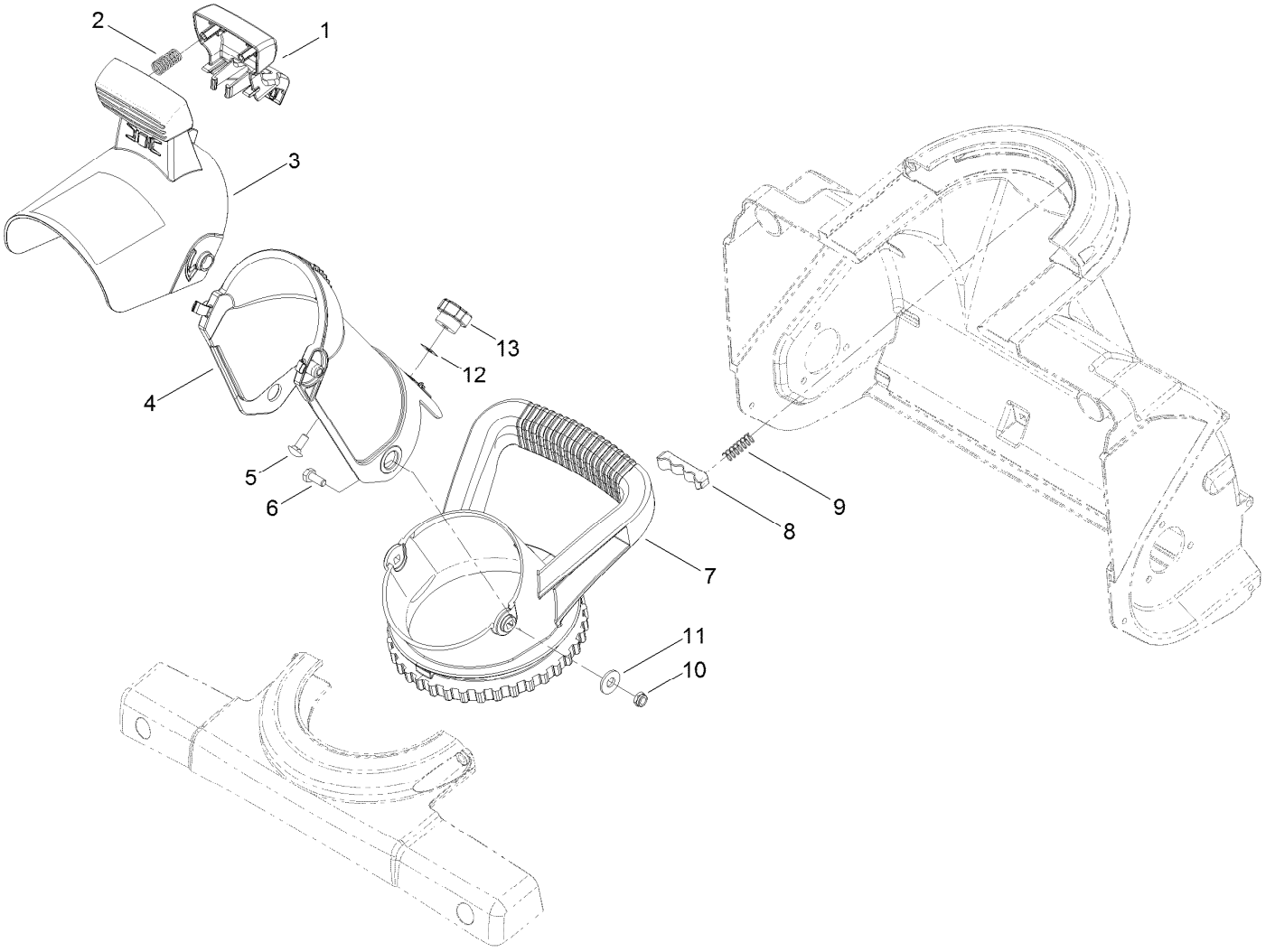

Deflector Chute Control Assembly (continued)

Ref.	Part Number	Qty.	Description
1	117-2314	1	Trigger-Deflector
2	110-9360	2	Spring-Compression
3	117-7742	1	Chute Deflector ASM
4	117-2312	1	Chute-Discharge
5	3229-11	1	Screw-CARR
6	321-3	2	Screw-HH
7	117-2345	1	Handle-Chute
8	75-9160	1	Detent-Chute
9	75-9170	2	Spring-Compression
10	3296-56	2	Nut-Lock, NI
11	3256-81	2	Washer-Flat
12	32115-15	1	Pushnut-Retainer, Bolt
13	233-67	1	Knob-Chute

Attachments and Accessories

For 38473 Power Clear 518 ZE Snowthrower

Product Name	Model/Part
High-Altitude Kit	121-4239
Engine Maintenance Kit	138-0698
Paddle Replacement Kit	38266
Case of 24 12-Ounce Bottles 5W30 Winter Oil	38907
Toro Snow Oil 0W30 Synthetic 20-Ounce Bottle	38913

Notes:



Count on it.