Form No. 3406-599 Rev B

TORO®

Count on it.

Parts Catalog

SnowMaster 824 QXE

Snowthrower

Model No. 36003—Serial No. 400000000 and Up

Register at www.Toro.com.
Original Instructions (EN)

3406-599 B

Ordering Replacement Parts

To order replacement parts, please supply the part number, the quantity, and the description of each part desired.

Understanding Reference Numbers

Each identified part in an illustration has a reference number. The reference number for a part also appears in the parts list, along with other information about the part.

This catalog uses two special reference number formats, one to indicate parts in a service assembly and another to indicate the quantity of a given part in an illustration.

Service Assembly Reference Numbers

Parts in service assemblies have reference numbers in the form a:b. The a represents the reference number of the entire service assembly and the b represents a sequential number unique to each part within the service assembly.

For example, a wheel assembly might be identified by reference number 6, the tire by 6:1, the valve by 6:2, and the wheel by 6:3. When you order the assembly identified by reference number 6, you receive all parts identified by reference numbers 6:1,6:2, and 6:3. However, you may also order any part individually. Reference numbers of this type appear in illustration and in parts lists.

Reference Numbers Indicating Quantity

In an illustration, if a reference number indicates more than one part, the reference number has the form nX y. The n represents the quantity of the part, the X is the multiplication symbol, and the y represents the reference number.

For example, in an illustration, the reference number 2X 37 means that two of the parts identified by reference number 37 are indicated.

Contents

Main Frame Assembly 4
Rotor Assembly 6
Rotor Drive Assembly 8
Transmission, Drive and Tire Assembly 10
Engine Assembly 12
Fuel System and Carburetor Assembly 14
Intake and Exhaust Assembly 16
Ignition and Electrical Assembly 18
Crankcase Assembly 20
Governor Assembly 22
Piston and Head Assembly 24
Blower Housing and Shrouds Assembly 26
Engine Decal Assembly 28
Chute Assembly 30
Chute Control Lever Assembly 32
Handle and Control Assembly 34
Attachments and Accessories 36

© 2017—The Toro® Company
8111 Lyndale Avenue South
Bloomington, MN 55420

Contact us at www.Toro.com.
Printed in the USA.
All Rights Reserved

Main Frame Assembly

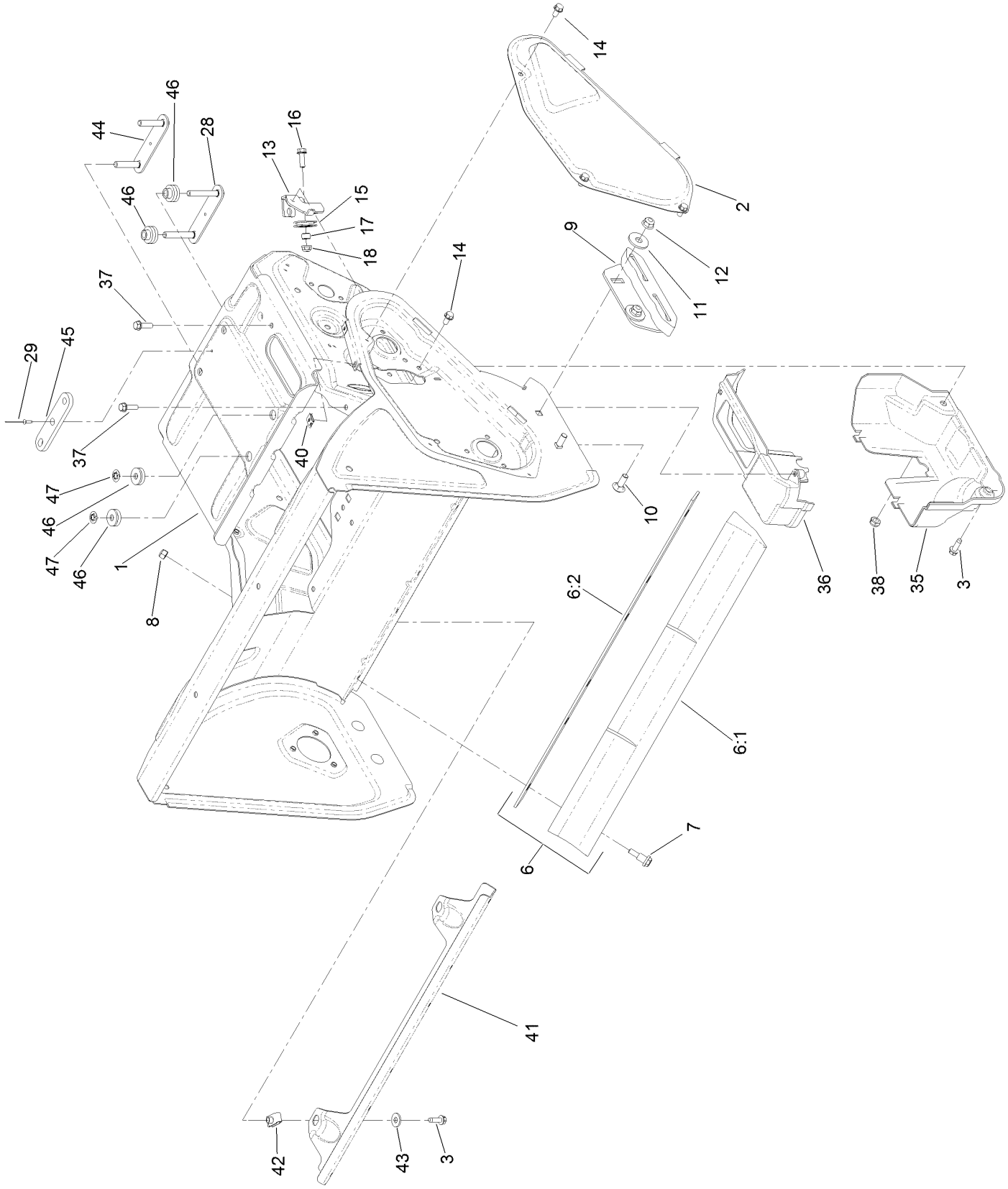

Main Frame Assembly (continued)

Ref.	Part Number	Qty.	Description
1	130-9550-01	1	Frame
2	130-9581-01	1	Cover-Belt
3	49-2040	3	Screw-HWHTF
6	130-9628	1	Scraper ASM
6:1		1	Blade-Scraper ●
6:2	130-9627	1	Foam-Scraper
7	104-0858	6	Bolt-Shoulder
8	3296-42	6	Nut-Lock, NI
9	130-9619	2	Skid ASM
10	3230-16	4	Screw-CARR
11	52-2861	4	Washer
12	104-8300	4	Nut-HF, NI
13	131-1793-03	1	Bracket-Cable
14	32144-4	4	Screw-HWH
15	95-7949	1	Cable-Pulley
16	115-5103	1	Screw-HHF

Ref.	Part Number	Qty.	Description
17	55-9370	1	Spacer-Blade, Rotor
18	104-7201	1	Nut-HF
28	130-9641	1	Plate-Stud, Front
29	923786	1	Rivet
35	131-1763	1	Cover-Belt, Lower
36	131-1764	1	Cover-Belt, Upper
37	46-8091	2	Screw-HWH
38	3296-47	1	Nut-Lock, NI
40	107-1013	2	Nut-Speed, U-Type
41	131-1797-01	1	Support-Frame, Lower
42	107069	2	Clip
43	3256-2	2	Washer-Flat
44	131-5947	1	Plate-Stud, Rear
45	131-5944-01	1	Plate-Spacer
46	131-5945	2	Isolator-Engine
47	109-5667	2	Ring-Retaining, Bolt

● Not serviced separately

Rotor Assembly

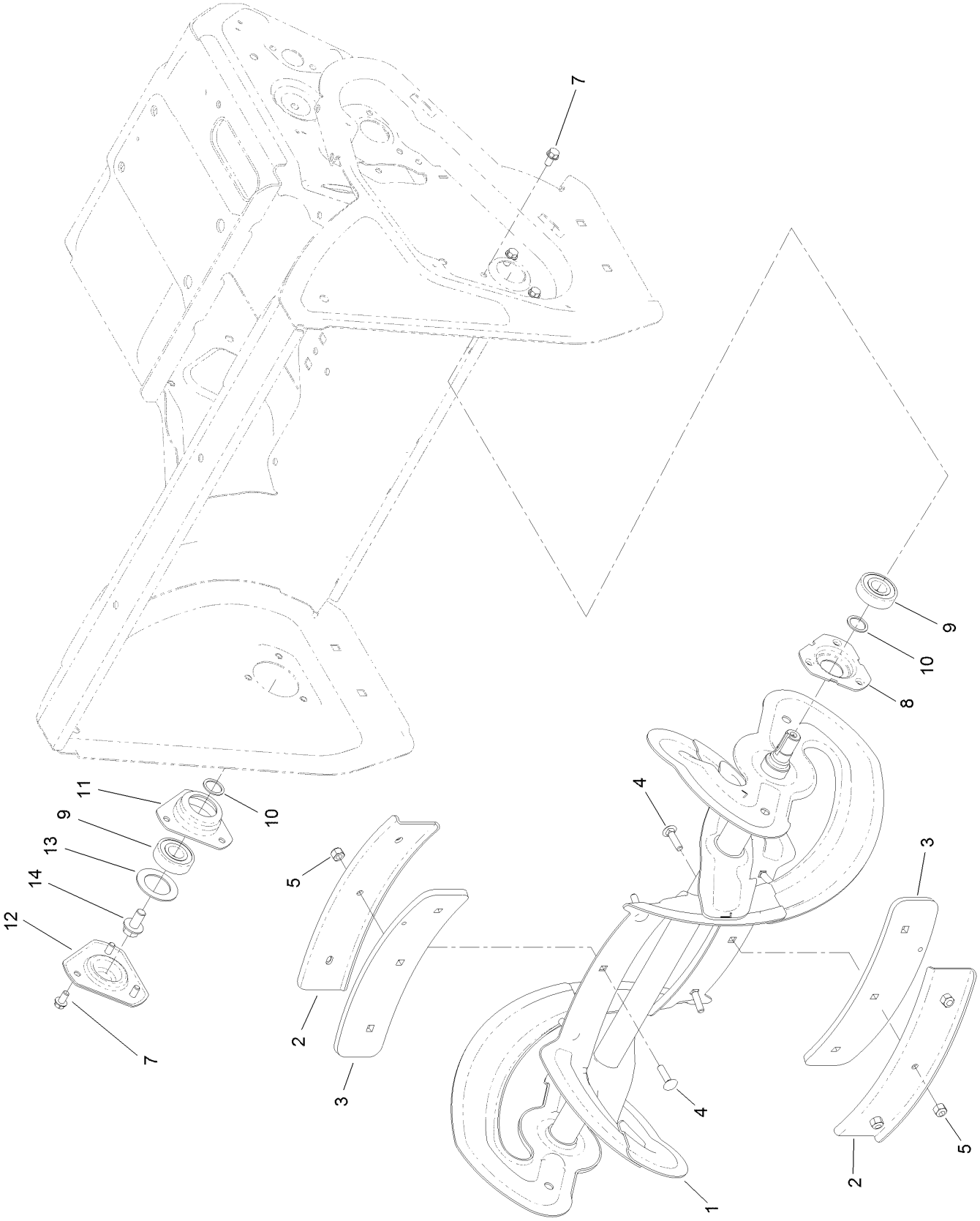

Rotor Assembly (continued)

Ref.	Part Number	Qty.	Description
1	130-9571-03	1	Rotor ASM
2	130-9568-03	2	Support-Center, Rotor
3	130-9569	2	Paddle-Center
4	3229-2	6	Screw-CARR
5	3296-42	6	Nut-Lock, NI
7	32144-4	6	Screw-HWH
8	108-4943	1	Flange-Bearing
9	38-7820	2	Bearing-Ball
10	52-7280	2	Washer-Thrust
11	130-9557	1	Bearing-Retainer
12	130-9558-01	1	Cap-Bearing
13	131-5905	1	Washer-Rubber
14	110-9380	1	Screw-HWH

Rotor Drive Assembly

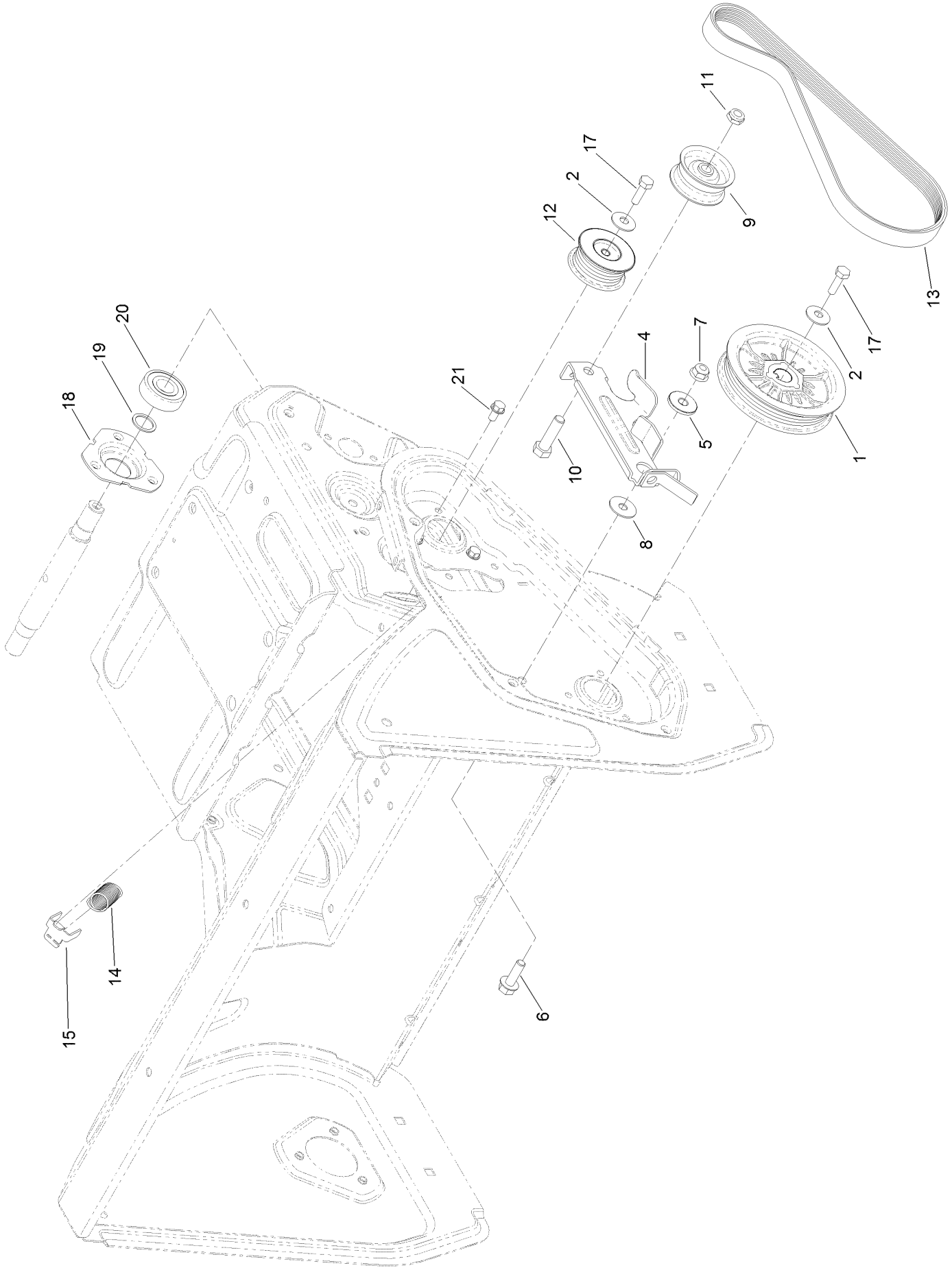

Rotor Drive Assembly (continued)

Ref.	Part Number	Qty.	Description
1	130-9574	1	Pulley-Rotor
2	3290-456	2	Washer-Belleville
4	131-5958	1	Arm-Clutch, Rotor
5	117-7711	1	Bushing-Idler
6	3234-29	1	Screw-HHF
7	104-8300	1	Nut-HF, NI
8	108-4925	1	Washer
9	131-5988	1	Pulley-Idler, Flat
10	323-29	1	Screw-HH
11	3296-59	1	Nut-Lock, NI

Ref.	Part Number	Qty.	Description
12	130-9577	1	Pulley-Jackshaft, Rotor
13	131-5967	1	Belt-Poly V
14	130-9572	1	Spring-Extension
15	108-4938	1	Clip-Spring, Brake
17	9080046	2	Screw-HH
18	108-4943	1	Flange-Bearing
19	52-7280	1	Washer-Thrust
20	38-7820	1	Bearing-Ball
21	32144-4	3	Screw-HWH

Transmission, Drive and Tire Assembly

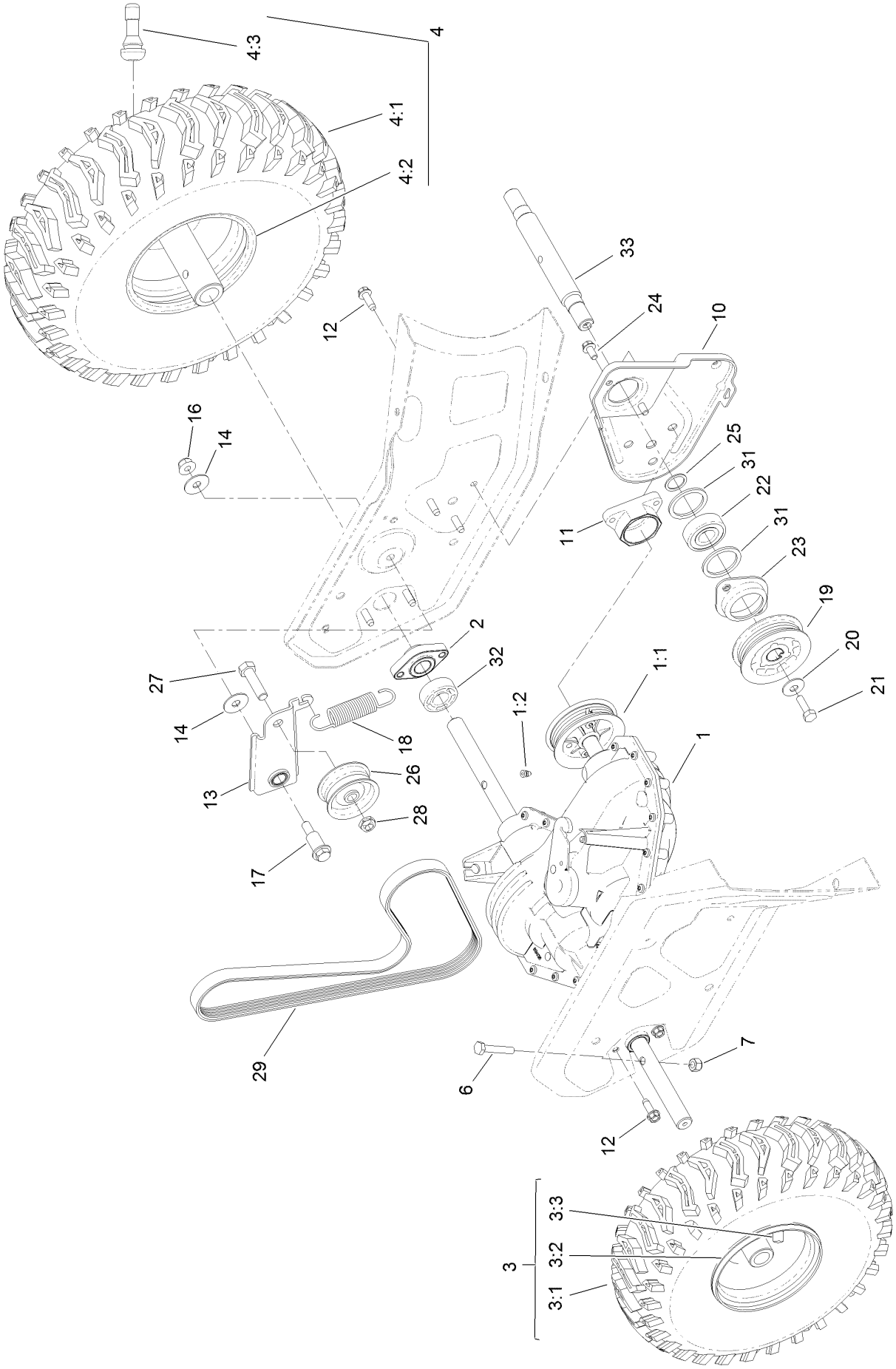

Transmission, Drive and Tire Assembly (continued)

Ref.	Part Number	Qty.	Description
1	130-9642	1	Transmission
1:1	131-5973	1	Pulley Repair Kit
1:2	131-5984	1	Plug-Oil
2	130-9643	2	Bearing-Axle
3		1	RH Wheel And Tire ASM ●
3:1	130-9559	1	Tire
3:2	130-9560	1	Wheel
3:3	232-27	1	Stem-Valve
4		1	LH Wheel And Tire ASM ●
4:1	130-9559	1	Tire
4:2	130-9560	1	Wheel
4:3	232-27	1	Stem-Valve
6	321-9	2	Screw-HH
7	3296-42	2	Nut-Lock, NI
10	130-9586-03	1	Plate-Support, Jackshaft
11	131-1794	1	Support-Bearing
12	49-2040	7	Screw-HWHTF
13	131-1795	1	Idler-Traction
14	108-4925	2	Washer
16	104-8300	1	Nut-HF, NI
17	131-1789	1	Bolt-Shoulder, HHF
18	130-9645	1	Spring-Extension
19	130-9583	1	Pulley-Jackshaft
20	3290-456	1	Washer-Belleville
21	9080046	1	Screw-HH
22	38-7820	1	Bearing-Ball
23	130-9623	1	Retainer-Bearing
24	32144-4	2	Screw-HWH
25	52-7280	1	Washer-Thrust
26	131-5988	1	Pulley-Idler, Flat
27	323-29	1	Screw-HH
28	3296-59	1	Nut-Lock, NI
29	131-5968	1	Belt-Poly V
31	131-5904	2	Washer-Rubber
32	131-5910	1	Spacer-Axle
33	130-9585	1	Jackshaft

● Not serviced separately

Engine Assembly

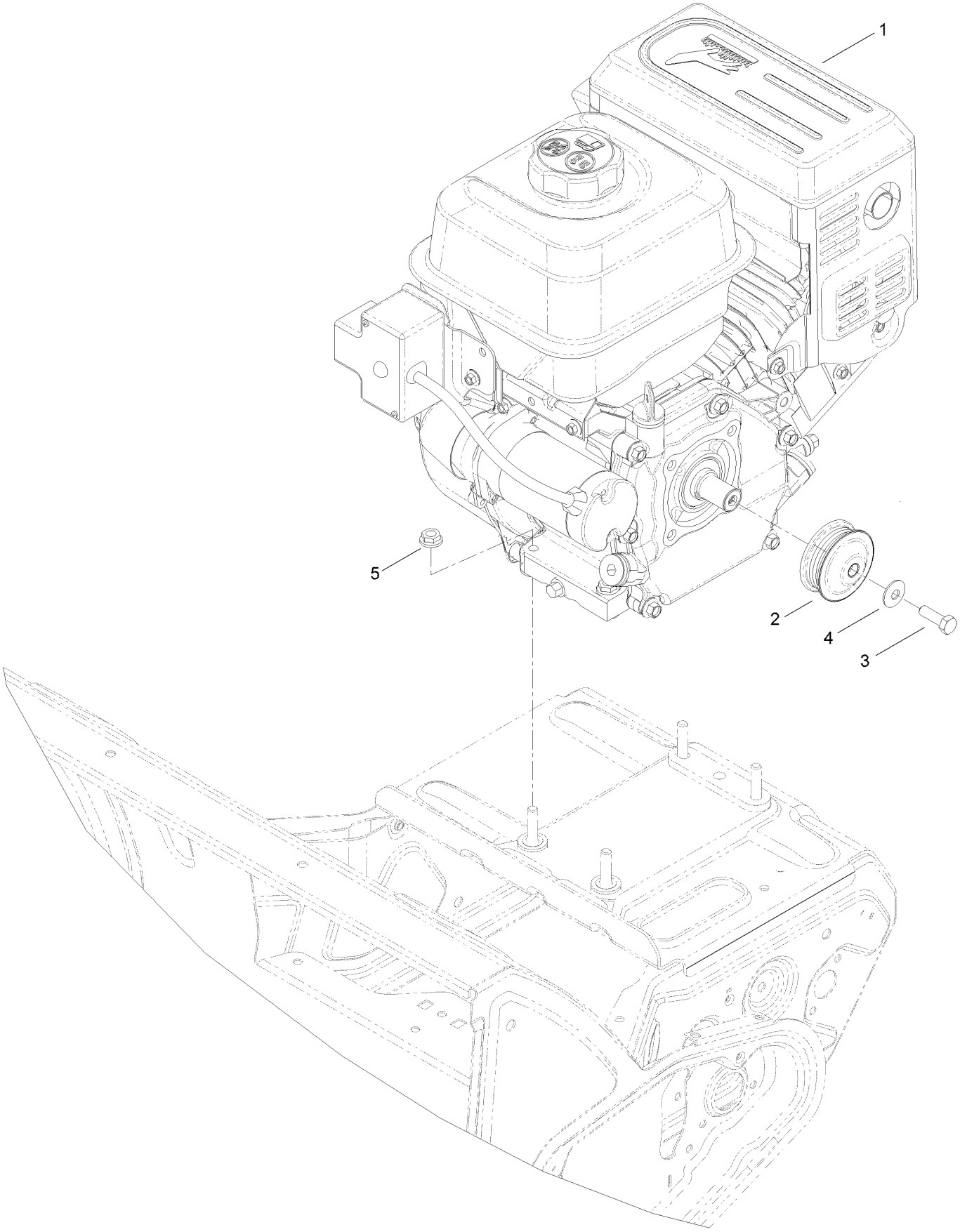

Engine Assembly (continued)

Ref.	Part Number	Qty.	Description
1	127-9174	1	Engine-G250Fds-2
2	131-5908	1	Pulley-Engine
3	131-5919	1	Screw-HH, Patch
4	3290-456	1	Washer-Belleville
5	32128-20	4	Nut-HF

Fuel System and Carburetor Assembly

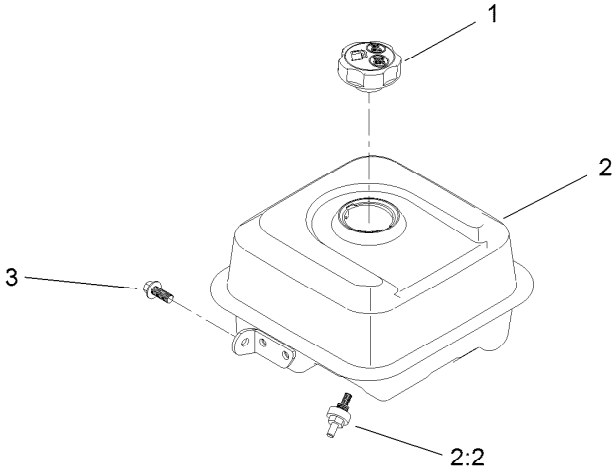

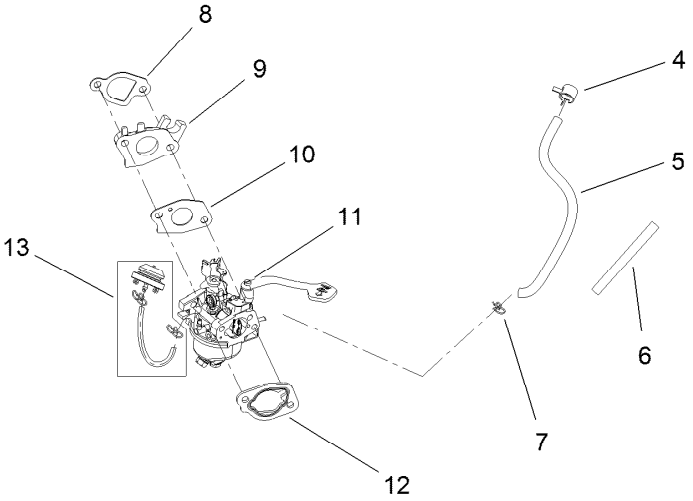

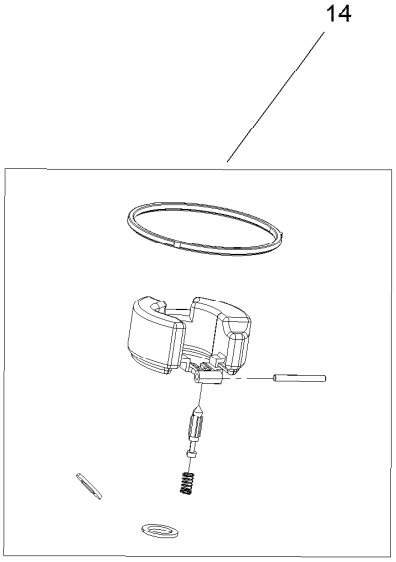

Fuel System and Carburetor Assembly (continued)

Ref.	Part Number	Qty.	Description
1	133-9823	1	Cap-Fuel
2	133-1553	1	Fuel Tank And Filter ASM
2:2	127-9065	1	Filter-Fuel
3	121-0294	1	Screw-HHF
4	127-9120	1	Clamp-Hose
5	133-1537	1	Hose-Fuel
6	133-1538	1	Sleeve-Abrasion
7	121-0087	1	Clamp-Hose
8	133-1531	1	Gasket-Carburetor
9	133-1532	1	Insulator-Carburetor
10	133-1533	1	Gasket-Carburetor
11	133-1534	1	Carburetor ASM
12	121-0080	1	Gasket-Carburetor
13	127-9079	1	Primer Kit
14	127-9395	1	Internal Carb Service Kit
99	127-9302	1	High Altitude Kit - G250 ●

● Not illustrated

Intake and Exhaust Assembly

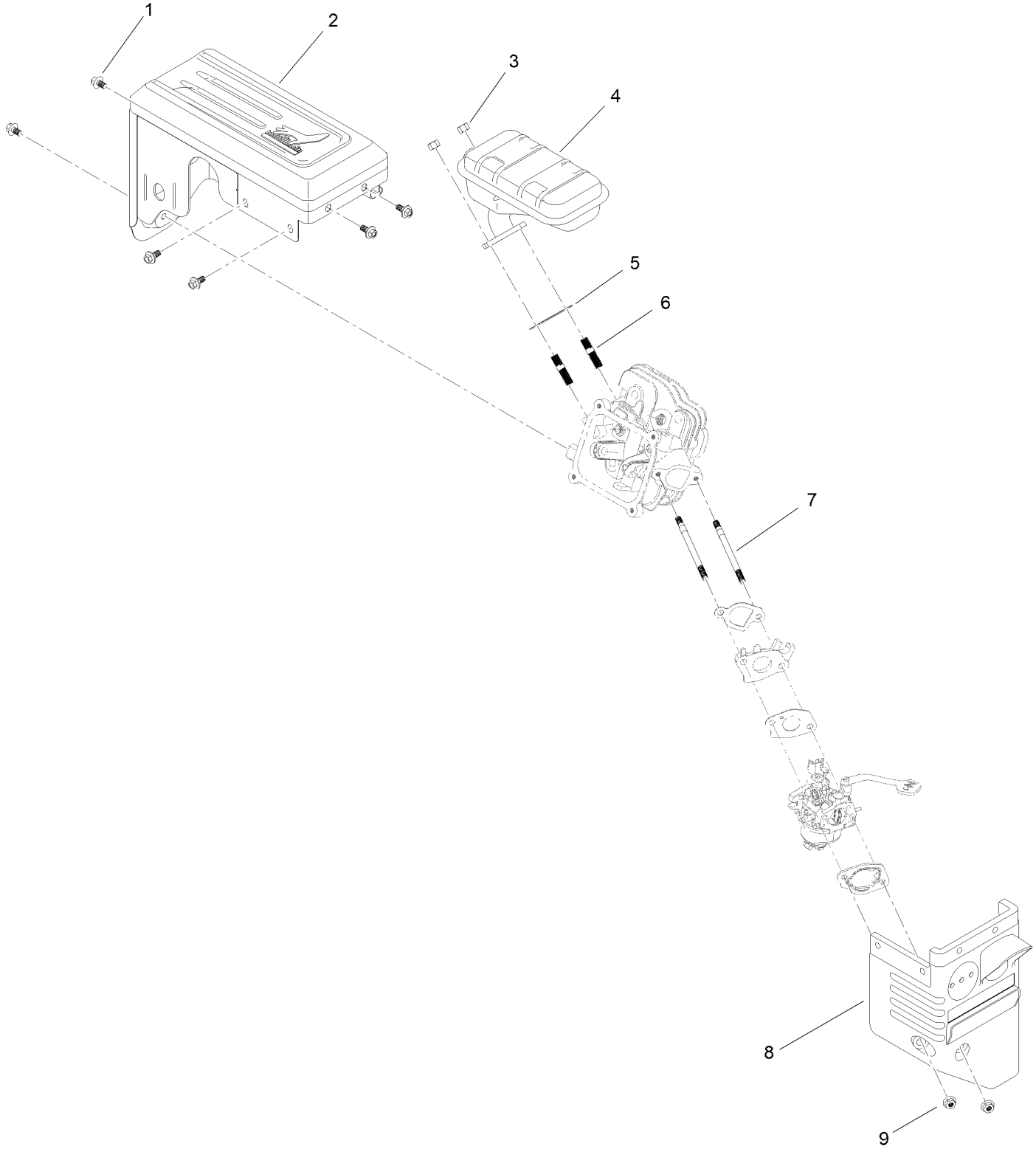

Intake and Exhaust Assembly (continued)

Ref.	Part Number	Qty.	Description
1	121-0294	6	Screw-HHF
2	133-1541	1	Muffler Shroud ASM
3	121-0199	2	Nut-HH
4	133-1540	1	Muffler ASM
5	133-1539	1	Gasket-Exhaust
6	121-0464	2	Stud-Exhaust
7	121-4112	2	Stud-Intake
8	127-9112	1	Box-Heater
9	121-0308	2	Nut-Flange

Ignition and Electrical Assembly

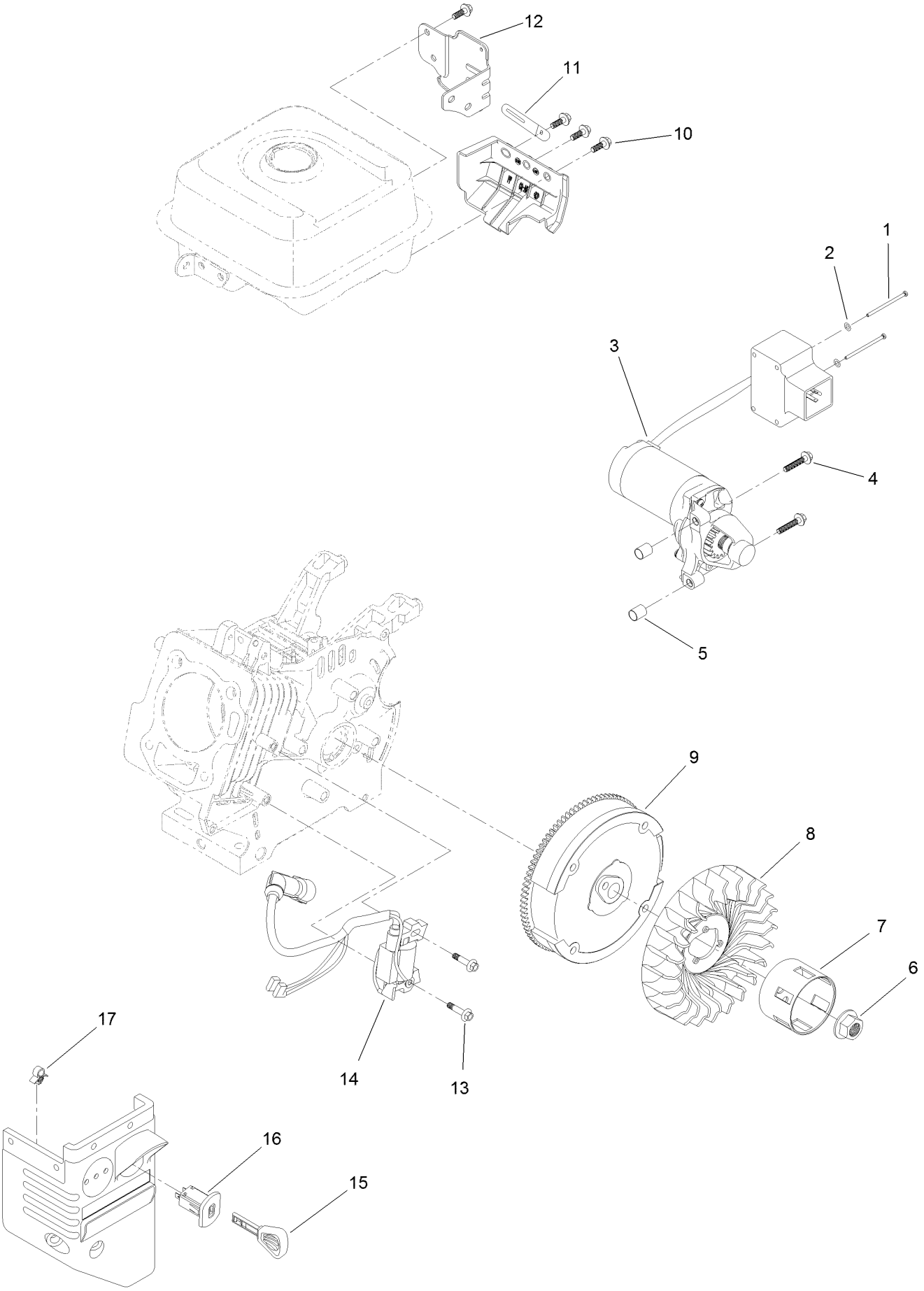

Ignition and Electrical Assembly (continued)

Ref.	Part Number	Qty.	Description
1	121-0306	2	Screw-Bhp
2	121-0312	2	Washer-Plain
3	133-1588	1	Motor-Starter
4	133-1546	2	Screw-Flange
5	121-0055	2	Pin-Dowel
6	121-0047	1	Nut-Flange
7	133-1527	1	Cup-Starter
8	133-1526	1	Fan-Cooling
9	133-1525	1	Flywheel And Ring Gear ASM
10	127-9123	4	Screw-HHF
11	121-0017	1	Clip-Harness, Wire
12	133-1554	1	Bracket-Switchbox, Starter
13	121-0097	2	Screw-HHF
14	127-9400	1	Ignition Coil ASM
15	117-7728	1	Key
16	121-0283	1	Switch-Key
17	121-0326	1	Clip

Crankcase Assembly

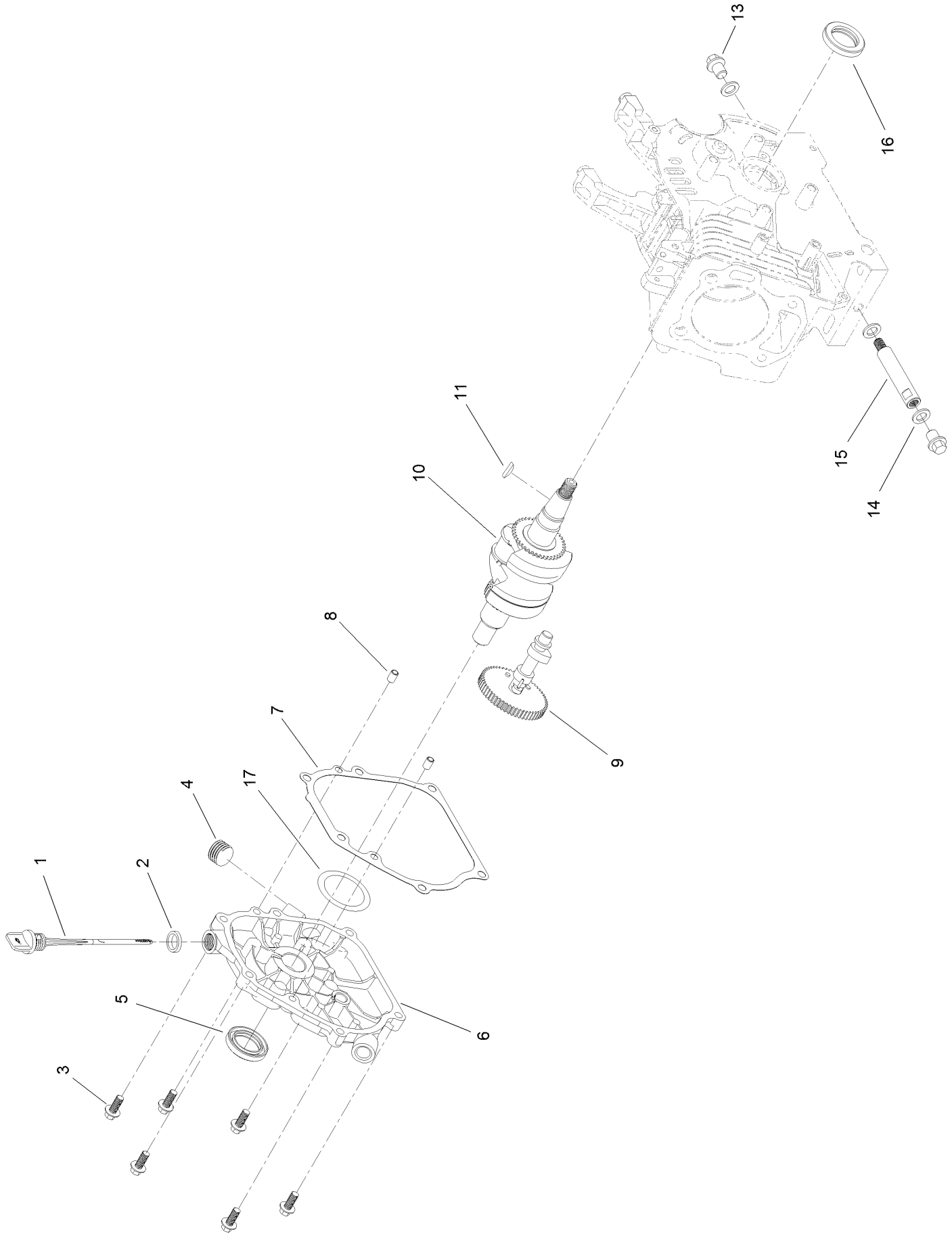

Crankcase Assembly (continued)

Ref.	Part Number	Qty.	Description
1	127-9409	1	Dipstick-Oil
2	127-9492	1	Gasket-Dipstick, Rubber
3	121-4114	6	Screw-HHF
4	133-9805	1	Plug-Drain
5	133-1516	1	Seal-Oil
6	133-9862	1	Cover-Crankcase
7	127-9493	1	Gasket-Cover, Crankcase
8	121-0054	2	Pin-Dowel
9	127-9494	1	Camshaft ASM
10	133-1517	1	Crankshaft
11	120-4320	1	Key-Woodruff
13	121-0030	2	Screw-HHF
14	121-0048	3	Washer-Plain
15	127-9104	1	Tube-Drain, Oil
16	133-9864	1	Seal-Oil
17	133-9863	1	Washer-Thrust

Governor Assembly

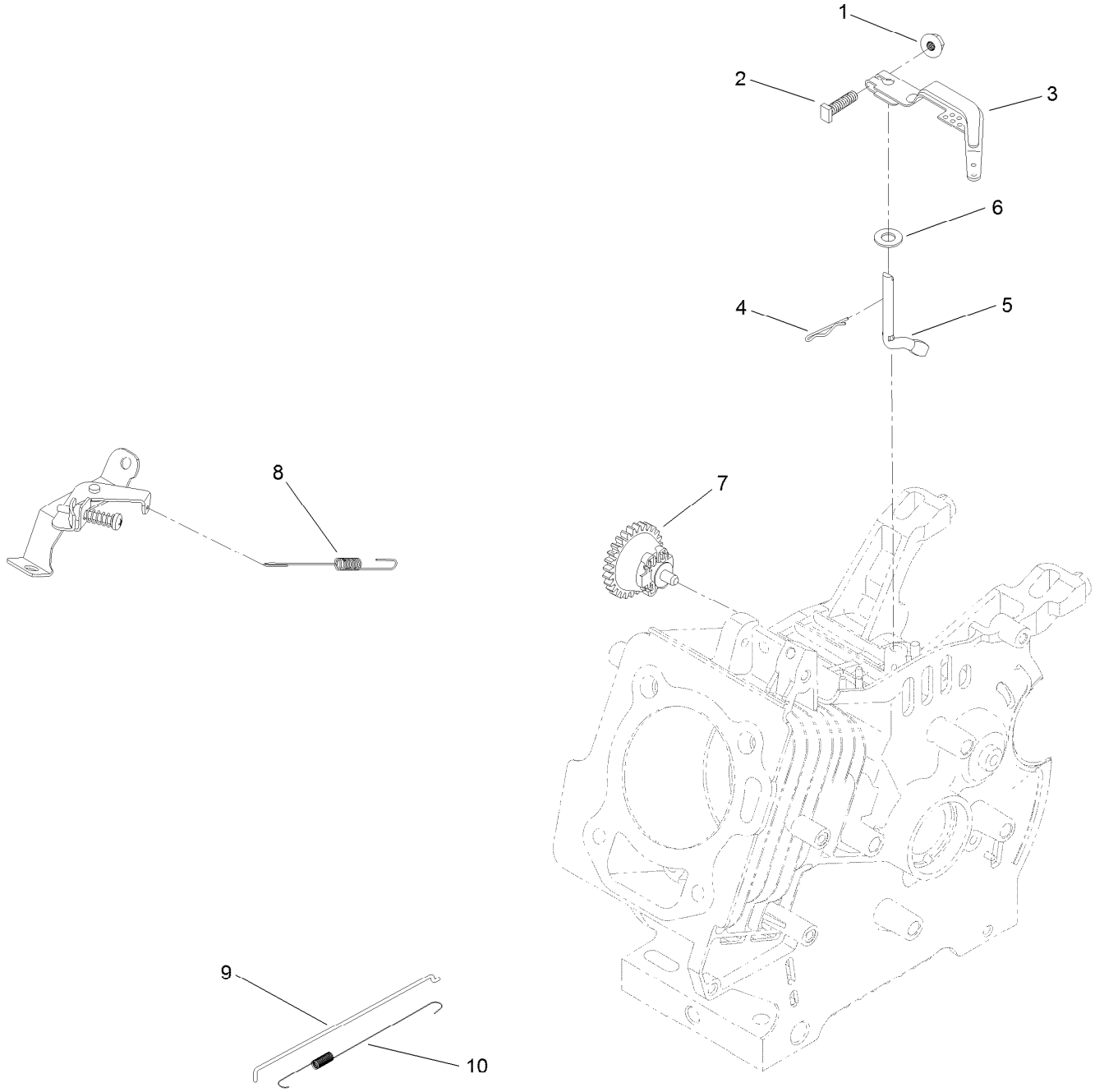

Governor Assembly (continued)

Ref.	Part Number	Qty.	Description
1	120-4236	1	Nut-Flange
2	120-4238	1	Bolt-Arm, Governor
3	121-0155	1	Arm-Governor
4	120-4256	1	Pin-Hair
5	133-1523	1	Shaft-Governor
6	121-0498	1	Washer-Plain
7	127-9101	1	Governor Gear ASM
8	127-9398	1	Spring-Governor
9	133-1535	1	Rod-Governor
10	133-1536	1	Spring-Return, Throttle

Piston and Head Assembly

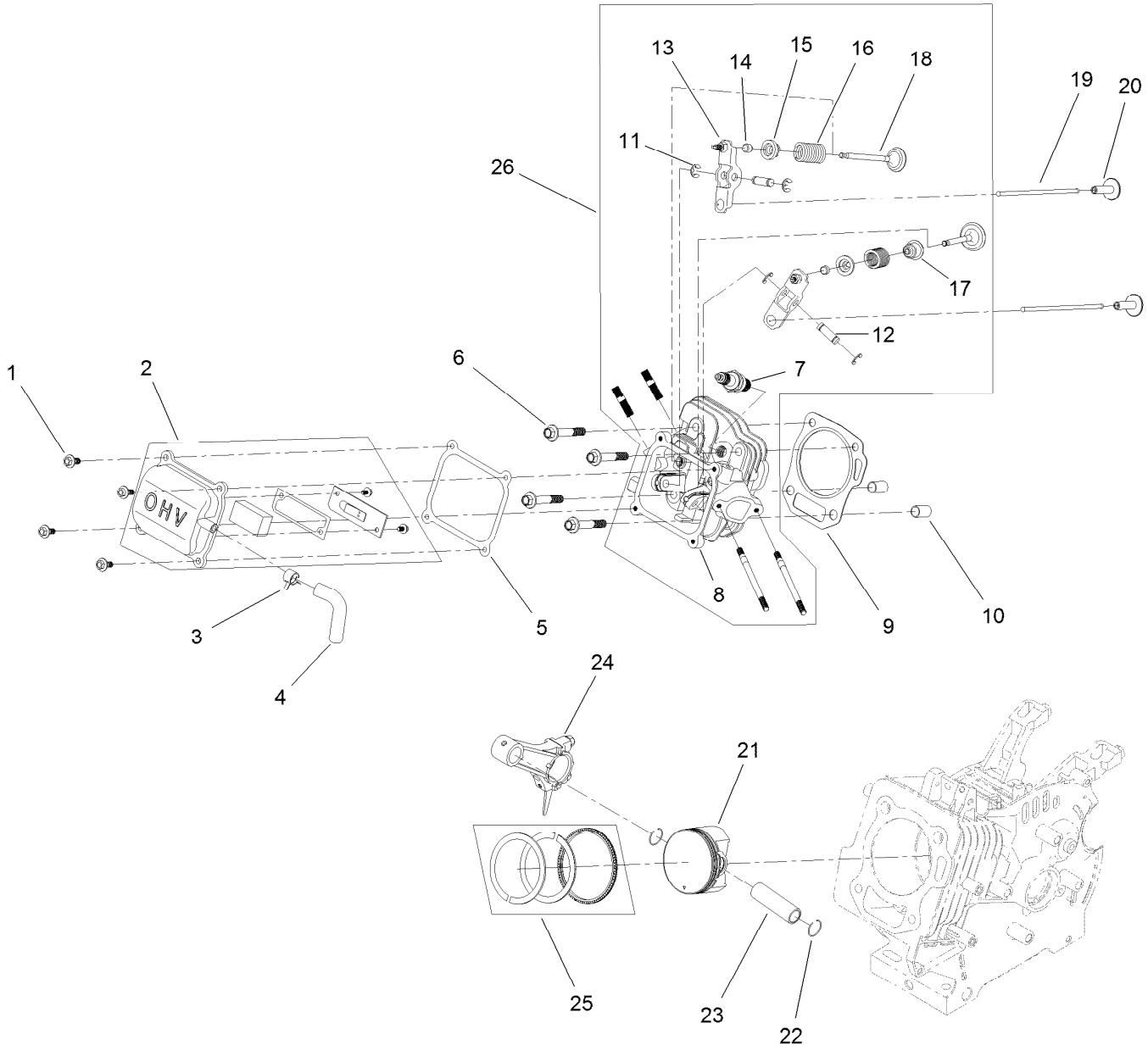

Piston and Head Assembly (continued)

Ref.	Part Number	Qty.	Description
1	120-4454	4	Screw-HHF
2	133-1500	1	Valve Cover ASM
3	133-1558	1	Clamp-Hose
4	133-1502	1	Tube-Breather
5	133-1507	1	Gasket-Cover, Valve
6	133-1508	4	Screw-Flange
7	81-3250	1	Spark Plug
8	133-1509	1	Head-Cylinder
9	133-1510	1	Gasket-Head
10	120-4200	2	Pin-Dowel
11	133-1511	4	E-Clip
12	133-1512	2	Pin-Arm, Rocker
13	133-1513	2	Rocker Arm ASM
14	121-4116	2	Rotator-Valve
15	121-4117	2	Retainer-Spring, Valve
16	127-9014	2	Spring-Valve
17	121-4202	1	Seal-Stem, Valve
18	133-1515	1	Set-Valve
19	133-1514	2	Rod-Push
20	127-9015	2	Tappet-Valve
21	133-1522	1	Piston
22	121-0313	2	Clip-Pin, Piston
23	121-4128	1	Pin-Piston
24	121-4123	1	Connecting Rod ASM
25	133-1521	1	Set-Ring, Piston
26	133-9867	1	Complete Head ASM

Blower Housing and Shrouds Assembly

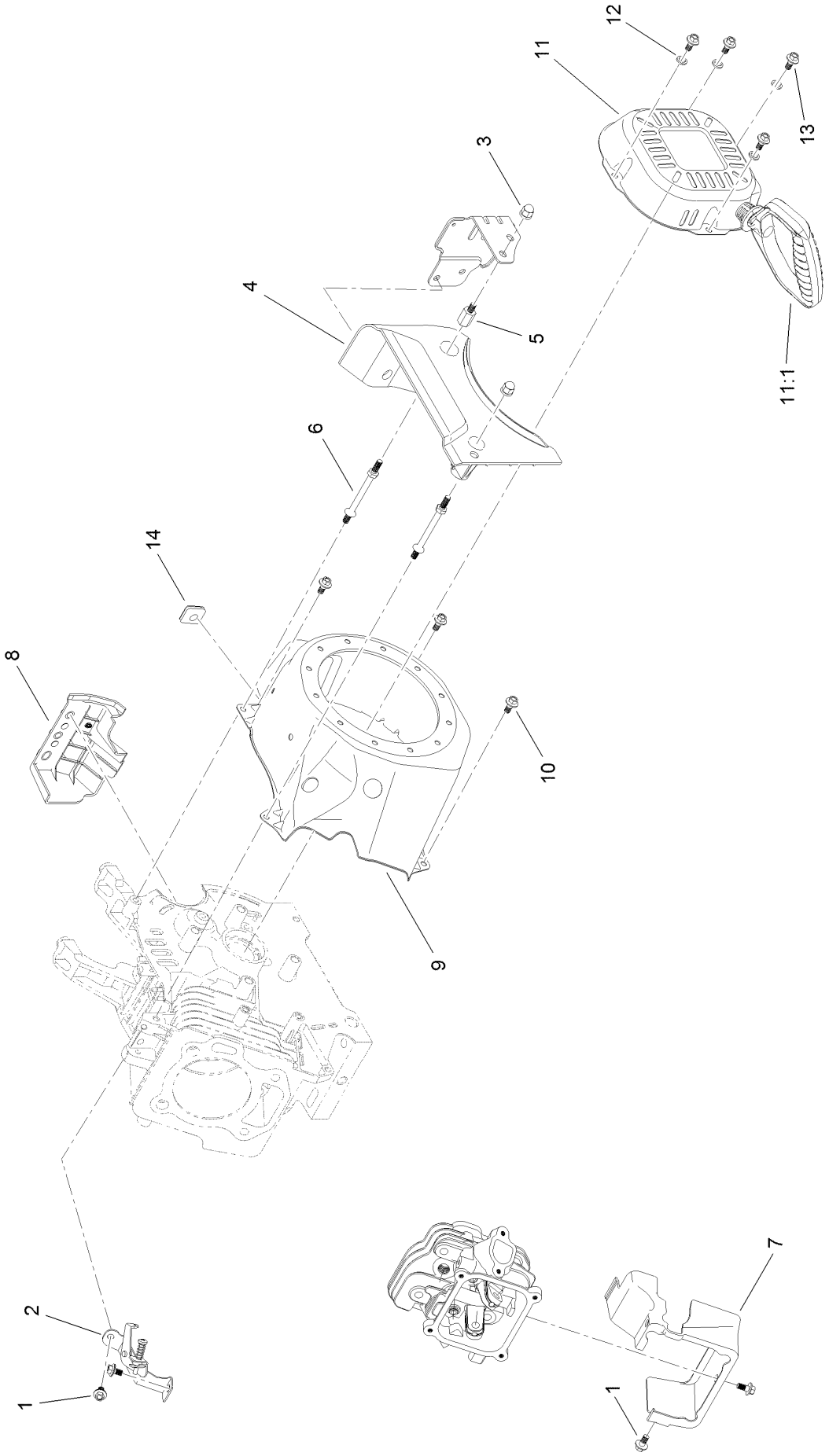

Blower Housing and Shrouds Assembly (continued)

Ref.	Part Number	Qty.	Description
1	121-0116	4	Screw-HHF
2	133-1520	1	Throttle Control ASM
3	127-9383	2	Nut-Acorn
4	133-1544	1	Panel-Front
5	133-1545	1	Spacer-Stud, Threaded
6	127-9110	2	Stud-Mount
7	133-1530	1	Shroud-Head
8	133-1543	1	Panel-Side, Engine
9	133-1528	1	Shroud-Flywheel
10	121-0294	3	Screw-HHF
11	133-1529	1	Recoil ASM
11:1	121-0287	1	Handle-Recoil
12	127-9380	4	Washer-Plain
13	127-9031	4	Screw-HHF
14	133-1548	1	Grommet-Rubber

Engine Decal Assembly

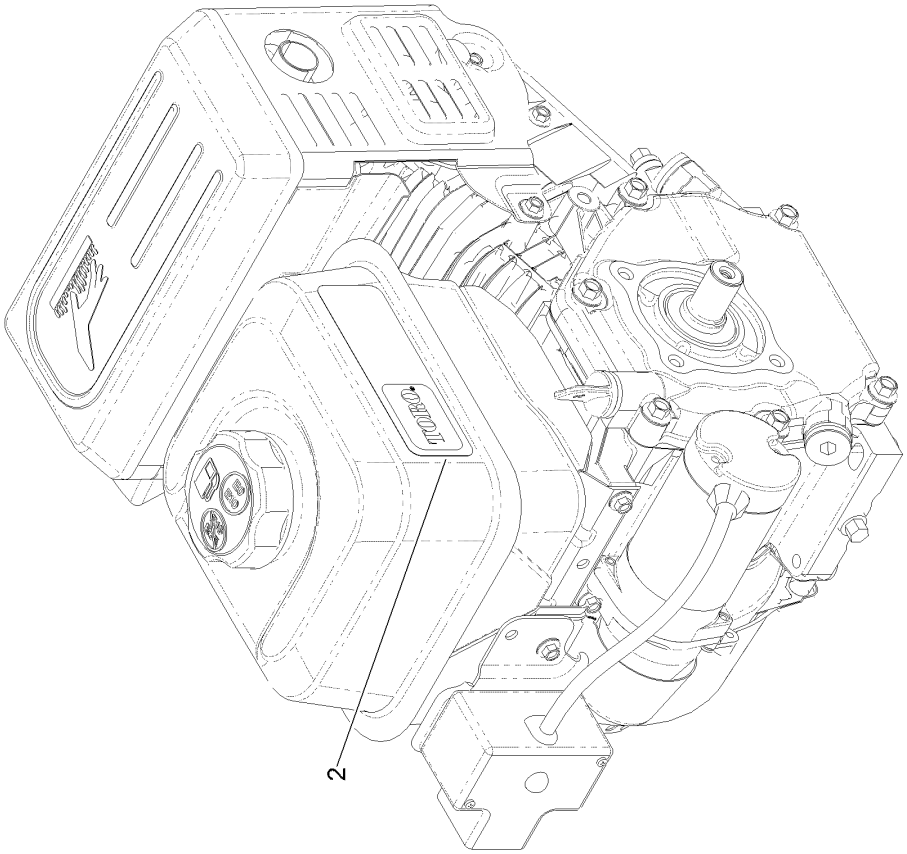

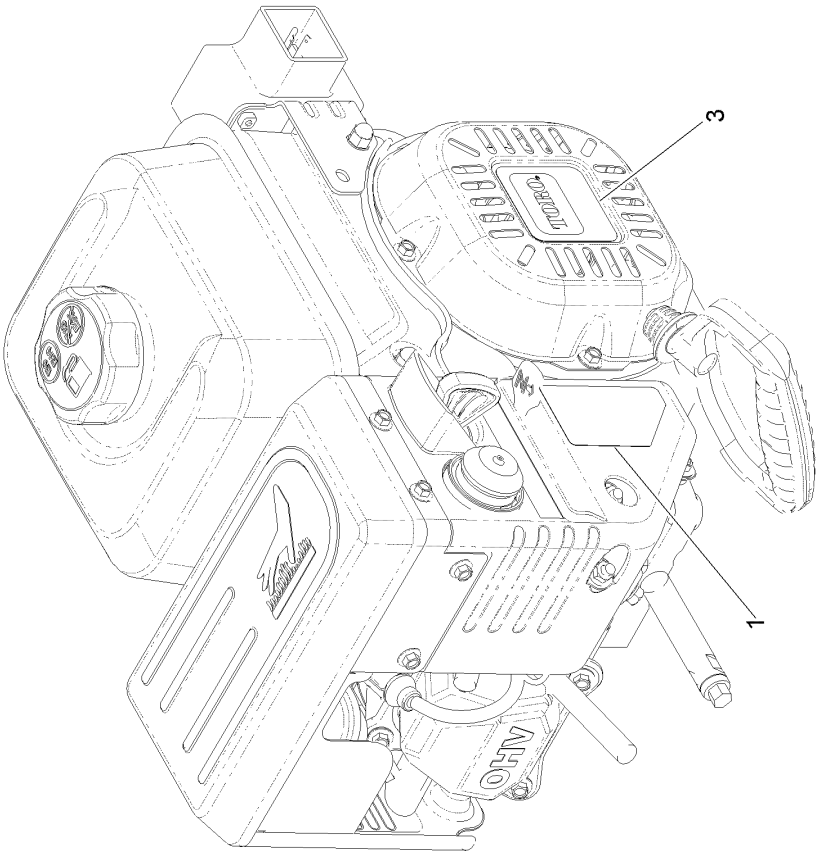

Engine Decal Assembly (continued)

Ref.	Part Number	Qty.	Description
1	120-9805	1	Decal-Control, Engine
2	131-5911	1	Decal-Engine Series, G250
3	131-5912	1	Decal-Recoil, G250

Chute Assembly

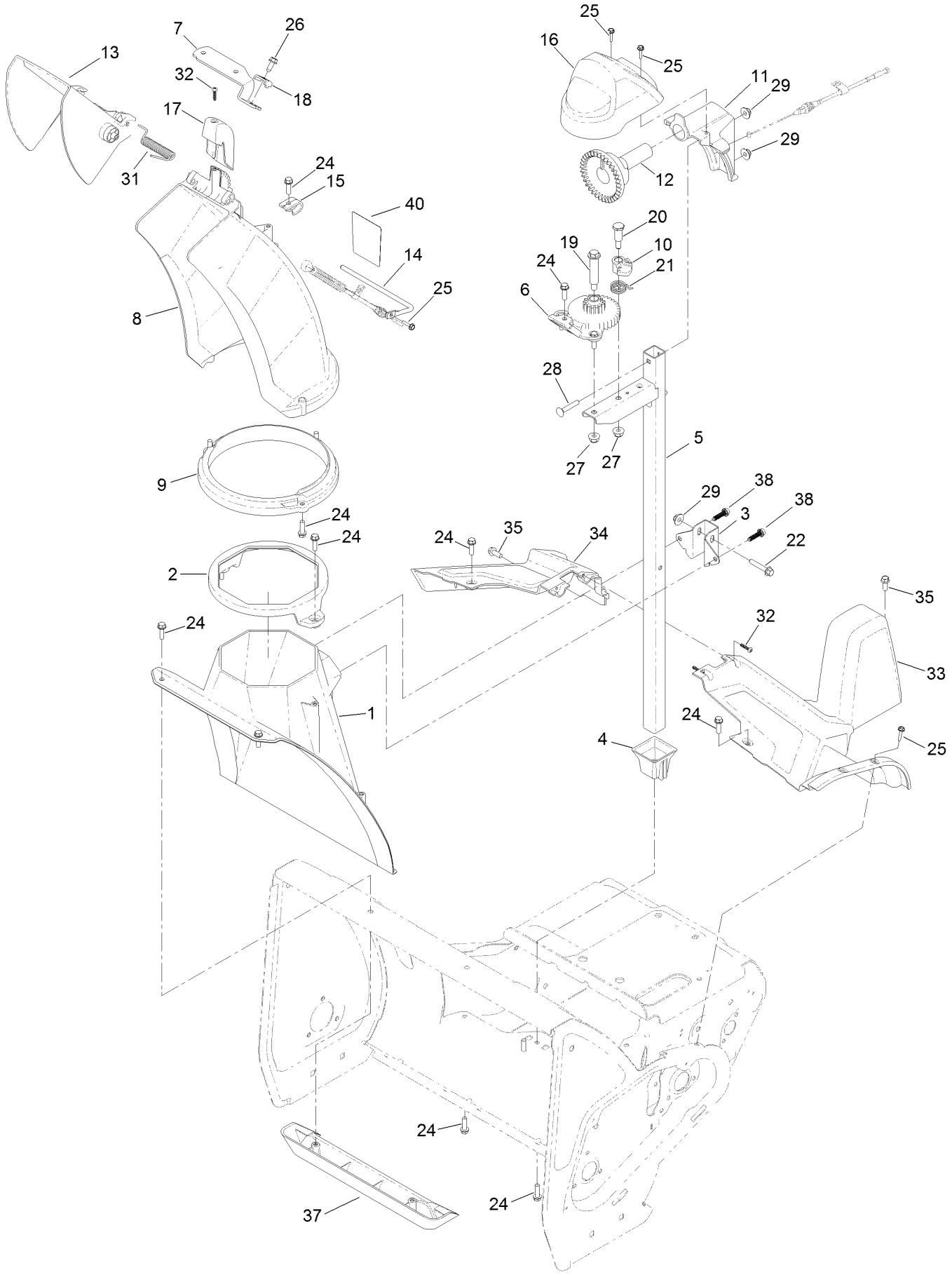

Chute Assembly (continued)

Ref.	Part Number	Qty.	Description
1	130-9587	1	Chute-Lower
2	130-9588	1	Guide-Chute
3	130-9589-03	1	Bracket-Post, Support (Chute)
4	130-9590	1	Retainer- Post, Chute
5	130-9603-03	1	Post-Chute
6	130-9605	1	Gear-Chute
7	130-9606	1	Bracket-Cable
8	133-5591	1	Chute-Discharge
9	130-9596	1	Ring-Chute
10	130-9607	1	Latch-Chute
11	130-9608	1	Mount-Gear, Chute
12	106-4471	1	Gear-Face
13	131-5915	1	Deflector-Chute
14	121-6826	1	Rod-Deflector
15	130-9609	1	Guide-Cable
16	130-9611	1	Cover-Gear, Chute
17	120-9299	1	Chute-Cover
18	106-7297	1	Clamp-Cable
19	100-9880	1	Bolt-Shoulder
20	63-2650	1	Screw-Shoulder
21	130-9616	1	Spring-Torsion, Latch (Chute)
22	131-5927	1	Screw-HHF
24	46-8091	17	Screw-HWH
25	98-1375	5	Screw-HWH
26	32144-10	1	Screw-HWH
27	104-8300	2	Nut-HF, NI
28	108-0988	2	Screw-CARR
29	114-3778	3	Nut-HF
31	120-9298	1	Spring-Torsion
32	94-4496	3	Screw-PPH
33	131-1754	1	Shroud-Upper, LH
34	131-1765	1	Shroud-Lower, RH
35	32144-85	2	Screw-HWH
37	131-1768	1	Kicker-Housing
38	130-6658	2	Screw-Flange, Plastic
40	133-5592	1	Decal

Chute Control Lever Assembly

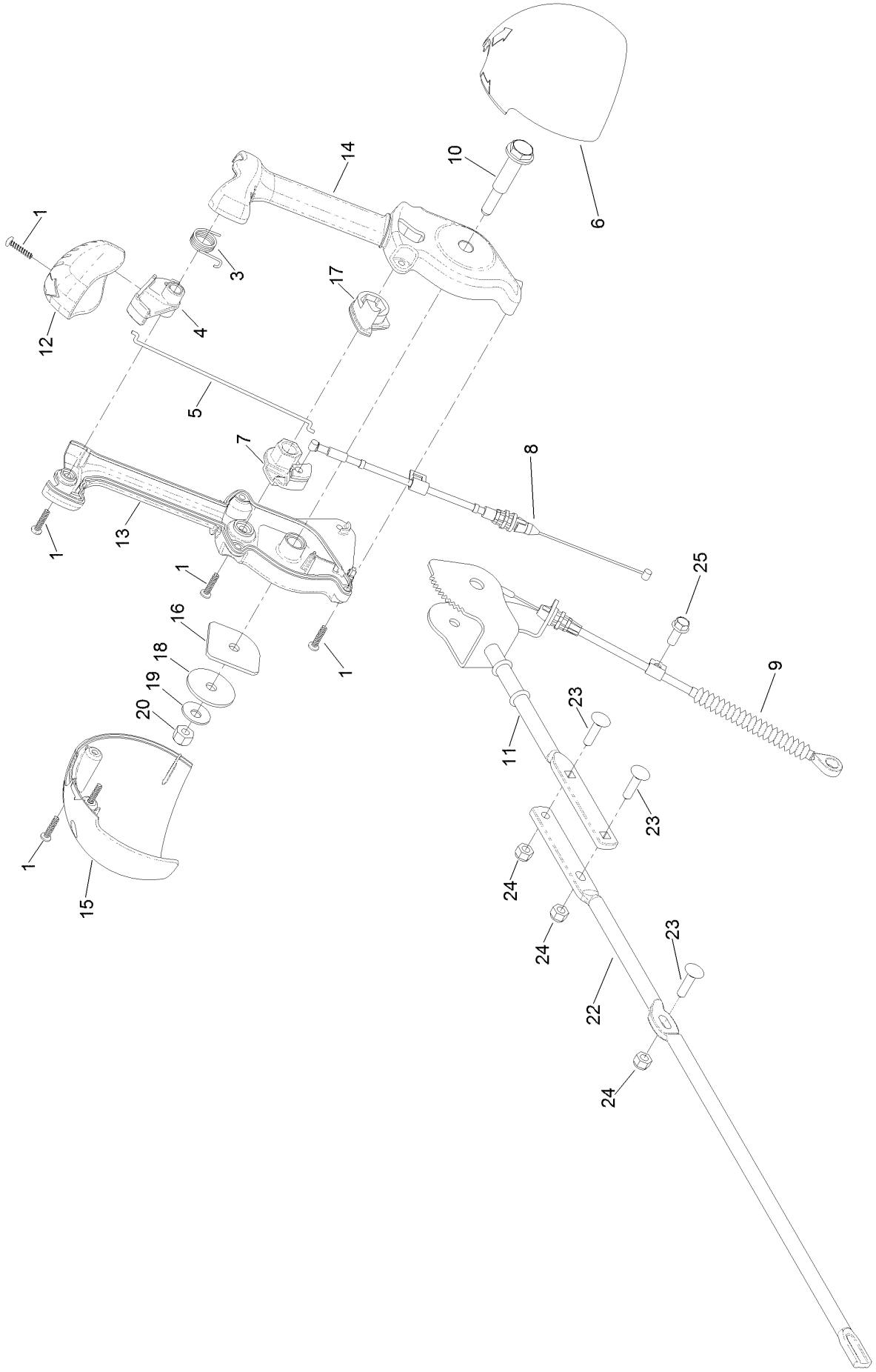

Chute Control Lever Assembly (continued)

Ref.	Part Number	Qty.	Description
1	94-4496	6	Screw-PPH
3	105-9982	1	Spring-Torsion
4	105-9984	1	Trigger-Latch
5	105-9985	1	Link-Latch
6	105-9986	1	Cover-Lever, Chute (LH)
7	105-9988	1	Lever-Cable, Deflector
8	130-9614	1	Cable-Release, Chute
9	130-9613	1	Cable-Control, Deflector
10	105-9995	1	Screw-Shoulder
11	106-4479	1	Rod-Control, Chute
12	106-7280	1	Cap-Lever
13	106-7281	1	Lever-Control, Chute (RH)
14	106-7282	1	Lever-Control, Chute (LH)
15	106-7292	1	Cover-Lever, Chute (RH)
16	106-7295	1	Plate-Friction
17	106-7310	1	Pawl-Latch
18	107-3002	1	Washer-Nylon
19	3290-456	1	Washer-Belleville
20	3296-29	1	Nut-Lock, NI
22	120-2348	1	Rod-Chute
23	3229-30	3	Screw-CARR
24	3296-73	3	Nut-Lock, NI
25	32144-85	1	Screw-HWH

Handle and Control Assembly

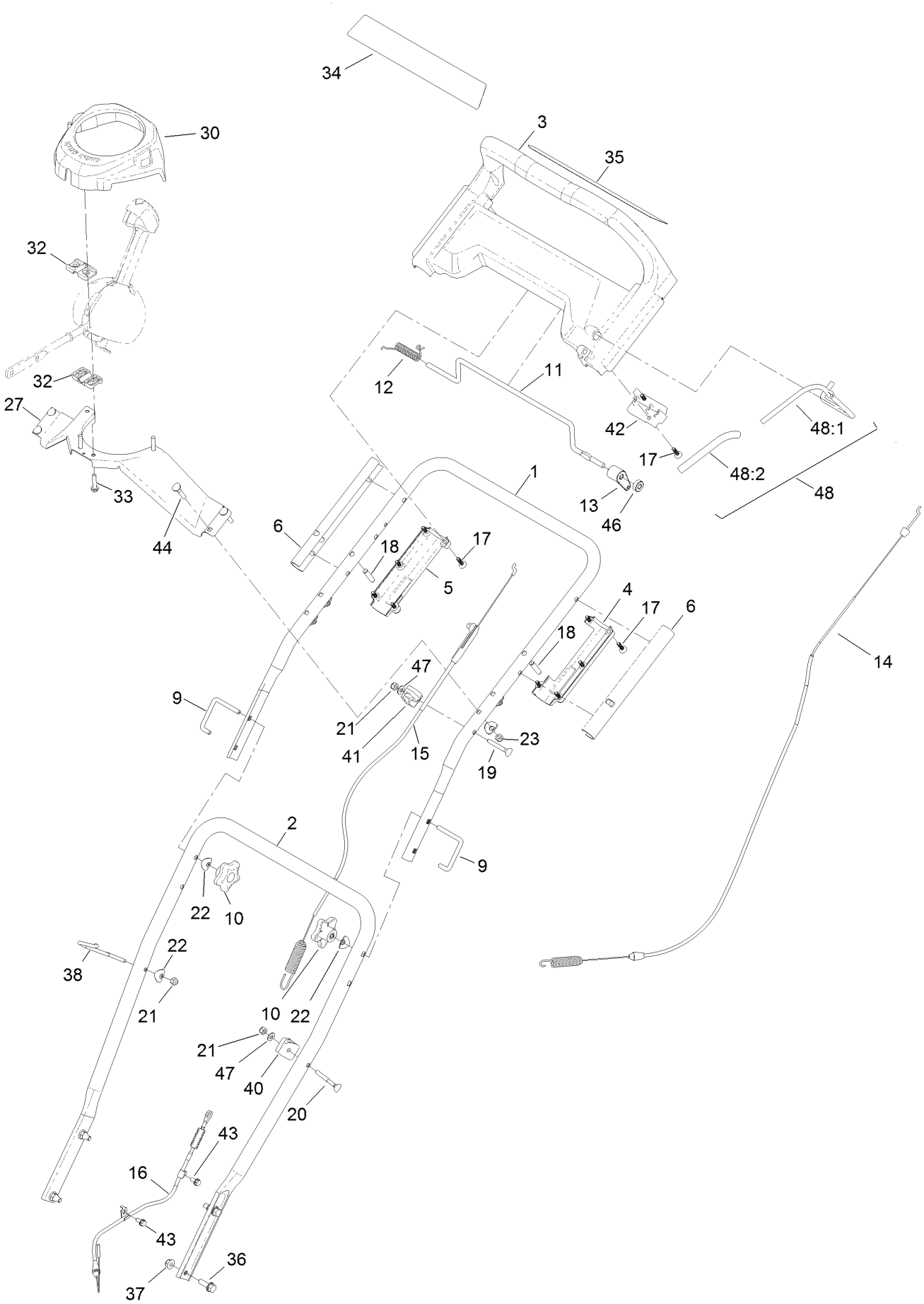

Handle and Control Assembly (continued)

Ref.	Part Number	Qty.	Description
1	120-2333-03	1	Handle-Upper
2	120-2334-03	1	Handle-Lower
3	131-5921	1	Handle
4	120-2336	1	Handle-Bottom, LH
5	131-1770	1	Handle-Bottom, RH
6	120-2343	2	Sleeve Handle
9	108-4887	2	Lock-Handle
10	106-4161	2	Knob-Handle
11	99-1588	1	Bar-Control, Traction
12	121-9118	1	Spring-Torsion
13	131-5917	1	Lever-Traction
14	131-5924	1	Cable-Transmission
15	120-2338	1	Cable-Rotor, Upper
16	131-1753	1	Cable-Rotor, Lower
17	120-2349	12	Screw
18	131-1771	2	Pin-Dowel
19	95-4453	1	Screw
20	92-2269	1	Screw-Handle
21	3296-73	3	Nut-Lock, NI
22	107-3844	7	Washer
23	3296-73	4	Nut-Lock, NI
27	120-2342-03	1	Bracket-Chute, Control
30	131-5906	1	Cover Top
32	105-9987	2	Support-Rod
33	46-8092	4	Screw-Plastite
34	131-1788	1	Decal-Display
35	131-1785	1	Decal-Control, Panel
36	3234-29	4	Screw-HHF
37	104-8300	4	Nut-HF, NI
38	131-5913	1	Guide-Rope
40	92-7729	1	Anchor-Cable, Upper
41	131-5903	1	Cable-Guide
42	131-5901	1	Bail-Mount
43	32144-4	2	Screw-HWH
44	117-7737	4	Screw-Handle
46	130-2343	1	Spacer
47	3256-1	2	Washer-Flat
48	131-5943	1	Bail ASM
48:1		1	Bail-Auger ●
48:2	131-5902	1	Cover-Bail

● Not serviced separately

Attachments and Accessories

For 36003 SnowMaster 824 QXE Snowthrower

Product Name	Model/Part
Engine Maintenance Kit	138-0700
Case of 24 20-Ounce Bottles 5W30 Winter Oil	38908
Toro Snow Oil 0W30 Synthetic 20-Ounce Bottle	38913
Toro 2-Stage Cover	490-7466

Notes:

Notes:

Notes:

TORO®

Count on it.