Form No. 3415-624 Rev B

TORO®

Count on it.

Parts Catalog

Power Clear® 721 R

Snowthrower

Model No. 38741—Serial No. 402082000 and Up

Register at www.Toro.com.
Original Instructions (EN)

3415-624 B

Ordering Replacement Parts

To order replacement parts, please supply the part number, the quantity, and the description of each part desired.

Understanding Reference Numbers

Each identified part in an illustration has a reference number. The reference number for a part also appears in the parts list, along with other information about the part.

This catalog uses two special reference number formats, one to indicate parts in a service assembly and another to indicate the quantity of a given part in an illustration.

Service Assembly Reference Numbers

Parts in service assemblies have reference numbers in the form a:b. The a represents the reference number of the entire service assembly and the b represents a sequential number unique to each part within the service assembly.

For example, a wheel assembly might be identified by reference number 6, the tire by 6:1, the valve by 6:2, and the wheel by 6:3. When you order the assembly identified by reference number 6, you receive all parts identified by reference numbers 6:1,6:2, and 6:3. However, you may also order any part individually. Reference numbers of this type appear in illustration and in parts lists.

Reference Numbers Indicating Quantity

In an illustration, if a reference number indicates more than one part, the reference number has the form nX y. The n represents the quantity of the part, the X is the multiplication symbol, and the y represents the reference number.

For example, in an illustration, the reference number 2X 37 means that two of the parts identified by reference number 37 are indicated.

Contents

Main Frame, Chute and Wheel Assembly 4
Rotor and Rotor Drive Assembly 6
Rotor Assembly 8
Engine Assembly 10
Engine Assembly No. 1 12
Engine Assembly No. 2 14
Engine Assembly No. 3 16
Shroud and Fuel Tank Assembly 18
Chute Control Assembly 20
Discharge Chute Control Assembly 22
Handle Control Assembly 24
Attachments and Accessories 26

© 2017—The Toro® Company
8111 Lyndale Avenue South
Bloomington, MN 55420

Contact us at www.Toro.com.
Printed in the USA.
All Rights Reserved

Main Frame, Chute and Wheel Assembly

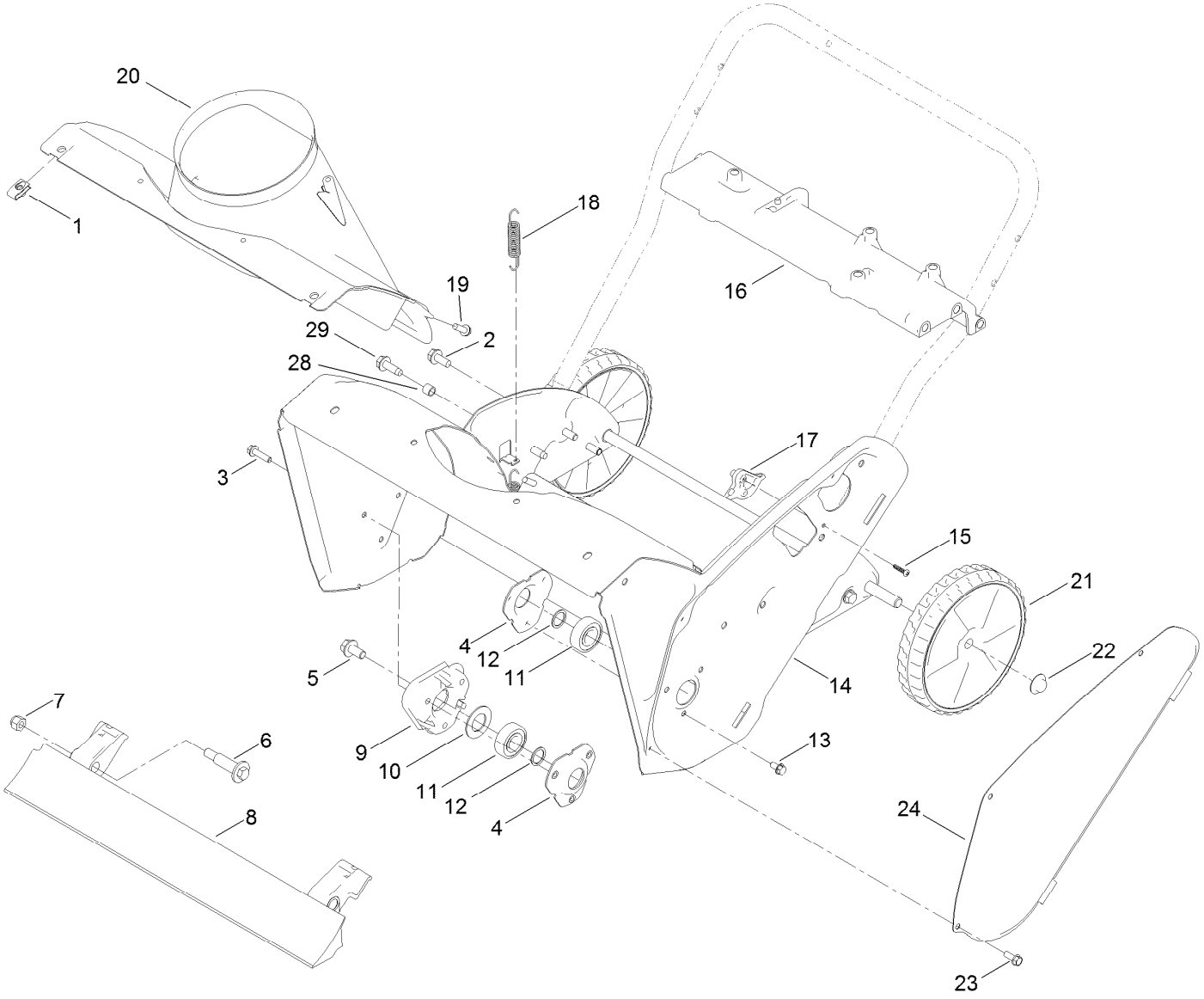

Main Frame, Chute and Wheel Assembly (continued)

Ref.	Part Number	Qty.	Description
1	107069	2	Clip
2	32144-11	4	Screw-HWHTF
3	32144-86	3	Screw-HWHTF
4	136-7134	2	Flange-Bearing
5	110-9380	1	Screw-HWH
6	136-7198	2	Bolt-Shoulder
7	3296-39	2	Nut-Lock, NI
8	133-5585	1	Blade-Scraper
9	114-3781	1	Spacer-Bearing, RH
10	110-9353	1	Washer-Rubber
11	100-1048	2	Bearing-Ball
12	52-7280	2	Washer-Thrust
13	32144-4	3	Screw-HWH
14	108-4868-03	1	Housing-Auger
15	94-4496	1	Screw-PPH
16	130-9765	1	Brace-Frame
17	108-4919	1	Guide-Cable, Clutch
18	108-4906	2	Spring-Extension
19	46-8091	3	Screw-HWH
20	108-4871	1	Chute-Lower
21	117-2309	2	Wheel ASM
22	32112-14	2	Nut-Push
23	32144-85	3	Screw-HWH
24	108-4893-03	1	Cover-Belt
28	136-7148	2	Spacer-Grommet
29	130-9795	2	Screw-HWHTF

Rotor and Rotor Drive Assembly

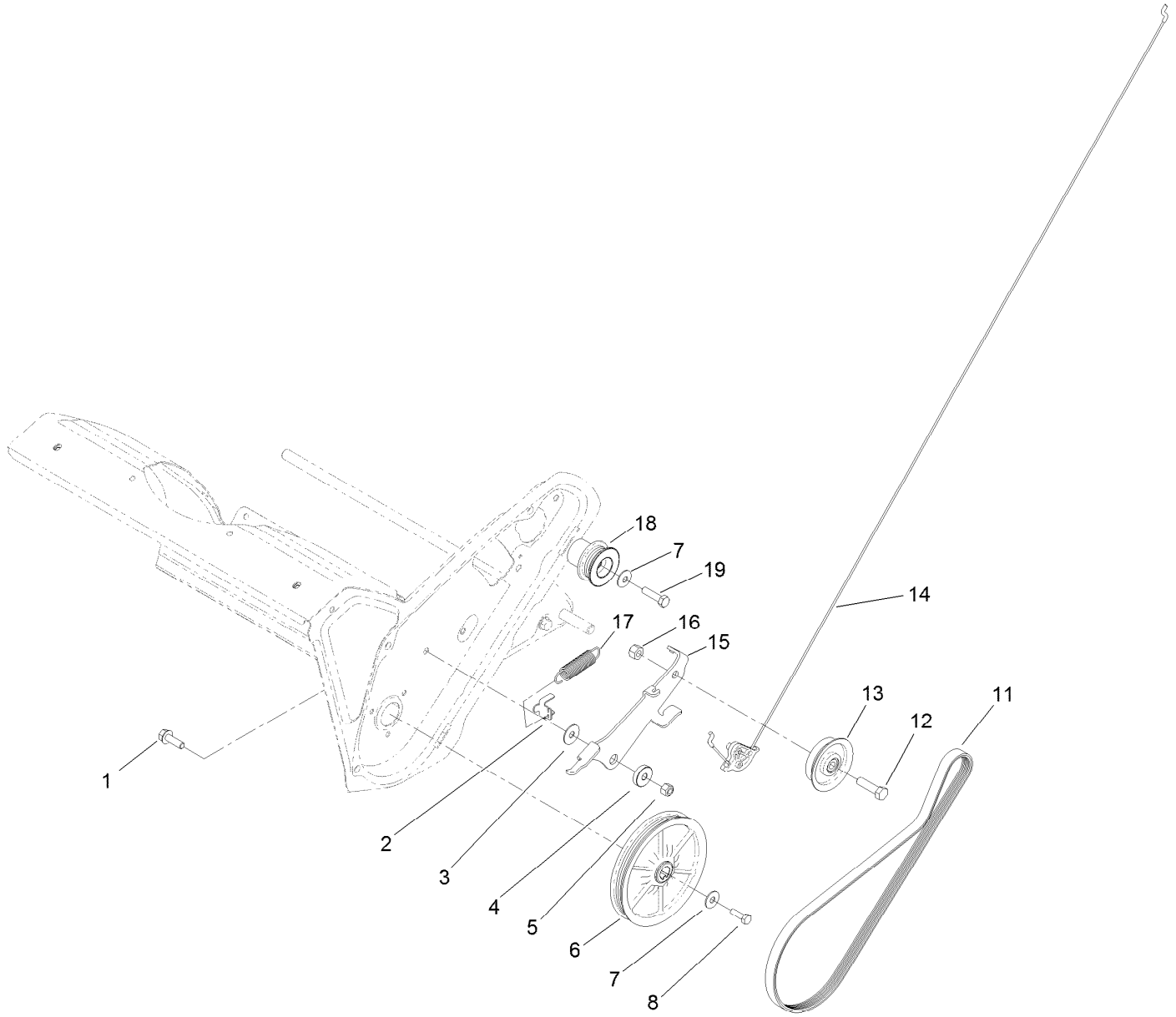

Rotor and Rotor Drive Assembly (continued)

Ref.	Part Number	Qty.	Description
1	3234-29	1	Screw-HHF
2	136-7133	1	Clip-Spring
3	108-4925	1	Washer
4	108-4916	1	Bushing-Pivot
5	3296-29	1	Nut-Lock, NI
6	121-6624	1	Pulley
7	3290-456	2	Washer-Belleville
8	9080046	1	Screw-HH
11	121-6622	1	Belt-Drive
12	323-29	1	Screw-HH
13	114-3785	1	Pulley-Idler
14	117-9145	1	Cable-Clutch
15	136-7138	1	Arm-Idler
16	32152-2	1	Nut-Lock, Cone
17	121-6630	1	Spring-Extension
18	125-7927	1	Pulley-Engine
19	121-6646	1	Screw-HH

Rotor Assembly

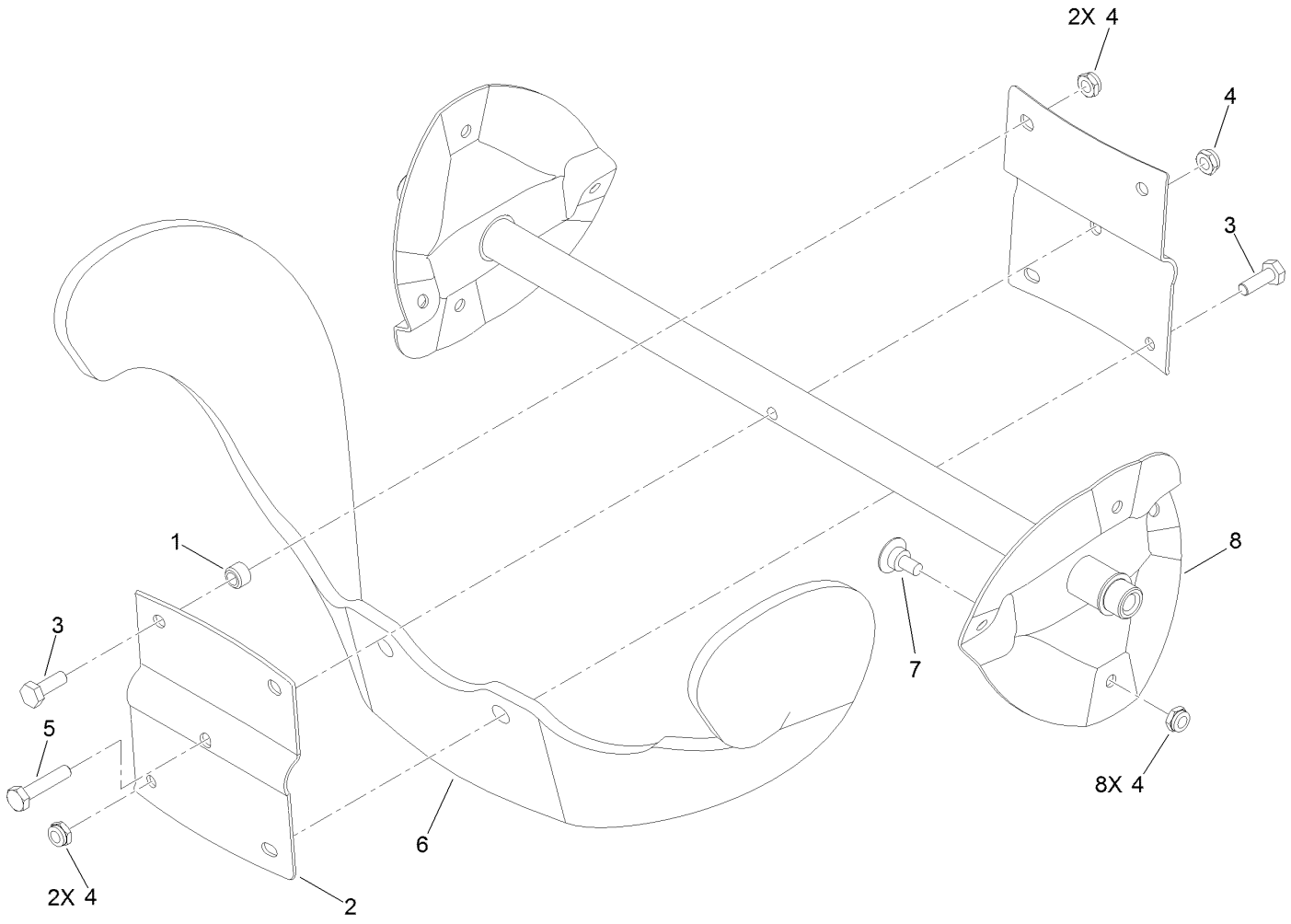

Rotor Assembly (continued)

Ref.	Part Number	Qty.	Description
1	55-9370	4	Spacer-Blade, Rotor
2	66-6600-03	2	Half-Rotor
3	321-4	4	Screw-HH
4	3296-56	13	Nut-Lock, NI
5	321-8	1	Screw-HH
6	99-9313	2	Blade-Rotor
7	84-1971	8	Screw
8	131-6490	1	Rotor Kit

Engine Assembly

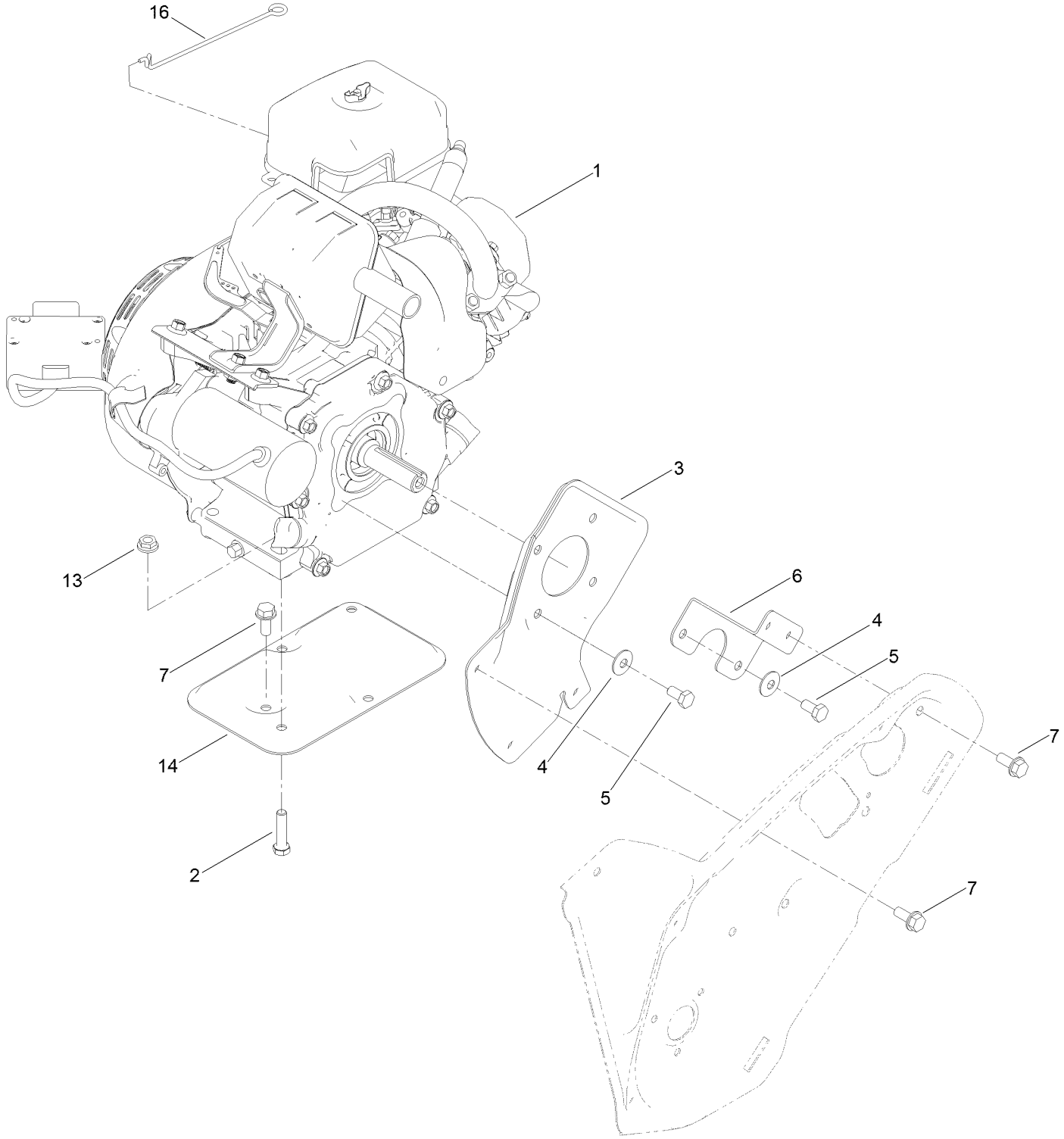

Engine Assembly (continued)

Ref.	Part Number	Qty.	Description
1	121-4224	1	Engine-170Fs-2
2	322-17	2	Screw-HH
3	108-4892-03	1	Plate-Engine, PTO
4	3290-456	4	Washer-Belleville
5	33114-016	4	Screw-HH
6	110-9354-03	1	Support-Engine, Side
7	32144-11	7	Screw-HWHTF
13	32128-20	2	Nut-HF
14	117-6037-03	1	Support-Engine
16	136-7140	1	Link-Choke

Engine Assembly No. 1

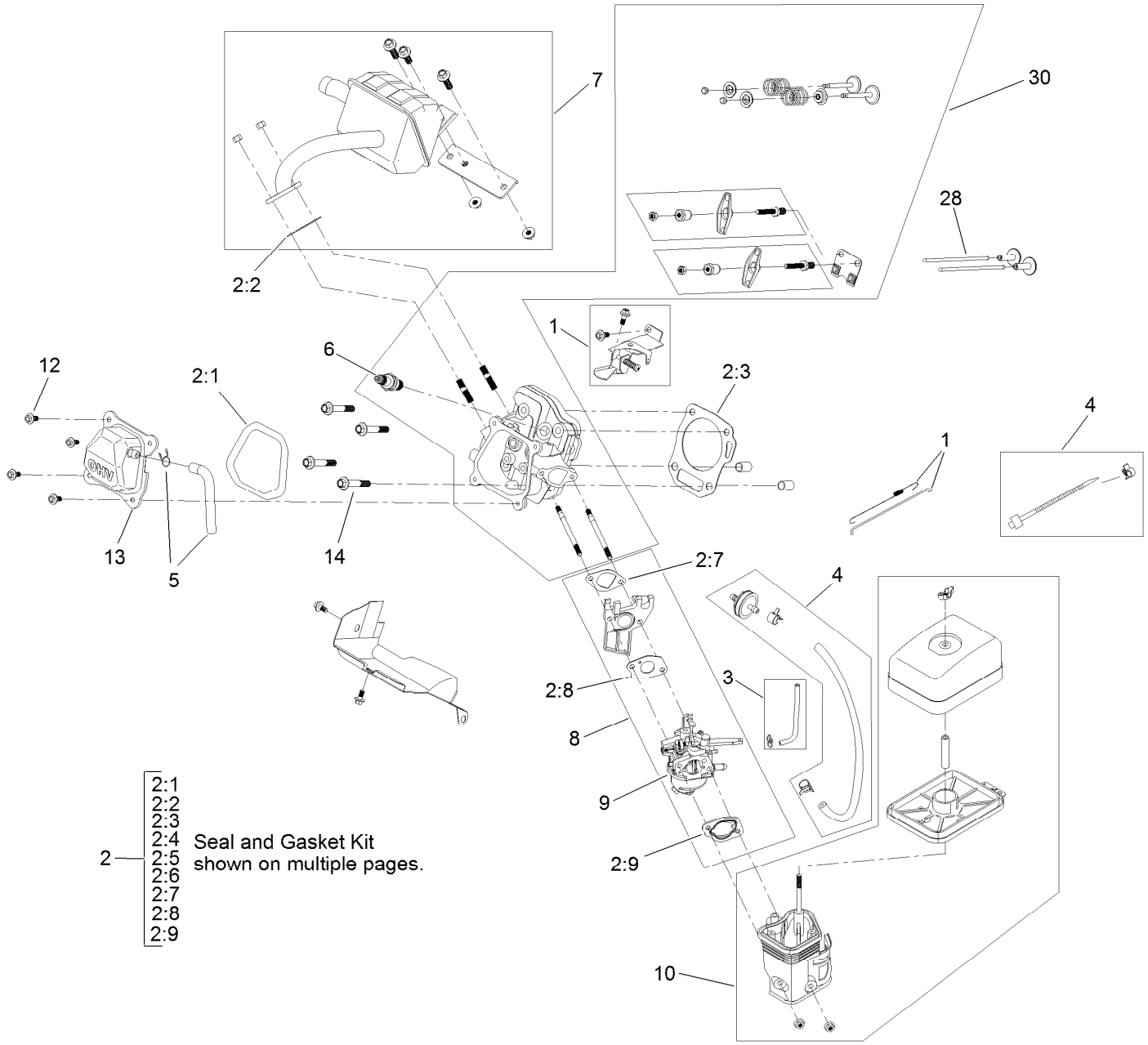

Engine Assembly No. 1 (continued)

Ref.	Part Number	Qty.	Description
1	136-7765	1	Governor Kit
2	127-9001	1	Gasket And Seal Kit
2:1	121-0109	1	Gasket-Cover, Valve
2:2	121-0167	1	Gasket-Exhaust
2:3	127-9000	1	Gasket-Head, Cylinder
2:4	121-0208	1	Seal-Oil
2:5	121-0209	1	Seal-Oil
2:6	121-0105	1	Gasket-Cover, Crankcase
2:7	121-0076	1	Gasket-Carburetor
2:8	121-0078	1	Gasket-Carburetor
2:9	121-0080	1	Gasket-Carburetor
3	127-9376	1	Primer Line Kit
4	121-4299	1	Fuel Line Kit
5	119-1921	1	Breather Tube Kit
6	119-1901	1	Plug-Spark
7	121-4297	1	Muffler Kit
8	127-9008	1	Carburetor Kit
9	127-9089	1	Carb Repair Kit With Gaskets
10	121-4282	1	Heater Box Kit
12	120-4454	4	Screw-HHF
13	121-0499	1	Valve Cover ASM
14	121-4110	4	Screw-HHF
28	121-4121	2	Rod-Push
30	133-9839	1	Complete Head ASM
99	127-9037	1	High Altitude Kit-Pc 721 ●

● Not illustrated

Engine Assembly No. 2

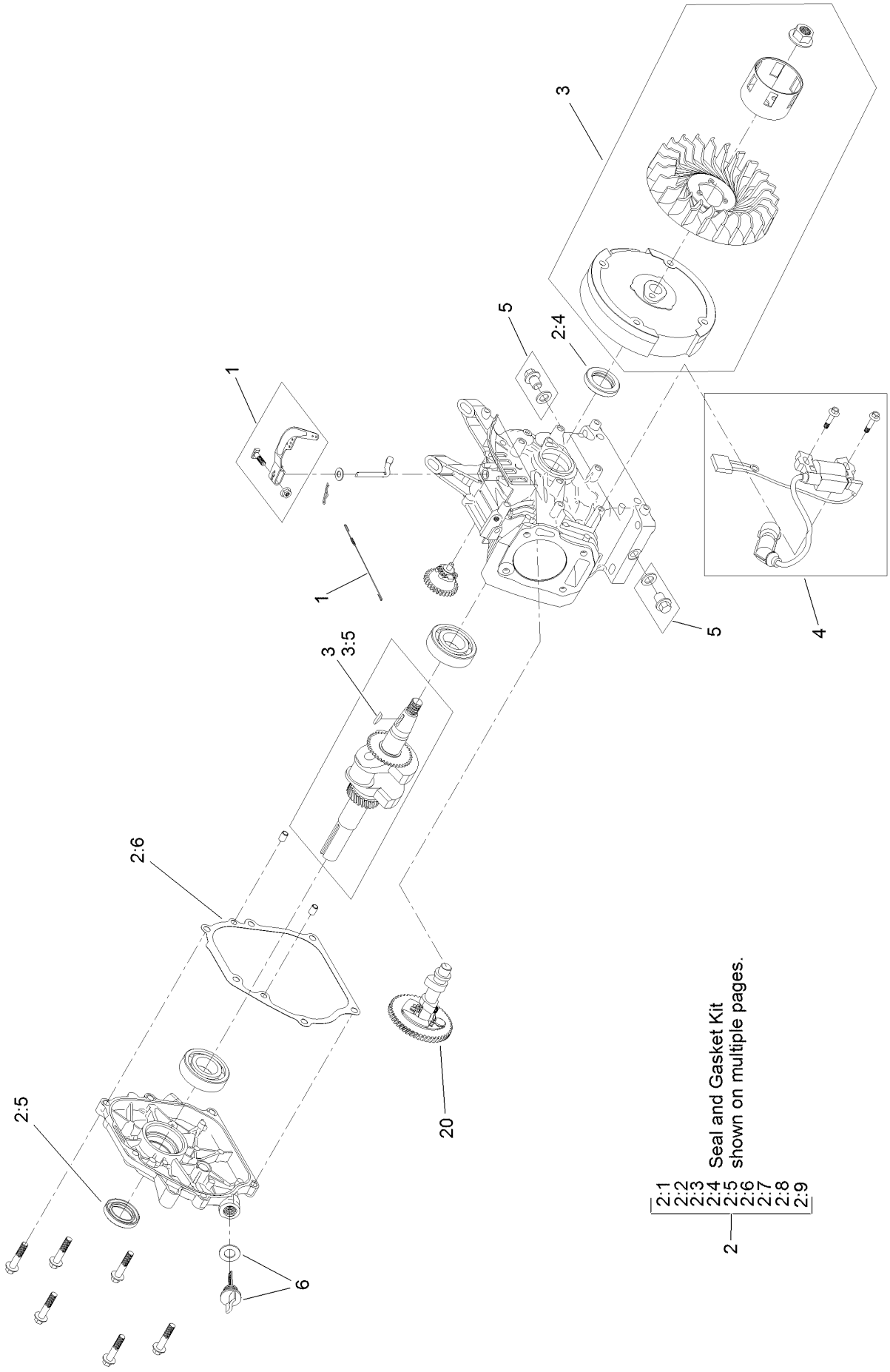

Engine Assembly No. 2 (continued)

Ref.	Part Number	Qty.	Description
1	136-7765	1	Governor Kit
2	127-9001	1	Gasket And Seal Kit
2:1	121-0109	1	Gasket-Cover, Valve
2:2	121-0167	1	Gasket-Exhaust
2:3	127-9000	1	Gasket-Head, Cylinder
2:4	121-0208	1	Seal-Oil
2:5	121-0209	1	Seal-Oil
2:6	121-0105	1	Gasket-Cover, Crankcase
2:7	121-0076	1	Gasket-Carburetor
2:8	121-0078	1	Gasket-Carburetor
2:9	121-0080	1	Gasket-Carburetor
3	127-9004	1	Recoil Flywheel Kit
3:5	120-4320	1	Key-Woodruff
4	136-7766	1	Ignition Kit
5	119-1923	2	Drain Plug Kit
6	127-9374	1	Dipstick And O-Ring Kit
20	133-9836	1	Camshaft

Engine Assembly No. 3

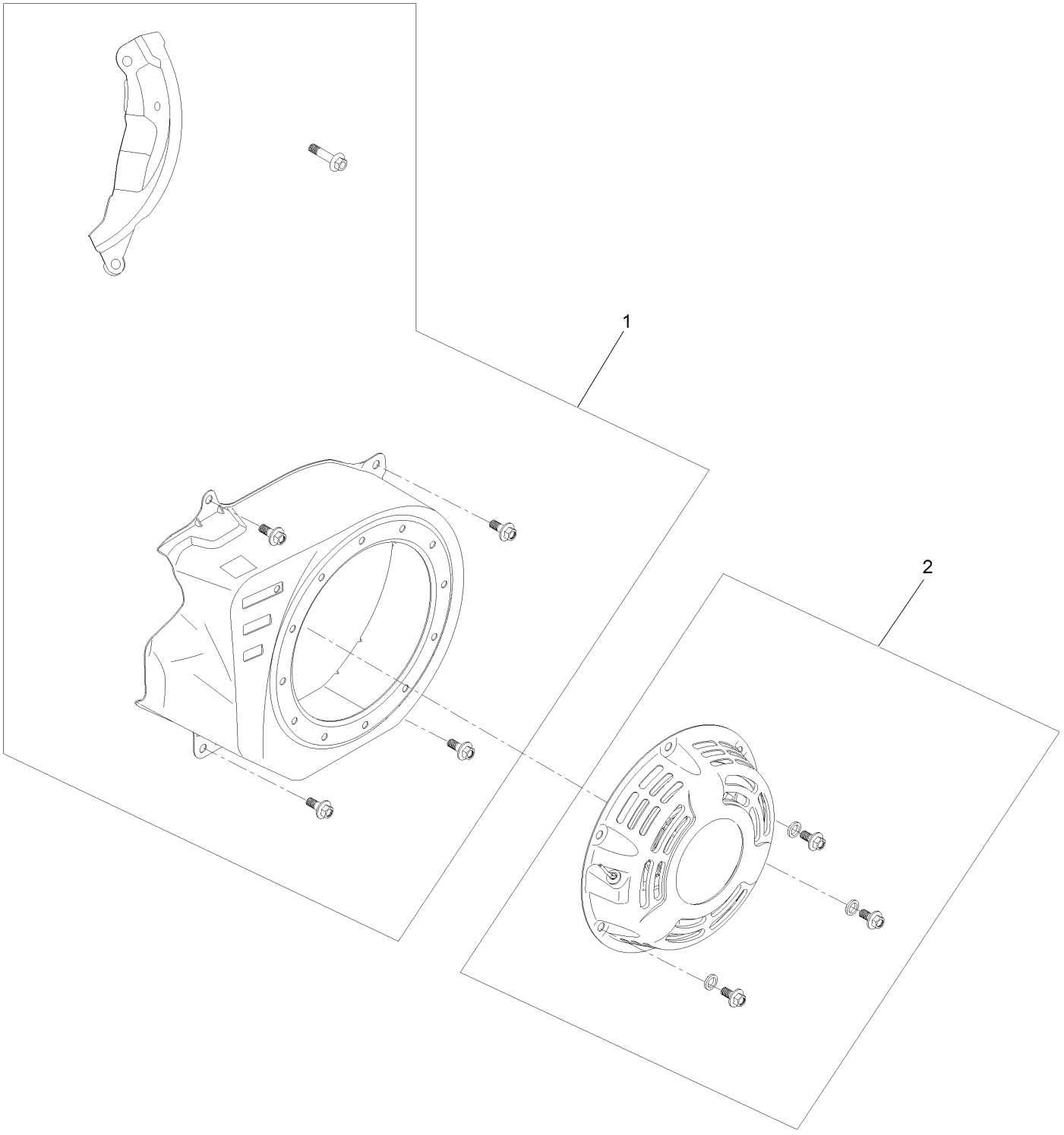

Engine Assembly No. 3 (continued)

Ref.	*Part Number*	*Qty.*	*Description*
1	127-9010	1	Blower Shroud Kit
2	121-4252	1	Recoil Kit

Shroud and Fuel Tank Assembly

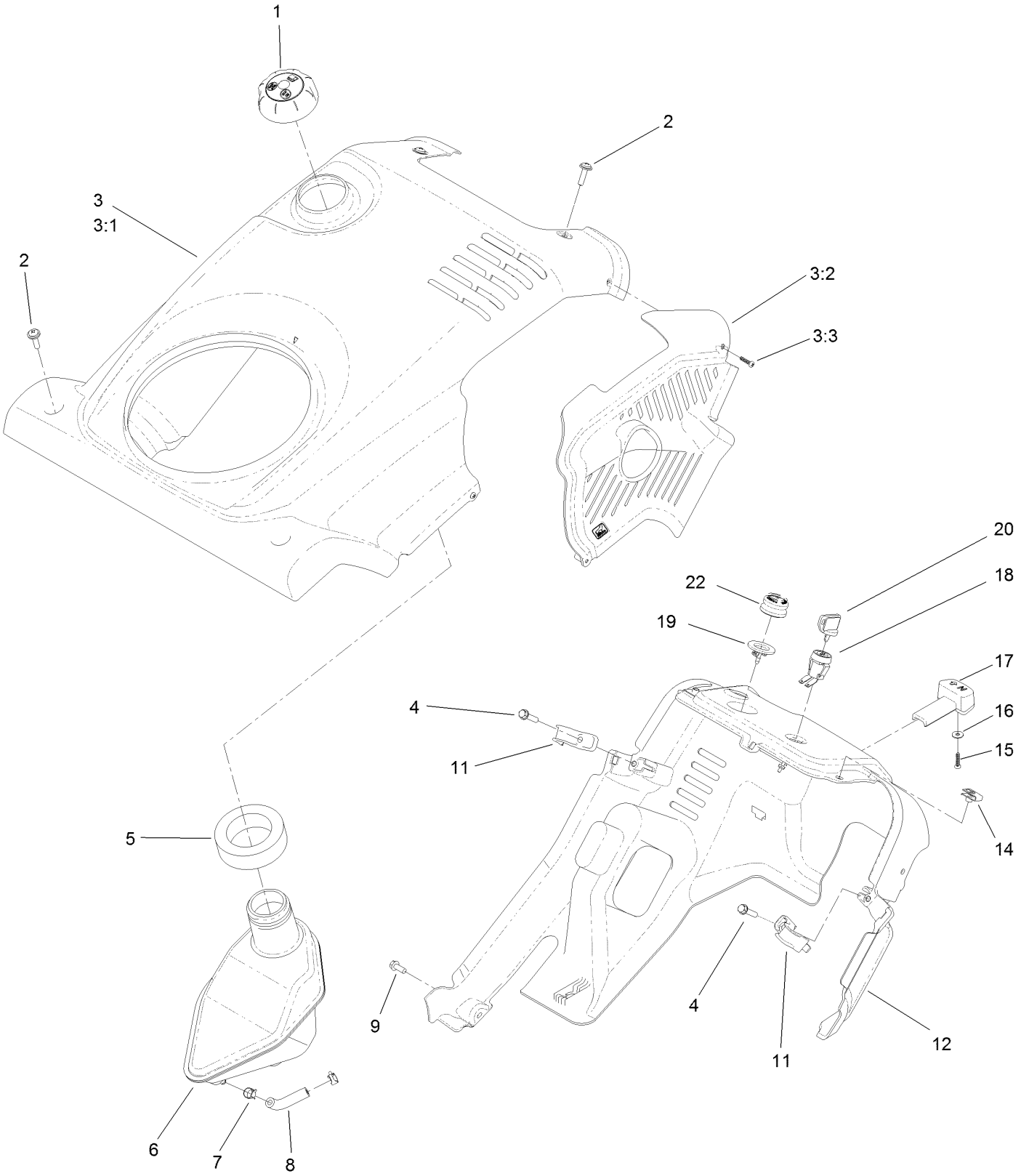

Shroud and Fuel Tank Assembly (continued)

Ref.	Part Number	Qty.	Description
1	131-6458	1	Cap-Gas
2	110-9361	4	Screw-PPH
3	127-5978	1	Shroud ASM
3:1	127-5979	1	Shroud
3:2	117-6035	1	Baffle-Exhaust
3:3	94-4496	2	Screw-PPH
4	46-8092	2	Screw-Plastite
5	114-3773	1	Seal-Tank
6	120-9848	1	Tank-Fuel, Gas
7	2412-98	2	Clamp-Hose
8	109-0660	1	Hose-Fuel
9	32144-85	1	Screw-HWH
11	108-4947	2	Clip-Shroud
12	117-6036	1	Shroud-Lower
14	107069	2	Clip
15	94-4496	1	Screw-PPH
16	3256-49	1	Washer-Plain
17	117-9100	1	Knob-Choke
18	40-5940	1	Switch
19	44-2750	1	Body-Primer
20	63-8360	1	Key-Ignition
22	66-7460	1	Bulb-Primer

Chute Control Assembly

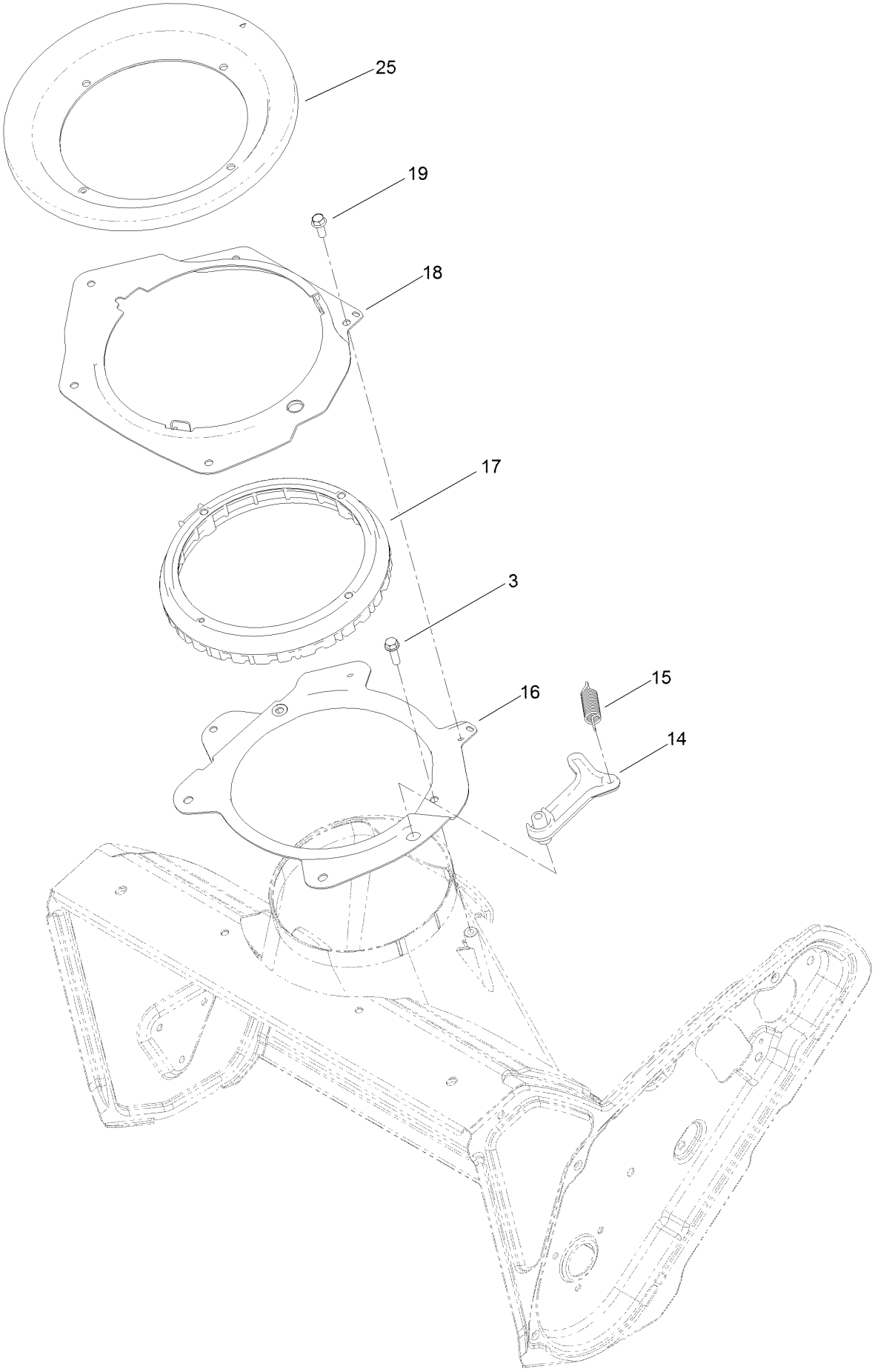

Chute Control Assembly (continued)

Ref.	Part Number	Qty.	Description
3	46-8091	4	Screw-HWH
14	108-4926	1	Pawl-Detent
15	80-4600	1	Spring-Extension
16	108-4883-03	1	Ring-Support, Chute
17	108-4922	1	Ring-Chute, Detent
18	108-4874-03	1	Retainer-Ring, Chute
19	32144-85	2	Screw-HWH
25	114-3772	1	Seal-Ring, Chute

Discharge Chute Control Assembly

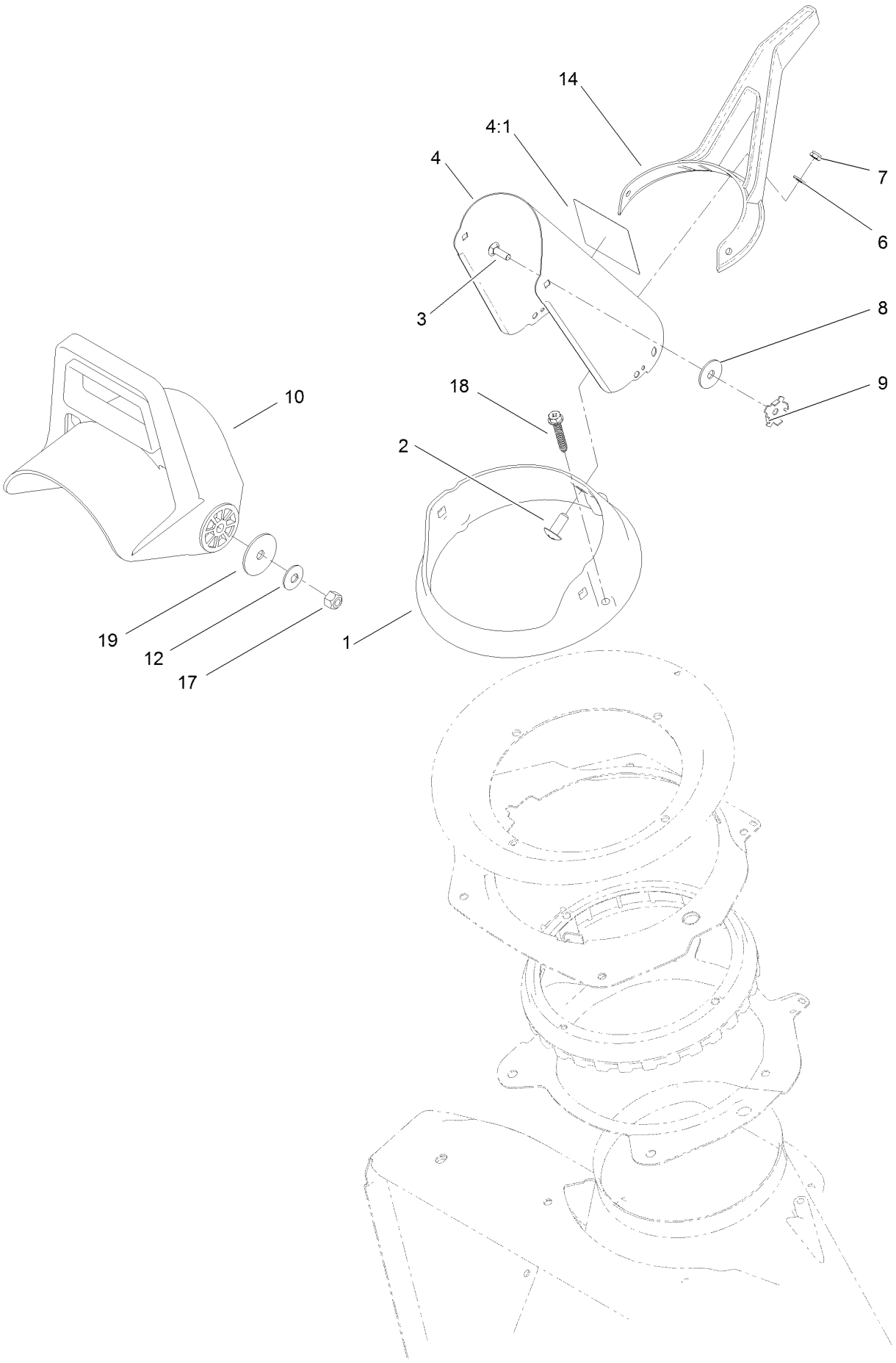

Discharge Chute Control Assembly (continued)

Ref.	Part Number	Qty.	Description
1	112-1546	1	Ring-Chute
2	100-5487	3	Screw-PTH
3	3230-22	2	Screw-CARR
4	120-0131	1	Discharge Chute ASM
4:1	115-5660	1	Decal-Danger, CE
6	3256-70	3	Washer-Flat
7	3296-47	3	Nut-Lock, NI
8	20-4320	2	Washer-Rubber
9	136-7185	2	Plate-Friction
10	56-2680	1	Chute-Deflector
12	3290-456	2	Washer-Belleville
14	94-9914	1	Handle-Control, Chute
17	3296-29	2	Nut-Lock, NI
18	108-4946	3	Screw-Plastite
19	3256-68	2	Washer-Flat

Handle Control Assembly

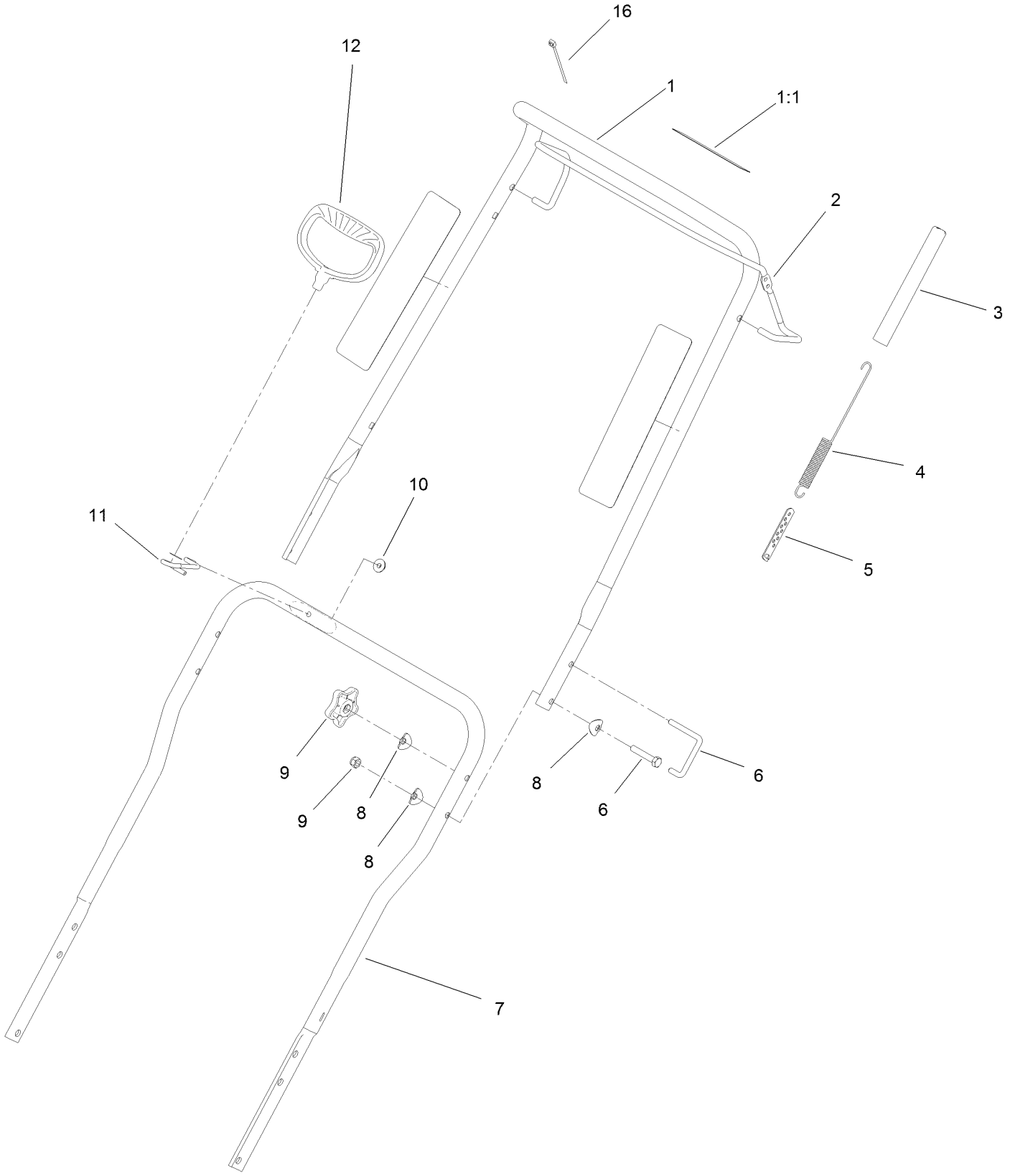

Handle Control Assembly (continued)

Ref.	Part Number	Qty.	Description
1	117-9139	1	Upper Handle ASM
1:1	94-2577	1	Decal-Drive, Rotor
2	117-9136-03	1	Bail-Clutch
3	114-3796	1	Cover-Spring
4	125-1148	1	Spring-Extension, Clutch
5	71-5330	1	Adjuster-Cable, Clutch
6	136-7130	2	Lock-Handle
7	127-5956-03	1	Handle-Lower
8	107-3844	2	Washer
9	114-3779	2	Knob-Handle
10	114-3778	1	Nut-HF
11	136-7135	1	Guide-Rope
12	117-9104	1	Handle-Recoil
16	614249	2	Tie-Cable

Attachments and Accessories

For 38741 Power Clear 721 R Snowthrower

Product Name	Model/Part
High-Altitude Kit	127-9037
Engine Maintenance Kit	138-0699
Long Life Rotor Blade Kit	38205
Paddle Replacement Kit	38261
Case of 24 20-Ounce Bottles 5W30 Winter Oil	38908
Toro Snow Oil 0W30 Synthetic 20-Ounce Bottle	38913
Toro Single Stage Cover	490-7464
Plain Single Stage Cover	490-7465

Notes:



Count on it.