Form No. 3420-275 Rev A

TORO®

Count on it.

Parts Catalog

Commercial Walk-Behind Traction Unit

18HP Pistol-Grip Hydro Drive

Model No. 31914—Serial No. 400000000 and Up

Register at www.Toro.com.
Original Instructions (EN)

CE

3420-275 A

Ordering Replacement Parts

To order replacement parts, please supply the part number, the quantity, and the description of each part desired.

Understanding Reference Numbers

Each identified part in an illustration has a reference number. The reference number for a part also appears in the parts list, along with other information about the part.

This catalog uses two special reference number formats, one to indicate parts in a service assembly and another to indicate the quantity of a given part in an illustration.

Service Assembly Reference Numbers

Parts in service assemblies have reference numbers in the form a:b. The a represents the reference number of the entire service assembly and the b represents a sequential number unique to each part within the service assembly.

For example, a wheel assembly might be identified by reference number 6, the tire by 6:1, the valve by 6:2, and the wheel by 6:3. When you order the assembly identified by reference number 6, you receive all parts identified by reference numbers 6:1,6:2, and 6:3. However, you may also order any part individually. Reference numbers of this type appear in illustration and in parts lists.

Reference Numbers Indicating Quantity

In an illustration, if a reference number indicates more than one part, the reference number has the form nX y. The n represents the quantity of the part, the X is the multiplication symbol, and the y represents the reference number.

For example, in an illustration, the reference number 2X 37 means that two of the parts identified by reference number 37 are indicated.

Contents

Engine and Muffler Assembly 4
Muffler Shield Assembly No. 120-3238 6
Fuel Tank and Hose Assembly 8
Drive Assembly 10
Hydraulic Wheel Motor Assembly No. 1-603718 12
RH Hydraulic Pump Assembly No. 116-0943 14
LH Hydraulic Pump Assembly No. 116-0942 15
Parking Brake Assembly 16
Frame and Linkage Assembly 18
Hydraulic System Assembly 20
Lower Control Assembly 22
Control Handle Assembly 24
Control Panel Decal Assembly 26
Upper Handle Assembly 28
Harness and Battery Assembly 30
Attachments and Accessories 32

© 2018—The Toro® Company
8111 Lyndale Avenue South
Bloomington, MN 55420

Contact us at www.Toro.com.
Printed in the USA.
All Rights Reserved

Engine and Muffler Assembly

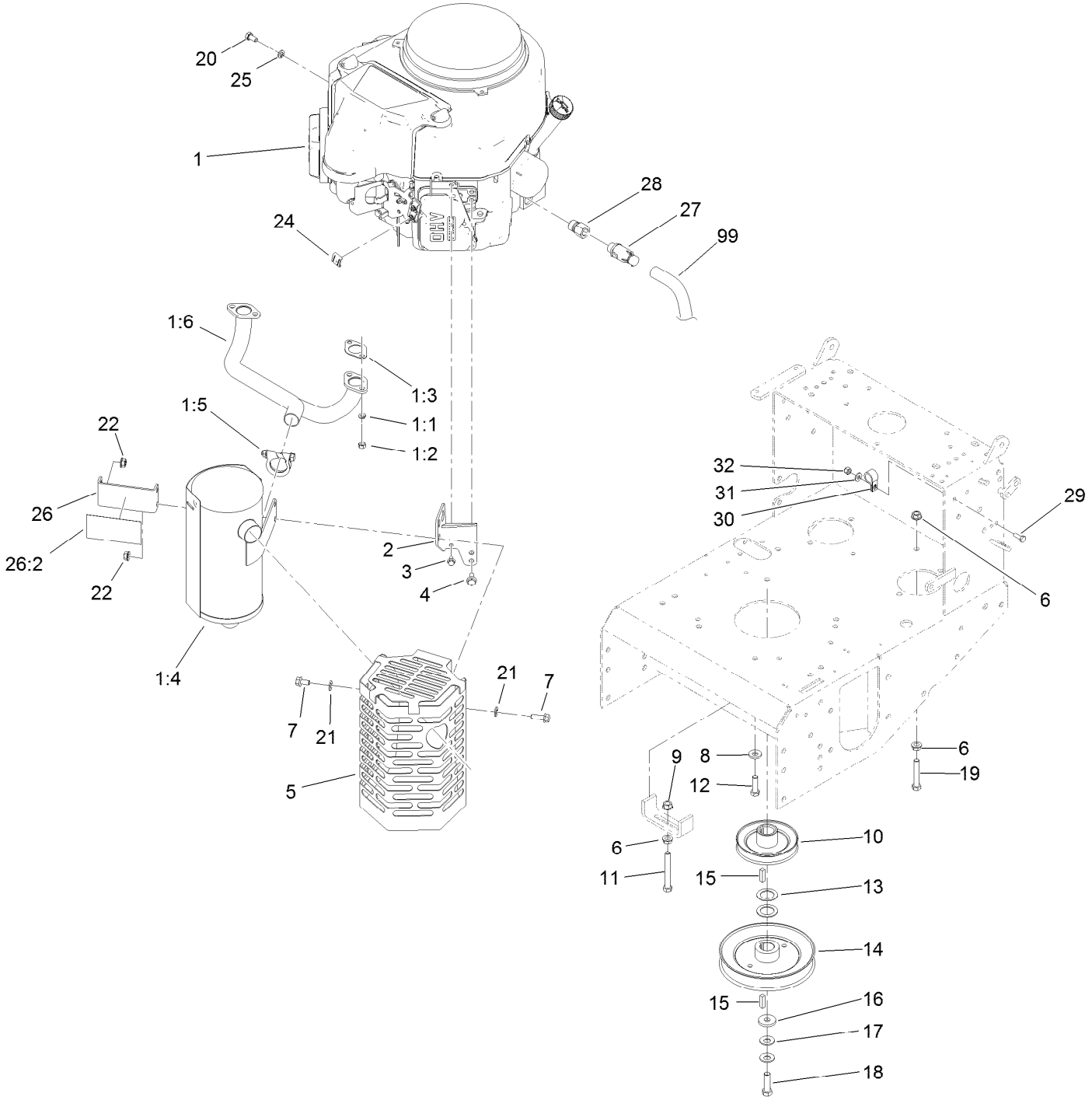

Engine and Muffler Assembly (continued)

Ref.	Part Number	Qty.	Description
1		1	Engine-Kawasaki-Fs541V ● ■
1:1	114-3550	4	Washer-Lock
1:2	114-3549	4	Nut
1:3	1-653313	2	Gasket-Exhaust
1:4	119-7800	1	Muffler-Engine
1:5	119-7801	1	Clamp-Muffler
1:6	119-7802	1	Manifold-Exhaust
2	117-8561-03	1	Bracket-Muffler
3	33103-012	1	Screw-HHF
4	33104-016	2	Screw-HHF
5	120-3238	1	Muffler Shield ASM
6	3290-357	11	Nut-HHF, Whiz
7	33104-025	4	Screw-HHF
8	98-5975	12	Washer-Belleville
9	32128-21	1	Nut-HF
10	1-653035	1	Pulley
11	323-14	1	Screw-HH
12	323-7	4	Screw-HH
13	1-523157	2	Washer-Spacer
14	110-4891	1	Pulley
15	1-807259	2	Key
16	1-373034	1	Washer
17	1-603610	2	Washer-Spring
18	116-3702	1	Screw-HH
19	323-11	1	Screw-HH
20	33114-016	1	Screw-HH
21	1-303334	4	Washer-Spring
22	117-1350	4	Nut-HF, Lock
24	81-1690	1	Clamp-Cable
25	3253-4	1	Washer-Lock
26	120-3245	1	Muffler Bracket ASM
26:2	120-3244	1	Foil-Shield, Bracket
27	120-4321	1	Valve-Drain, Oil
28	103-1966	1	Adapter
29	321-4	1	Screw-HH
30	2412-87	1	Clamp-Cable
31	3256-22	1	Washer-Flat
32	3296-42	1	Nut-Lock, NI
99	103-1964	1	Hose-Drain, Oil

● Not serviced separately

■ Obtain parts from www.kawpowerepc.com

Muffler Shield Assembly No. 120-3238

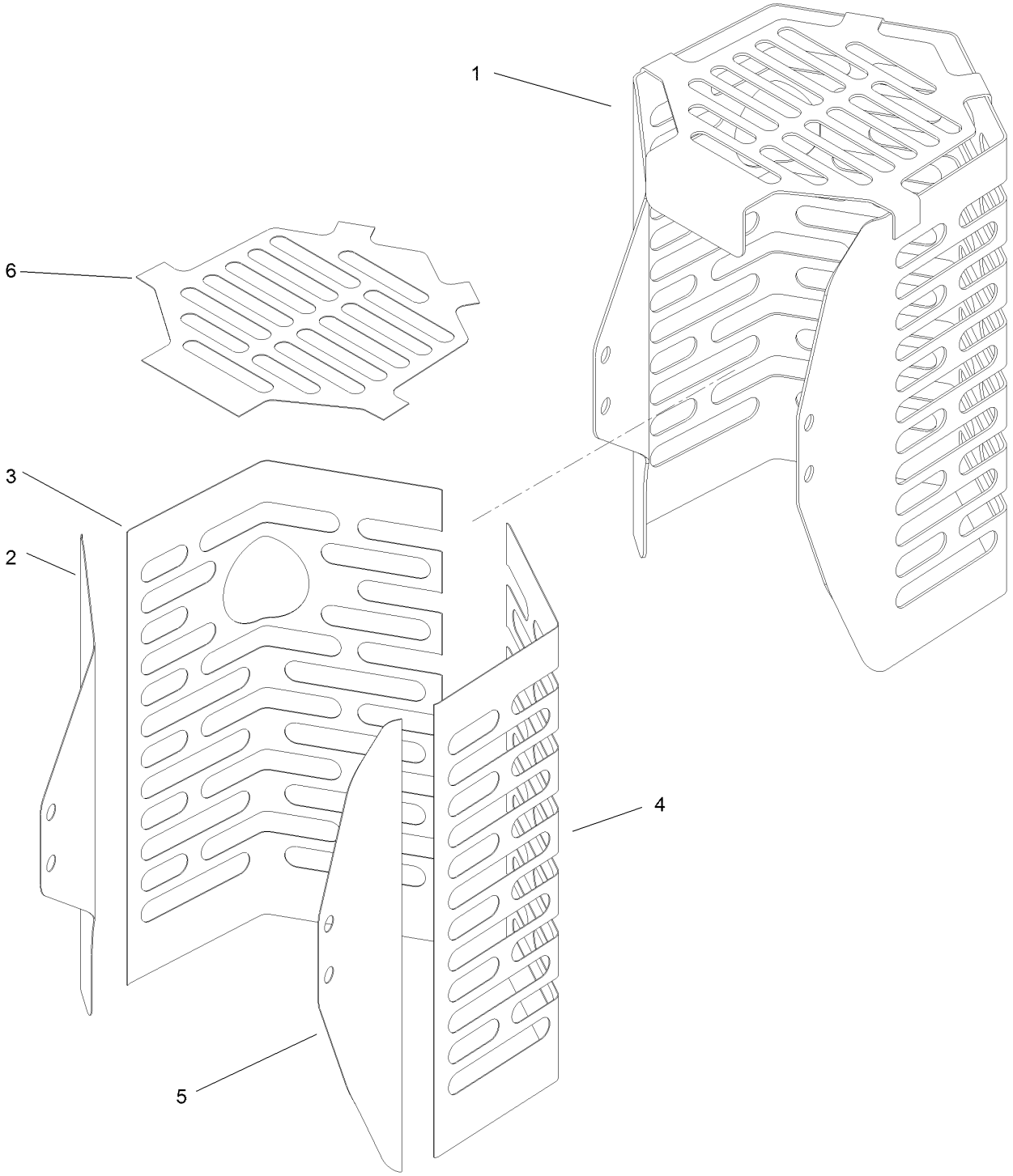

Muffler Shield Assembly No. 120-3238 (continued)

Ref.	Part Number	Qty.	Description
1		1	Shield-Muffler ●
2	120-3239	1	Foil-Shield, Left
3	120-3240	1	Foil-Shield, Side
4	120-3241	1	Foil-Shield, Front
5	120-3242	1	Foil-Shield, Right
6	120-3243	1	Foil-Shield, Top

● Not serviced separately

Fuel Tank and Hose Assembly

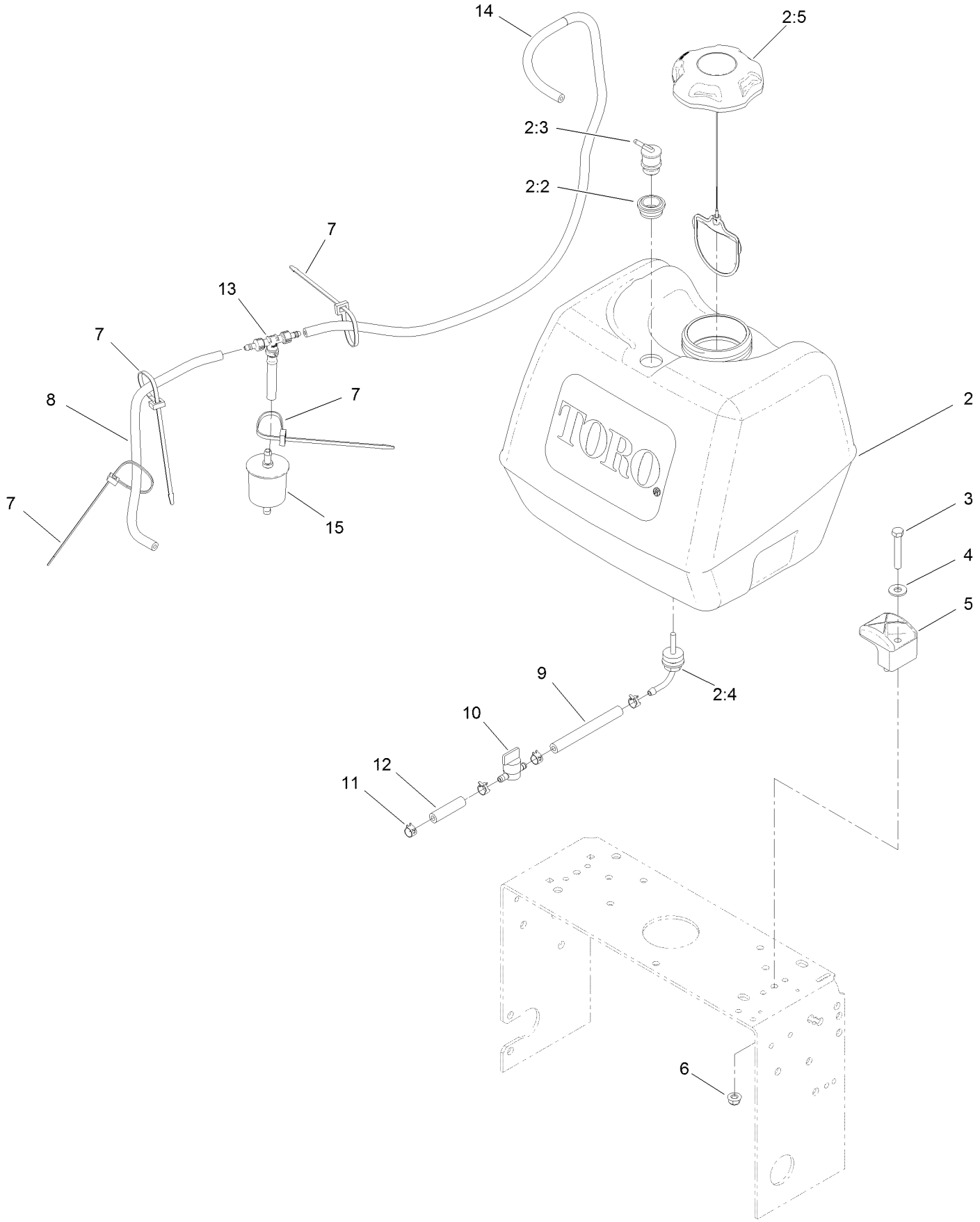

Fuel Tank and Hose Assembly (continued)

Ref.	Part Number	Qty.	Description
2	126-1526	1	Fuel Tank ASM
2:2	114-0284	1	Grommet
2:3	119-3547	1	Valve-Vent, Fuel
2:4	103-2605	1	Fitting-Fuel, Bulkhead
2:5	137-4119	1	Cap-Fuel, Ratcheting
3	322-10	2	Screw-HH
4	3256-3	2	Washer-Flat
5	107-4543	2	Clamp
6	104-8300	2	Nut-HF, NI

Ref.	Part Number	Qty.	Description
7	3290-378	4	Tie-Cable
8	115-7872	1	Hose-Fuel
9	109-0650	1	Hose-Fuel
10	1-603770	1	Valve-Fuel
11	2412-98	4	Clamp-Hose
12	99-9415	1	Hose-Fuel
13	116-5464	1	Tee And Check
14	116-4346	1	Hose-Emissions
15	120-2235	1	Filter-Fuel

Drive Assembly

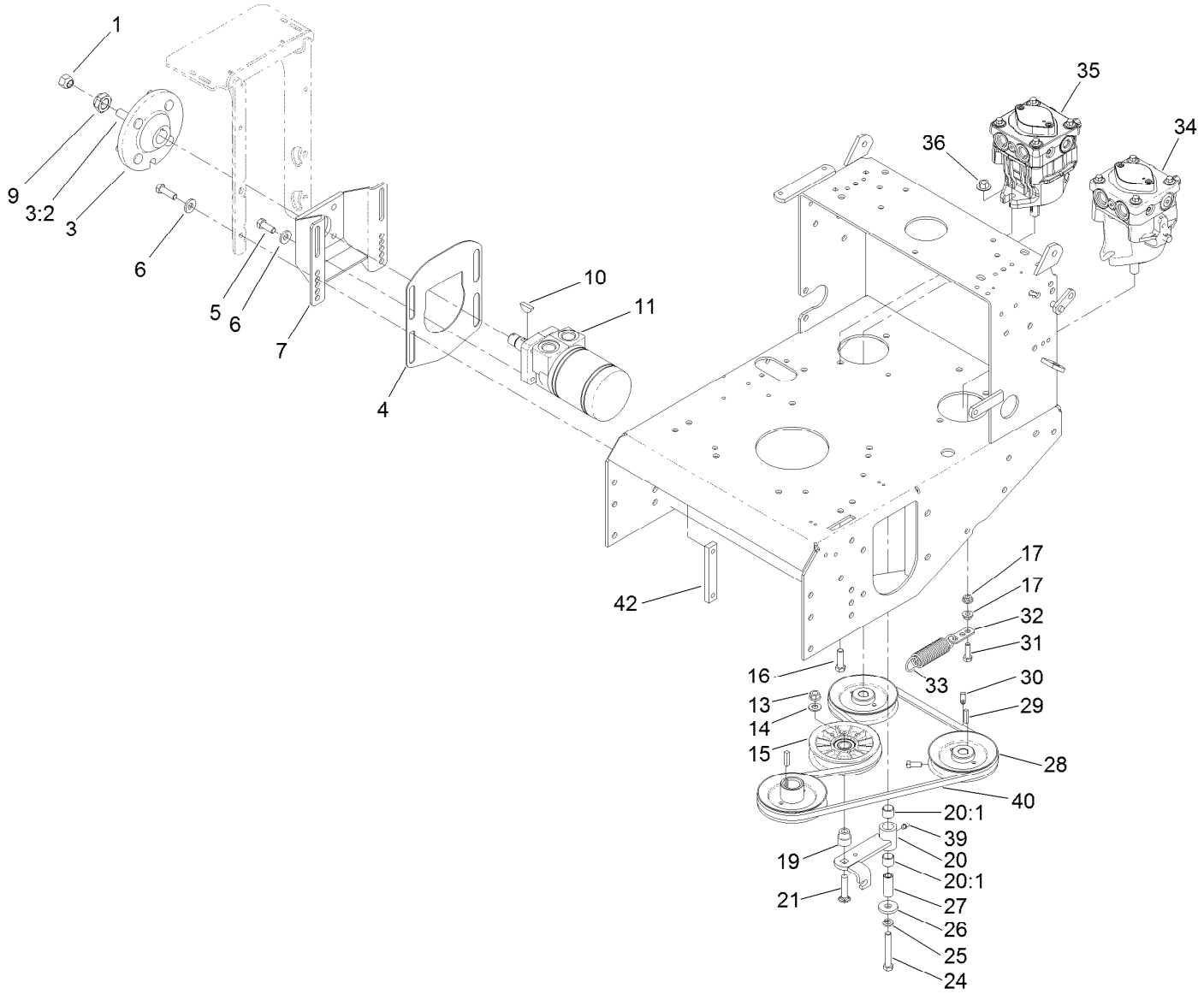

Drive Assembly (continued)

Ref.	Part Number	Qty.	Description
1	242-50	8	Nut-Lug
3	112-9049	2	Wheel Hub ASM
3:2	1-633926	4	Stud-Wheel
4	115-3805-01	2	Guard-Debris
5	323-6	12	Screw-HH
6	98-5975	16	Washer-Belleville
7	103-2289-01	2	Mount-Motor
9	116-2839	2	Nut-Lock
10	1-807019	2	Key-Woodruff
11	1-603718	2	HYD Motor ASM
13	32128-21	1	Nut-HF
14	3256-24	1	Washer-Flat
15	109-4077	1	Pulley-Idler, Flat
16	323-7	4	Screw-HH
17	32128-20	2	Nut-HF
19	1-603496	1	Bushing-Idler
20	1-602521	1	Idler Arm ASM
20:1	103-4681	2	Sleeve-Bearing

Ref.	Part Number	Qty.	Description
21	3231-29	1	Screw-CARR
24	323-12	1	Screw-HH
25	3253-21	1	Washer-Lock
26	1-373034	1	Washer
27	1-603044	1	Bushing
28	1-413010	2	Sheave ASM
29	1-807272	2	Key
30	120-6474	4	Screw-Set, SQH
31	322-5	1	Screw-HH
32	1-603801	1	Anchor-Spring
33	1-603402	1	Spring-Extension
34	116-0942	1	LH HYD Pump ASM
35	116-0943	1	RH HYD Pump ASM
36	32128-43	4	Nut-Flange
39	302-19	1	Fitting-Grease
40	106-2740	1	V-Belt
42	115-1023	4	Bar-Nut

Hydraulic Wheel Motor Assembly No. 1-603718

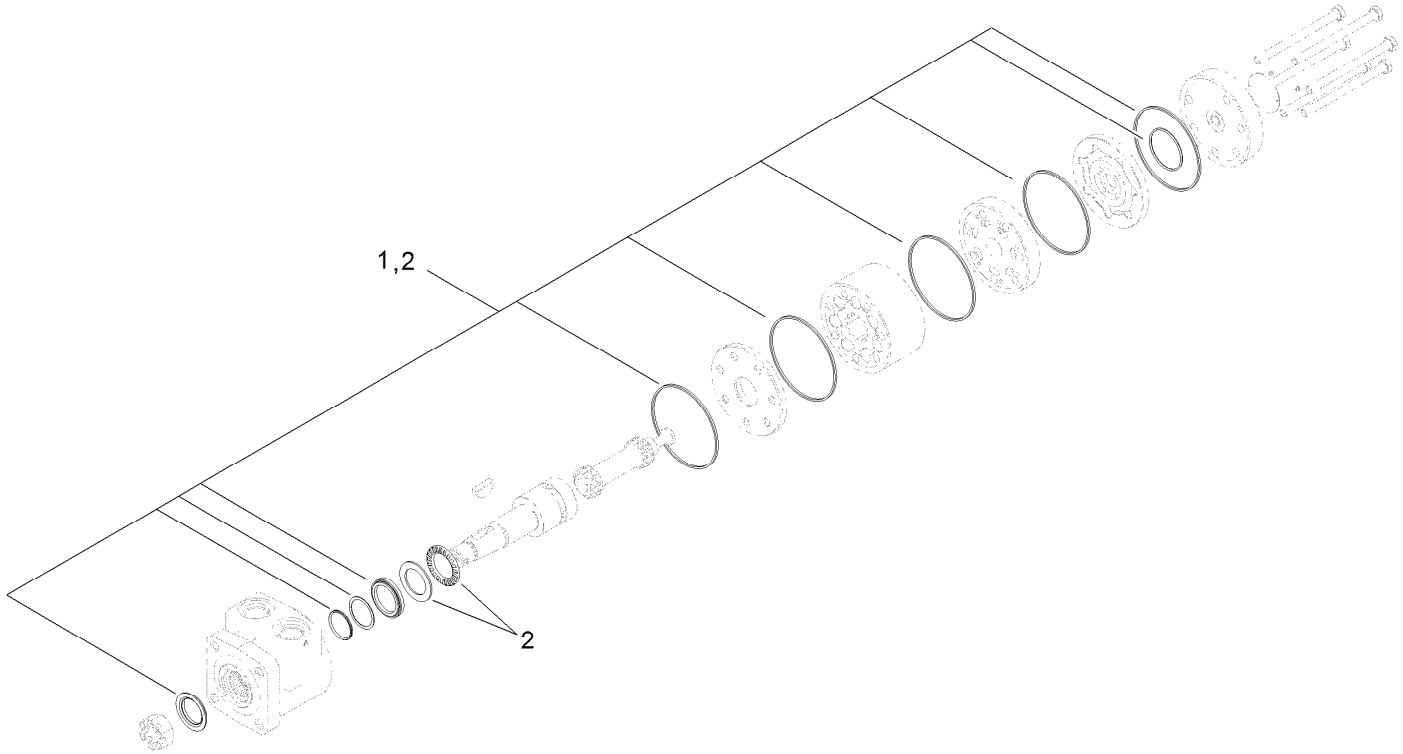

Hydraulic Wheel Motor Assembly No. 1-603718 (continued)

Ref.	Part Number	Qty.	Description
1	1-000119	1	Seal Kit
2	1-000138	1	Bearing And Seal Kit

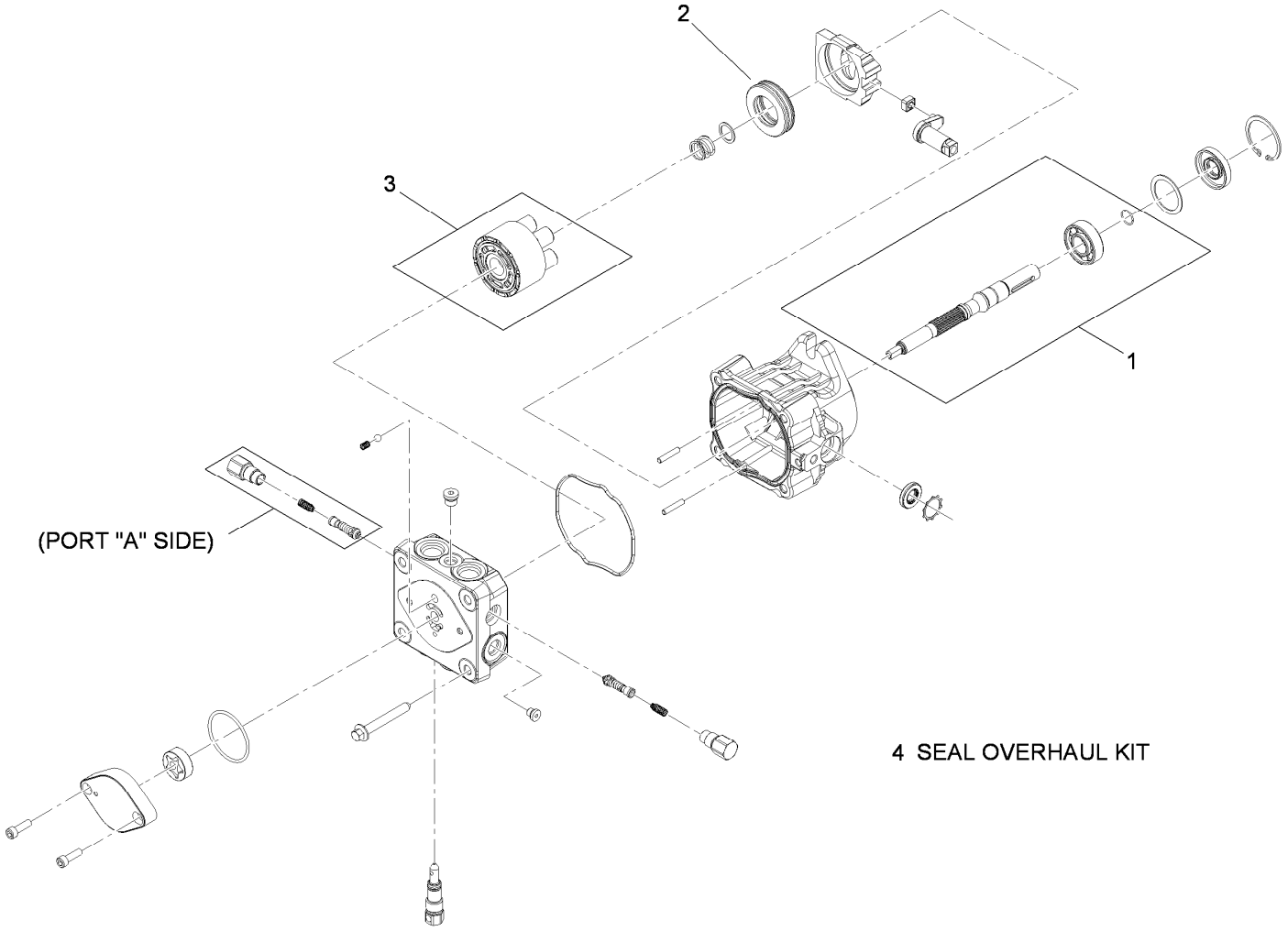

RH Hydraulic Pump Assembly No. 116-0943

Ref.	*Part Number*	*Qty.*	*Description*
1	103-2664	1	Input Shaft Kit
2	94-6922	1	Bearing-Thrust
3	103-2666	1	Cylinder Block Kit
4	105-6184	1	Seal Overhaul Kit

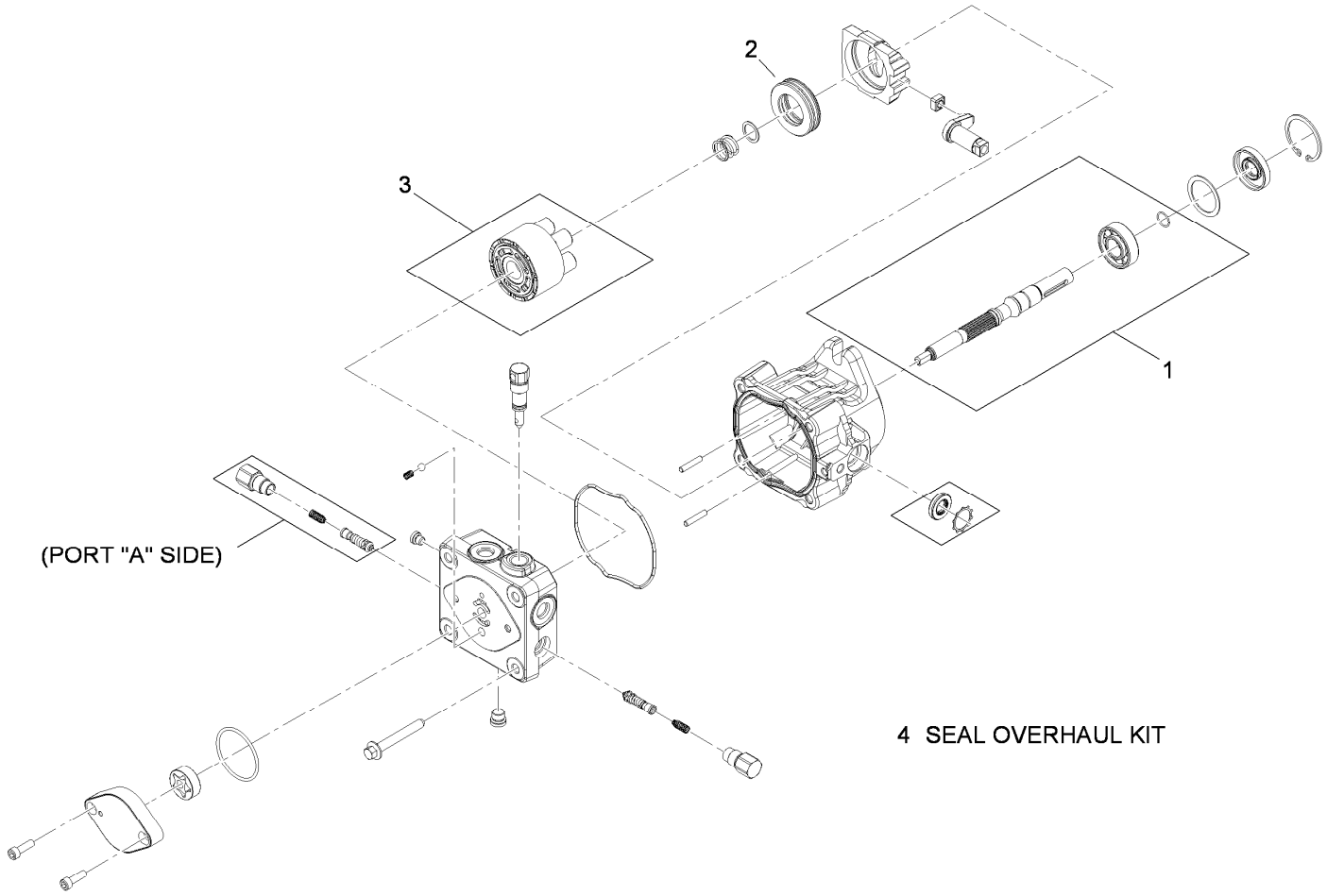

LH Hydraulic Pump Assembly No. 116-0942

Ref.	*Part Number*	*Qty.*	*Description*
1	103-2664	1	Input Shaft Kit
2	94-6922	1	Bearing-Thrust
3	103-2666	1	Cylinder Block Kit
4	105-6184	1	Seal Overhaul Kit

Parking Brake Assembly

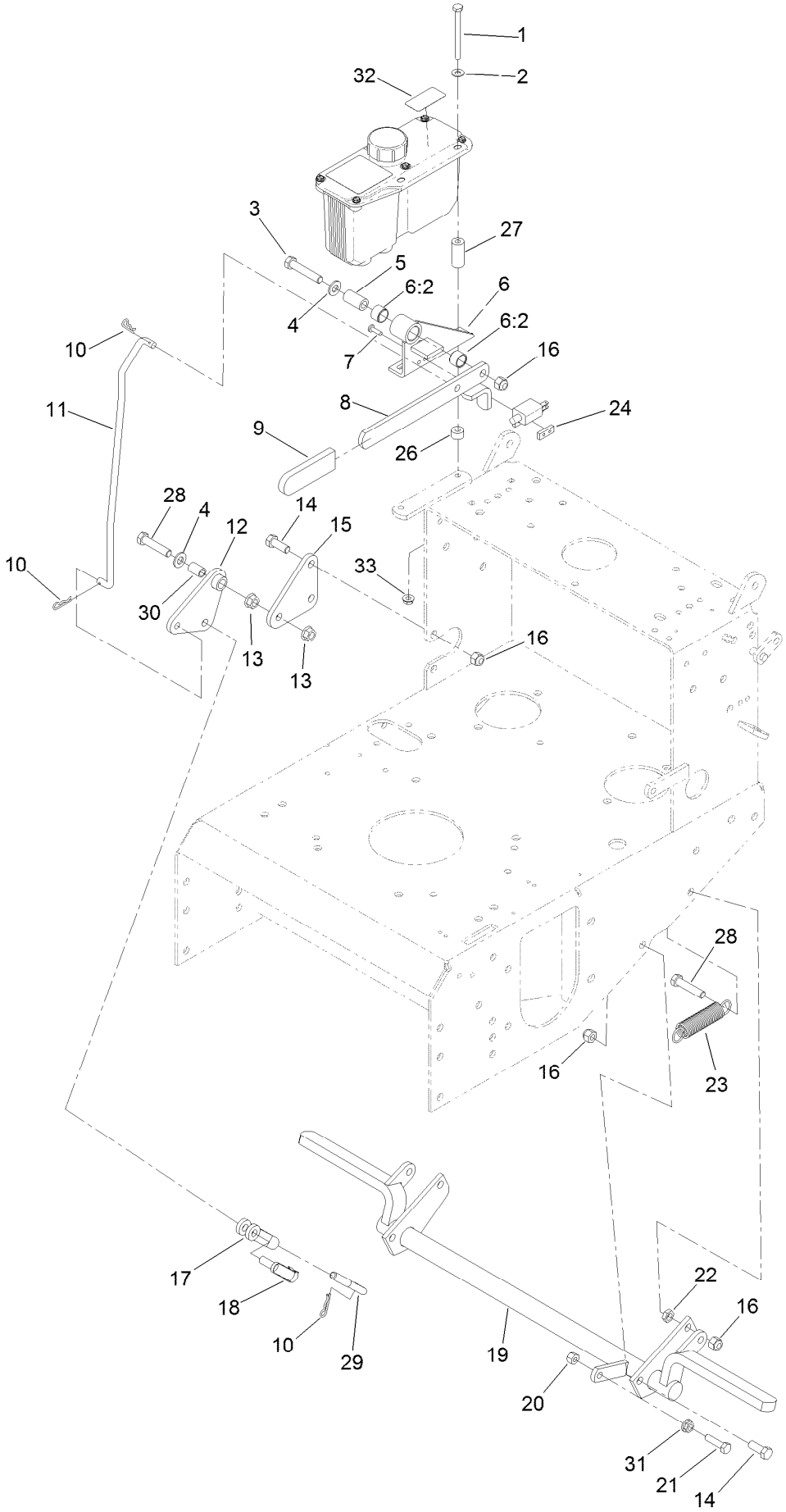

Parking Brake Assembly (continued)

Ref.	Part Number	Qty.	Description
1	321-23	2	Screw-HH
2	3256-22	2	Washer-Flat
3	323-10	1	Screw-HH
4	3256-24	2	Washer-Flat
5	1-413344	1	Bushing-Pivot
6	1-414504	1	Bracket ASM
6:2	1-413347	2	Sleeve-Bushing
7	3290-500	2	Screw-PPH
8	119-6675-03	1	Park Brake Lever
9	1-303020	1	Grip-Lever
10	1-806003	3	Pin-Cotter
11	1-413496	1	Linkage-Upper
12	1-414508	1	Bellcrank ASM
13	32128-21	2	Nut-HF
14	323-6	5	Screw-HH
15	1-413497	1	Bellcrank
16	3296-39	7	Nut-Lock, NI
17	1-633131	1	Yoke-Linkage, Brake
18	103-2399	1	Pin-Spring, Clevis
19	126-1599	1	Shaft-Cross, Brake
20	3296-29	1	Nut-Lock, NI
21	116-3515	1	Screw-HH, Special
22	3218-3	1	Nut-Jam
23	1-323161	1	Spring-Idler
24	1-633181	1	Plate-Tapped
26	1-323549	2	Spacer
27	103-2191	2	Spacer
28	323-9	2	Screw-HH
29	1-413489	1	Linkage-Lower
30	1-303548	1	Bushing-Plastic
31	32128-20	1	Nut-HF
32	115-1039	1	Decal-Brake, Park
33	32128-33	2	Nut-HF

Frame and Linkage Assembly

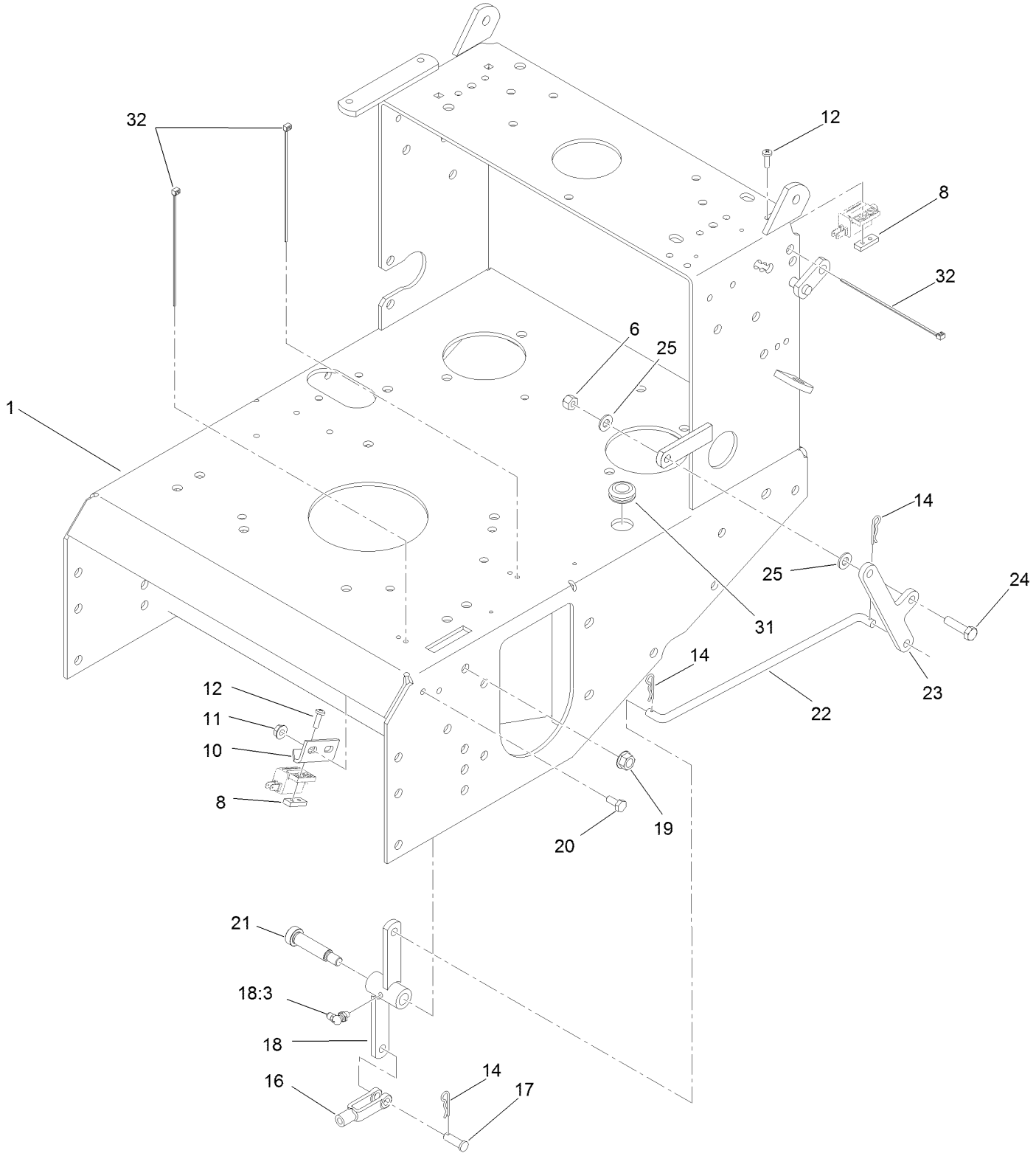

Frame and Linkage Assembly (continued)

Ref.	Part Number	Qty.	Description
1	116-6086-01	1	Frame
6	3296-29	1	Nut-Lock, NI
8	1-633181	2	Plate-Tapped
10	1-323213	1	Bracket-Switch, Blade
11	32128-33	2	Nut-HF
12	3290-500	4	Screw-PPH
14	1-806003	3	Pin-Cotter
16	1-303105	1	Yoke-Adjustable
17	1-808280	1	Pin-Clevis
18	1-322108	1	Bellcrank ASM

Ref.	Part Number	Qty.	Description
18:3	302-40	1	Fitting-Grease, 90 DEG
19	32128-21	1	Nut-HF
20	321-3	2	Screw-HH
21	1-809062	1	Screw
22	1-323172	1	Linkage-Engage, Blade
23	116-1737-01	1	Bellcrank
24	322-6	1	Screw-HH
25	3256-23	2	Washer-Plain
31	1-543296	1	Grommet
32	1-303287	3	Tie-Cable

Hydraulic System Assembly

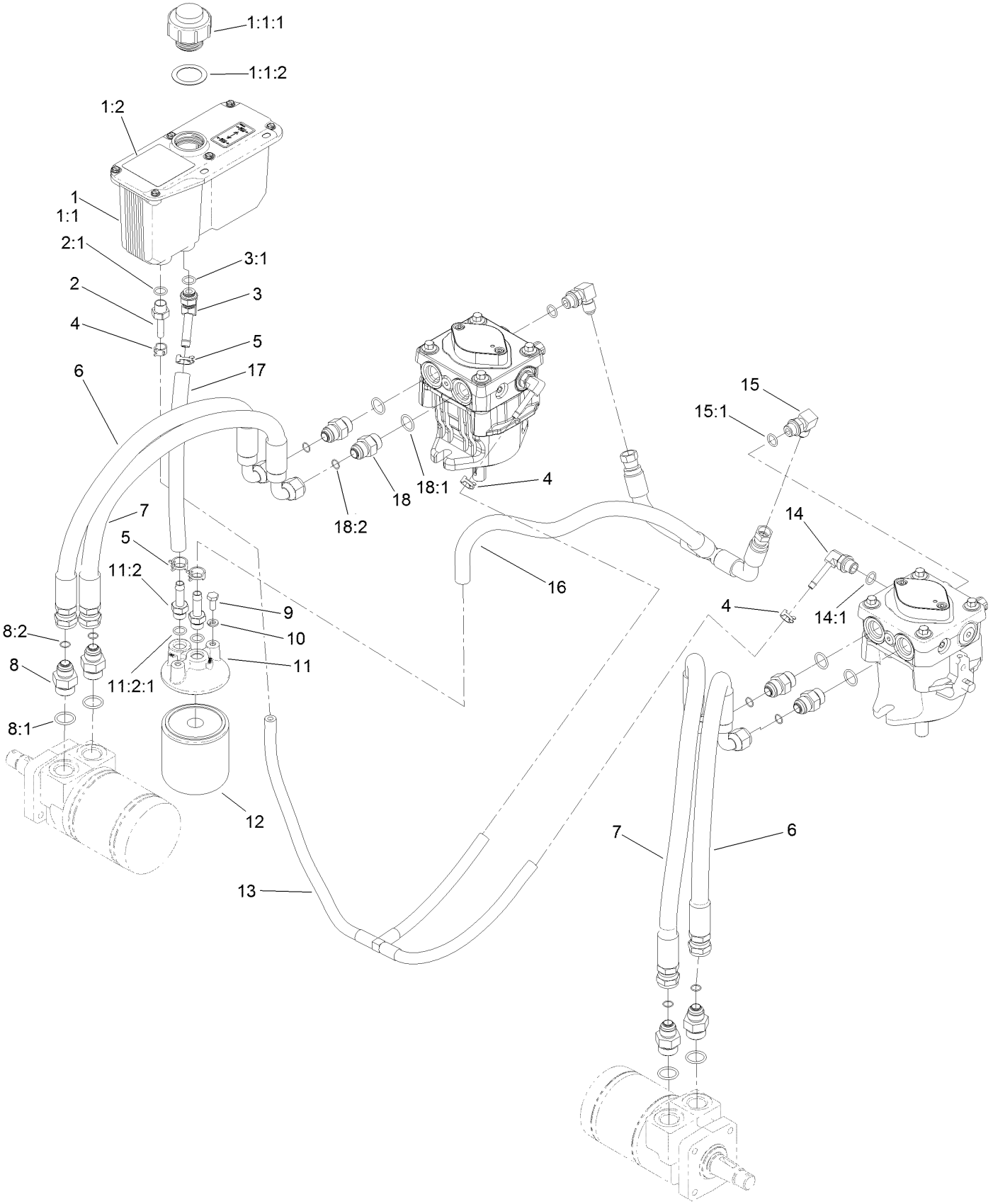

Hydraulic System Assembly (continued)

Ref.	Part Number	Qty.	Description
1	107-8433	1	HYD Reservoir ASM
1:1		1	Reservoir-HYD ●
1:1:1	103-1948	1	Cap-Reservoir, HYD
1:1:2	103-1949	1	Gasket-Cap
1:2	115-4212	1	Decal-Warning
2	103-1801	1	Adapter-Straight
2:1	237-42	1	O-Ring
3	103-1807	1	Fitting-Barbed, 45 DEG
3:1	237-42	1	O-Ring
4	103-1716	3	Clamp-Hose
5	103-1988	3	Clamp-Hose
6	119-7827	2	HYD Hose ASM
7	119-7826	2	HYD Hose ASM
8	1-603991	4	Fitting-Straight
8:1	237-80	1	O-Ring
8:2	1-603992	1	O-Ring

Ref.	Part Number	Qty.	Description
9	321-3	2	Screw-HH
10	1-805004	2	Washer-Lock
11	103-2889	1	Filter Head ASM
11:2	103-1912	2	Adapter-Straight
11:2:1	237-42	1	O-Ring
12	1-633750	1	Filter-Oil, HYD
13	116-0918	1	Case Drain Hose ASM
14	103-1799	2	Elbow-90 DEG
14:1	237-42	1	O-Ring
15	103-1802	2	Fitting-Elbow, 90 DEG
15:1	237-42	1	O-Ring
16	116-2123	1	Charge Hose ASM
17	103-2959	1	Hose-Charge
18	1-603990	4	Fitting-Straight
18:1	1-603920	1	O-Ring
18:2	1-603992	1	O-Ring

● Not serviced separately

Lower Control Assembly

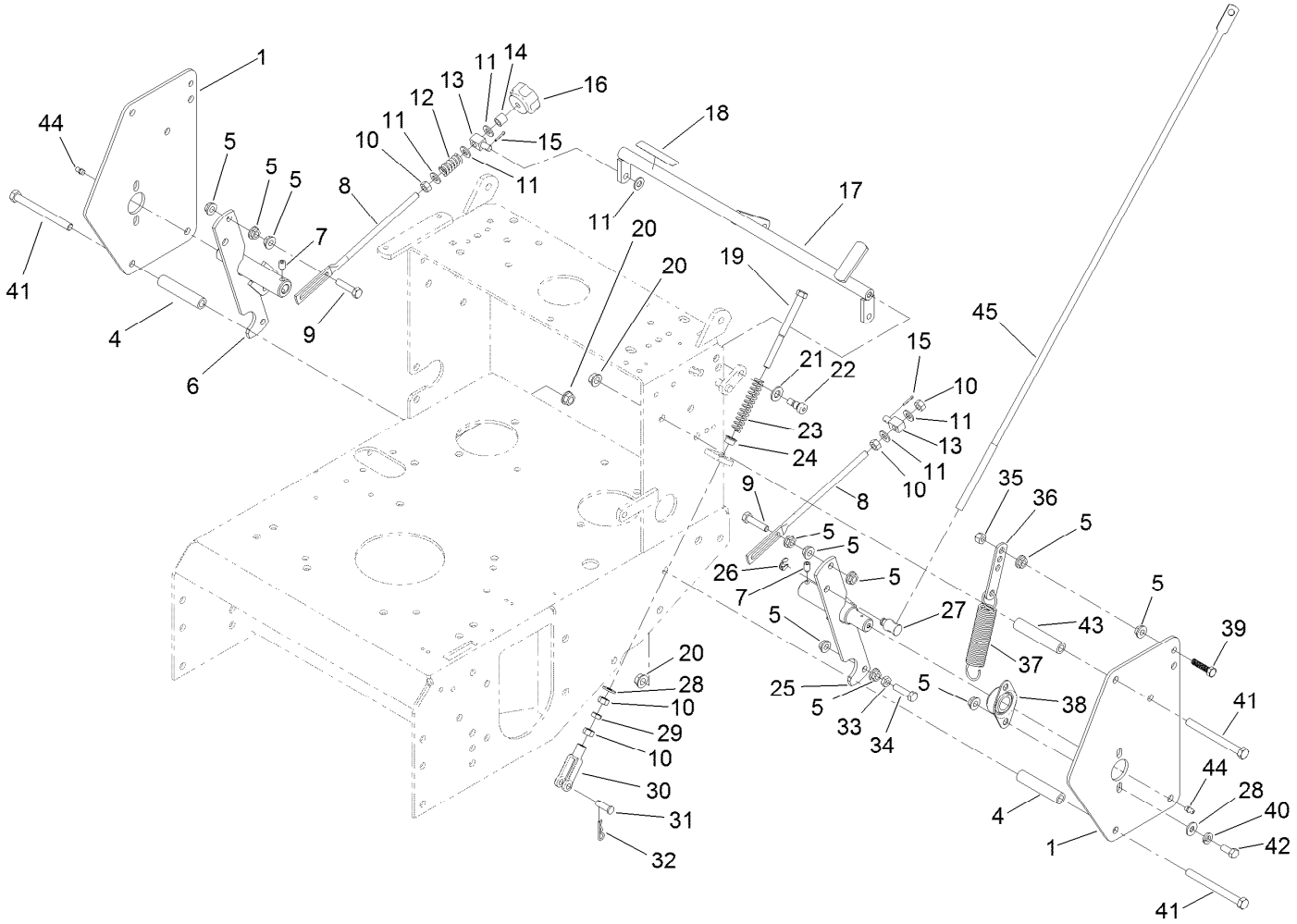

Lower Control Assembly (continued)

Ref.	Part Number	Qty.	Description
1	110-4897-01	2	Shield-Control
4	1-323197-01	4	Spacer-Shield
5	32128-20	18	Nut-HF
6	103-4796-01	1	Shaft-Control, RH
7	3246-4	2	Screw-Set
8	1-413350	2	Link-Control, Speed
9	1-403180	2	Screw-HH
10	3219-2	7	Nut-Hex
11	3256-23	7	Washer-Plain
12	1-323245	1	Spring-Compression
13	1-603676	2	Swivel-Adjustable, Short
14	1-603903	1	Spacer
15	3272-5	2	Pin-Cotter
16	103-3060	1	Knob-Tracking
17	1-412203-01	1	Crank-Control, Speed
18	130-8375	1	Decal-Tracking
19	1-603737	2	Bolt-Return, Neutral
20	3290-357	8	Nut-HHF, Whiz
21	3256-24	2	Washer-Flat
22	1-809056	2	Screw-HSH
23	1-603807	2	Spring-Return, Neutral
24	1-603735	2	Bushing-Flanged
25	103-1190-01	1	Shaft-Control, LH
26	32151-47	2	Ring-Retaining
27	103-1235	2	Swivel-Lever, Drive
28	3256-2	6	Washer-Flat
29	3220-2	2	Nut-Jam
30	1-303105	2	Yoke-Adjustable
31	1-808280	2	Pin-Clevis
32	1-806003	2	Pin-Cotter
33	3218-2	2	Nut-Jam
34	116-3515	2	Screw-HH, Special
35	3296-29	2	Nut-Lock, NI
36	1-613089	2	Tab-Spring, Extension
37	1-603693	2	Spring-Extension
38	1-633102	2	Bearing-Flange, Side
39	1-800016	2	Bolt-TAP, HH
40	1-805005	4	Washer-Lock
41	323-16	8	Screw-HH
42	322-3	4	Screw-HH
43	1-323195-01	4	Spacer-Shield
44	302-19	2	Fitting-Grease
45	1-413219	2	Rod-Lever, Drive

Control Handle Assembly

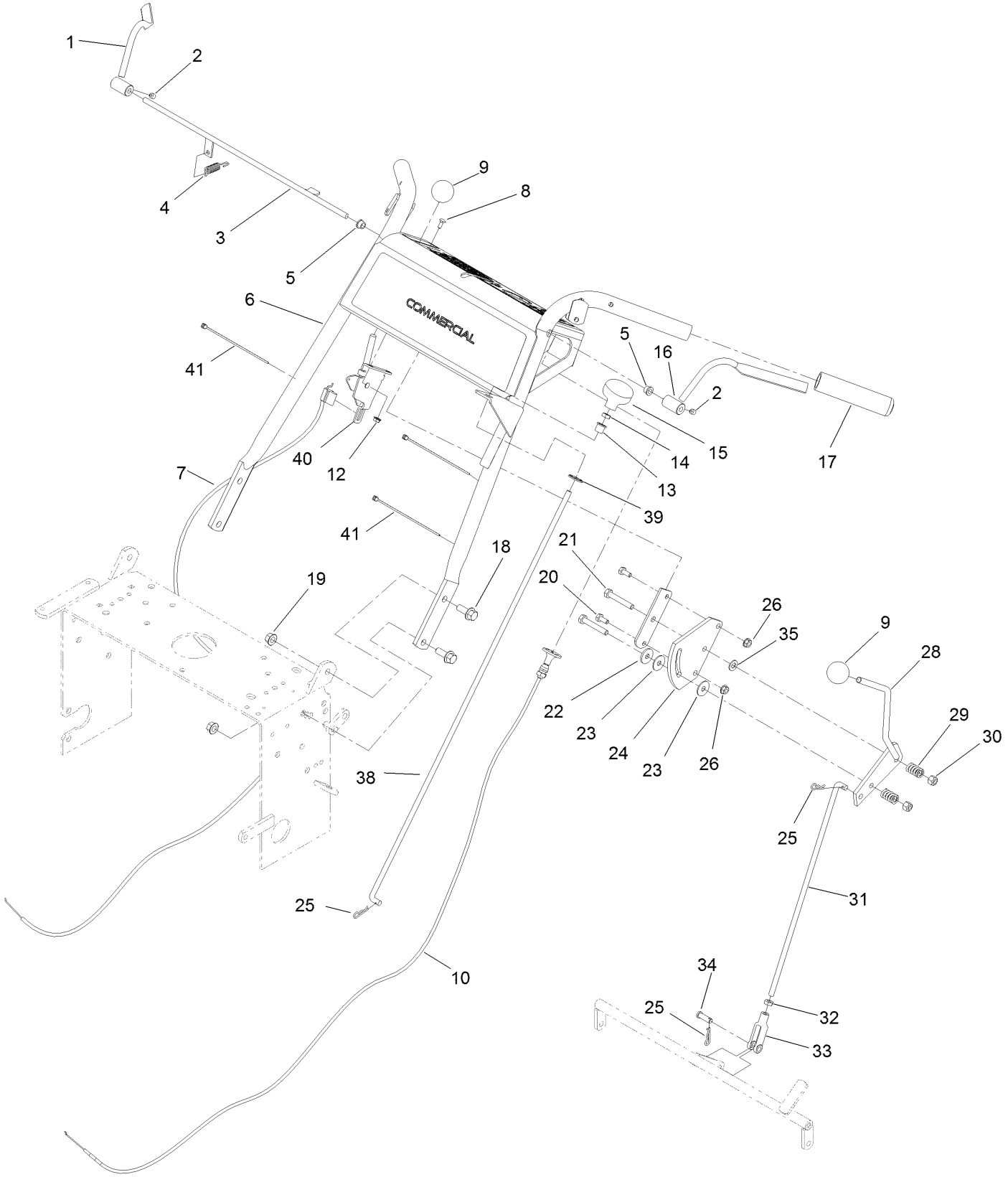

Control Handle Assembly (continued)

Ref.	Part Number	Qty.	Description
1	106-5486	1	RH Operator Presence Control Lever ASM
2	1-803322	2	Screw-Set
3	106-2717-03	1	Rod-Control, Operator Presence
4	1-303363	1	Spring-Extension
5	1-303365	2	Bushing-Nylon
6	119-6671	1	Handle ASM
7	119-6680	1	Cable-Control
8	1-807513	2	Bolt-CARR
9	1-603175	2	Knob-Ball
10	119-6679	1	Control, Choke
12	32128-17	2	Nut-Lock, Flange
13	1-323143	1	Bearing-Nylon
14	3218-2	1	Nut-Jam
15	1-323134	1	Knob-Push / Pull
16	106-5485	1	LH Operator Presence Control Lever ASM
17	104-9838	2	Grip-Foam
18	3234-11	4	Screw-HHF
19	32128-21	4	Nut-HF
20	321-3	2	Screw-HH
21	322-10	2	Screw-HH
22	1-603716	1	Washer-Friction
23	1-323244	2	Washer-Friction
24	1-603730	1	Plate-Lever, Shifter
25	1-806003	3	Pin-Cotter
26	32128-33	2	Nut-HF
28	106-2748	1	Lever-Shift
29	1-323245	2	Spring-Compression
30	3296-29	2	Nut-Lock, NI
31	1-323522	1	Rod-Control, Speed
32	3220-2	1	Nut-Jam
33	1-303105	1	Yoke-Adjustable
34	1-808280	1	Pin-Clevis
35	3256-23	1	Washer-Plain
38	1-323181	1	Linkage-Blade
39	1-323142	1	Nut-Push
40	110-5547	1	Lever-Control
41	1-303287	3	Tie-Cable

Control Panel Decal Assembly

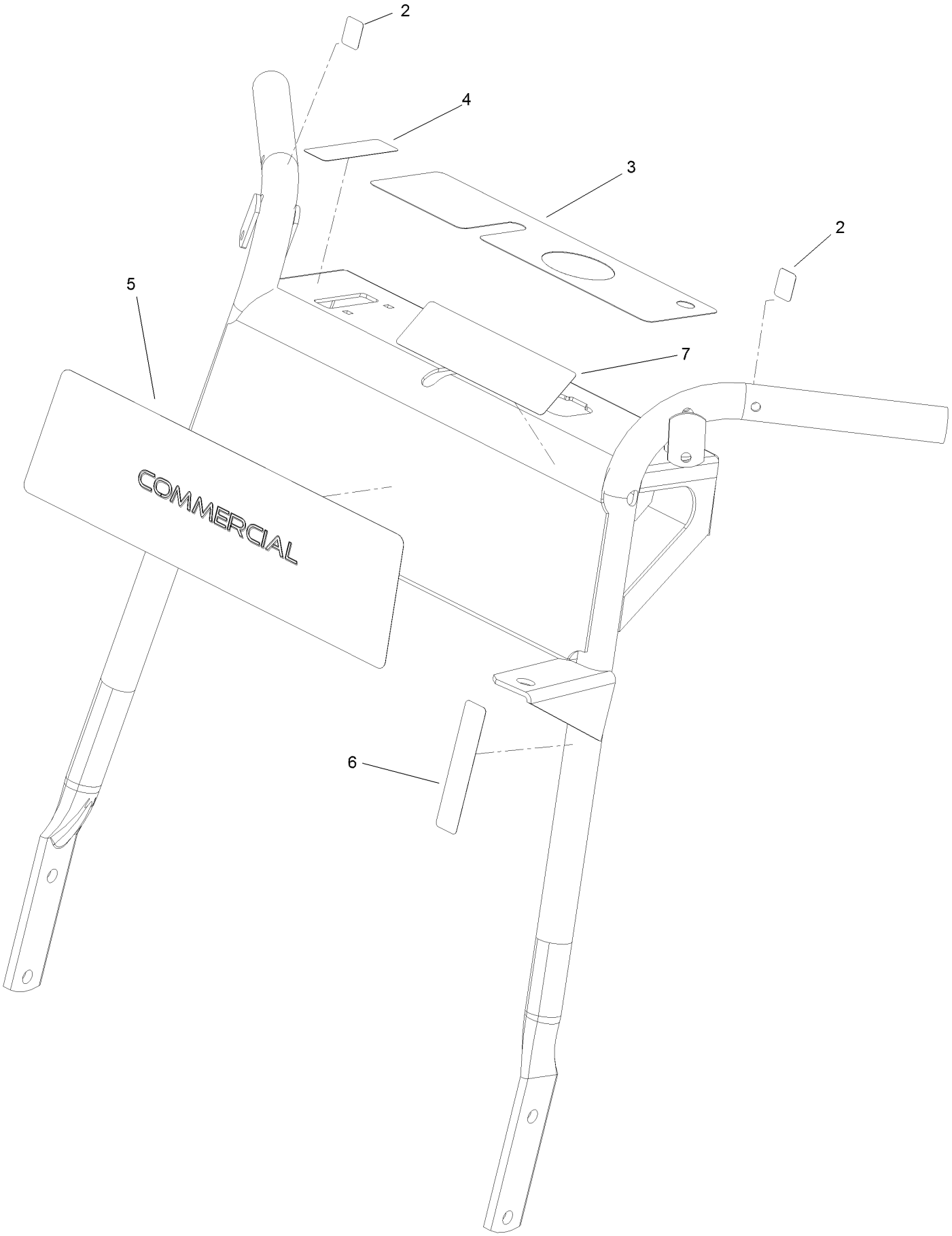

Control Panel Decal Assembly (continued)

Ref.	Part Number	Qty.	Description
2	130-8370	2	Decal-Lock,Neutral
3	119-6672	1	Decal-Control Panel
4	106-2733	1	Decal-Throttle
5	110-6917	1	Decal
6	95-5537	1	Decal-Engage, Deck
7	95-5852	1	Decal - Slope, Int'l

Upper Handle Assembly

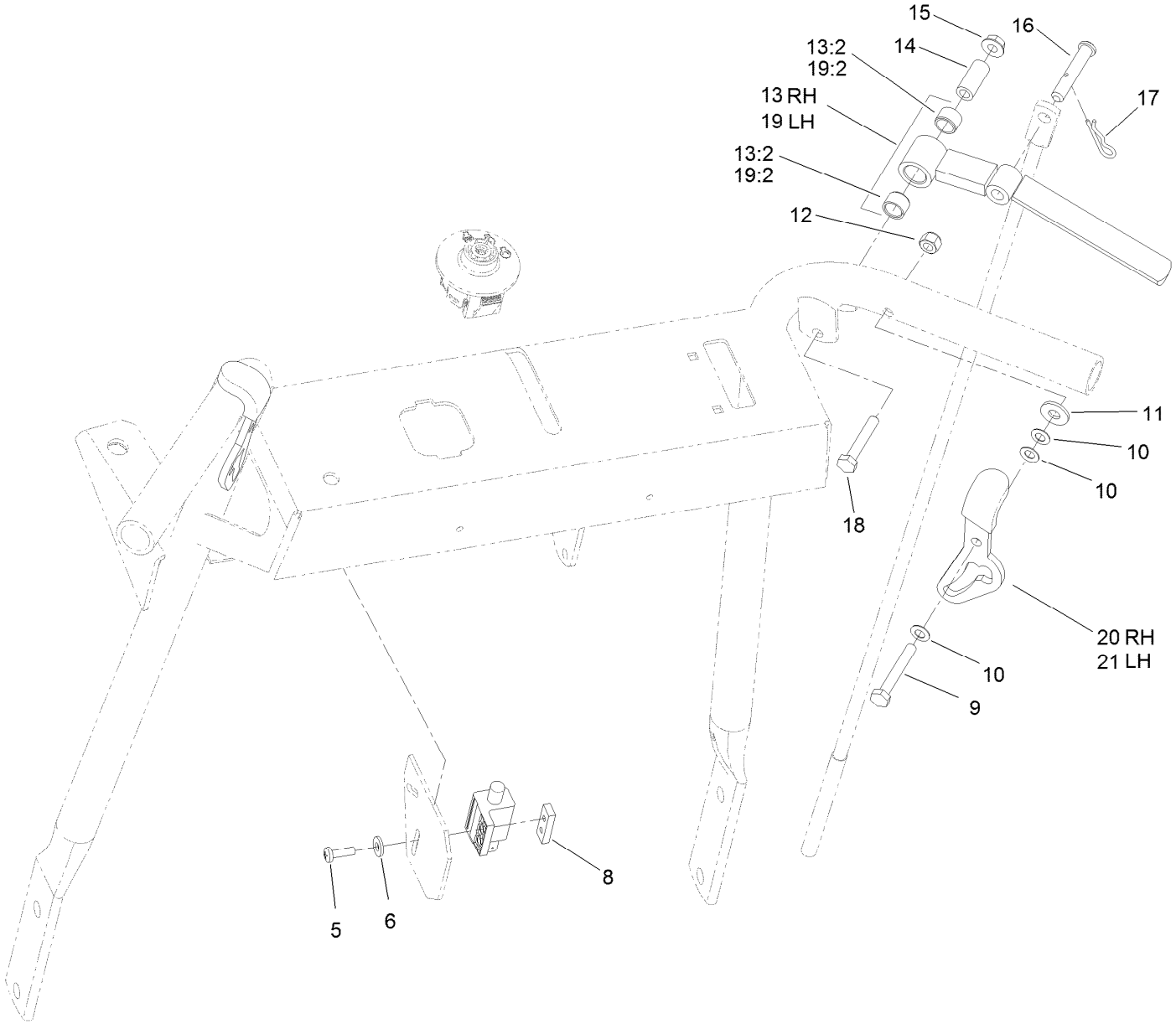

Upper Handle Assembly (continued)

Ref.	Part Number	Qty.	Description
5	3290-500	2	Screw-PPH
6	3256-14	1	Washer-Flat
8	1-633181	1	Plate-Tapped
9	321-10	2	Screw-HH
10	1-303435	6	Washer-Spring
11	3256-2	2	Washer-Flat
12	3296-42	2	Nut-Lock, NI
13	103-0219	1	RH Drive Lever ASM
13:2	1-413152	2	Bushing-Sleeve

Ref.	Part Number	Qty.	Description
14	1-603749	2	Bushing-Lever, Drive
15	32128-33	2	Nut-HF
16	1-613055	2	Pin-Clevis
17	1-806003	2	Pin-Cotter
18	321-9	2	Screw-HH
19	103-0218	1	LH Drive Lever ASM
19:2	1-413152	2	Bushing-Sleeve
20	137-9514	1	Latch-RH Thumb,W/Grip
21	137-9515	1	Latch-LH Thumb,W/Grip

Harness and Battery Assembly

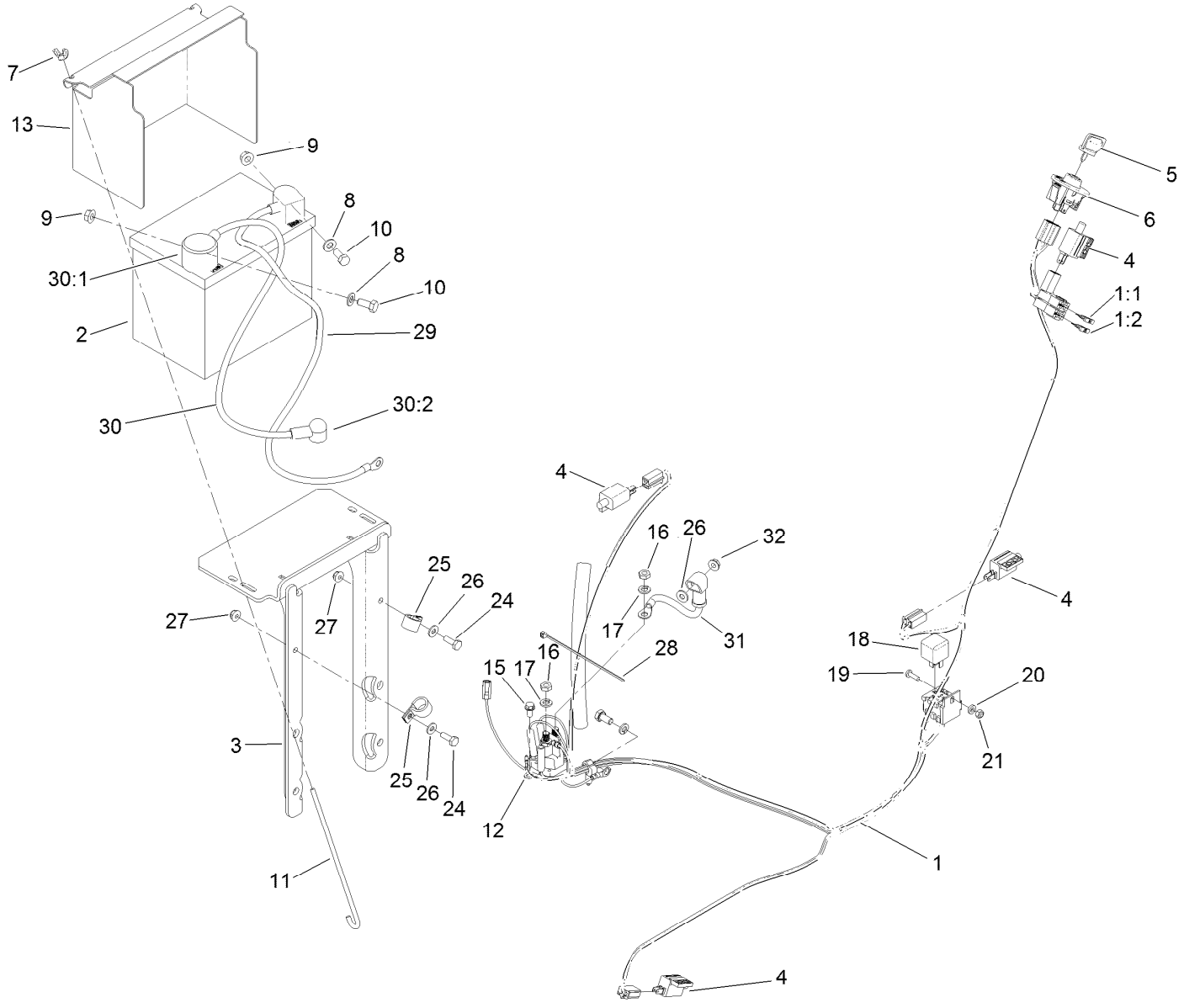

Harness and Battery Assembly (continued)

Ref.	Part Number	Qty.	Description
1	119-6667	1	Harness-Wire
1:1	109103	1	Fuse-Blade, 30 Amp
1:2	109102	1	Fuse-Blade, 25 Amp
2	104-8162	1	Battery-Dry
3	119-6666-03	1	Tray-Battery
4	1-513051	4	Switch-Open, Normally
5	63-8360	1	Key-Ignition
6	137-4100	1	Switch-Ignition
7	1-543792	2	Wingnut
8	3256-23	2	Washer-Plain
9	109-5715	2	Nut-HHF, Smooth
10	322-3	2	Screw-HH
11	1-633651	2	Bolt-Holddown
12	117-1197	1	Solenoid
13	117-0543-01	1	Cover-Battery
15	32144-4	2	Screw-HWH
16	3220-2	2	Nut-Jam
17	3253-4	2	Washer-Lock
18	98-7249	1	Relay
19	3290-500	1	Screw-PPH
20	99-3058	1	Washer
21	3296-2	1	Nut-Lock, NI
24	321-4	2	Screw-HH
25	2412-87	2	Clamp-Cable
26	3256-22	2	Washer-Flat
27	104-7201	2	Nut-HF
28	1-303287	1	Tie-Cable
29	117-6422	1	Cable-Battery, Black
30	109-7653	1	Positive Battery Cable ASM
30:1	109-2407	1	Insulator-Battery
30:2	1-543393	1	Insulator-Solenoid
31	106-8268	1	Cable-Battery, Red
32	32128-33	1	Nut-HF

Attachments and Accessories

For 31914 Commercial Walk-Behind Traction Unit 18HP Pistol-Grip Hydro Drive

Product Name	Model/Part
All Season Synthetic Oil	117-0066
Toro 4-cycle SAE 30 Oil (32oz Bottle)	38903
48in (122cm) Mid-Size Rear-Discharge Deck	02712
36in (92cm) Mid-Size Rear-Discharge Deck	02711
Cleated Tire Kit	02930
Dual Wheel Kit	02931
Weight Kit	110-2085
Sulky	30109
Narrow Wheel Kit	02932
32in (82cm) Mid-Size Rear-Discharge Deck	02710
36in (92cm) Mid-Size Flail Attachment	02720
Spark Plug	92-2153
Oil Filter	119-5852
Filter-fuel	120-2235
Element-Filter, Air	120-7447
Turfmaster Wheel Kit	02929

Notes:

Notes:

Notes:

TORO®

Count on it.