Form No. 3420-312 Rev A

TORO®

Count on it.

Parts Catalog

Workman® GTX

Electric Utility Vehicle with Bench Seat

Model No. 07153—Serial No. 400000000 and Up

Register at www.Toro.com.
Original Instructions (EN)

3420-312 A

Ordering Replacement Parts

To order replacement parts, please supply the part number, the quantity, and the description of each part desired.

Understanding Reference Numbers

Each identified part in an illustration has a reference number. The reference number for a part also appears in the parts list, along with other information about the part.

This catalog uses two special reference number formats, one to indicate parts in a service assembly and another to indicate the quantity of a given part in an illustration.

Service Assembly Reference Numbers

Parts in service assemblies have reference numbers in the form a:b. The a represents the reference number of the entire service assembly and the b represents a sequential number unique to each part within the service assembly.

For example, a wheel assembly might be identified by reference number 6, the tire by 6:1, the valve by 6:2, and the wheel by 6:3. When you order the assembly identified by reference number 6, you receive all parts identified by reference numbers 6:1,6:2, and 6:3. However, you may also order any part individually. Reference numbers of this type appear in illustration and in parts lists.

Reference Numbers Indicating Quantity

In an illustration, if a reference number indicates more than one part, the reference number has the form nX y. The n represents the quantity of the part, the X is the multiplication symbol, and the y represents the reference number.

For example, in an illustration, the reference number 2X 37 means that two of the parts identified by reference number 37 are indicated.

Contents

Front Frame and Suspension Assembly 4
Floor Plate and Rear Suspension Mount Assembly 5
Rear Frame and Suspension Assembly 6
Frame Mount and Rear Shock/Spring Assembly 7
Brake Assembly 8
Master Cylinder Assembly No. 104-6782 9
Brake Caliper Assembly No. 127-7424 10
Steering Assembly 11
Pedal and Control Assembly 12
Hood and Fender Assembly 13
Dash Assembly 14
Seatbase Assembly 15
Cargo Bed Assembly 16
Cargo Bed and Tailgate Assembly No. 131-8592 17
Battery Assembly 18
Rear Axle and Motor Assembly 19
Transaxle Assembly No. 136-6340 20
Electric Motor Assembly No. 131-8485 21
Controller Assembly 22
Sevcon Controller Assembly No. 127-2767 24
Onboard Charger Assembly No. 131-8490 25
Accelerator Pedal and Key Switch Assembly 26
Attachments and Accessories 27

© 2017—The Toro® Company
8111 Lyndale Avenue South
Bloomington, MN 55420

Contact us at www.Toro.com.
Printed in the USA.
All Rights Reserved

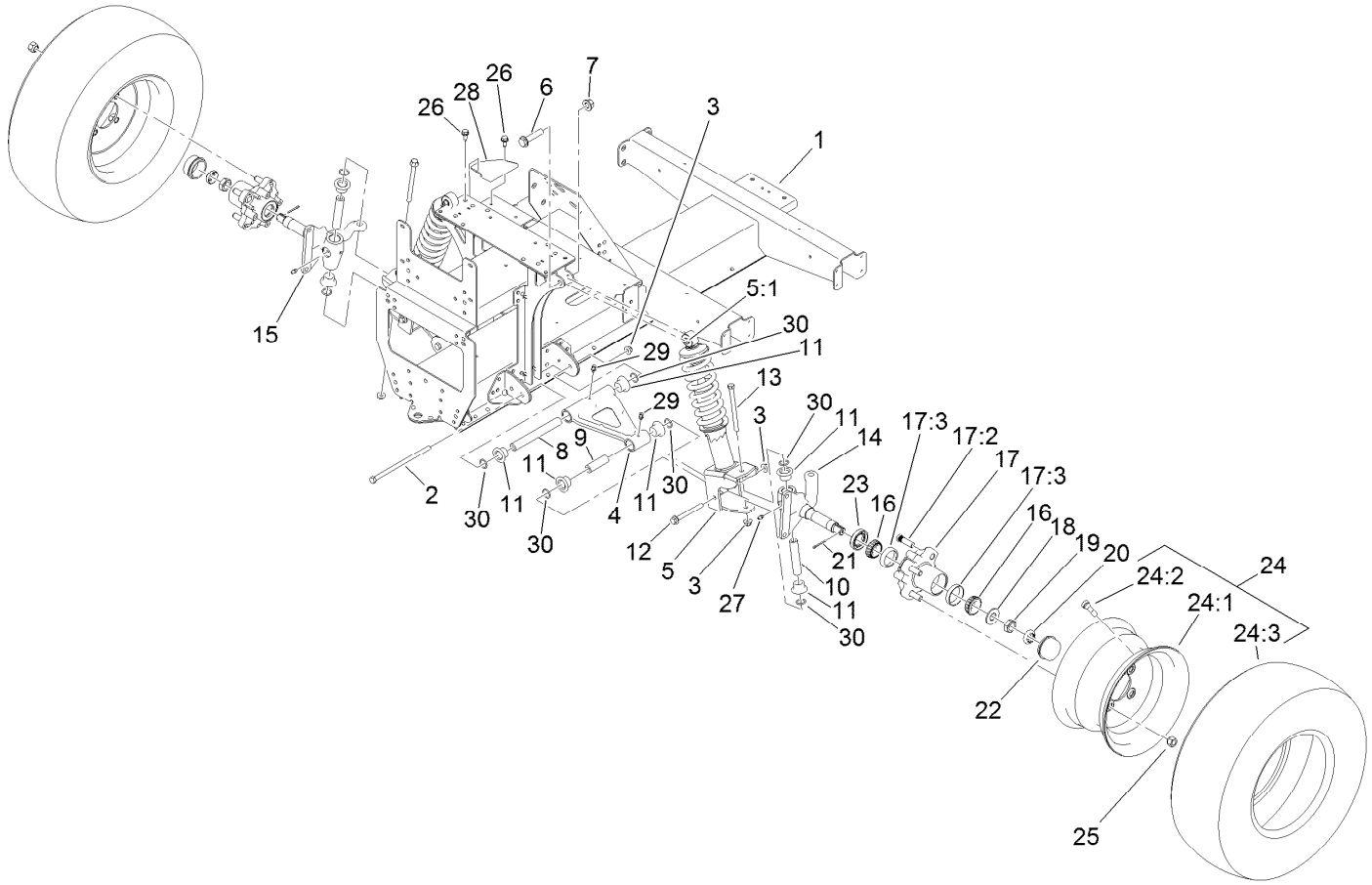

Front Frame and Suspension Assembly

Ref.	Part Number	Qty.	Description
1	127-7718-03	1	Frame-Front
2	131-8572	2	Screw-HF
3	104-8301	6	Nut-HF, NI
4	131-8345	2	A-Arm
5	127-8776	2	Strut ASM
5:1	131-8574	1	Isolator-Shock
6	3234-46	2	Screw-HHF
7	99-5107	2	Nut-Lock
8	131-8581	2	Sleeve-Control Arm, Inner
9	131-8583	2	Sleeve-Control Arm, Outer
10	131-8582	2	Sleeve-Kingpin
11	133-0643	12	Bushing-Flange, O-Ring
12	116-4701	2	Screw-HHF
13	131-8571	2	Screw-HF
14	127-8825-03	1	Spindle-LH
15	127-8826-03	1	Spindle-RH
16	254-94	4	Bearing-Cone, Tapered
17	127-8851	2	Front Hub ASM

Ref.	Part Number	Qty.	Description
17:2	10-6830	4	Stud-Type, Drive
17:3	254-72	2	Bearing-Cup, Tapered
18	93-0309	2	Washer-Tab
19	3220-7	2	Nut-Jam
20	93-0307	2	Nut-Lock, Retainer
21	3272-12	2	Pin-Cotter
22	241-119	2	Cap-Dust
23	112-1690	2	Seal-Oil
24	131-8319	2	Tire/Wheel ASM
24:1	131-8317	1	Wheel
24:2	232-27	1	Stem-Valve
24:3	131-8318	1	Tire
25	242-50	8	Nut-Lug
26	32144-70	2	Screw-HWHTF
27	302-5	2	Fitting-Grease
28	131-8339-03	1	Reinforcement-Tower
29	302-40	4	Fitting-Grease, 90 DEG
30	237-54	12	O-Ring

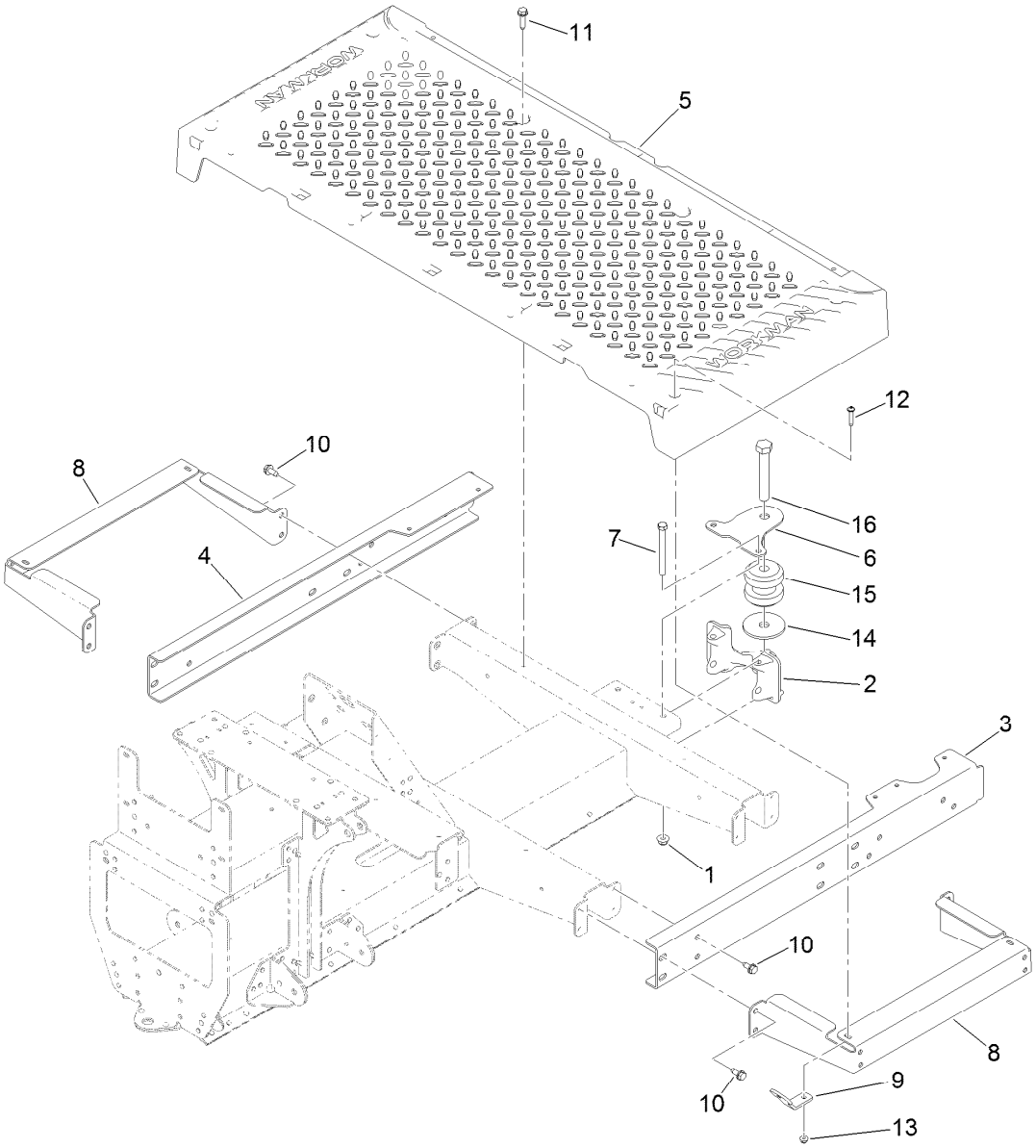

Floor Plate and Rear Suspension Mount Assembly

Ref.	Part Number	Qty.	Description
1	104-8301	2	Nut-HF, NI
2	131-8466	1	Mount-Suspension, Rear
3	127-7820-03	1	Channel-Frame, Front (LH)
4	127-7821-03	1	Channel-Frame, Front (RH)
5	127-7829	1	Plate-Floor
6	131-8597	1	Plate-Gimbal, Upper
7	323-42	2	Screw-HH
8	127-7837-03	2	Bracket-Support, Floor Plate

Ref.	Part Number	Qty.	Description
9	127-7832	2	Bracket-Angle
10	32144-70	16	Screw-HWHTF
11	32144-49	4	Screw-HWHTF
12	132-6777	4	Screw-TTH
13	104-7201	4	Nut-HF
14	110-4549	1	Washer-Snubbing
15	131-8480	1	Isolator
16	104-5877	1	Screw-HH

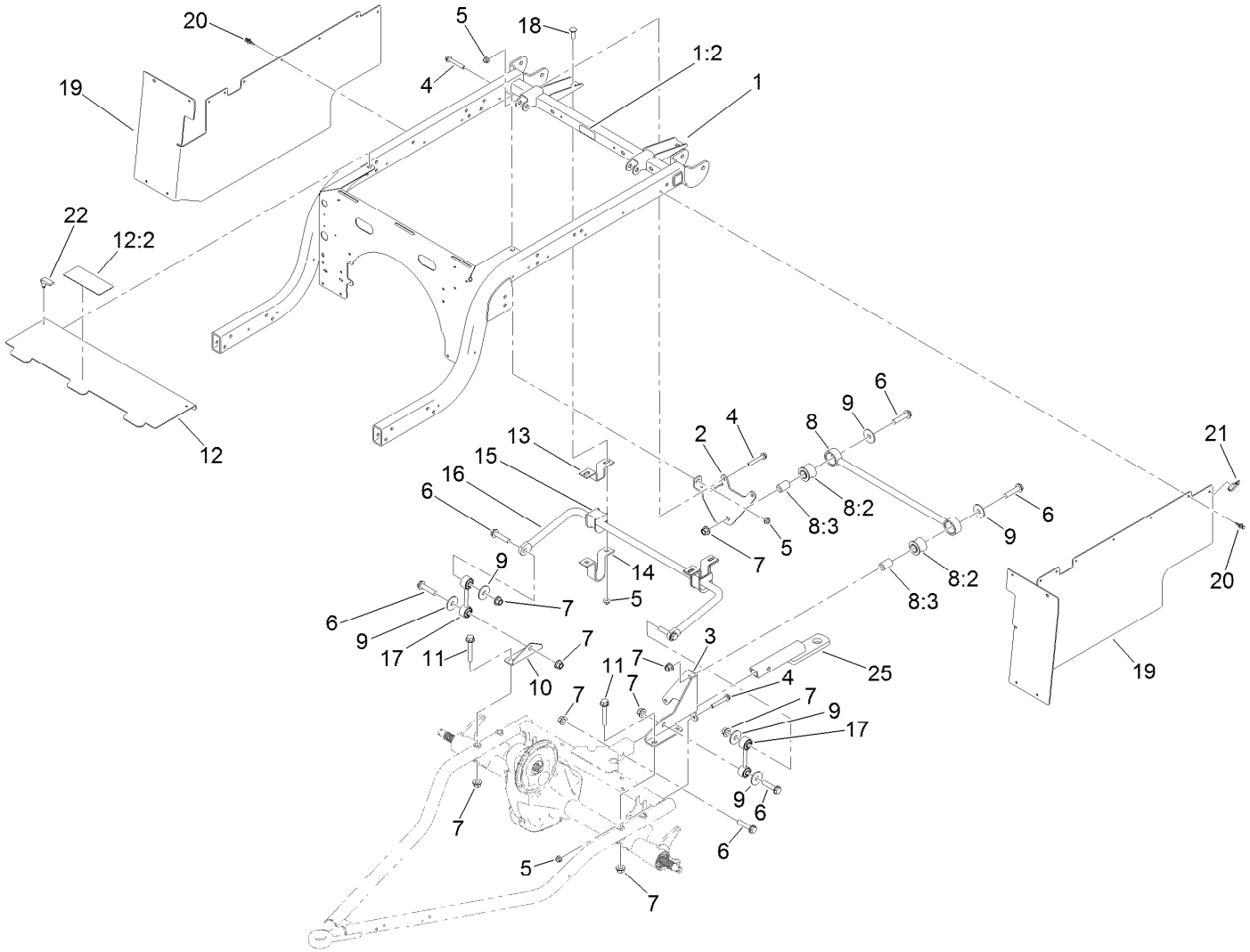

Rear Frame and Suspension Assembly

Ref.	Part Number	Qty.	Description
1	131-8594	1	Rear Frame ASM
1:2	115-2047	1	Decal-Surface, Hot
2	127-7412-03	1	Bracket-Bar, Stabilizer
3	127-7411-03	1	Bracket-Bar, Stabilizer
4	3234-39	5	Screw-HHF
5	104-8301	9	Nut-HF, NI
6	3234-46	7	Screw-HHF
7	99-5107	11	Nut-Lock
8	109-5013	1	Panhard Rod ASM
8:2	109-5009	2	Bushing-Suspension, Rubber
8:3	109-5010	2	Spacer
9	86-1990	6	Washer-Thrust
10	131-8315	1	Bracket-Link, Sway Bar

Ref.	Part Number	Qty.	Description
11	3234-40	4	Screw-HF
12	131-8595	1	Panel-Cover
12:2	99-7345	1	Decal-Warning
13	87-3890-03	2	Bracket-Bar, Sway
14	87-4010-03	2	Clamp-Bar, Sway
15	87-3910	2	Bushing-Rubber
16	131-8310-03	1	Bar-Sway, Anti
17	131-8394	2	Link-Bar, Sway
18	3231-25	4	Bolt-CARR
19	131-8346	2	Panel-Side
20	125-9622	20	Rivet-Blind
21	3290-378	2	Tie-Cable
22	74-5950	2	Latch-Swell
25	132-8590-03	1	Bar-Draw, Class 1

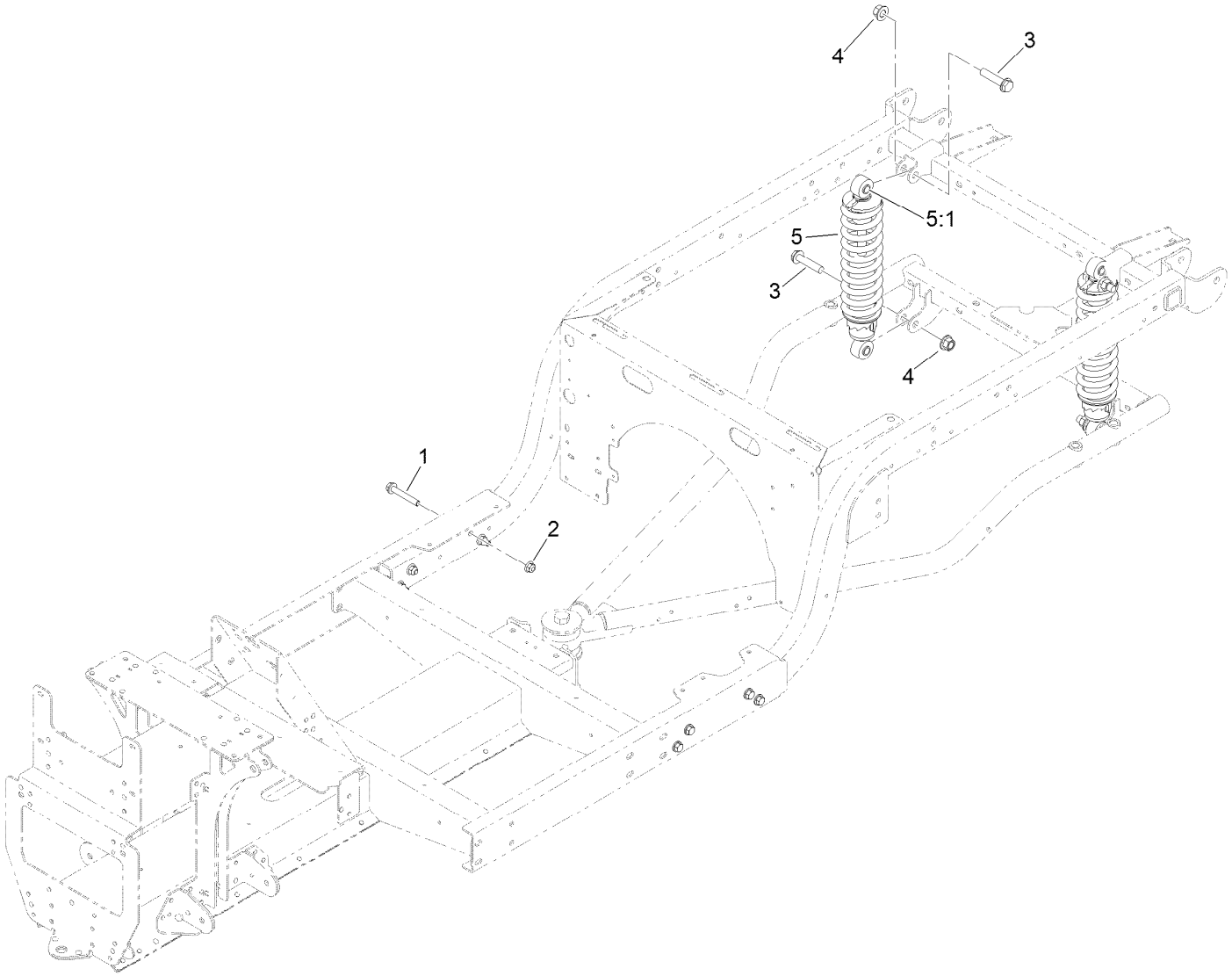

Frame Mount and Rear Shock/Spring Assembly

Ref.	*Part Number*	*Qty.*	*Description*
1	3234-39	8	Screw-HHF
2	104-8301	8	Nut-HF, NI
3	3234-46	4	Screw-HHF
4	99-5107	4	Nut-Lock
5	131-3455	2	Shock/Spring ASM
5:1	131-8574	2	Isolator-Shock

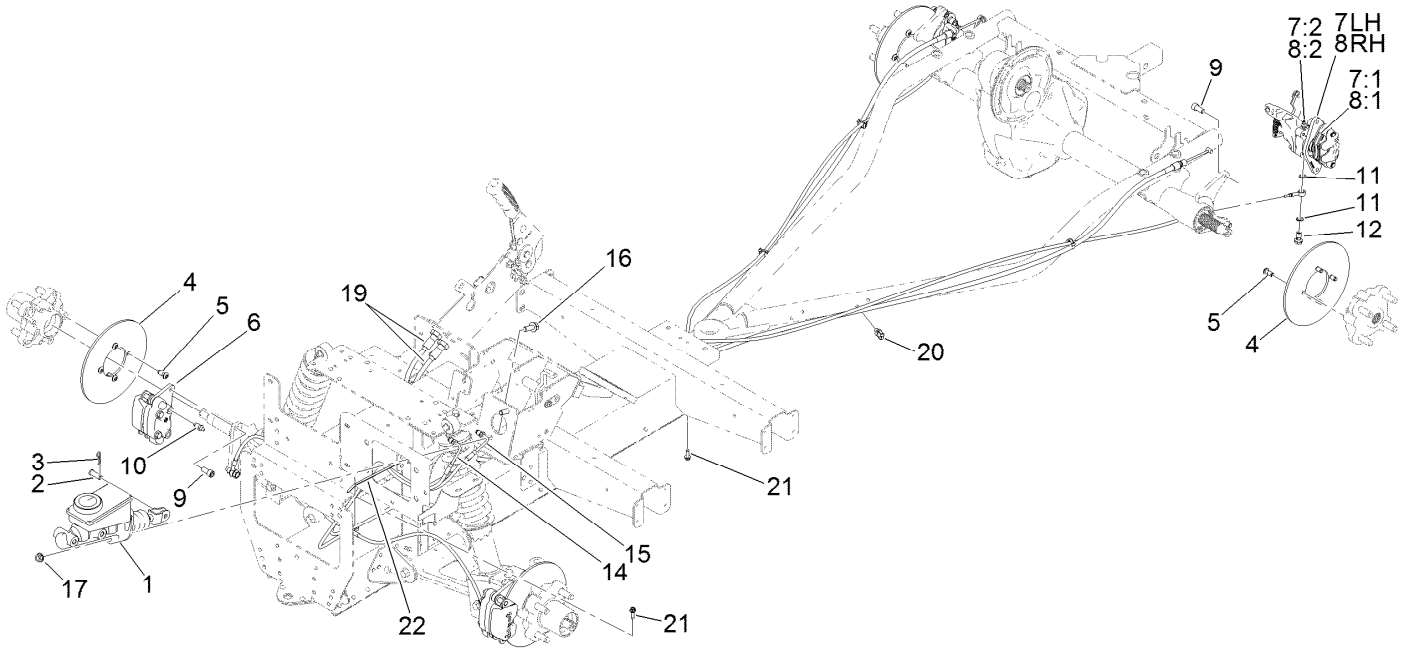

Brake Assembly

Ref.	Part Number	Qty.	Description
1	104-6782	1	Master Cylinder ASM
2	283-2	1	Pin-Clevis
3	1-806003	1	Pin-Cotter
4	136-6295	4	Rotor-Brake
5	121-9671	16	Screw-HSBH
6	127-7424	2	Brake Caliper ASM
7	131-8313	1	Caliper-Rear, LH
7:1	131-8518	1	Pad Kit (Set Of 4)
7:2	119-9509	1	Screw-Bleed
7:3	136-6328	2	Spring-Rattle, Anti ●
8	131-8314	1	Caliper-Rear, RH
8:1	131-8518	1	Pad Kit (Set Of 4)
8:2	119-9509	1	Screw-Bleed

Ref.	Part Number	Qty.	Description
8:3	136-6328	2	Spring-Rattle, Anti ●
9	131-8573	8	Screw-HSH
10	119-9509	2	Screw-Bleed
11	115-2341	8	Washer-Banjo
12	120-4875	4	Bolt-Flange, Banjo
14	127-7781	1	Brake Line-Front
15	127-7782	1	Brake Line-Rear
16	3234-11	2	Screw-HHF
17	3290-357	2	Nut-HHF, Whiz
19	131-8406	2	Cable-Park Brake
20	32180-030	4	Clip-Tie
21	49-2040	2	Screw-HWHTF
22	3290-378	1	Tie-Cable

● Not illustrated

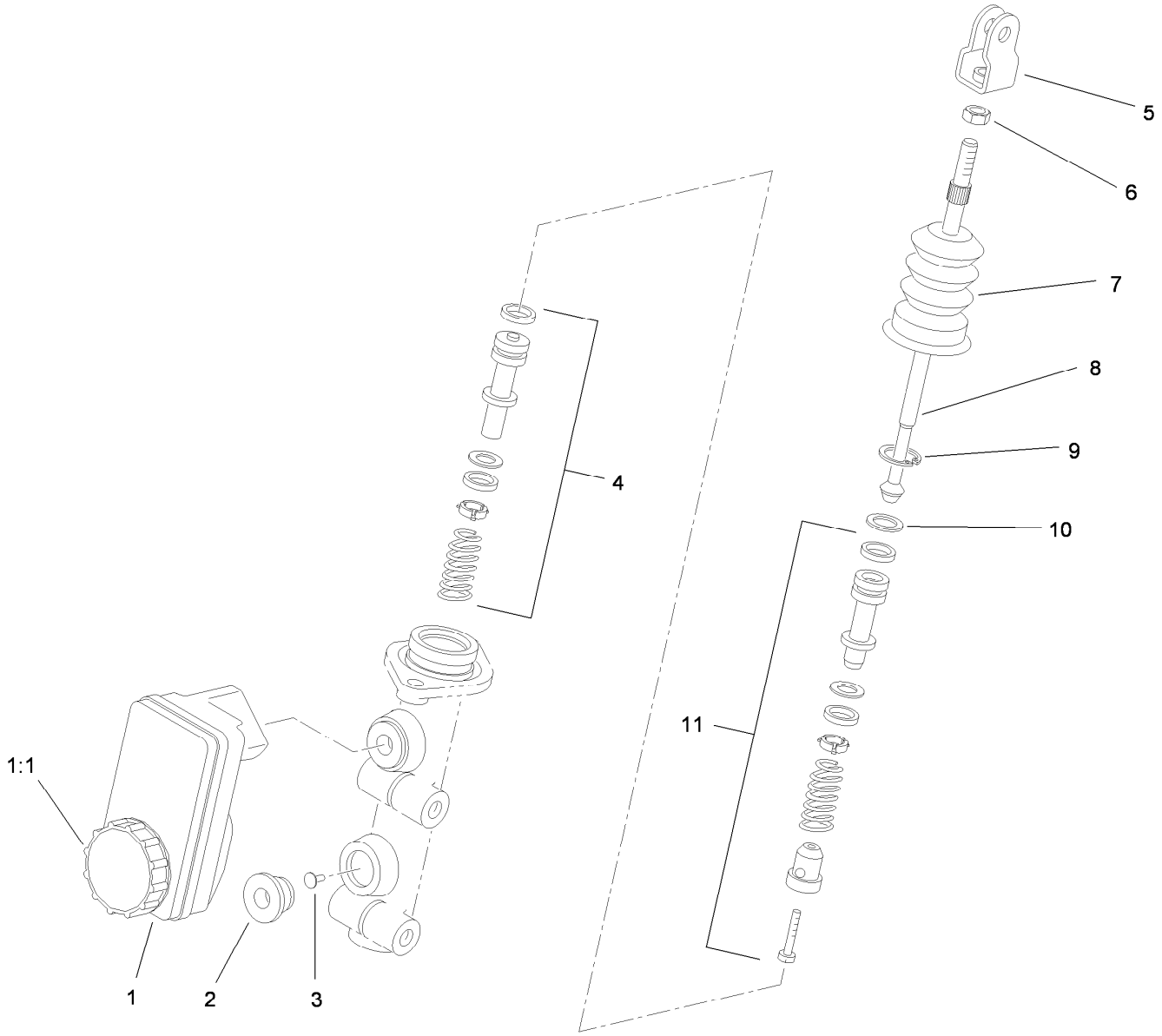

Master Cylinder Assembly No. 104-6782

Ref.	*Part Number*	*Qty.*	*Description*
1	104-6845	1	Reservoir ASM
1:1	92-4112	1	Cap ASM
2	93-8971	2	Seal-Port, Flange
3	92-4103	1	Pin-Stop
4	92-4102	1	Secondary Piston ASM
5	92-4110	1	Clevis
6	21-0360	1	Nut-Hex
7	94-5209	1	Cover-Dust
8	94-5210	1	Rod-Push
9	92-4109	1	Ring-Snap
10	92-4108	1	Retainer-Washer
11	92-4101	1	Primary Piston ASM

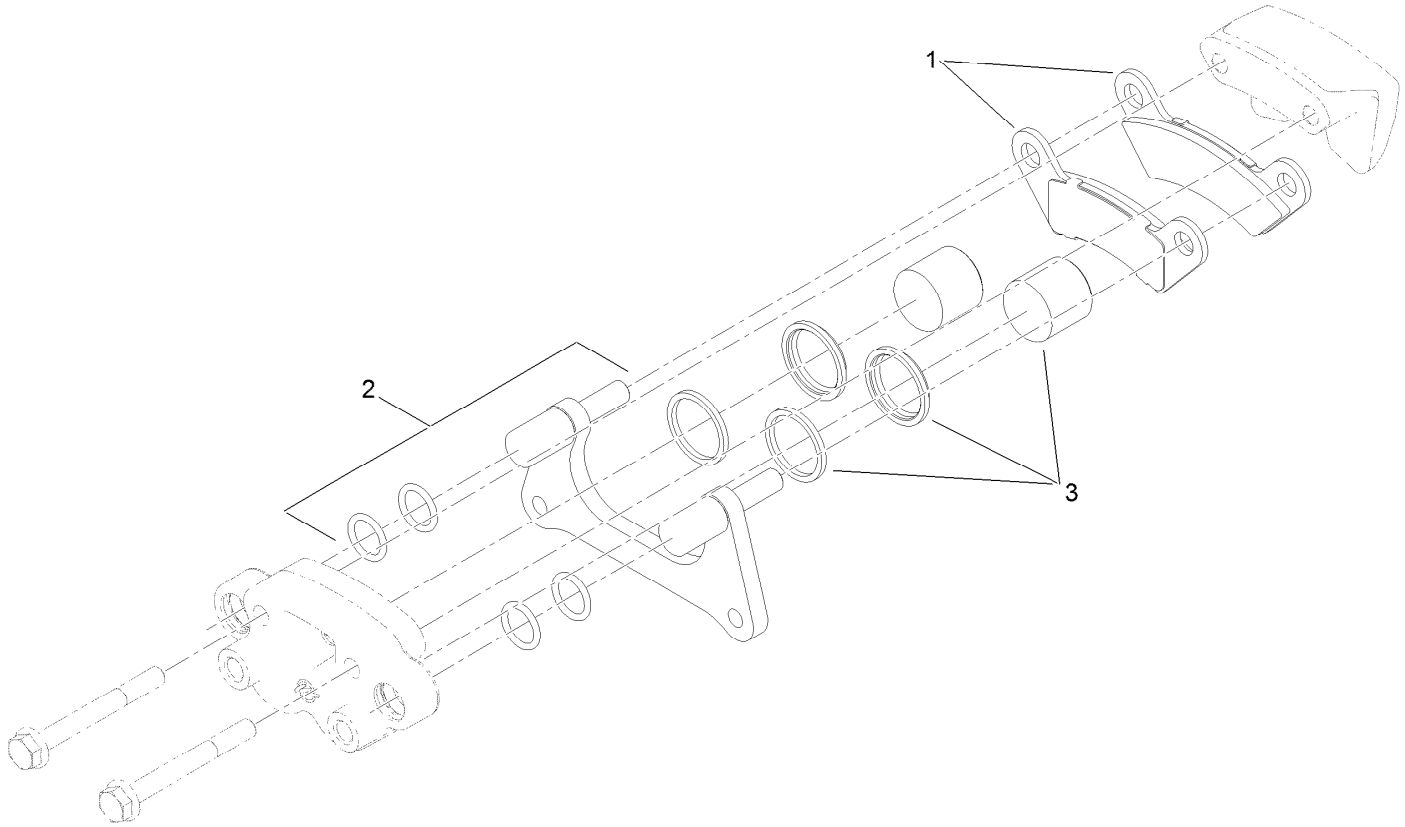

Brake Caliper Assembly No. 127-7424

Ref.	*Part Number*	*Qty.*	*Description*
1	119-9510	1	Pads-Brake
2	119-9511	1	Bracket Kit
3	133-0614	1	Piston Kit

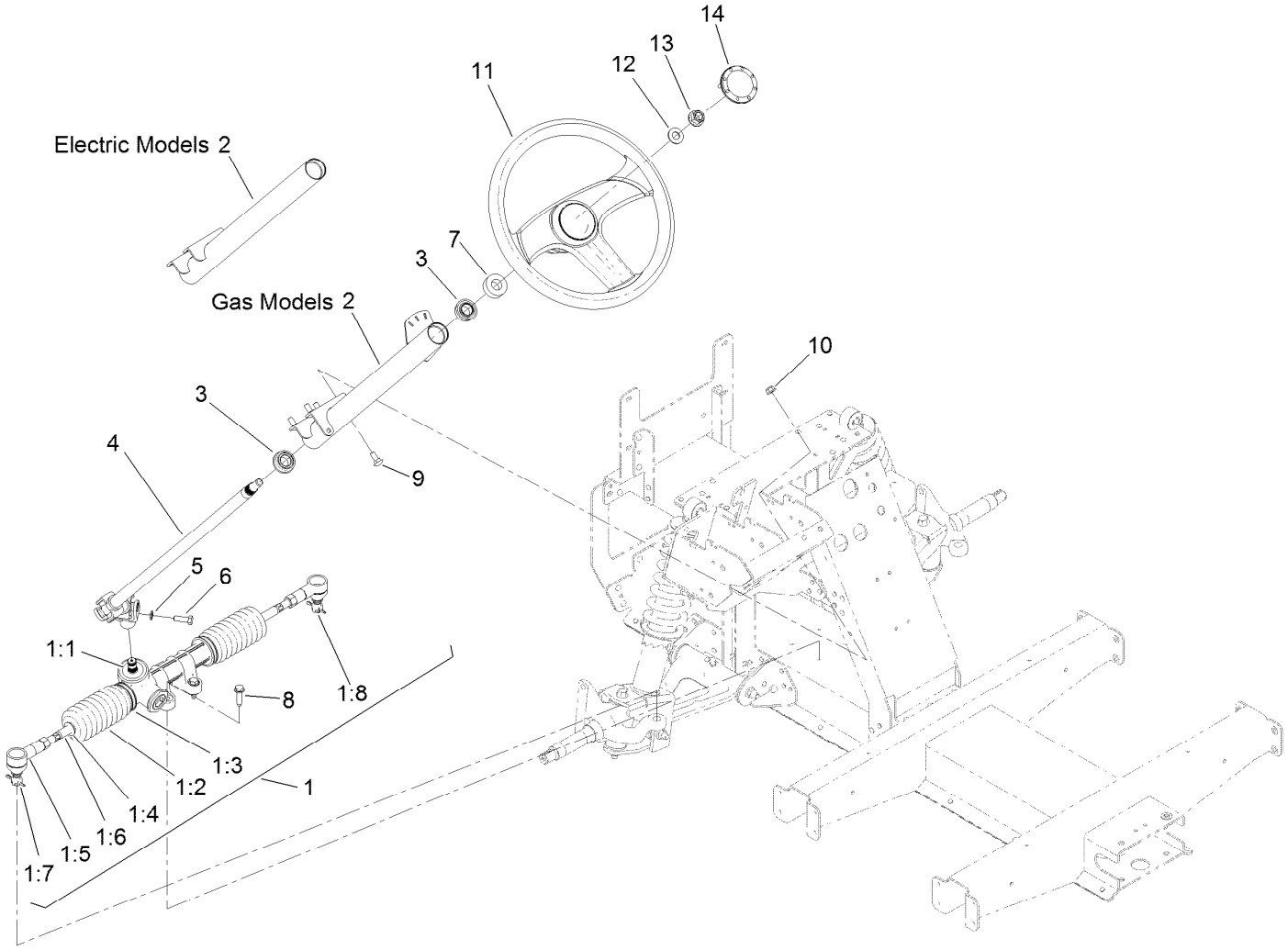

Steering Assembly

Ref.	Part Number	Qty.	Description
1	127-8797	1	Steering Rack ASM
1:1	133-0607	1	Seal-Shaft
1:2	133-0606	2	Bellows
1:3	133-0605	2	Clamp-Bellows, Inner
1:4	133-0604	2	Clamp-Bellows, Outer
1:5	133-0602	2	End-Rod, Track
1:6	133-0601	2	Rod-Tie, Track
1:7	3272-42	2	Pin-Cotter
1:8	137-9891	2	Nut-Slotted, Ball Joint
2	131-8513-03	1	Steering Column ASM
3	112-3262	2	Bearing

Ref.	Part Number	Qty.	Description
4	127-8804	1	Steering Shaft ASM
5	3253-4	1	Washer-Lock
6	116-3515	1	Screw-HH, Special
7	21-9260	1	Cover-Dust
8	32144-49	4	Screw-HWHTF
9	3230-1	4	Bolt-CARR
10	104-8300	4	Nut-HF, NI
11	131-0957	1	Wheel-Steering
12	3256-26	1	Washer-Flat
13	99-5107	1	Nut-Lock
14	131-3630	1	Cap-Wheel, Steering

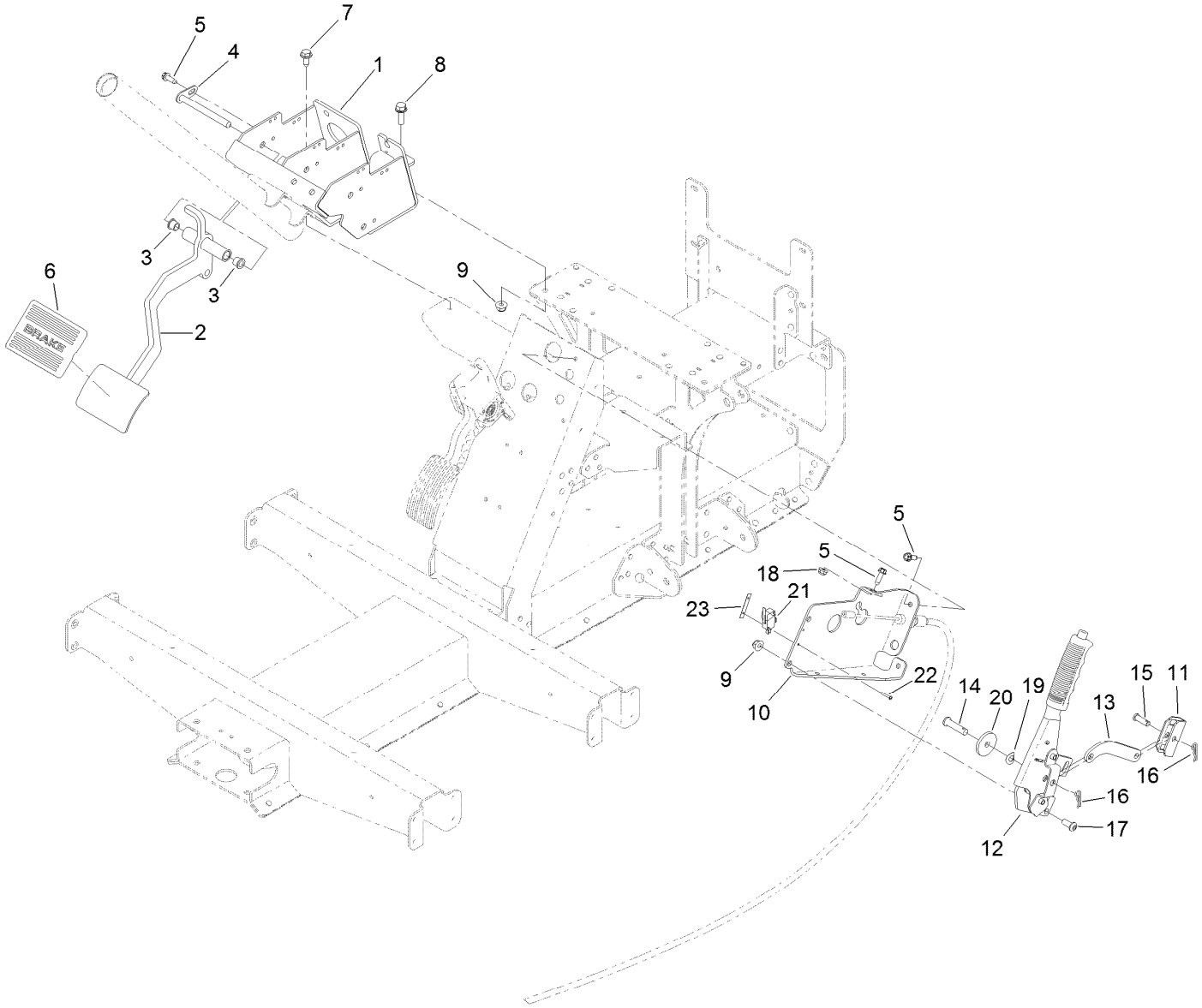

Pedal and Control Assembly

Ref.	Part Number	Qty.	Description
1	127-8817-03	1	Mount-Pedal
2	127-8818-03	1	Pedal-Brake
3	256-116	2	Bushing-Flange
4	131-8459	1	Shaft-Pivot
5	49-2040	4	Screw-HWHTF
6	7-3900	1	Pad-Brake
7	32144-70	2	Screw-HWHTF
8	3234-29	1	Screw-HHF
9	104-8300	3	Nut-HF, NI
10	127-8834-03	1	Mount-Brake, Park
11	87-3480	1	Bracket-Equalizer, Cable
12	131-8320	1	Lever-Brake, Park

Ref.	Part Number	Qty.	Description
13	127-8836-03	1	Link-Brake, Park
14	283-10	1	Pin-Clevis
15	1-808280	1	Pin-Clevis
16	1-806003	2	Pin-Cotter
17	3274-55	2	Screw-HSBH
18	104-7201	1	Nut-HF
19	121-4605	1	Washer-Spring
20	131-8496	1	Washer-Plain
21	108-6496	1	Switch (W/Boot)
22	3290-313	2	Screw-SPH
23	3290-354	1	Nut-Speed

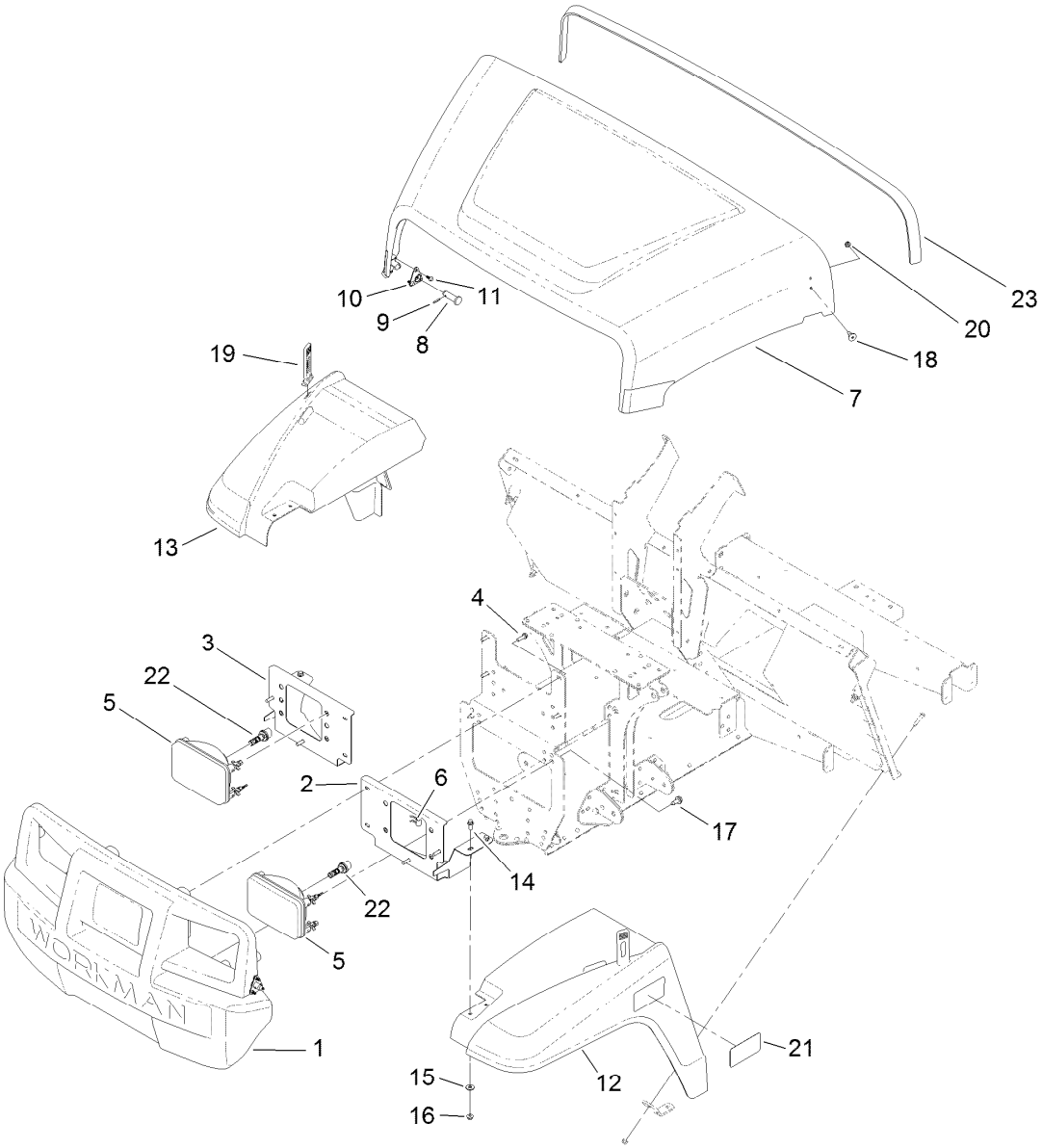

Hood and Fender Assembly

Ref.	Part Number	Qty.	Description
1	132-8530	1	Bumper
2	131-8455-03	1	Bracket-Headlight, LH
3	131-8456-03	1	Bracket-Headlight, RH
4	46-8091	8	Screw-HWH
5	136-6318	2	Housing-Headlight, 12V
6	115-2408	6	Clip-Speed
7	136-6281	1	Hood
8	117-5094	2	Pin-Clevis
9	32121-50	2	Pin-Spring
10	112-3308	2	Retainer-Pin
11	121-9605	6	Screw-HWH
12	127-7771	1	Fender-Front, LH
13	127-7772	1	Fender-Front, RH
14	3234-33	4	Screw-HHF
15	3256-2	4	Washer-Flat
16	104-7201	4	Nut-HF
17	32144-70	2	Screw-HWHTF
18	125-1122	2	Screw
19	131-8402	2	Strap-Hold Down
20	3296-56	2	Nut-Lock, NI
21	131-8516	2	Decal-Fender
22	133-0574	2	Bulb-LED
23	133-7210	1	Seal-Trim, Hood

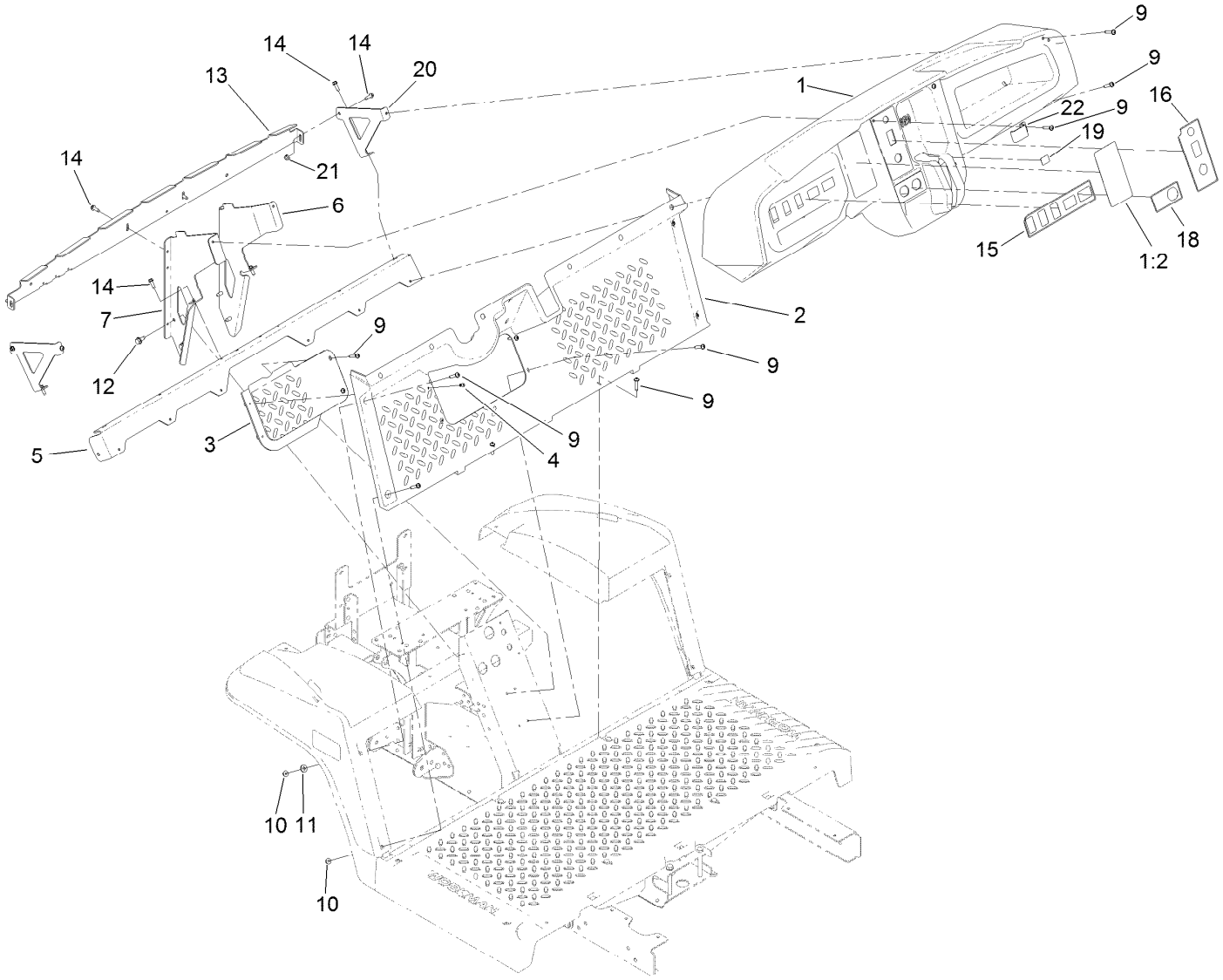

Dash Assembly

Ref.	Part Number	Qty.	Description
1	131-8593	1	Dash
1:2	131-8414	1	Decal-Danger
2	127-7846	1	Footboard
3	127-7847	1	Cover-Footboard
4	107-7461	2	Screw-Plastite
5	127-7831-03	1	Angle
6	131-8336-03	1	Bracket-Dash, RH
7	131-8335-03	1	Bracket-Dash, LH
9	132-6777	20	Screw-TTH
10	104-7201	4	Nut-HF
11	3256-2	2	Washer-Flat

Ref.	Part Number	Qty.	Description
12	32144-70	4	Screw-HWHTF
13	131-8568-03	1	Reinforcement-Dash
14	49-2040	8	Screw-HWHTF
15	131-8411	1	Decal-Dashboard, Electric
16	131-8412	1	Decal-Control Panel, Electric
18	131-8493	1	Decal-USB
19	131-8506	1	Decal-Status, Machine
20	131-8569-03	2	Bracket-Dash, Side
21	104-7201	2	Nut-HF
22	133-7111-03	1	Bracket-Mount, Radio

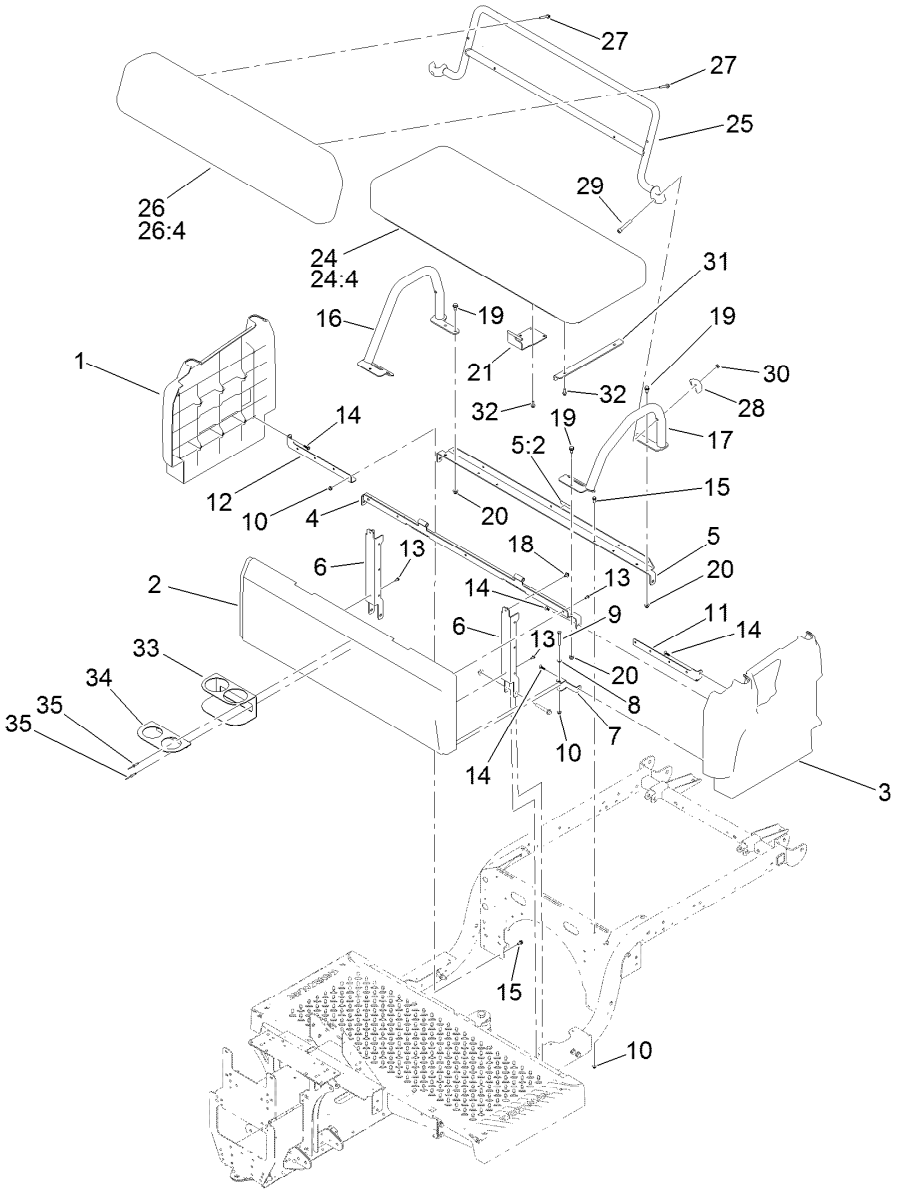

Seatbase Assembly

Ref.	Part Number	Qty.	Description
1	127-7805	1	Side-Base, Seat (RH)
2	133-7188	1	Panel-Seat Base
3	127-7807	1	Side-Base, Seat (LH)
4	133-7345-03	1	Support-Seat
5	137-6991	1	Seat Support ASM
5:2	120-9570	1	Decal-Warning
6	127-7841-03	2	Channel-Support, Seat
7	127-7844-03	2	Clamp-Plate, Floor
8	3256-22	2	Washer-Flat
9	321-18	2	Screw-HH
10	104-7201	8	Nut-HF
11	127-7842-03	1	Bracket-Support, Side (LH)
12	127-7843-03	1	Bracket-Support, Side (RH)
13	112-6349	5	Screw-HWH
14	120-2349	8	Screw
15	3234-33	6	Screw-HHF
16	131-8352-05	1	Restraint-Hip, RH
17	131-8353-05	1	Restraint-Hip, LH
18	46-6810	2	Screw And Washer ASM
19	32144-70	6	Screw-HWHTF

Ref.	Part Number	Qty.	Description
20	104-8300	6	Nut-HF, NI
21	133-7167-03	2	Bracket-Hinge, Seat
24	133-7185	1	Bench Seat Bottom Cushion ASM
24:4	133-7121	1	Cover-Cushion, Bottom
25	133-3079-05	1	Back Rest ASM
26	133-3084	1	Bench Seat Back Rest ASM
26:4	133-7120	1	Cover-Rest, Back
27	32105-18	6	Screw-HHF
28	132-8586-05	2	Casting-Mount, Bench Seat (Back)
29	131-8591	2	Screw-HSH
30	3296-59	2	Nut-Lock, NI
31	133-7186-03	2	Bracket-Support, Bench Seat
32	3234-4	8	Screw-HHF
33	133-7122-05	1	Bracket-Holder, Cup
34	133-7133-05	1	Bracket-Divider, Cup Holder
35	133-7130	4	Rivet-Pop

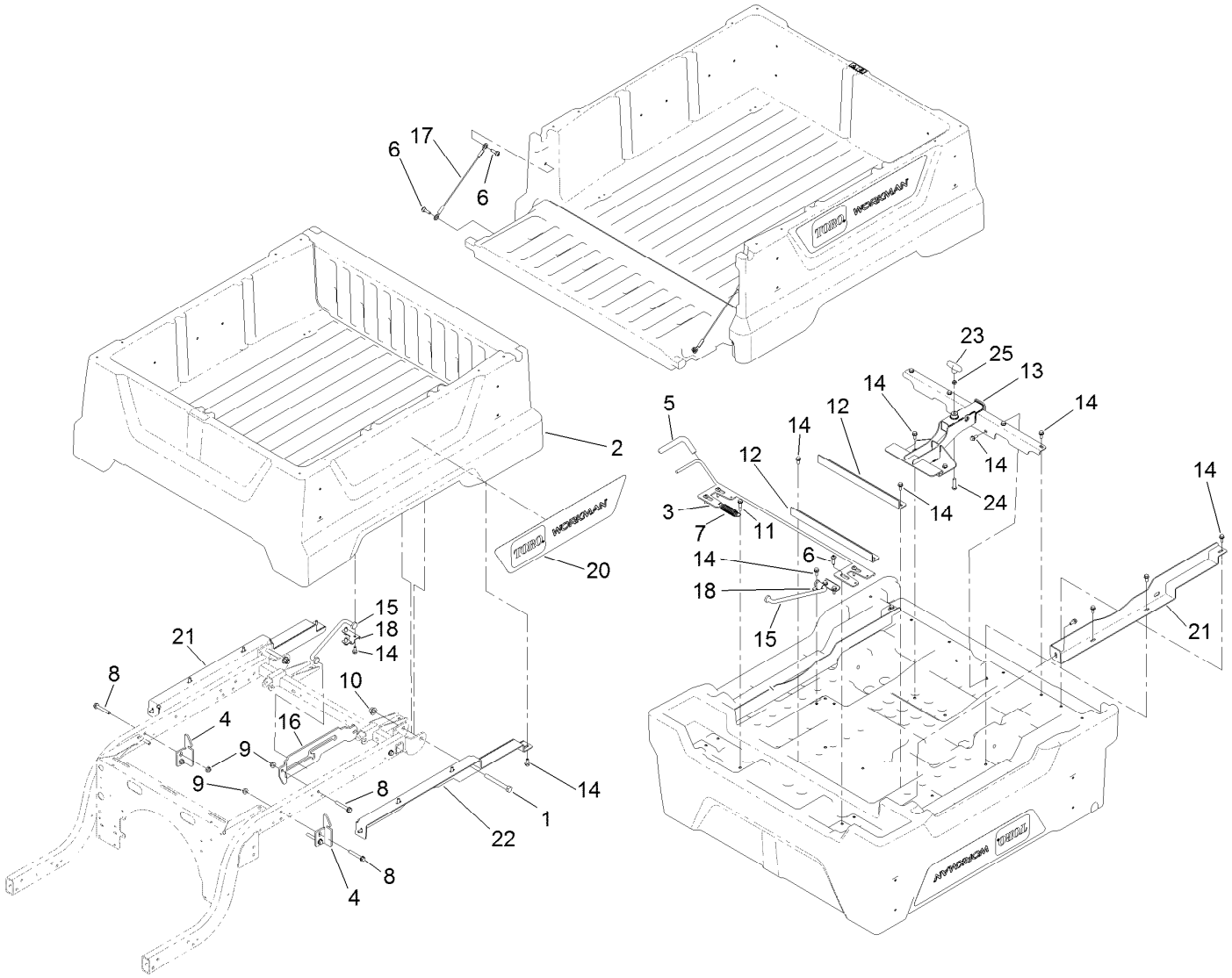

Cargo Bed Assembly

Ref.	Part Number	Qty.	Description
1	325-18	2	Screw-HH
2	131-8592	1	Cargo Bed And Tailgate ASM
3	132-8524	1	Latch
4	127-7428-03	2	Striker-Latch, Bed
5	132-8515	1	Grip-Handle
6	119-2267	8	Screw-Shoulder, BHTF
7	106-5598	1	Spring-Extension
8	3234-39	6	Screw-HHF
9	104-8301	6	Nut-HF, NI
10	99-5107	2	Nut-Lock
11	116-8607	1	Screw-Shoulder
12	132-8526-03	2	Brace-Middle, Bed
13	132-8523-03	1	Attachment-Quick, Class 1
14	3234-5	25	Screw-HHF
15	132-8517	1	Rod-Prop
16	132-8518	1	Bracket-Rod, Prop
17	121-6343	2	Lanyard-Tailgate
18	132-0839	1	Bracket-U, Prop Rod
20	132-8538	2	Decal-Workman
21	133-3042-03	1	Support-Cargo Bed, RH
22	133-3043-03	1	Support-Cargo Bed, LH
23	133-3056	1	Handle-T
24	95-3857	1	Screw-HSBH
25	3218-3	1	Nut-Jam

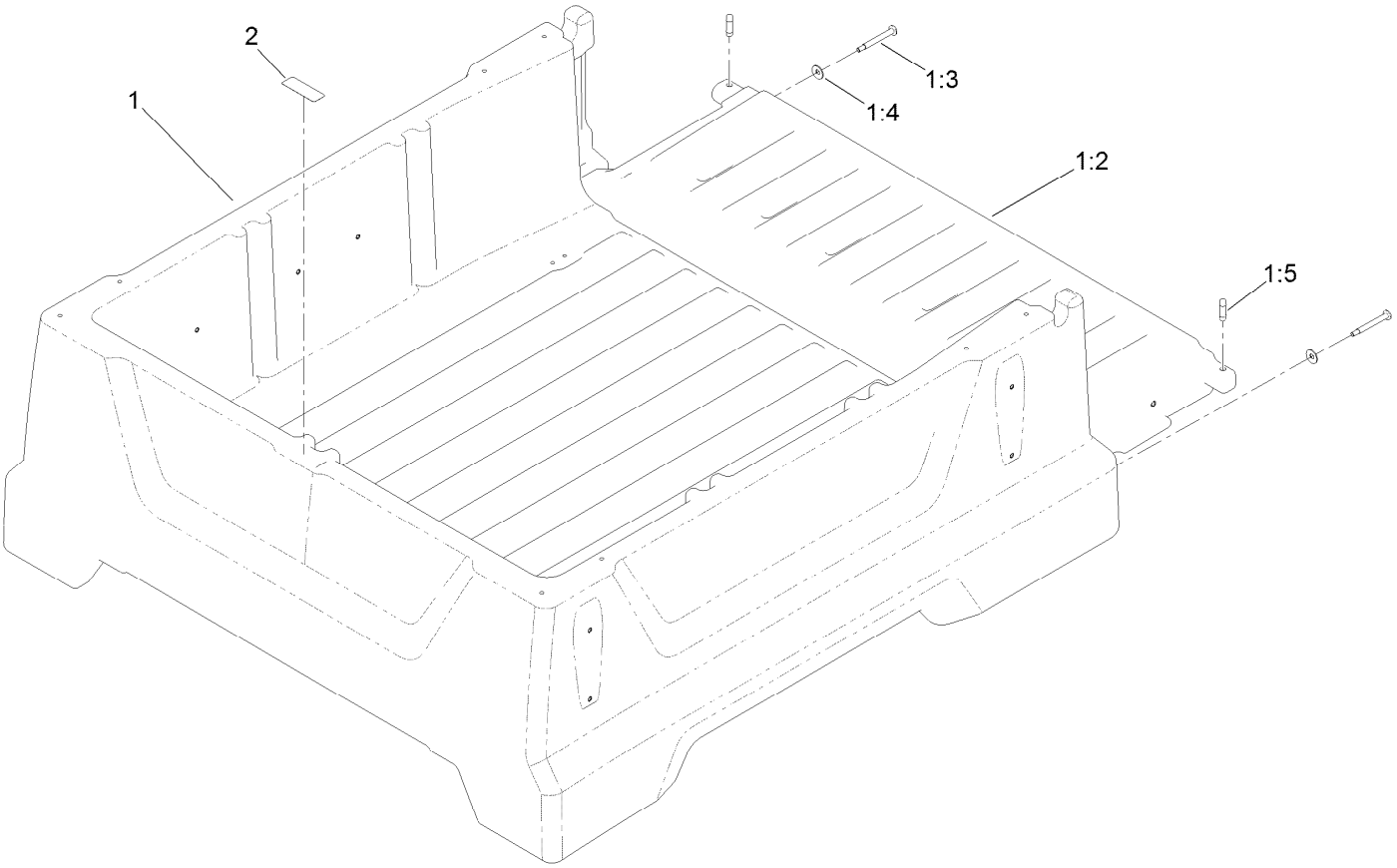

Cargo Bed and Tailgate Assembly No. 131-8592

Ref.	*Part Number*	*Qty.*	*Description*
1		1	Cargo Bed And Tailgate ASM ●
1:2	132-0841	1	Tailgate
1:3	133-7100	2	Screw-Shoulder, Bh (Torx)
1:4	3290-456	2	Washer-Belleville
1:5	133-7146	2	Plug-Tailgate, Anti-Rattle
2	115-7739	1	Decal-No Riders

● Not serviced separately

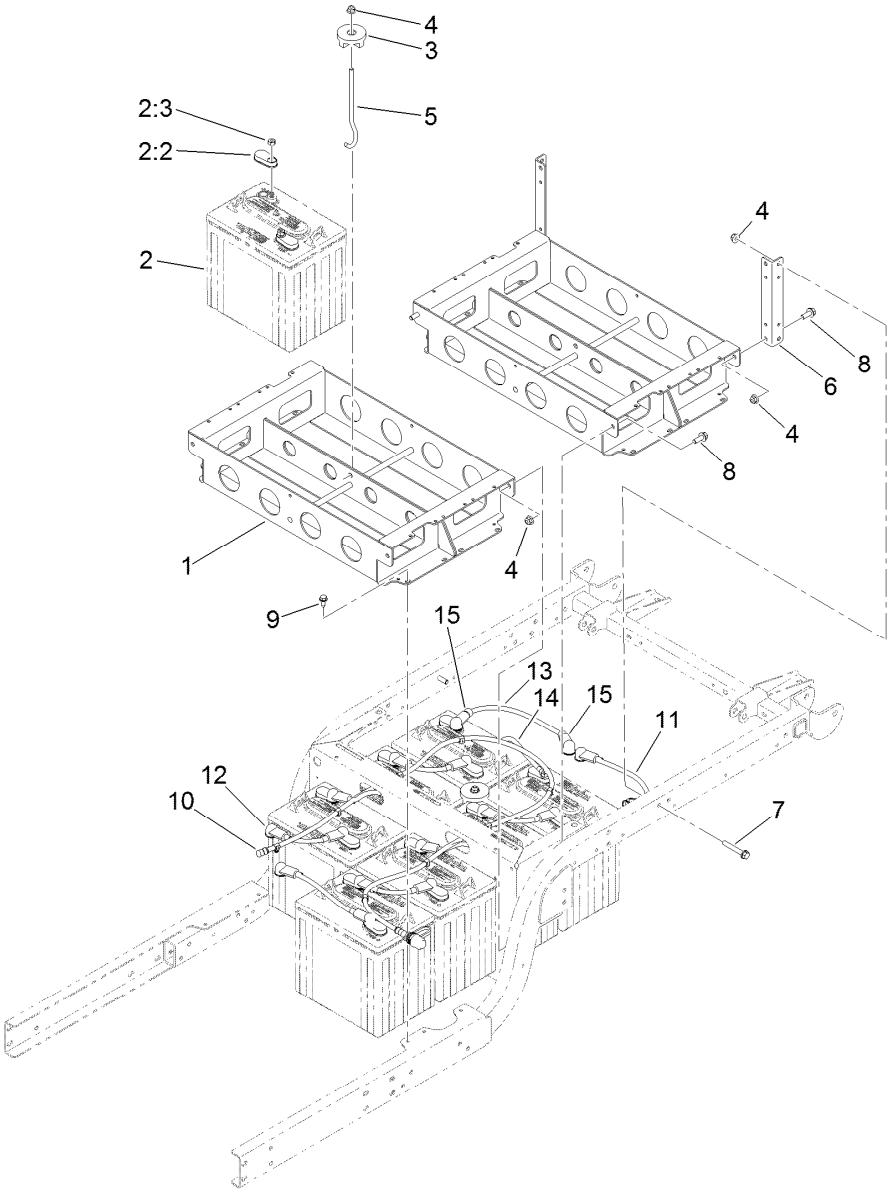

Battery Assembly

Ref.	Part Number	Qty.	Description
1	131-8300-03	2	Battery Tray ASM
2		8	Battery-Lead Acid, Wet ■
2:2	107-0289	2	Cover-Terminal, Battery
2:3	107-0388	2	Nut
3	104-7149	2	Hold Down ASM
4	104-8301	8	Nut-HF, NI
5	131-8387	2	Rod-Battery Hold Down
6	131-8302-03	2	Bracket-Box, Battery
7	3234-39	2	Screw-HHF
8	3234-42	4	Screw-HHF

Ref.	Part Number	Qty.	Description
9	32144-70	4	Screw-HWHTF
10	131-8491	1	Watering Hose ASM
11	107-0739	2	Cable-Battery, Positive
12	107-0738	6	Cable-Battery, Positive
13	122-0750	1	Cable-Battery, Positive
14	94-6168	1	Wire-Ground, Battery
15	32180-009	2	Insulator-Lug, Red
99	107-0392	1	Protection-Terminal, Aerosol ●

● Not illustrated

■ Not serviced separately

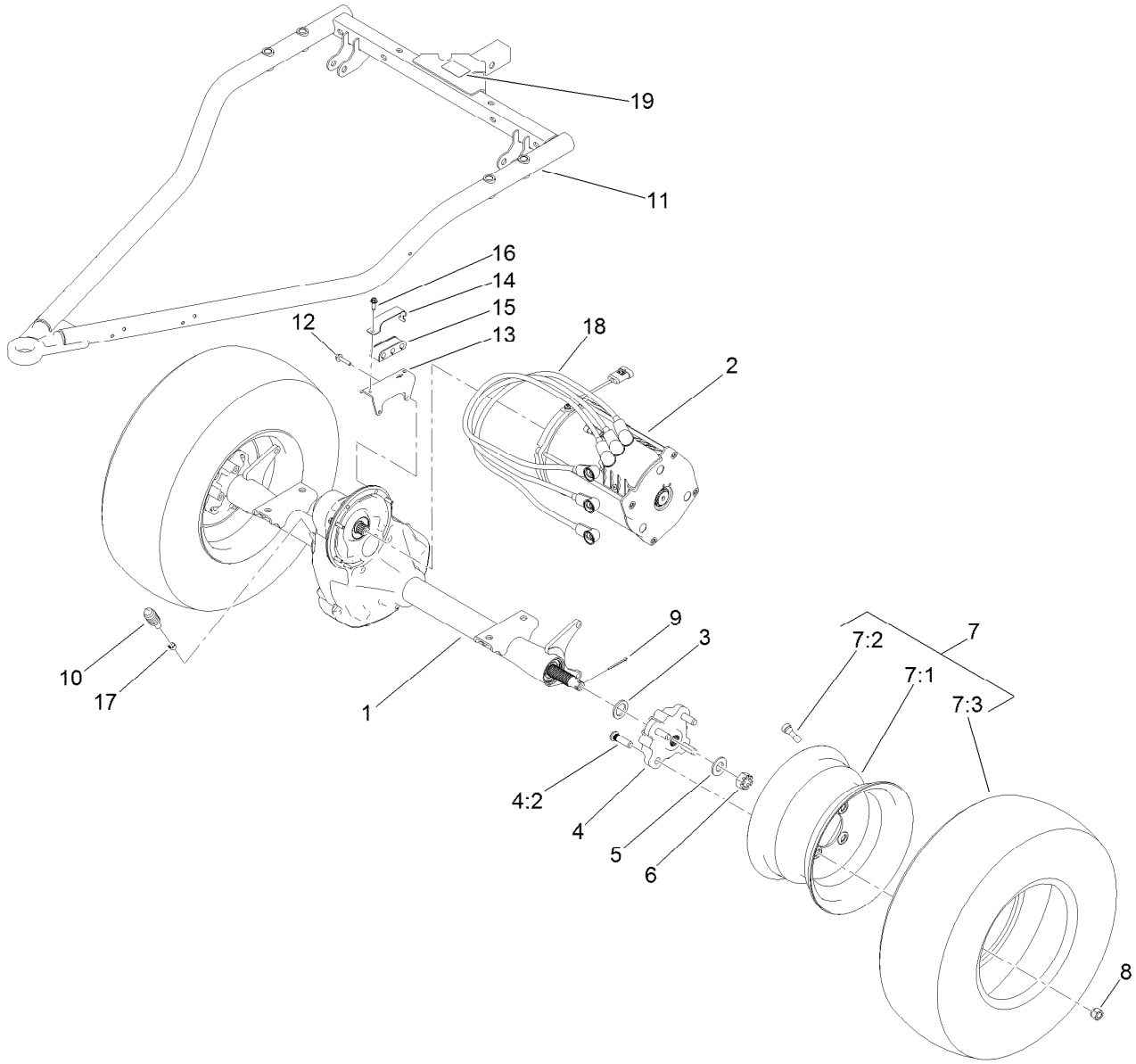

Rear Axle and Motor Assembly

Ref.	Part Number	Qty.	Description
1	136-6340	1	Transaxle ASM
2	131-8485	1	Motor-Electric
3	131-8570	2	Spacer-Hardened
4	127-8848	2	Rear Hub ASM
4:2	10-6830	4	Stud-Type, Drive
5	92-5836	2	Washer
6	32136-5	2	Nut-Hex, Slotted
7	131-8319	2	Tire/Wheel ASM
7:1	131-8317	1	Wheel
7:2	232-27	1	Stem-Valve
7:3	131-8318	1	Tire
8	242-50	8	Nut-Lug
9	1-806800	2	Pin-Cotter

Ref.	Part Number	Qty.	Description
10	127-8859	1	Bellows-Breather
11	131-8340-03	1	Arm-Swing
12	33103-030	6	Screw-HHF
13	131-8416	1	Bracket-Cable
14	131-8482	1	Retainer-Isolator
15	131-8420	1	Isolator-Clamp
16	49-2040	1	Screw-HWHTF
17	2412-146	1	Clamp-Hose
18	122-0743	3	Cable-Battery, Positive
19	131-8598	1	Decal-Rating, Hitch
99	107-0392	1	Protection-Terminal, Aerosol ●

● Not illustrated

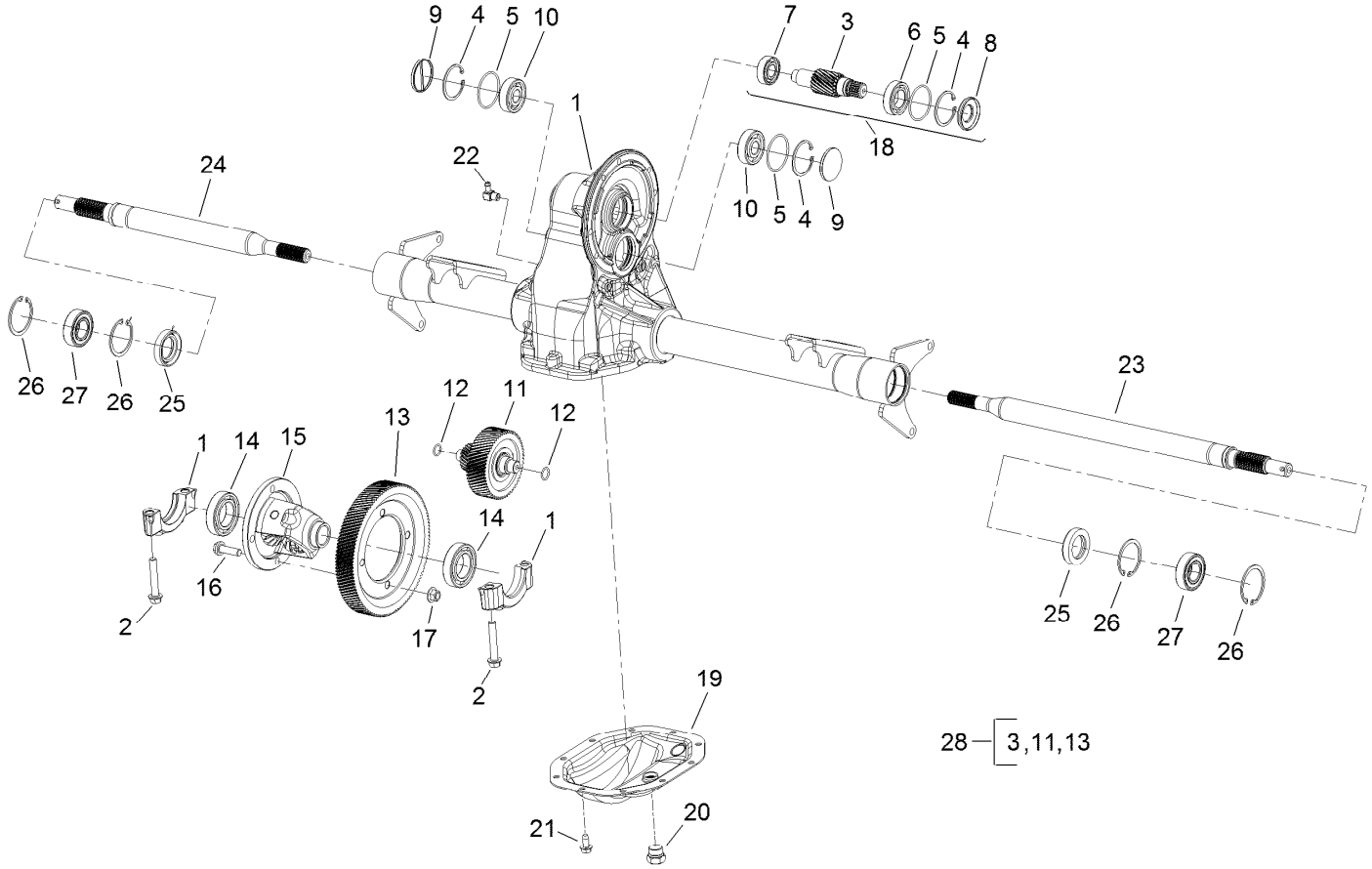

Transaxle Assembly No. 136-6340

Ref.	Part Number	Qty.	Description
1	133-2447	1	Housing-Axle
2	133-2448	4	Bolt-Cap, Bearing
3	133-2485	1	Gear-Input
4	133-2450	3	Ring-Retaining
5	133-2451	3	O-Ring
6	133-2452	1	Bearing-Ball
7	133-2453	1	Bearing-Ball
8	133-2454	1	Seal-Oil
9	133-2455	2	Plug-Cap, End
10	133-2456	2	Bearing-Ball
11	133-2486	1	Intermediate Gear ASM
12	133-2458	2	O-Ring
13	133-2459	1	Gear-Drive, Final
14	133-2460	2	Bearing-Ball

Ref.	Part Number	Qty.	Description
15	133-2461	1	Differential ASM
16	133-2462	4	Bolt-HHF
17	133-2463	4	Nut-Lock
18	133-2487	1	Input Gear Kit
19	136-6341	1	Plate-Cover
20	133-2466	1	Plug-HH
21	133-2467	10	Screw-Tapping
22	133-2468	1	Elbow-Hose
23	133-2469	1	Shaft-Axle, LH
24	133-2470	1	Shaft-Axle, RH
25	133-2471	2	Seal-Oil
26	133-2472	4	Ring-Retaining
27	108-2425	2	Bearing-Ball
28	108-2409	1	Internal Gear Kit

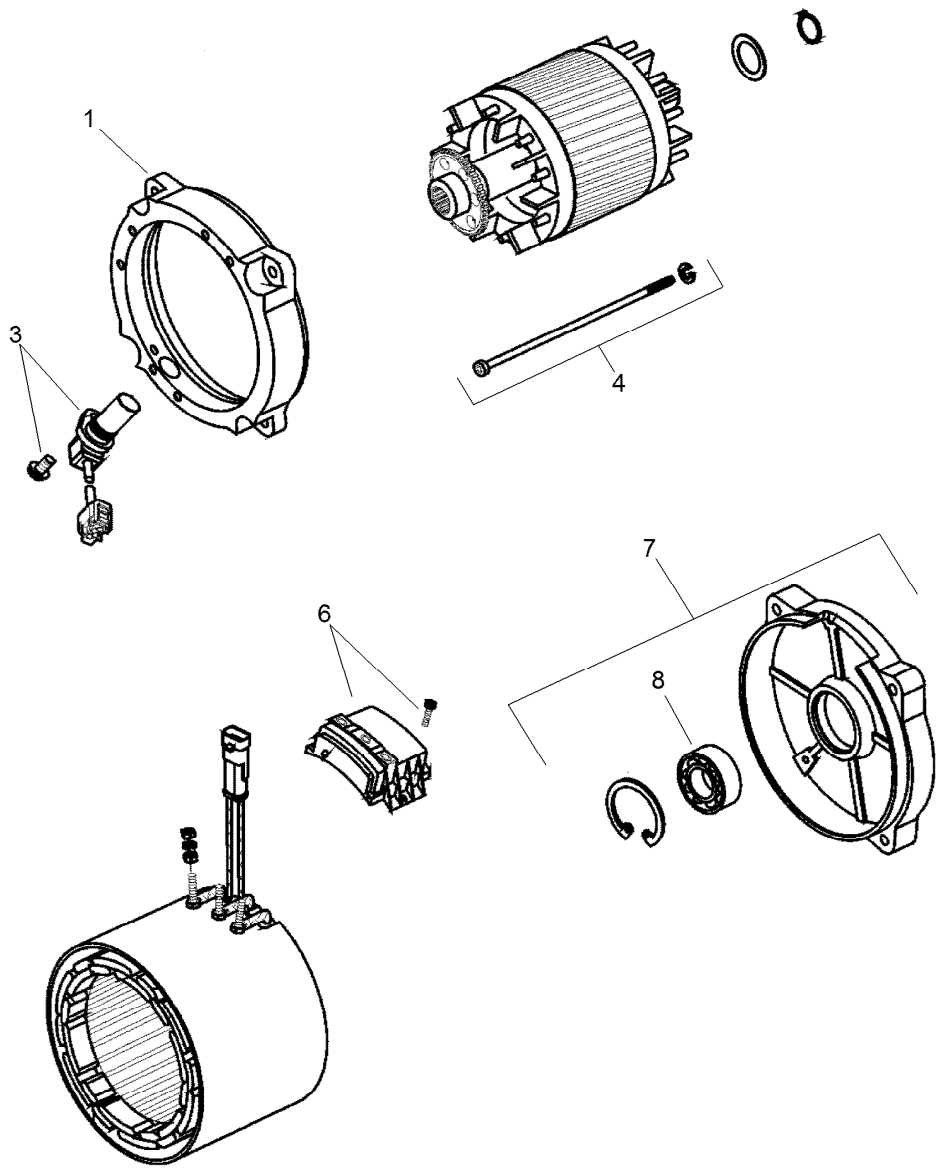

Electric Motor Assembly No. 131-8485

Ref.	*Part Number*	*Qty.*	*Description*
1	132-4924	1	Bracket-End, Drive
3	132-4925	1	Sensor
4	132-4926	1	Screw
6	132-4927	1	Plate-Connection
7	132-4928	1	Bracket-End, Rear
8	132-4929	1	Bearing

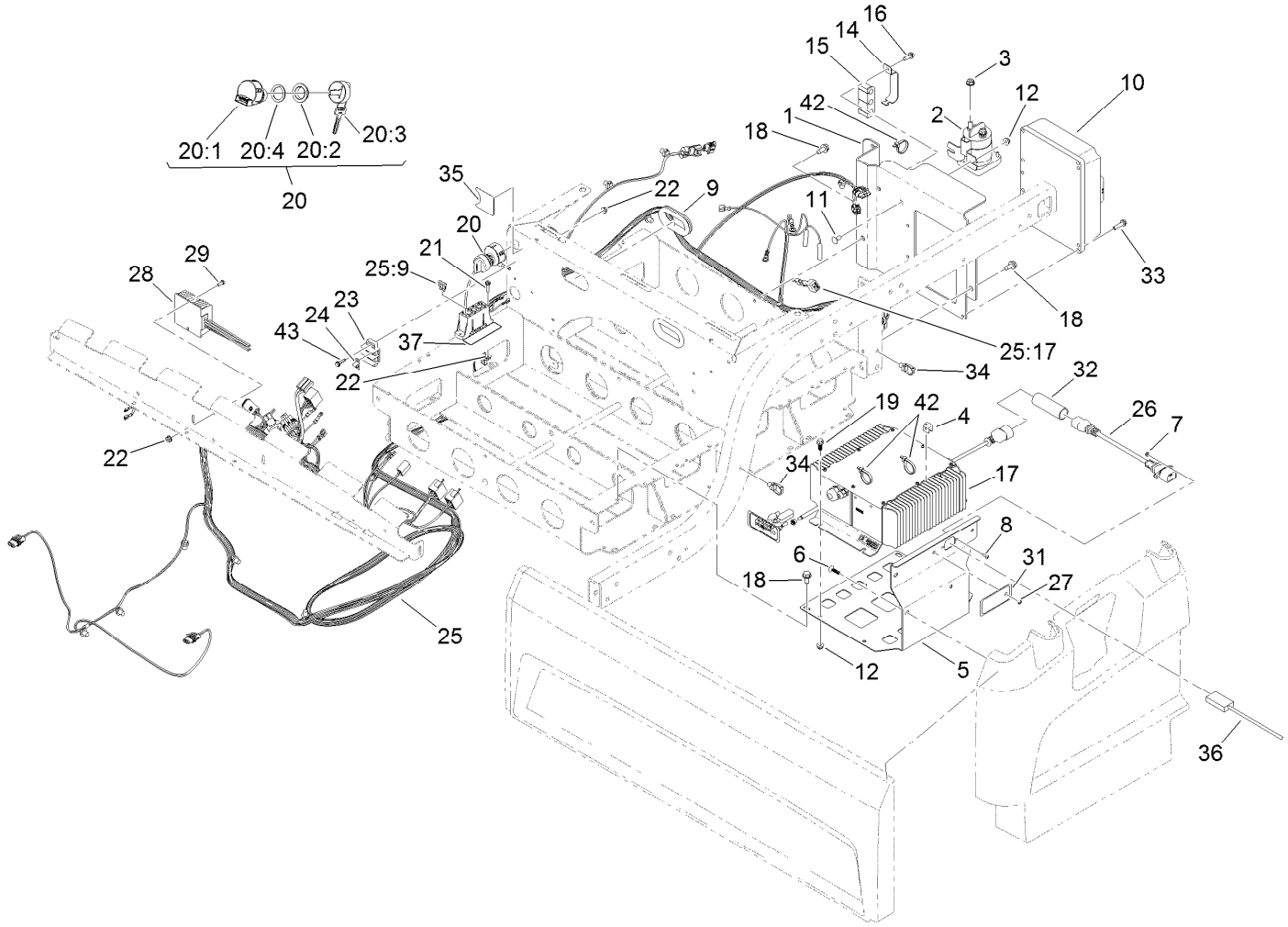

Controller Assembly

Ref.	Part Number	Qty.	Description
1	131-8415-03	1	Bracket-Controller
2	104-7136	1	Contactor-48V
3	107-0380	2	Nut-HHF
4	32180-082	1	Clip-Edge W/Tie, Perpendicular
5	131-8483-03	1	Bracket-Charger
6	120-2349	4	Screw
7	3296-9	2	Nut-Hex
8	3249-3	2	Screw-PRH
9	240-12	2	Grommet
10	127-2767	1	Controller-Sevcon
11	3229-11	2	Screw-CARR
12	104-7201	6	Nut-HF
14	131-8482	1	Retainer-Isolator
15	131-8420	1	Isolator-Clamp
16	49-2040	1	Screw-HWHTF
17	131-8490	1	Charger-48V Onboard
18	32144-70	5	Screw-HWHTF

Ref.	Part Number	Qty.	Description
19	99-6810	4	Screw-HHF
20	110-2580	1	Switch-Key, Supervisor
20:1		1	Switch-Key ●
20:2	108-8660	1	Nut-Mounting
20:3	110-5221	1	Set-Key, Supervisor
20:4	108-8659	1	Washer-Backup
21	32105-13	2	Screw-HWH
22	3290-148	4	Nut-HF
23	42862	1	Block-Terminal, Ground
24	42863	1	Strip-Jumper
25	122-0524	1	Harness-Wire, 48V Vehicle
25:9	117-4724	1	Fuse-Blade, 10A
25:17	100-4918	2	Diode
26	131-8497	1	Cordset
27	131-8499	1	Holder-LED
28	131-8509	1	Converter-48V To 12V
29	32105-8	2	Screw-SHH
31	131-8495	1	Decal-Function, Charger

● Not serviced separately

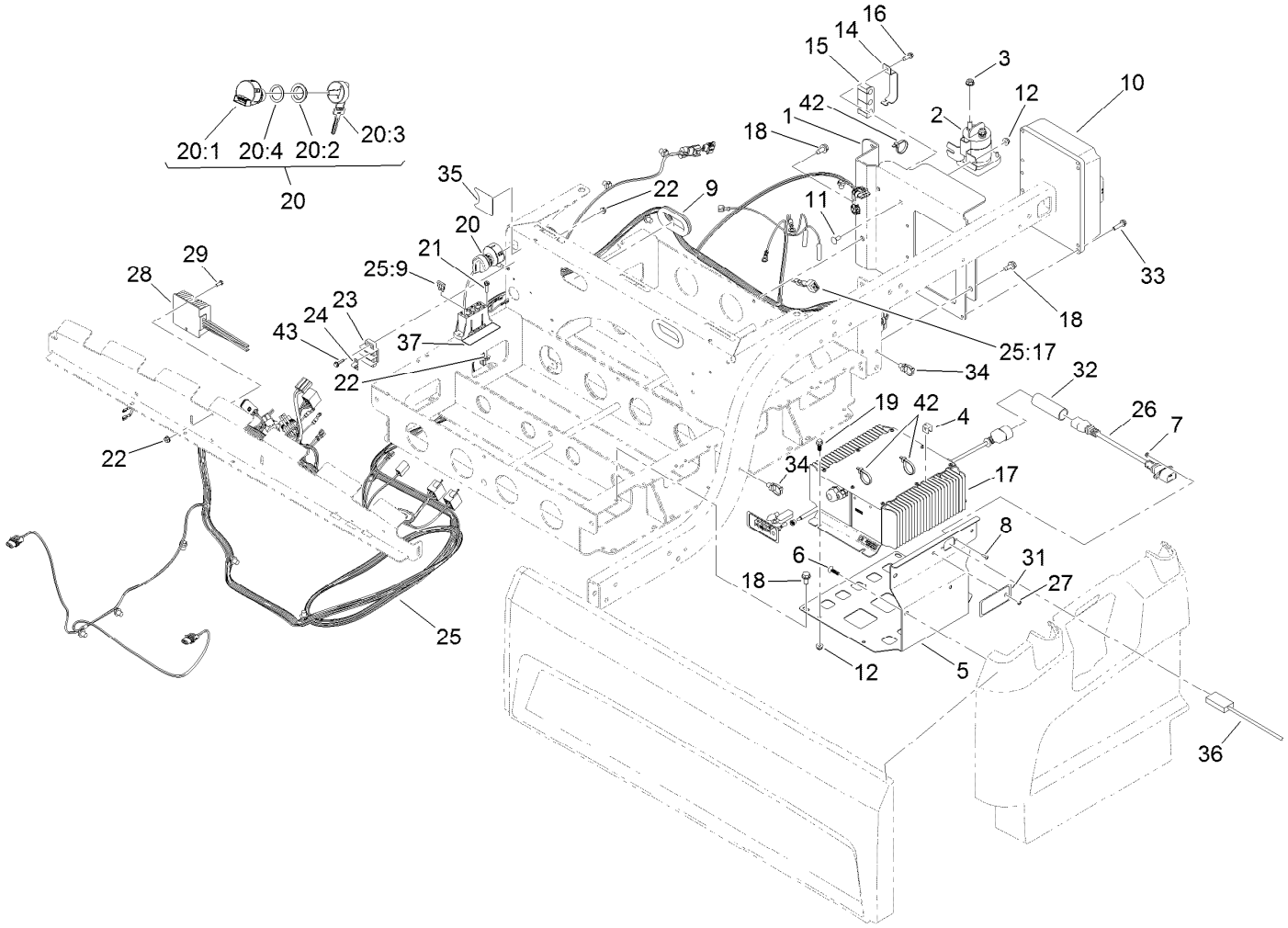

Controller Assembly (continued)

Ref.	Part Number	Qty.	Description
32	107-0341	1	Tube-Shrink, Heat
33	32144-86	4	Screw-HWHTF
34	32180-030	3	Clip-Tie
35	131-8527	1	Decal-Mode
36	107-0382	1	Powercord-AC, Europe

Ref.	Part Number	Qty.	Description
36	107-0383	1	Powercord-AC, U.K.
36	107-0384	1	Powercord-AC
37	131-8551	1	Decal-Fuse Block, 48V
42	3290-378	3	Tie-Cable
43	100-4351	2	Screw-HWH

● Not serviced separately

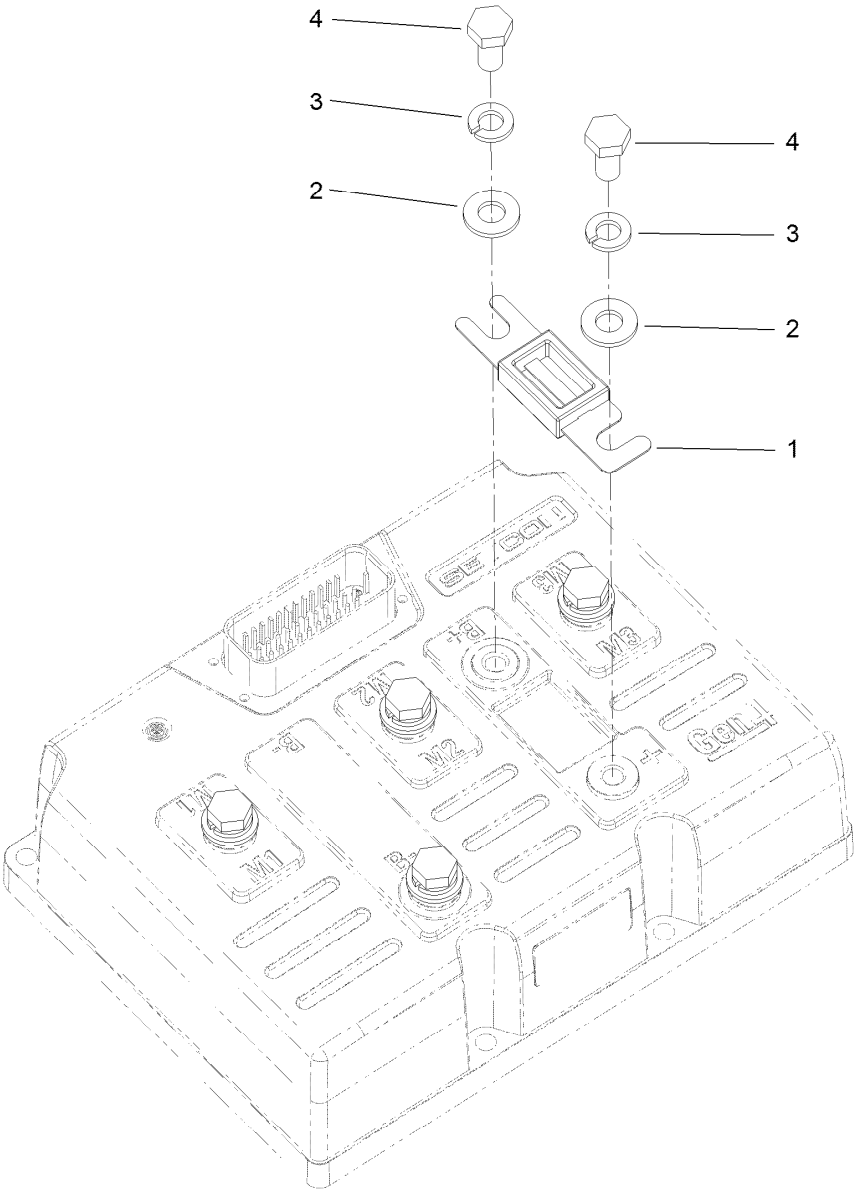

Sevcon Controller Assembly No. 127-2767

Ref.	*Part Number*	*Qty.*	*Description*
1	131-8494	1	Fuse-425 Amp
2	33094-00	6	Washer-Plain
3	3253-4	6	Washer-Lock
4	33114-016	6	Screw-HH

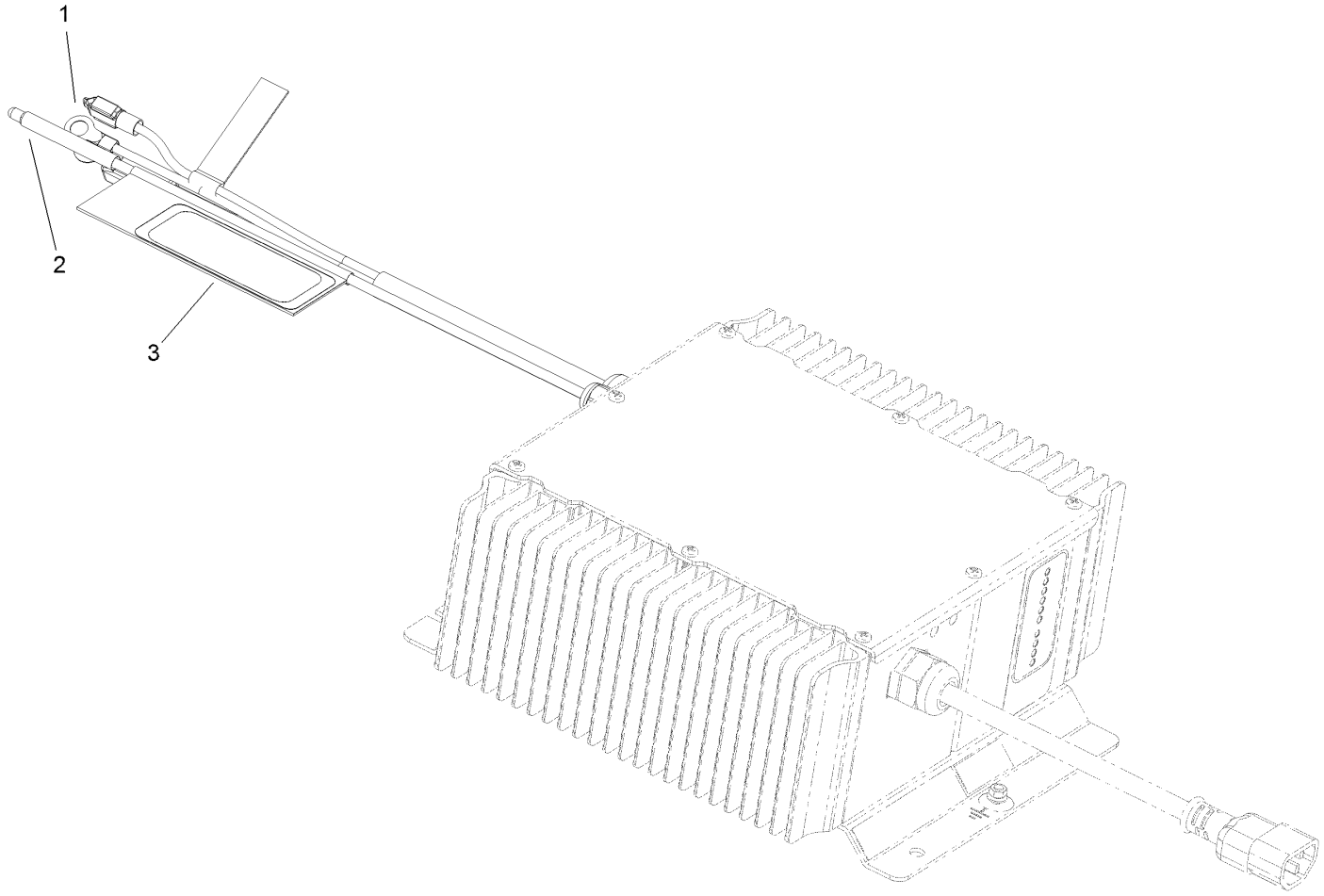

Onboard Charger Assembly No. 131-8490

Ref.	*Part Number*	*Qty.*	*Description*
1	131-8511	1	Thermister Repair Kit
2	131-8512	1	Remote LED
3	131-8495	1	Decal-Function, Charger

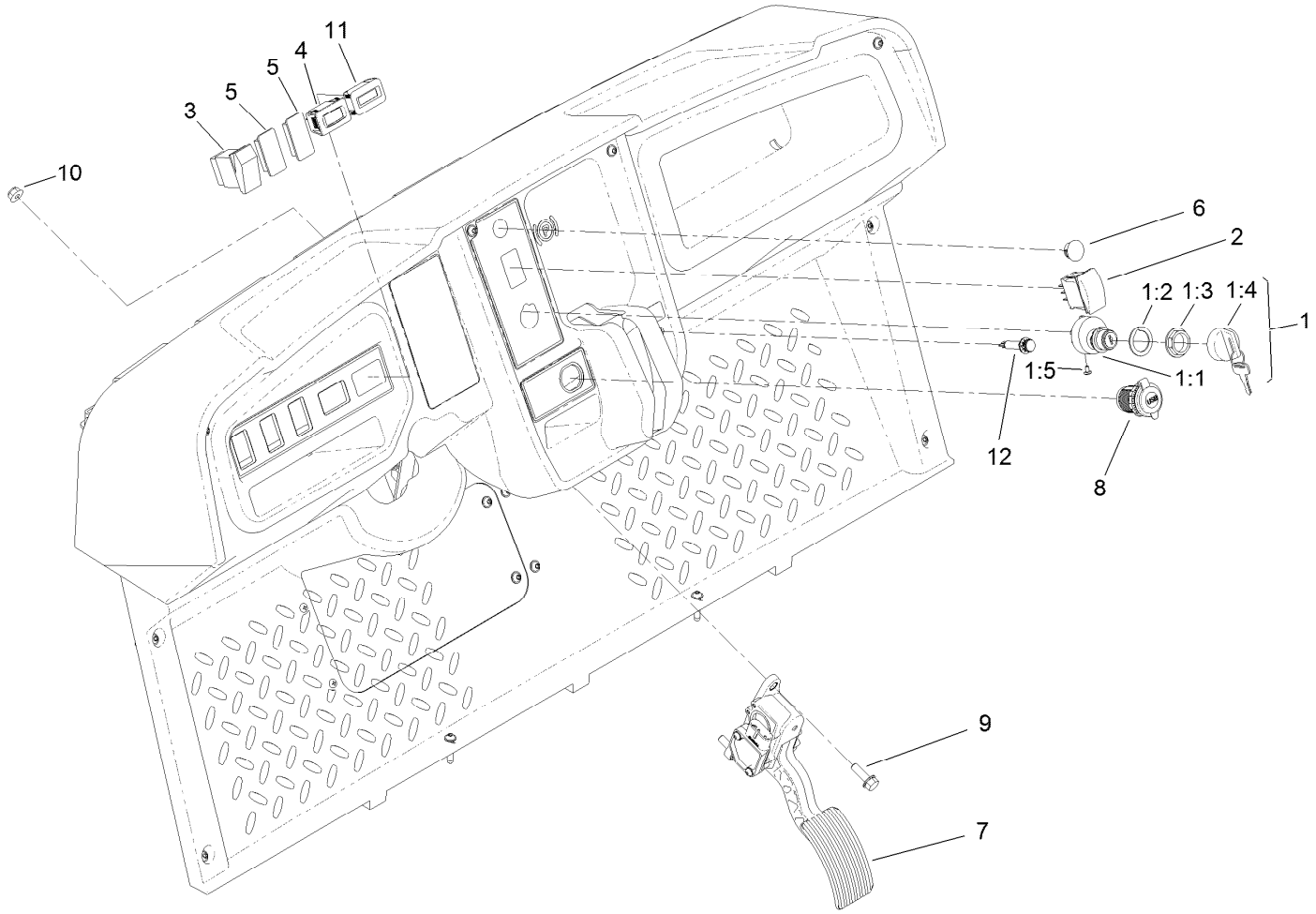

Accelerator Pedal and Key Switch Assembly

Ref.	Part Number	Qty.	Description
1	120-4815	1	48V Key Switch ASM
1:1		1	Switch-Key ●
1:2	108-8659	1	Washer-Backup
1:3	108-8660	1	Nut-Mounting
1:4	106-5270	1	Ignition Key Set
1:5	3250-28	3	Screw
2	122-0784	1	Switch-Rocker, On-Off-On
3	95-8999	1	Switch
4	120-2244	1	Hourmeter

Ref.	Part Number	Qty.	Description
5	99-7420	2	Plug-Hole
6	94-5627	1	Plug
7	121-9675	1	Accelerator Pedal ASM
8	131-8388	1	Socket-USB
9	3234-29	3	Screw-HHF
10	104-8300	3	Nut-HF, NI
11	131-8381	1	Gauge-Battery
12	131-8383	1	Light-Indicator

● Not serviced separately

Attachments and Accessories

For 07153 Workman GTX Electric Utility Vehicle with Bench Seat

Product Name	Model/Part
Multi-passenger Kit	07133
Bucket Seat Base Kit (2016)	07134
Bench Seat Base Kit (2016)	07135
48V Electric Lift Kit	07143
Brush Guard Kit	07145
Front Hitch Kit, Workman GTX Series Utility Vehicles with Brush Guard	07146
Front Hitch Kit, Workman GTX or MDX Series Utility Vehicles without Brush Guard	07147
Steel Flat Bed Kit	07148
Extended Bed Kit	07149
Storage Box Kit	07156
Ball Picker Mounting Bracket Kit	07157
Walk Spreader Mounting Kit	07029
6in L-Track Kit	07158
2in L-Track Kit	07159
Hose Reel Mounting Kit	07027
Class 1 Draw Bar Kit	133-3095
Aggressive Tire Kit	07423
Hand Pump Hose Asm	131-8522
Horn Kit	133-3017
Reverse Alarm Kit	131-8549
Power Point Kit	131-8550
Power Converter Kit	133-0959
Trash Can Mounting Kit	07028
Bed Rack Kit	07031
Cab Kit	07142
Canopy Kit	07140
Canopy Kit, Multi-passenger Workman GTX Utility Vehicle	07141
Mount-Ball	133-7116
Brake and Signal Light Kit	133-7127
Road Light and Homologation Kit	133-7128
48V 6 Foot Bed Electric Lift Kit	07168
Front Spring Kit	133-7145
Canopy Mount Kit, Workman GTX Utility Vehicle with Extended Flatbed	133-7160
Tire-20 8.00-10	116-7333
MVP Kit 400 Hour	136-6280
Cab Mount Kit, Workman GTX Utility Vehicle with Extended Flatbed	133-7198
Service Hood ASM	133-7209
ROPS Kit	07032
Crated Finishing Kit	07045
Cargo Bed Kit	07046
Bench Seat Base Kit	07047
Bucket Seat Base Kit	07048
Extension Kit	07049
Small Bedrack Mount Grip Kit	136-6311
Large Bedrack Mount Grip Kit	136-6312
Wireless Hourmeter Kit	136-6324

Attachments and Accessories (continued)

Optional Rear Tire GTX-K500 137-2785
Deionizer-Water 137-2884
Plate-Skid 137-2887-03
Seat Hinge Kit 133-7346

Notes:

Notes:

Notes:

TORO®

Count on it.