TORO®

MODEL NO. 04059

INSTALLATION INSTRUCTIONS

LIGHT KIT
GREENSMASTER 800/1000/1600

⚠ CAUTION

Before servicing or making adjustments to the machine, stop engine and remove key from the switch.

1. Loosen retainer securing V−belt cover and pivot cover open.

2. Remove capscrews, flatwashers and lockwashers securing V−belt cover and mounting bracket to differential housing. Remove cover. Retain mounting bracket, capscrews, flatwashers and lockwashers for re−assembly.

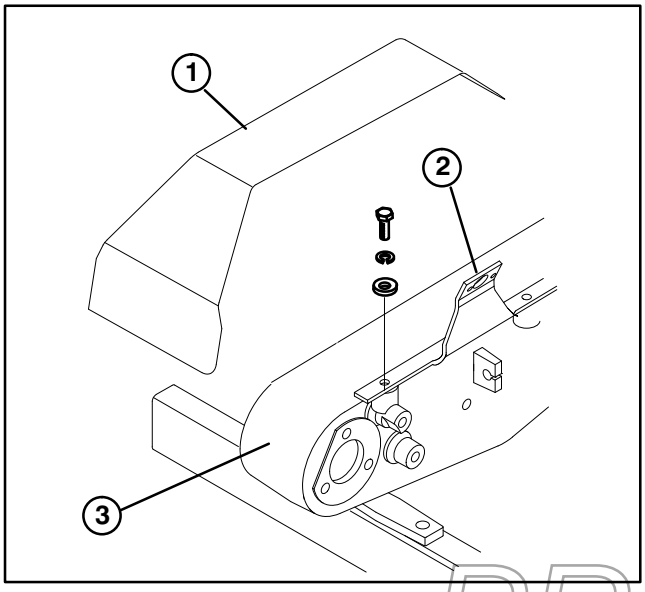

Figure 1
1. V−belt cover
2. Mounting bracket
3 Differential housing

3. Remove capscrew, lockwasher, and spacer securing drive pulley to engine PTO shaft and discard (Fig. 2).

4. Mount new generator drive pulley to engine PTO shaft with tapered screw provided (Fig. 3). Apply anti−seize compound to screw threads.

5. Remove capscrew and lockwasher securing clutch interlock module bracket to side of engine (Fig. 2). Discard capscrew and lockwasher.

6. Remove R−clamp securing module wire harness to back of engine (Fig. 2). Discard capscrew, R−clamp and external tooth lockwashers.

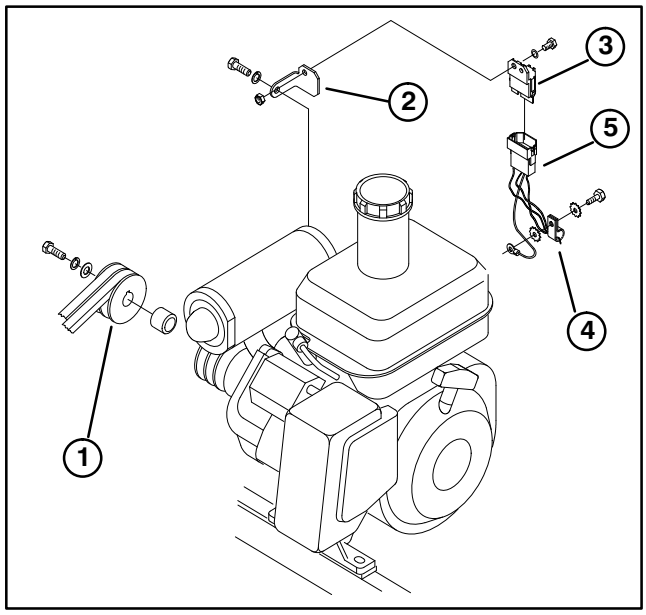

Figure 2
1. Drive pulley
2. Clutch interlock module bracket
3. Clutch interlock module
4. R−clamp
5. Wire harness

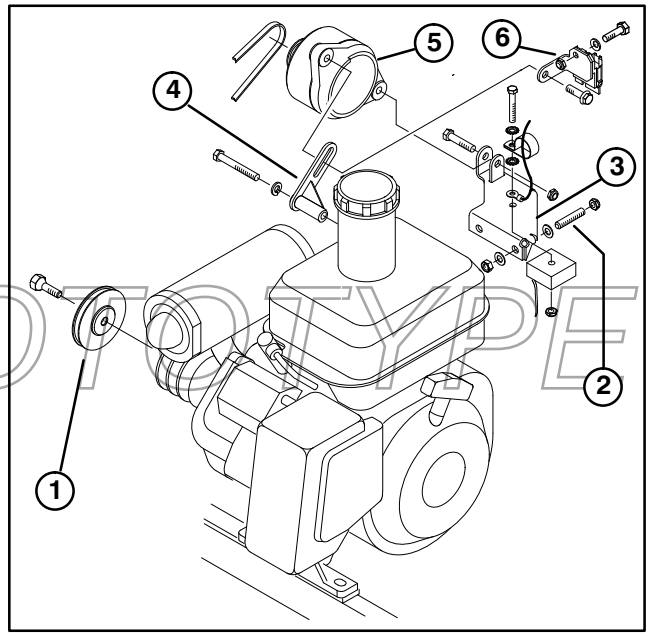

Figure 3
1. Generator drive pulley
2. Setscrews
3. Generator bracket
4. Pivot assembly
5. Generator
6. Clutch interlock module bracket

PROTOTYPE

© The TORO Company − 1998

7. Apply #242 Loctite to threads of (2) setscrews (Fig. 3). Thread screws into bosses on back of engine. Using a 4mm hex wrench, tighten setscrews until they bottom out in bosses. Wipe off excess Loctite.

8. Thread a nut onto each setscrew until flush with engine boss. Place a flatwasher onto each setscrew. Slide generator bracket onto setscrews and loosely secure with (2) flatwashers and nylon insert locknuts (Fig. 3).

9. Secure pivot assembly to boss on side of engine with a capscrew and lockwasher (Fig. 3).

10. Install generator (Fig. 3). Fasten non−threaded flange of generator to generator bracket with a capscrew and nylon insert locknut. Do not over−tighten capscrew, generator must be able to rotate freely.

11. Using a flanged head capscrew, mount clutch interlock module/bracket assembly to pivot assembly and generator (Fig. 3).

12. Place a straight edge on generator drive pulley and on generator pulley. These pulleys must be inline and parallel within .030". Adjust by backing out one of the standard nuts on generator bracket. After pulleys are aligned, tighten nylon insert locknuts securing generator bracket to engine. Verify alignment of pulleys.

13. Install belt on pulleys. Tension belt so it deflects .25" when a force of 1 lb. is applied at mid span of pulleys. Tighten flange head capscrew securing clutch interlock module/bracket assembly and pivot assembly to generator. Tighten pivot assembly to boss of engine.

14. Mount a light bracket on each side of handle with a clamp and two nylon insert locknuts (Fig. 4). Light with On/Off switch to be mounted on left side of handle.

15. Position lights approximately 6" below console.

16. Plug lights into wire harness and route harness to generator bracket.

17. Plug the two male bullet connectors into the leads coming off generator. Place generator wires and clutch interlock switch wires in R−clamp. Place voltage regulator on bottom side of generator bracket. Mount voltage regulator, R−clamp and (2) ground wires to generator bracket with a capscrew, nylon insert locknut and (2) external tooth lockwashers (Fig. 3).

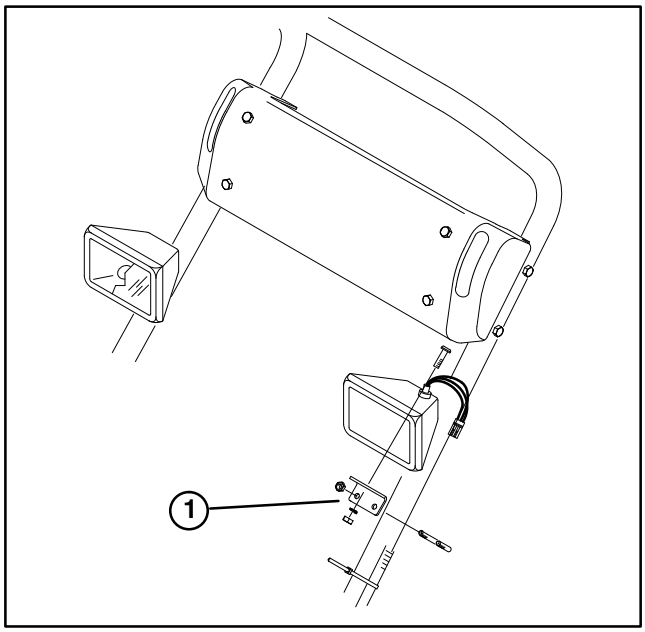

Figure 4
1. Light bracket

18. Secure wire harness to both sides of handle using nylon cable ties. Check all wires for excess bending, chaffing or interference with mounting parts.

19. Mount new V−belt cover and mounting bracket to differential housing with fasteners previously removed (Fig. 5).

20. Tighten retainer securing V−belt cover to mounting bracket

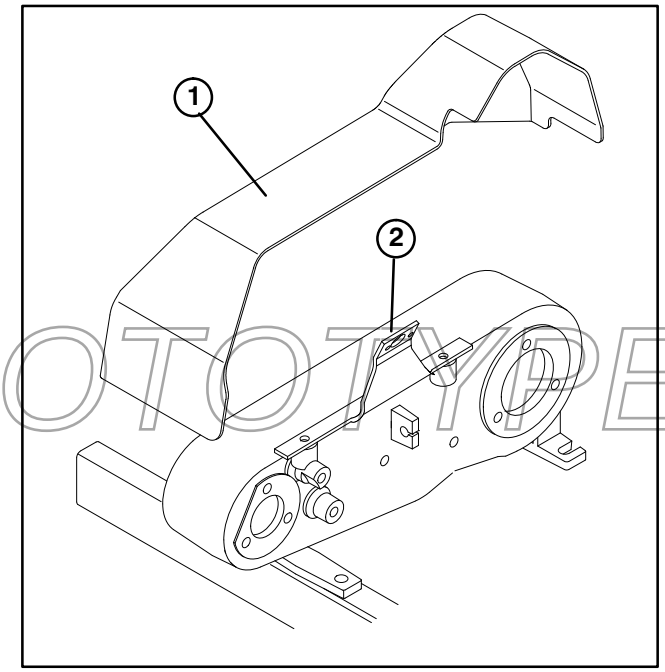

Figure 5
1. V−belt cover
2. Mounting bracket

PROTOTYPE