FORM NO. 3321–651

TORO®

MODEL NO. 59225

PARTS CATALOG

52" RECYCLER® KIT

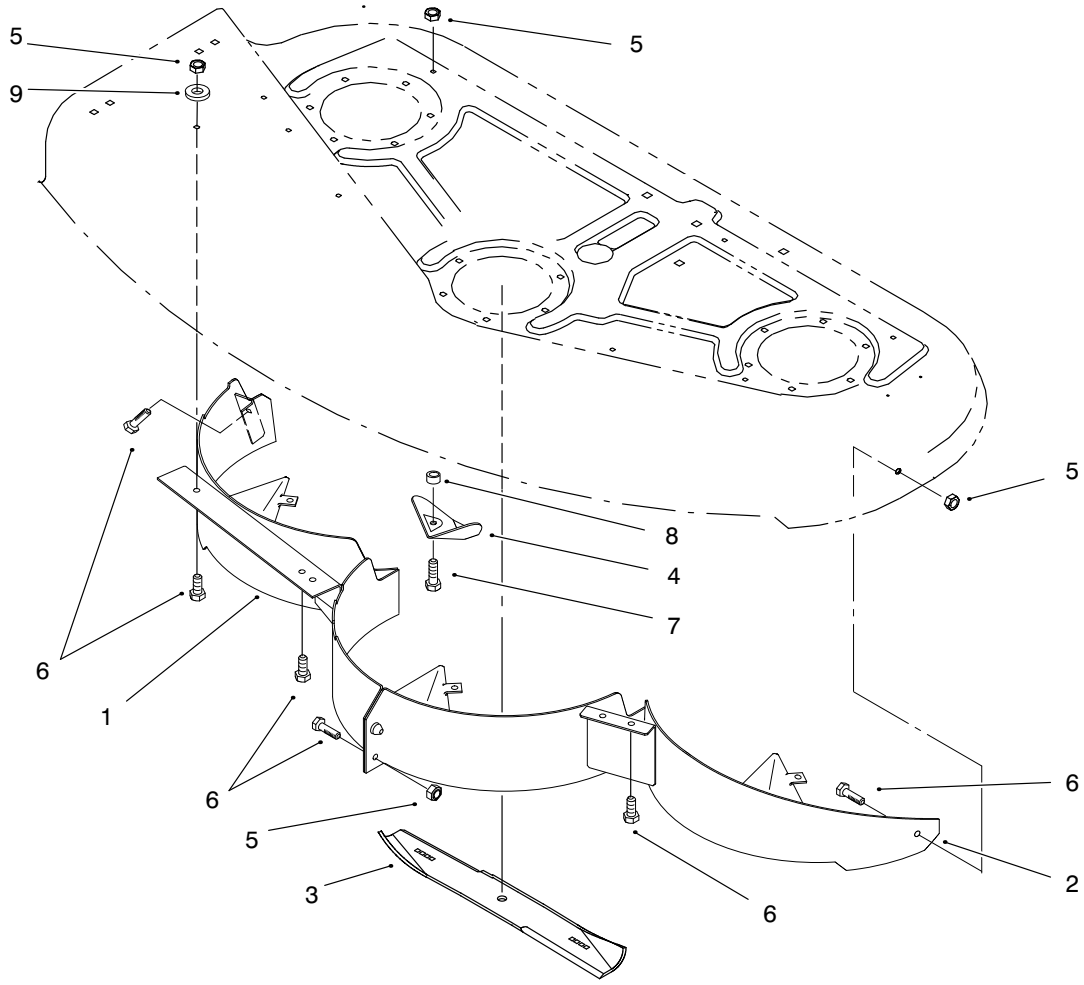

C–2773

RECYCLER ASSEMBLY

Ref. No.	Part No.	Description	No. Used
1	94–2504	Baffle – R.H.	1
2	94–2505	Baffle – L.H.	1
3	92–7961	Blade – Recycler	3
4	84–5760	Plate – Kicker	3
5	3296–29	Nut–Hex Lock	12

Ref. No.	Part No.	Description	No. Used
6	322–2	Screw–HH	9
7	322–5	Screw–HH	3
8	59–4310	Spacer	3
9	3256–23	Washer–Flat	3

© The TORO Company –1998
All Rights Reserved

TPS