Form No. 3408-251 Rev D

White or Red Universal Sunshade

Groundsmaster® and Reelmaster® Traction Units

Model No. 30349

Model No. 30552

Installation Instructions

WARNING

CALIFORNIA
Proposition 65 Warning

This product contains a chemical or chemicals known to the State of California to cause cancer, birth defects, or reproductive harm.

Safety

General

Although hazard control and accident prevention partially depend on the design and configuration of the machine, these factors also depend on the awareness, concern, and proper training of the personnel involved in the operation, transport, maintenance, and storage of the machine. Improperly using or maintaining the machine can result in injury or death. To reduce the potential for injury or death, comply with the following safety instructions.

Before Operating

1. Review and understand the contents of the *Installation Instructions* before installing the sunshade.
2. Keep all shields, safety devices and decals in place. If a shield, safety device or decal is defective, illegible, or damaged, repair or replace it before operating the machine.
3. Do not weld, cut, drill, modify, or remove the roll bar in any matter.
4. Tighten any loose nuts, bolts, or screws to ensure that the machine is in safe operating condition.

While Operating

1. Use extreme care when working close to fences, ditches, or on hillsides.
2. Check carefully for overhead clearances (i.e., branches, doorways, electrical wires) before driving under any objects and do not contact them.
3. Tie down the sunshade frame when transporting the machine.
4. Wear hearing protection when operating any machine with a sunshade.

Maintenance and Service

1. Before servicing or making adjustments, lower the implement, shut off the engine, engage the parking brake, and remove the key.
2. Make sure that the machine is in safe operating condition by keeping all nuts, bolts, and screws tight.
3. When working on the sunshade installation, wear eye protection.
4. Replace a damaged sunshade. Do not repair or revise.
5. When installing the sunshade or performing service, use correct supports, hoists, and jacks. If the sunshade is not properly supported, it may move or fall, which may result in personal injury.
6. To ensure optimum performance and safety, always purchase genuine Toro replacement parts and accessories. Replacement parts and accessories made by other manufacturers could be dangerous. Such use could void the product warranty of The Toro Company.

© 2017—The Toro® Company
8111 Lyndale Avenue South
Bloomington, MN 55420

Register at www.Toro.com.

CE

Original Instructions (EN)
Printed in the USA
All Rights Reserved

3408-251 D

Safety and Instructional Decals

Safety and instruction decals are affixed to your sunshade. If any decal becomes illegible or damaged, install a new decal.



decal98-4387

98-4387

1. Warning—wear hearing protection.

Installation

Loose Parts

Use the chart below to verify that all parts have been shipped.

Description	Qty.	Use
No parts required	–	Prepare the machine.
Frame assembly	1	Install the sunshade on the Groundsmaster 5900 machine.
Left ROPS-mounting bracket	1	
Right ROPS-mounting bracket	1	
Brace	2	
Left brace bracket	1	
Right brace bracket	1	
Left brace bracket	1	
Right brace bracket	1	
Bolt (1/2 x 2-1/2 inches)	4	
Large washer	4	
Flange nut (1/2 inch)	4	
ROPS-mounting bracket	2	
U-bolt (4 inches)	6	
Flange nut (3/8 inch)	12	
Sunshade	1	
Flange-head bolt (5/16 x 1-1/4 inches)	4	
Small washer	8	
Frame-alignment bar	1	
Bolt (3/4 x 4 inches)	2	Install the sunshade on the Groundsmaster 3280 machine.
Nut (3/4 inch)	2	
Washer (13/16 x 1-1/2 inches)	4	
Left ROPS-mounting bracket	1	
Right ROPS-mounting bracket	1	
Brace	2	
Left brace bracket	1	
Right brace bracket	1	
Bolt (1/2 x 2-1/2 inches)	4	
Large washer	4	
Flange nut (1/2 inch)	4	
U-bolt (2-3/4 inch)	6	
Flange nut (3/8 inch)	12	
Sunshade	1	
Flange-head bolt (5/16 x 1-1/4 inches)	4	
Small washer	8	
Frame-alignment bar	1	

Description	Qty.	Use
Bolt (3/4 x 4 inches)	2	Install the sunshade on the Groundsmaster 360 or 7200 machines.
Nut (3/4 inch)	2	
Washer (13/16 x 1-1/2 inches)	4	
Frame assembly	1	
Left ROPS-mounting bracket	1	
Right ROPS-mounting bracket	1	
Brace	2	
Left brace bracket	1	
Right brace bracket	1	
Bolt (1/2 x 2-1/2 inches)	4	
Large washer	4	
Flange nut (1/2 inch)	4	
ROPS-mounting brackets	2	
U-bolt (2-3/4 inch)	6	
Flange nut (3/8 inch)	12	
Sunshade	1	
Flange-head bolt (5/16 x 1-1/4 inches)	4	
Small washer	8	
Frame-alignment bar	1	
Bolt (3/4 x 4 inches)	2	Install the sunshade on the Groundsmaster 4000 machine or Reelmaster 3555 and 3575 machines.
Nut (3/4 inch)	2	
Washer (13/16 x 1-1/2 inches)	4	
Frame assembly	1	
Left ROPS-mounting bracket	1	
Right ROPS-mounting bracket	1	
Brace	2	
Left brace bracket	1	
Right brace bracket	1	
Bolt (1/2 x 2-1/2 inches)	4	
Large washer	4	
Flange nut (1/2 inch)	4	
ROPS-mounting brackets	2	
U-bolt (2-3/4 inch)	4	
U-bolt (4 inches)	2	
Flange nut (3/8 inch)	12	
Sunshade	1	
Flange-head bolt (5/16 x 1-1/4 inches)	2	
Flange-head bolt (5/16 x 2-1/4 inches)	4	
Small washer	8	
Spacer	4	
Frame-alignment bar	1	

Description	Qty.	Use
Bolt (3/4 x 4 inches)	2	Install the sunshade on the Groundsmaster 4500 and 4700 machines or Reelmaster 6700 and 7000 machines.
Nut (3/4 inch)	2	
Washer (13/16 x 1-1/2 inches)	4	
Frame assembly	1	
Left ROPS-mounting bracket	1	
Right ROPS-mounting bracket	1	
Left ROPS-mounting bracket (from kit 136-1830)	1	
Right ROPS-mounting bracket (from kit 136-1830)	1	
Brace	2	
Left brace bracket	1	
Right brace bracket	1	
Bolt (1/2 x 2-1/2 inches)	4	
Large washer	4	
Flange nut (1/2 inch)	4	
ROPS-mounting brackets	2	
U-bolt (2-3/4 inch)	4	
U-bolt (4 inches)	2	
U-bolt (3-1/2 x 5 inches—from kit 136-1830)	4	
U-bolt (4-1/2 x 3 inches—from kit 136-1830)	4	
Flange nut (3/8 inch)	12	
Sunshade	1	
Flange-head bolt (5/16 x 1-1/4 inches)	4	
Small washer	8	
Frame-alignment bar	1	
Frame assembly	1	Install the sunshade on the Reelmaster 5010 machine or Groundsmaster 4300 machine.
Left ROPS-mounting bracket	1	
Right ROPS-mounting bracket	1	
Brace	2	
Left brace bracket	1	
Right brace bracket	1	
Bolt (1/2 x 2-1/2 inches)	4	
Large washer	4	
Flange nut (1/2 inch)	4	
ROPS-mounting brackets	2	
U-bolt (2-3/4 inch)	6	
Flange nut (3/8 inch)	12	
Sunshade	1	
Flange-head bolt (5/16 x 1-1/4 inches)	4	
Small washer	8	
Frame-alignment bar	1	

Description	Qty.	Use
Frame assembly	1	Install the sunshade on the Reelmaster 3100 and 3550 machines or Groundsmaster 3500 and 3505 machines.
Left ROPS-mounting bracket	1	
Right ROPS-mounting bracket	1	
Brace	2	
Left brace bracket	1	
Right brace bracket	1	
Bolt (1/2 x 2-1/2 inches)	4	
Large washer	4	
Flange nut (1/2 inch)	4	
U-bolt (2-3/4 inch)	4	
Flange nut (3/8 inch)	12	
Sunshade	1	
Flange-head bolt (5/16 x 1-1/4 inches)	4	
Small washer	8	
Frame-alignment bar	1	
U-bolt (4 inches)	2	

Preparing the Machine

1. Park the machine on a level surface.
2. Lower the cutting units and engage the parking brake.
3. Shut off the engine and remove the key.

Installing the Sunshade

Groundsmaster 5900 Machine

1. To properly align the frame, attach the frame-alignment bar to the mounting tabs on the rear of the sunshade frame with 2 flange-head bolts (5/16 x 1-1/4 inches) as shown in Figure 1.

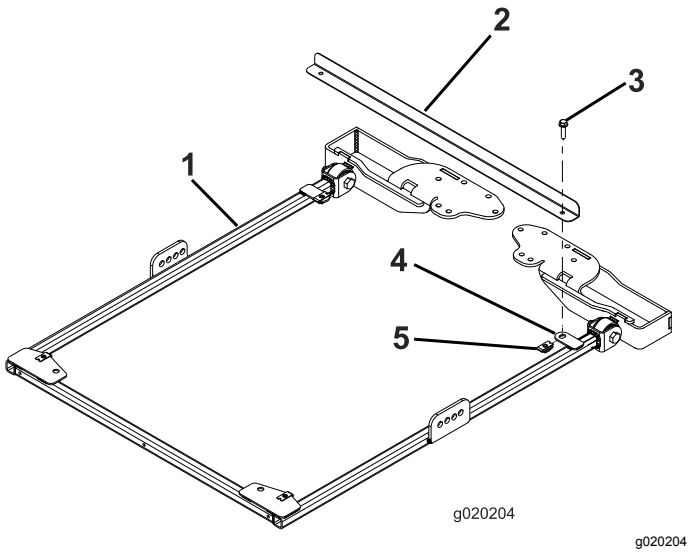

Figure 1

1. Sunshade frame
2. Frame-alignment bar
3. Flange-head bolt (5/16 x 1-1/4 inches)
4. Mounting tab
5. Retainer nut

2. On each side of the sunshade frame, loosely mount a brace to the second hole of the brace bracket with a bolt (1/2 x 2-1/2 inches), washer (1/2 inch), and flange nut (1/2 inch) as shown in Figure 2.

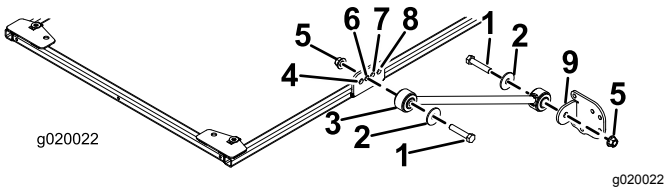

Figure 2

1. Bolt (1/2 x 2-1/2 inches)
2. Washer (1/2 inch)
3. Brace
4. Front hole
5. Flange nut (1/2 inch)
6. Second hole
7. Third hole
8. Rear hole
9. Brace bracket

3. Loosely install a brace bracket to each brace with a bolt (1/2 x 2-1/2 inches), washer (1/2 inch), and flange nut (1/2 inch) as shown in Figure 2.

4. Position the ROPS-mounting brackets onto the top of the traction unit roll bar (Figure 3).

   Note: Make sure that the roll bar is centered in the mounting brackets.

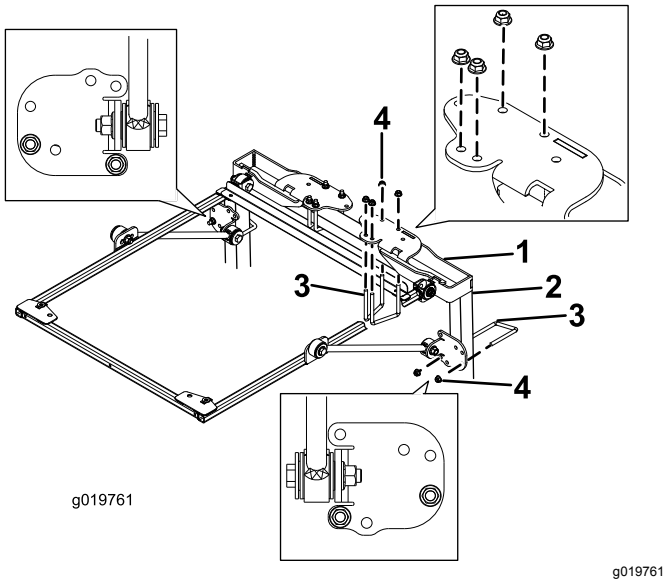

Figure 3

1. ROPS-mounting bracket
2. Roll bar post
3. U-bolt (4 inches)
4. Flange nut (3/8 inch)

5. Using the mounting holes shown in Figure 3, mount each ROPS-mounting bracket to the top of the roll bar with 2 U-bolts (4 inches) and 4 flange nuts.
6. Using the mounting holes shown in Figure 3, loosely secure each of the brace brackets to the roll bar posts with a U-bolt (4 inches) and 2 flange nuts.
7. Move the brace bracket up or down, on the vertical roll bar posts, until the sunshade frame is level to the floor.

   Note: Use a level to make sure that the frame is level to the ground.

   Note: Use the front or rear mounting holes in the brace bracket, if you need more adjustability.
8. Tighten the U-bolt flange nuts, securing the mounting brackets to the posts.
9. Tighten all the remaining flange nuts as follows:
   - Torque the flange nuts (3/8 inch) 41 to 55 N·m (34 to 41 ft-lb).
   - Torque the flange nuts (1/2 inch) 113 to 141 N·m (84 to 104 ft-lb).
10. Remove the flange-head bolts securing the frame-alignment bar to the frame and remove the alignment bar. Retain the bolts for mounting the sunshade.

11. While aligning the mounting holes, position the sunshade onto the frame as shown in Figure 4.

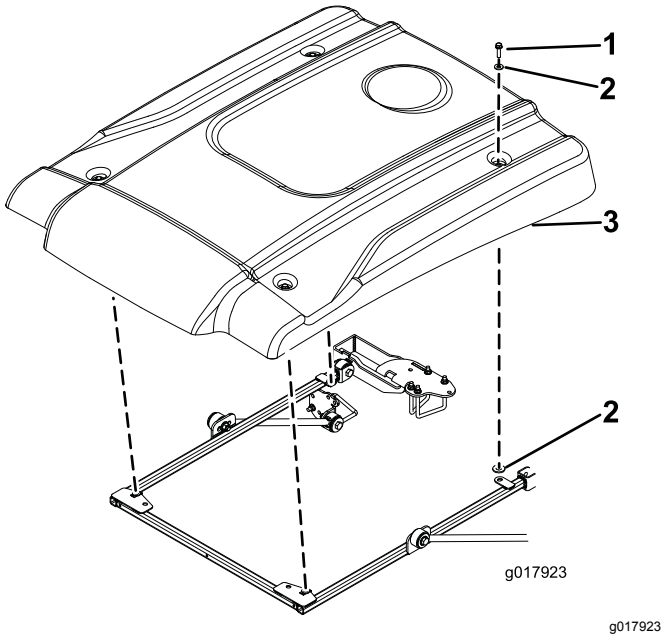

g017923

Figure 4

1. Flange-head bolt (5/16 x 1-1/4 inches)
2. Small washer
3. Sunshade

12. Loosely mount each corner of the sunshade to the frame with a flange-head bolt (5/16 x 1-1/4 inches) and 2 small washers (Figure 4).

    Note: Position a washer on each side of the sunshade-rubber grommet.

13. Tighten the sunshade-mounting bolts 5 to 6 N·m (45 to 55 in-lb).

    Important: **Do not overtighten the mounting bolts as the sunshade may crack.**

Installing the Sunshade

Groundsmaster 3280 Machine

1. To properly align the frame, attach the frame-alignment bar to the mounting tabs on the rear of the sunshade frame with 2 flange-head bolts (5/16 x 1-1/4 inches) as shown in Figure 5.

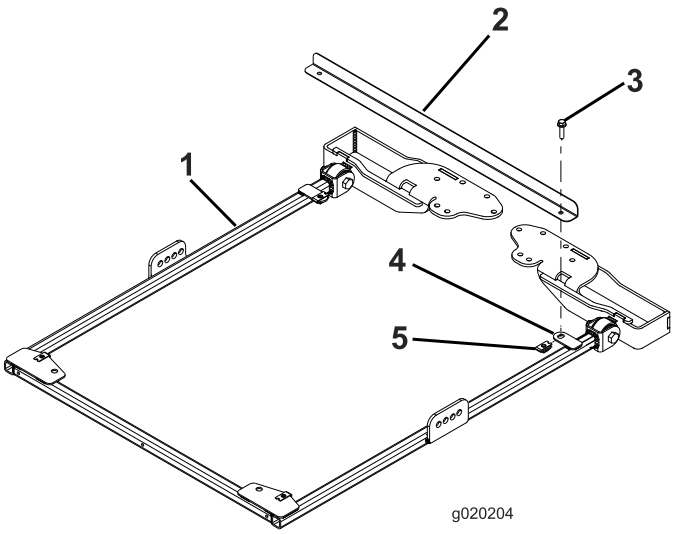

g020204

Figure 5

1. Sunshade frame
2. Frame-alignment bar
3. Flange-head bolt (5/16 x 1-1/4 inches)
4. Mounting tab
5. Retainer nut

2. With the roll bar in the raised position, remove the hairpin cotters and the 2 pins (Figure 6).

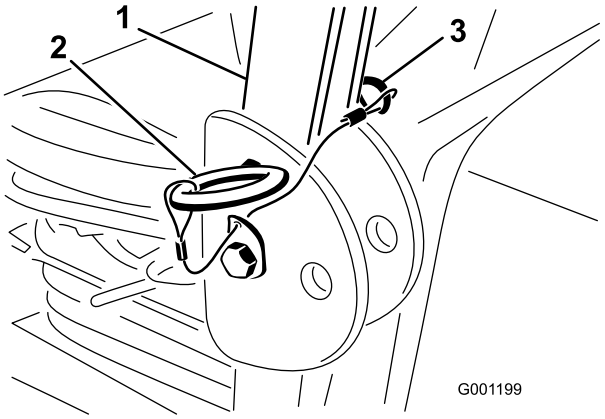

g001199

Figure 6

1. Roll bar
2. Pin
3. Hairpin cotter

3. Insert a washer (13/16 x 1-1/2 inches) onto each bolt (3/4 x 4 inches) as shown in Figure 7.

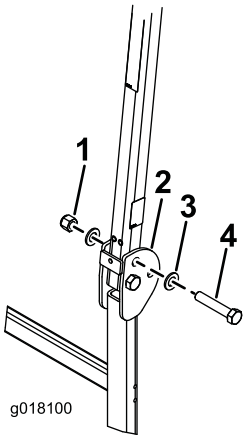

g018100

Figure 7

1. Nut (3/4 inch)
2. Roll bar
3. Washer (13/16 x 1-1/2 inches)
4. Bolt (3/4 x 4 inches)

4. In the holes where the pins were removed, install the bolts and washers (Figure 7).
5. Install another washer onto each bolt and secure with nuts (3/4 inch) as shown in Figure 7. Torque the nuts 323 to 396 N·m (238 to 292 ft-lb).
6. Torque the ROPS pivot bolt (Figure 7) 91 to 113 N·m (67 to 83 ft-lb) to avoid any bouncing of the roll bar and sunshade.
7. On each side of the sunshade frame, loosely mount a brace to the second hole of the brace bracket with a bolt (1/2 x 2-1/2 inches), washer (1/2 inch), and flange nut (1/2 inch) as shown in Figure 8.

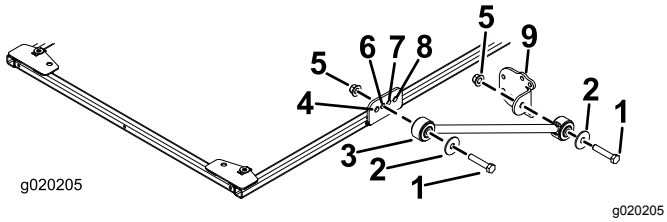

g020205

Figure 8

1. Bolt (1/2 x 2-1/2 inches)
2. Washer (1/2 inch)
3. Brace
4. Front hole
5. Flange nut (1/2 inch)
6. Second hole
7. Third hole
8. Rear hole
9. Brace bracket

8. Loosely install a brace bracket to each brace with a bolt (1/2 x 2-1/2 inches), washer (1/2 inch), and flange nut (1/2 inch) as shown in Figure 8.
9. Position the ROPS-mounting brackets onto the top of the traction unit roll bar (Figure 9).

   Note: Make sure that the roll bar is centered in the ROPS-mounting brackets.

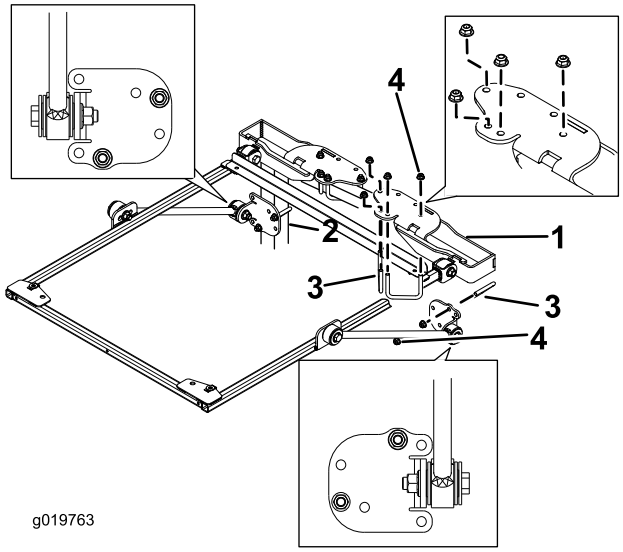

g019763

Figure 9

1. ROPS-mounting bracket
2. Roll bar post
3. U-bolt (2-3/4 inch)
4. Flange nut (3/8 inch)

10. Using the mounting holes shown in Figure 9, mount each ROPS-mounting bracket to the top of the roll bar with 2 U-bolts (2-3/4 inch) and 4 flange nuts.
11. Using the mounting holes shown in Figure 9, loosely secure each of the brace bracket to the roll bar posts with a U-bolt (2-3/4 inch) and 2 flange nuts.
12. Move the brace bracket up or down, on the vertical roll bar posts, until the sunshade frame is level to the ground. Then, tighten the U-bolt flange nuts, securing the mounting brackets to the posts.

    Note: Use a level to make sure that the frame is level to the ground.

    Note: Use the front or rear mounting holes, in the brace bracket, if more adjustability is required.
13. Tighten all the remaining flange nuts as follows:
    - Torque the flange nuts (3/8 inch) 41 to 55 N·m (34 to 41 ft-lb).
    - Torque the flange nuts (1/2 inch) 113 to 141 N·m (84 to 104 ft-lb).
14. Remove the flange-head bolts securing the frame-alignment bar to the frame and remove the alignment bar. Retain the bolts for mounting the sunshade.

15. While aligning the mounting holes, position the sunshade onto the frame as shown in Figure 10.

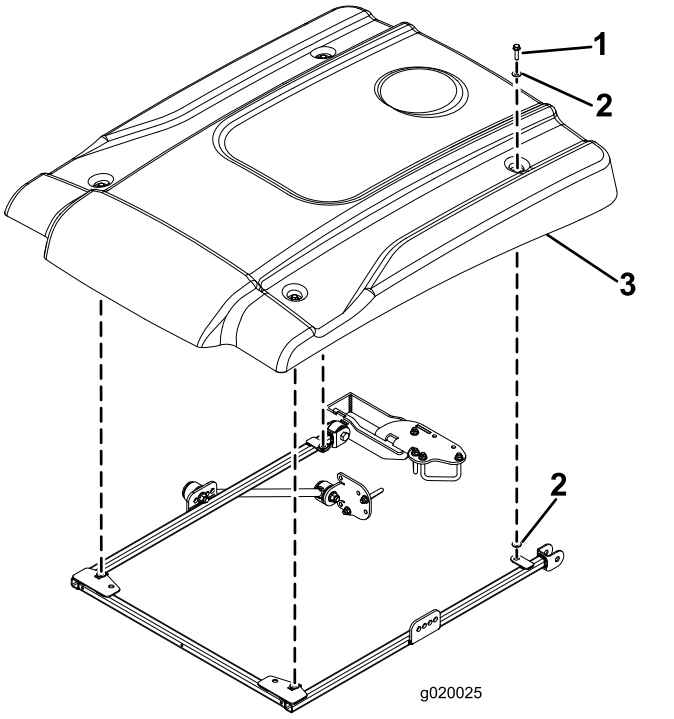

g020025

Figure 10

1. Flange-head bolt (5/16 x 1-1/4 inches)
2. Small washer
3. Sunshade

16. Loosely mount each corner of the sunshade to the frame with a flange-head bolt (5/16 x 1-1/4 inches) and 2 small washers (Figure 10). Position a washer on each side of the sunshade rubber grommet.
17. Tighten the sunshade-mounting bolts 5 to 6 N·m (45 to 55 in-lb).

Important: **Do not overtighten the mounting bolts as the sunshade may crack.**

Installing the Sunshade

Groundsmaster 360 or 7200 Machines

1. To properly align the frame, attach the frame-alignment bar to the mounting tabs on the rear of the sunshade frame with 2 flange-head bolts (5/16 x 1-1/4 inches) as shown in Figure 11.

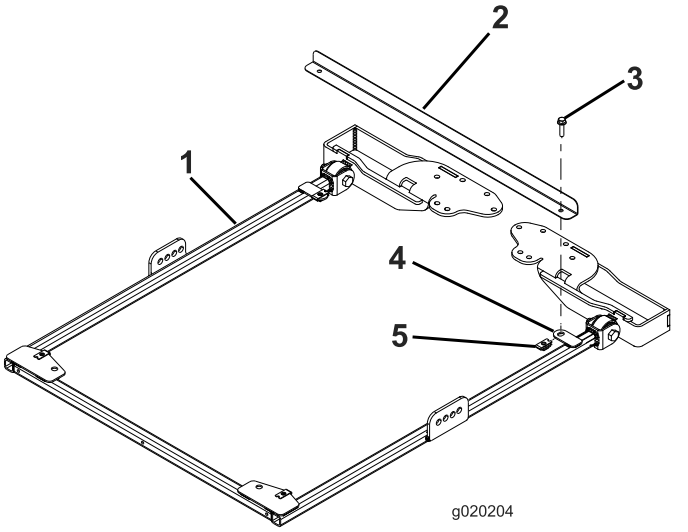

g020204

Figure 11

1. Sunshade frame
2. Frame-alignment bar
3. Flange-head bolt (5/16 x 1-1/4 inches)
4. Mounting tab
5. Retainer nut

2. With the roll bar in the raised position, remove the hairpin cotters and the 2 pins (Figure 12).

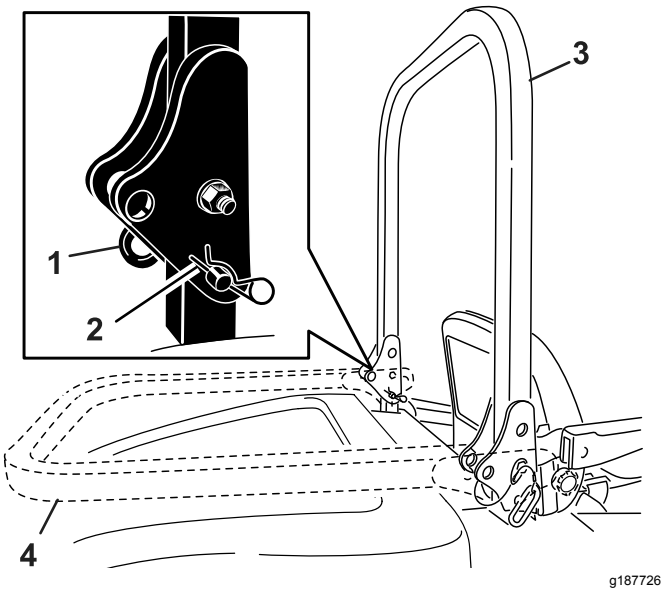

Figure 12

1. Pin
2. Hairpin cotter
3. Roll bar (raised position)
4. Roll bar (lowered position)

3. Insert a washer (13/16 x 1-1/2 inches) onto each bolt (3/4 x 4 inches) as shown in Figure 13.

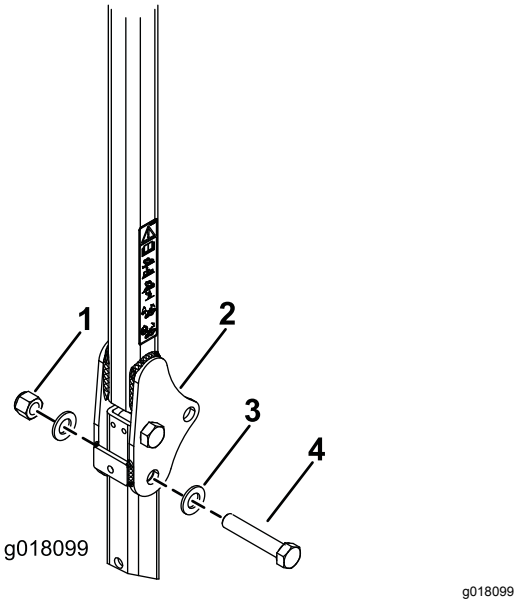

Figure 13

1. Nut (3/4 inch)
2. Roll bar
3. Washer (13/16 x 1-1/2 inches)
4. Bolt (3/4 x 4 inches)

4. In the holes where the pins were removed, install the bolts and washers (Figure 13).
5. Install another washer onto each bolt and secure with nuts (3/4 inch) as shown in Figure 13. Torque the nuts 323 to 396 N·m (238 to 292 ft-lb).
6. Torque the ROPS pivot bolt (Figure 13) 91 to 113 N·m (67 to 83 ft-lb) to avoid any bouncing of the roll bar and sunshade.
7. On each side of the sunshade frame, loosely mount a brace to the second hole of the brace bracket with a bolt (1/2 x 2-1/2 inches), washer (1/2 inch), and flange nut (1/2 inch) as shown in Figure 14.

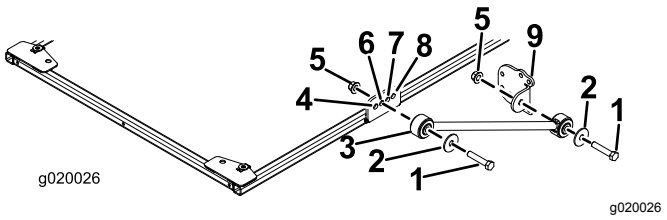

Figure 14

1. Bolt (1/2 x 2-1/2 inches)
2. Washer (1/2 inch)
3. Brace
4. Front hole
5. Flange nut (1/2 inch)
6. Second hole
7. Third hole
8. Rear hole
9. Brace bracket

8. Loosely install a brace bracket to each brace with a bolt (1/2 x 2-1/2 inches), washer (1/2 inch), and flange nut (1/2 inch) as shown in Figure 14.
9. Position the ROPS-mounting brackets onto the top of the traction unit roll bar (Figure 15).

   Note: Make sure that the roll bar is centered in the ROPS-mounting brackets.

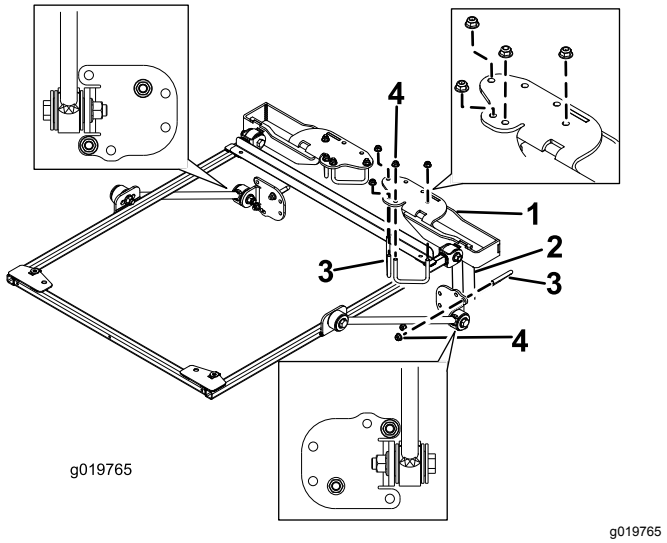

Figure 15

1. ROPS-mounting bracket
2. Roll bar post
3. U-bolt (2-3/4 inch)
4. Flange nut (3/8 inch)

10. Using the mounting holes shown in Figure 15, mount each bracket to the top of the roll bar with 2 U-bolts (2-3/4 inch) and 4 flange nuts.

11. Using the mounting holes shown in Figure 15, loosely secure each of the brace brackets to the roll bar posts with a U-bolt (2-3/4 inch) and 2 flange nuts.
12. Move the brace bracket up or down, on the vertical roll bar posts, until the sunshade frame is level to the floor. Use a level to make sure that the frame is level to the ground. Then, tighten the U-bolt flange nuts, securing the mounting brackets to the posts.

    Note: Use the front or rear mounting holes, in the brace bracket, if more adjustability is required.
13. Tighten all the remaining flange nuts as follows:
    - Torque the flange nuts (3/8 inch) 41 to 55 N·m (34 to 41 ft-lb).
    - Torque the flange nuts (1/2 inch) 113 to 141 N·m (84 to 104 ft-lb).
14. Remove the flange-head bolts securing the frame-alignment bar to the frame and remove the alignment bar. Retain the bolts for mounting the sunshade.
15. While aligning the mounting holes, position the sunshade onto the frame as shown in Figure 16.

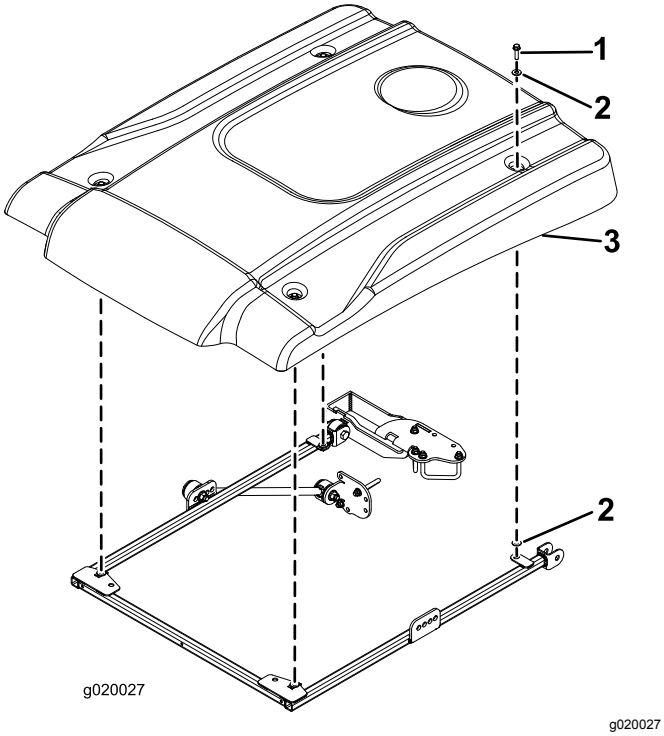

Figure 16

1. Flange-head bolt (5/16 x 1-1/4 inches)
2. Small washer
3. Sunshade

16. Loosely mount each corner of the sunshade to the frame with a flange-head bolt (5/16 x 1-1/4 inches) and 2 small washers (Figure 16). Position a washer on each side of the sunshade rubber grommet.
17. Tighten the sunshade-mounting bolts 5 to 6 N·m (45 to 55 in-lb).

    Important: **Do not overtighten the mounting bolts as the sunshade may crack.**

Installing the Sunshade

Groundsmaster 4000 Machine or Reelmaster 3555 and 3575 Machines

1. To properly align the frame, attach the frame-alignment bar to the mounting tabs on the rear of the sunshade frame with 2 flange-head bolts (5/16 x 1-1/4 inches) as shown in Figure 17.

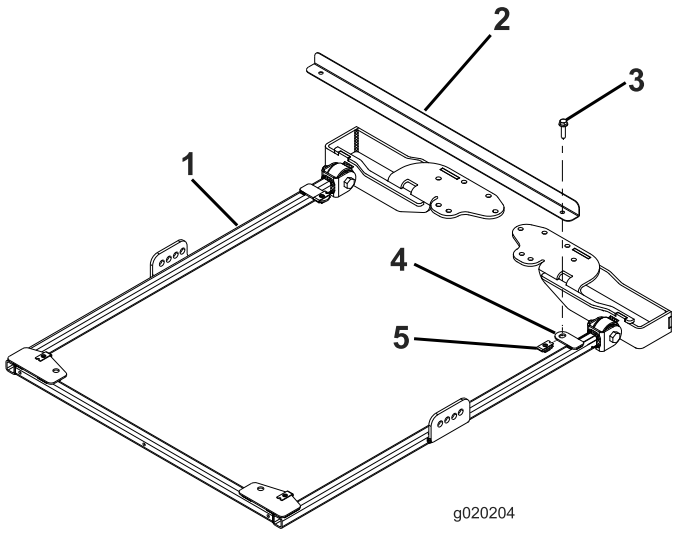

g020204

Figure 17

1. Sunshade frame
2. Frame-alignment bar
3. Flange-head bolt (5/16 x 1-1/4 inches)
4. Mounting tab
5. Retainer nut

2. For Models 03820 and 03821, skip to step 7. For all other models, with the roll bar in the raised position, remove the hairpin cotters and the 2 pins (Figure 18).

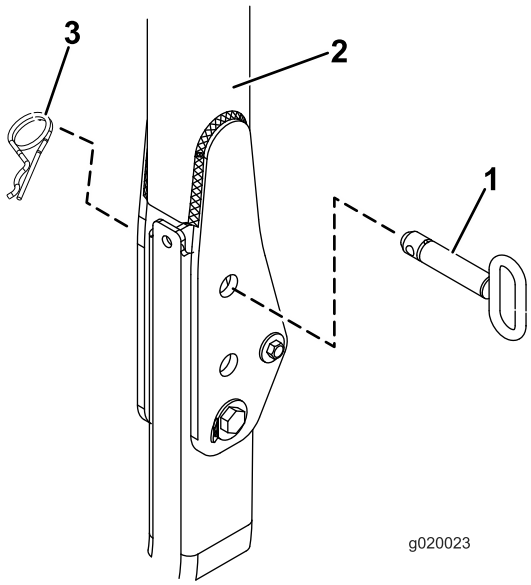

g020023

Figure 18

1. Pin
2. Roll bar
3. Hairpin cotter

3. Insert a washer (13/16 x 1-1/2 inches) onto each bolt (3/4 x 4 inches) as shown in Figure 19.

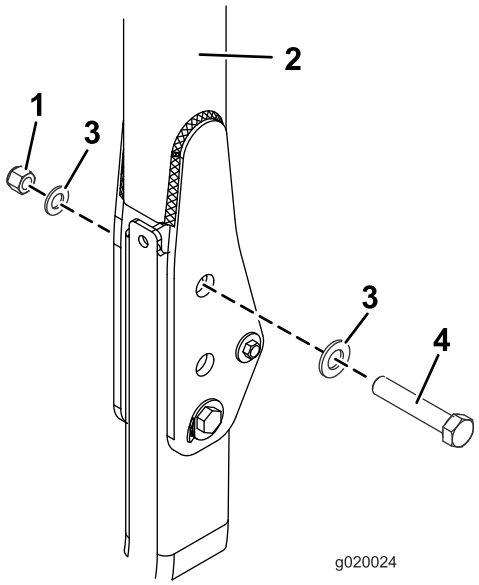

g020024

Figure 19

1. Nut (3/4 inch)
2. Roll bar
3. Washer (13/16 x 1-1/2 inches)
4. Bolt (3/4 x 4 inches)

4. In the holes where the pins were removed, install the bolts and washers (Figure 19).
5. Install another washer onto each bolt and secure with nut (3/4 inch) as shown in (Figure 19). Torque the nuts 323 to 396 N·m (238 to 292 ft-lb).

6. Torque the ROPS pivot bolt (Figure 19) 91 to 113 N·m (67 to 83 ft-lb) to avoid any bouncing of the roll bar and sunshade.
7. On each side of the sunshade frame, loosely mount a brace to the brace bracket as follows:
   - For Models 03820, 03821, 30604, 30605, 30608, and 30609 on each side of the sunshade frame, loosely mount a brace to the **rear** hole of the brace bracket with a bolt (1/2 x 2-1/2 inches), washer (1/2 inch) washer, and flange nut (1/2 inch) as shown in Figure 20.
   - For Models 30446, 30446N, 30447, and 30447N, on each side of the sunshade frame, loosely mount a brace to the **second** hole of the brace bracket with a bolt (1/2 x 2-1/2 inches), washer (1/2 inch), and flange nut (1/2 inch) as shown in Figure 21.

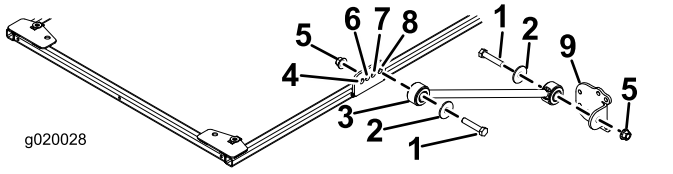

Figure 20

Models 03820, 03821, 30604, 30605, 30608, and 30609

1. Bolt (1/2 x 2-1/2 inches)
2. Washer (1/2 inch)
3. Brace
4. Front hole
5. Flange nut (1/2 inch)
6. Second hole
7. Third hole
8. Rear hole
9. Brace bracket

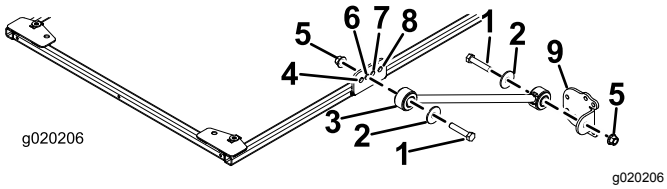

Figure 21

Models 30446, 30446N, 30447, and 30447N

1. Bolt (1/2 x 2-1/2 inches)
2. Washer (1/2 inch)
3. Brace
4. Front hole
5. Flange nut (1/2 inch)
6. Second hole
7. Third hole
8. Rear hole
9. Brace bracket

8. Loosely install a brace bracket to each brace with a bolt (1/2 x 2-1/2 inches), washer (1/2 inch), and flange nut (1/2 inch) as shown in Figure 20.
9. Position the ROPS-mounting brackets onto the top of the traction unit roll bar (Figure 22). Make sure that the roll bar is centered in the ROPS-mounting brackets.

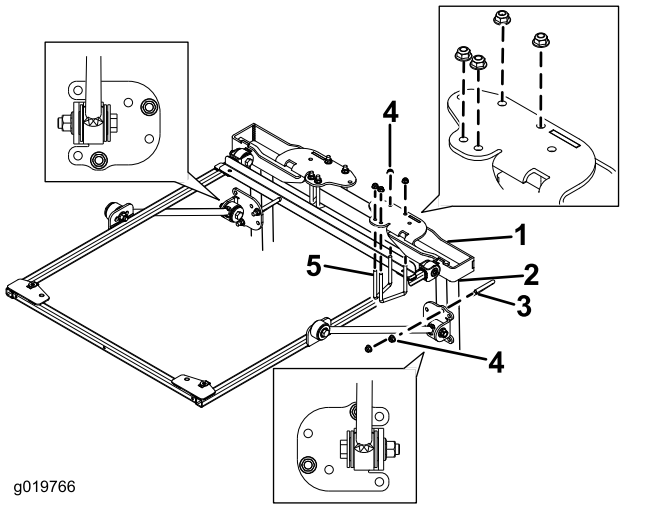

Figure 22

1. ROPS-mounting bracket
2. Roll bar post
3. U-bolt (4 inches)
4. Flange nut (3/8 inch)
5. U-bolt (2-3/4 inch)

10. Using the mounting holes shown in Figure 22, ROPS-mounting brackets to the top of the roll bar with 2 U-bolts (2-3/4 inch) and 4 flange nuts.
11. Using the mounting holes shown in Figure 22, loosely secure each of the brace brackets to the roll bar posts with a U-bolt (4 inches) and 2 flange nuts.
12. Move the brace bracket up or down, on the vertical roll bar posts, until the sunshade frame is level to the floor.

    Note: Use a level to make sure that the frame is level to the ground.

    Note: Use the front mounting holes in the brace bracket, if you need more adjustability.
13. Tighten the U-bolt flange nuts, securing the mounting brackets to the posts.
14. Tighten all the remaining flange nuts as follows:
    - Torque the flange nuts (3/8 inch) 41 to 55 N·m (34 to 41 ft-lb).
    - Torque the flange nuts (1/2 inch) 113 to 141 N·m (84 to 104 ft-lb).
15. Remove the flange-head bolts securing the frame-alignment bar to the frame and remove the alignment bar.
16. While aligning the mounting holes, position the sunshade onto the frame as shown in Figure 23.

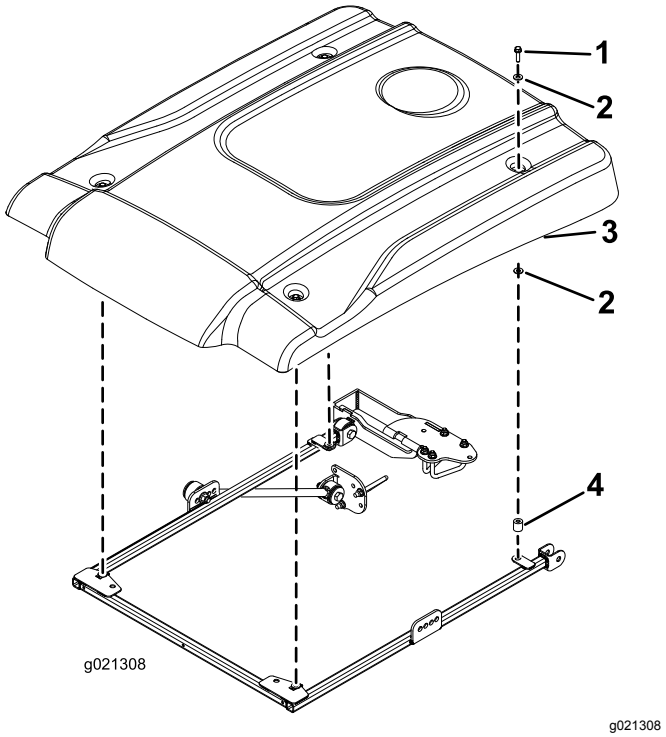

Figure 23

1. Flange-head bolt (5/16 x 2-1/4 inches)
2. Small washer
3. Sunshade
4. Spacer

17. Loosely mount each corner of the sunshade to the frame with a flange-head bolt (5/16 x 2-1/4 inches), 2 small washers, and a spacer (Figure 23). Position a washer on each side of the sunshade-rubber grommet. Position the spacer between the bottom small washer and the frame.
18. Tighten the sunshade-mounting bolts to 5 to 6 N·m (45 to 55 in-lb).

    Important: **Do not overtighten the mounting bolts as the sunshade may crack.**

Installing the Sunshade

Groundsmaster 4500 and 4700 Machines or Reelmaster 6700 and 7000 Machines

Important: **Installation kit (Part No. 136-1830) is required for Groundsmaster 4500 and 4700 with serial number 400000001 and higher.**

1. To properly align the frame, attach the frame-alignment bar to the mounting tabs on the rear of the sunshade frame with 2 flange-head bolts (5/16 x 1-1/4 inches) as shown in Figure 24.

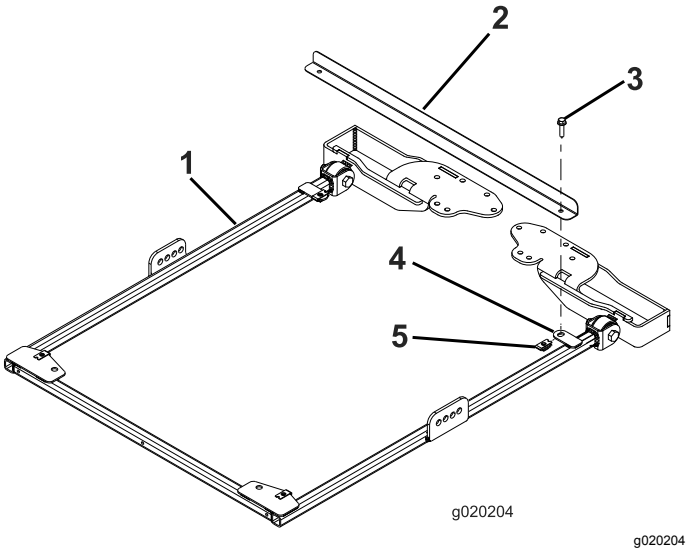

Figure 24

1. Sunshade frame
2. Frame-alignment bar
3. Flange-head bolt (5/16 x 1-1/4 inches)
4. Mounting tab
5. Retainer nut

2. For Groundsmaster 4500 and 4700 machines with serial number 400000001 and higher, continue as follows; for all other machines, proceed to step 3.

   A. With the roll bar in the raised position, remove the hairpin cotter and pin

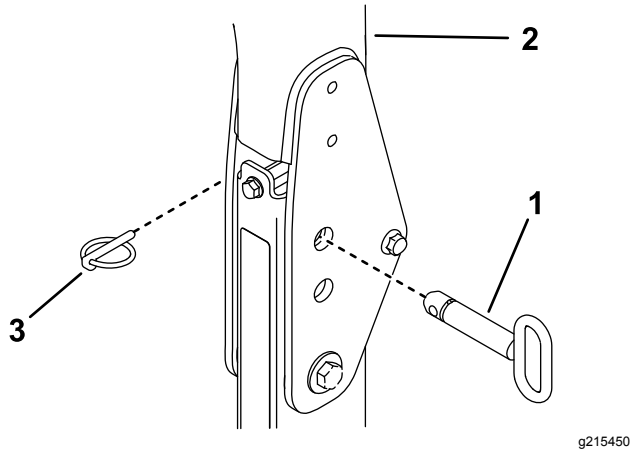

Figure 25

1. Hairpin cotter
2. Roll bar
3. Pin

B. Insert a washer (13/16 x 1-1/2 inches) onto each bolt (3/4 x 4 inches) as shown in Figure 26.

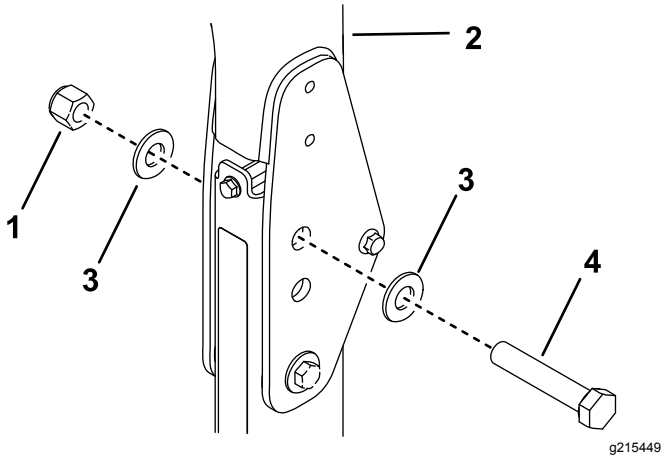

Figure 26

1. Nut (3/4 inch)
2. Roll bar
3. Washer (13/16 x 1-1/2 inches)
4. Bolt (3/4 x 4 inches)

C. In the holes where the pins were removed, install the bolts and washers (Figure 26).

D. Install another washer onto each bolt and secure with nut (3/4 inch) as shown in Figure 26.

E. Torque the ROPS pivot bolt to 91 to 113 N·m (67 to 83 ft-lb) to avoid any bouncing of the roll bar and sunshade.

3. On each side of the sunshade frame, loosely mount a brace to the second hole of the brace bracket with a bolt (1/2 x 2-1/2 inches), washer (1/2 inch), and flange nut (1/2 inch) as shown in Figure 27.

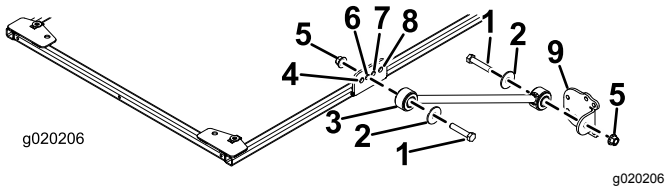

Figure 27

1. Bolt (1/2 x 2-1/2 inches)
2. Washer (1/2 inch)
3. Brace
4. Front hole
5. Flange nut (1/2 inch)
6. Second hole
7. Third hole
8. Rear hole
9. Brace bracket

4. Loosely install a brace bracket to each brace with a bolt (1/2 x 2-1/2 inches), washer (1/2 inch), and flange nut (1/2 inch) as shown in Figure 27.
5. Position the ROPS-mounting brackets onto the top of the traction unit roll bar (Figure 28). Ensure that the roll bar is centered in the ROPS-mounting brackets.

   Note: Use the ROPS-mounting bracket from the installation kit (Part No. 136-1830) for Groundsmaster 4500 and 4700 machines with serial number 400000001 and higher.

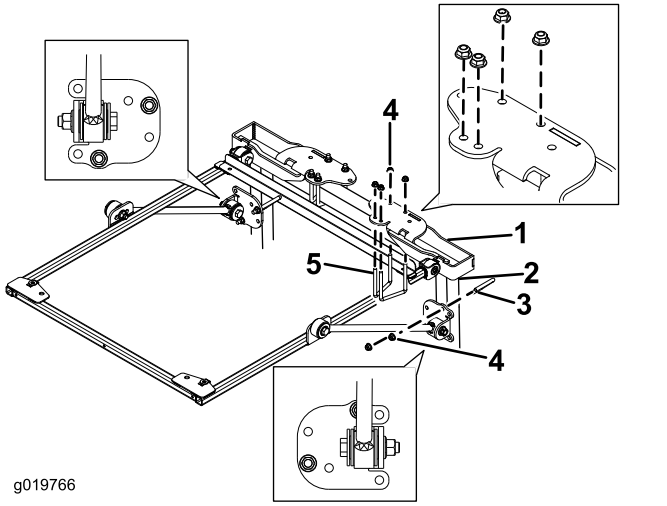

Figure 28

1. ROPS-mounting bracket
2. Roll bar post
3. U-bolt (4 inches)
4. Flange nut (3/8 inch)
5. U-bolt (2-3/4 inch)

6. Using the mounting holes shown in Figure 28, mount each ROPS-mounting bracket to the top of the roll bar with 2 U-bolts (2-3/4 inch) and 4 flange nuts.

   Note: Use the U-bolt (3-1/2 x 5 inches) from the installation kit (Part No. 136-1830) for Groundsmaster 4500 and 4700 machines with serial number 400000001 and higher.

7. Using the mounting holes shown in Figure 28, loosely secure each of the brace brackets to the roll bar posts with a U-bolt (4 inches) and 2 flange nuts.

   Note: Use the U-bolt (4-1/2 x 3 inches) from the installation kit (Part No. 136-1830) for Groundsmaster 4500 and 4700 machines with serial number 400000001 and higher.

8. Move the brace bracket up or down, on the vertical roll bar posts, until the sunshade frame is level to the floor.

   Note: Use a level to make sure that the frame is level to the ground.

   Note: Use the front or rear mounting holes in the brace bracket, if you need more adjustability.

9. Tighten the U-bolt flange nuts, securing the mounting brackets to the posts.

10. Tighten all the remaining flange nuts as follows:

    - Torque the flange nuts (3/8 inch) 41 to 55 N·m (34 to 41 ft-lb).
    - Torque the flange nuts (1/2 inch) 113 to 141 N·m (84 to 104 ft-lb).

11. Remove the flange-head bolts securing the frame-alignment bar to the frame and remove the alignment bar. Retain the bolts for mounting the sunshade.

12. While aligning the mounting holes, position the sunshade onto the frame as shown in Figure 29.

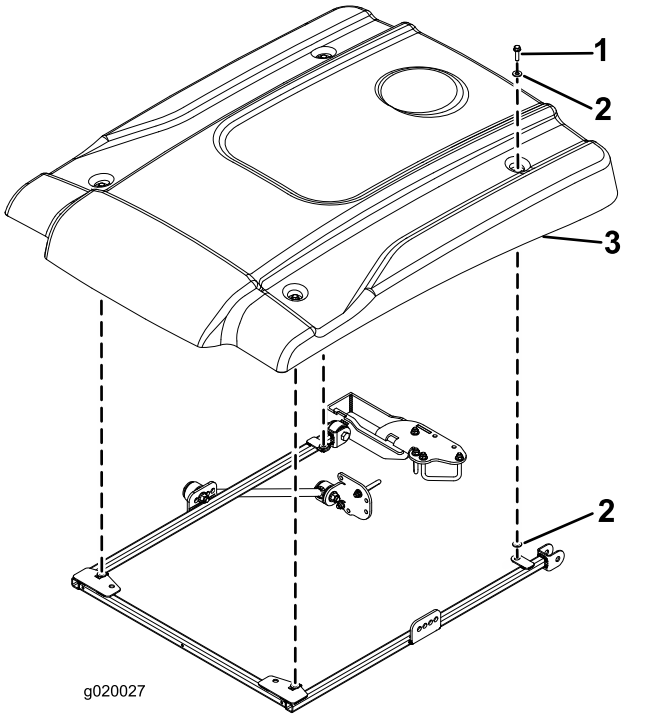

Figure 29

1. Flange-head bolt (5/16 x 2-1/4 inches)
2. Small washer
3. Sunshade

13. Loosely mount each corner of the sunshade to the frame with a flange-head bolt (5/16 x 2-1/4 inches), and 2 small washers (Figure 29). Position a washer on each side of the sunshade rubber grommet.

14. Tighten the sunshade-mounting bolts to 5 to 6 N·m (45 to 55 in-lb).

    Important: **Do not overtighten the mounting bolts as the sunshade may crack.**

Installing the Sunshade

Reelmaster 5010 Machine or Groundsmaster 4300 Machine

1. To properly align the frame, attach the frame-alignment bar to the mounting tabs on the rear of the sunshade frame with 2 flange-head bolts (5/16 x 1-1/4 inches) as shown in Figure 30.

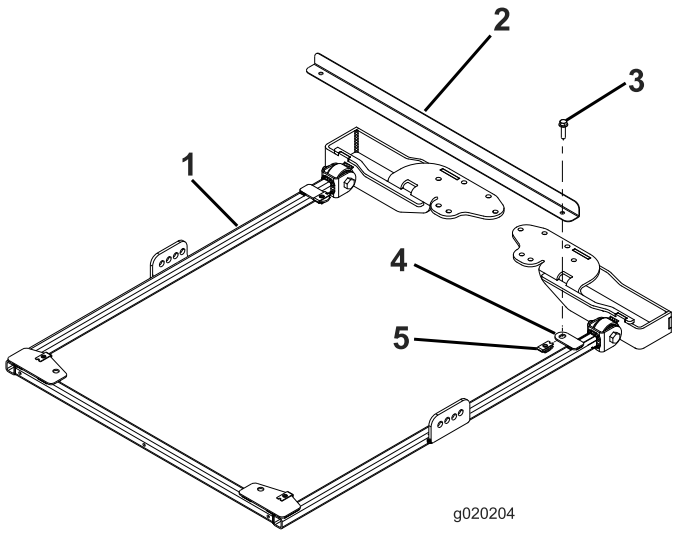

g020204

Figure 30

1. Sunshade frame
2. Frame-alignment bar
3. Flange-head bolt (5/16 x 1-1/4 inches)
4. Mounting tab
5. Retainer nut

2. On each side of the sunshade frame, loosely mount a brace to the second hole of the brace bracket with a bolt (1/2 x 2-1/2 inches), washer (1/2 inch), and flange nut (1/2 inch) as shown in Figure 31.

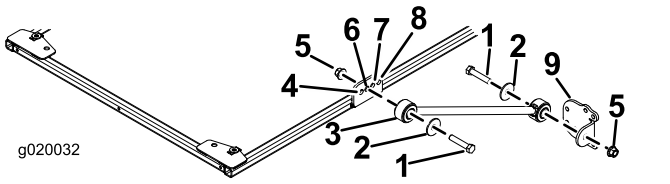

g020032

Figure 31

1. Bolt (1/2 x 2-1/2 inches)
2. Washer (1/2 inch)
3. Brace
4. Front hole
5. Flange nut (1/2 inch)
6. Second hole
7. Third hole
8. Rear hole
9. Brace bracket

3. Loosely install a brace bracket to each brace with a bolt (1/2 x 2-1/2 inches), washer (1/2 inch), and flange nut (1/2 inch) as shown in Figure 31.

4. Position the ROPS-mounting brackets onto the top of the traction unit roll bar (Figure 32). Make sure that the roll bar is centered in the ROPS-mounting brackets.

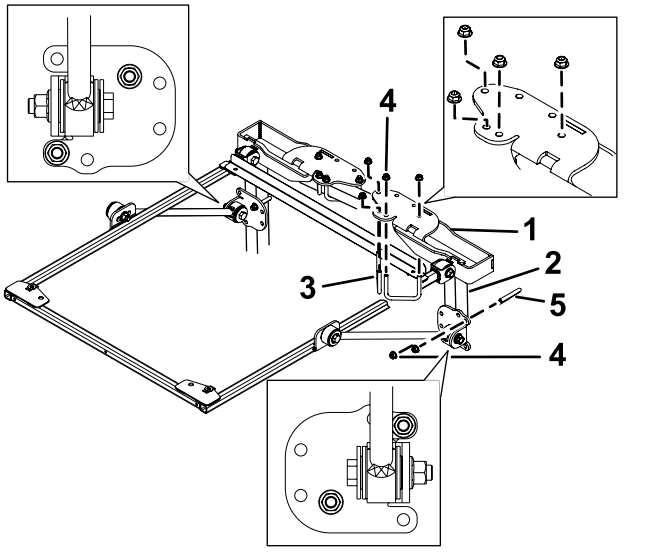

Figure 32

1. ROPS-mounting bracket
2. Roll bar post
3. U-bolt (2-3/4 inches)
4. Flange nut (3/8 inch)
5. U-bolt (4 inches)

5. Using the mounting holes shown in Figure 32, mount each ROPS-mounting brackets to the top of the roll bar with 2 U-bolts (2-3/4 inches) and 4 flange nuts.
6. Using the mounting holes shown in Figure 32, loosely secure each of the brace brackets to the roll bar posts with a U-bolt (4 inches) and 2 flange nuts.
7. Move the brace brackets up or down, on the vertical roll bar posts, until the sunshade frame is level to the floor.

   Note: Use a level to ensure that the frame is level to the ground.

   Note: Use the front or rear mounting holes in the brace bracket, if you need more adjustability.
8. Tighten the U-bolt flange nuts, securing the mounting brackets to the posts.
9. Tighten all the remaining flange nuts as follows:
   - Torque the flange nuts (3/8 inch) 41 to 55 N·m (34 to 41 ft-lb).
   - Torque the flange nuts (1/2 inch) 113 to 141 N·m (84-104 ft-lb).
10. Remove the flange-head bolts securing the frame-alignment bar to the frame and remove the alignment bar. Retain the bolts for mounting the sunshade.

11. While aligning the mounting holes, position the sunshade onto the frame as shown in Figure 33.

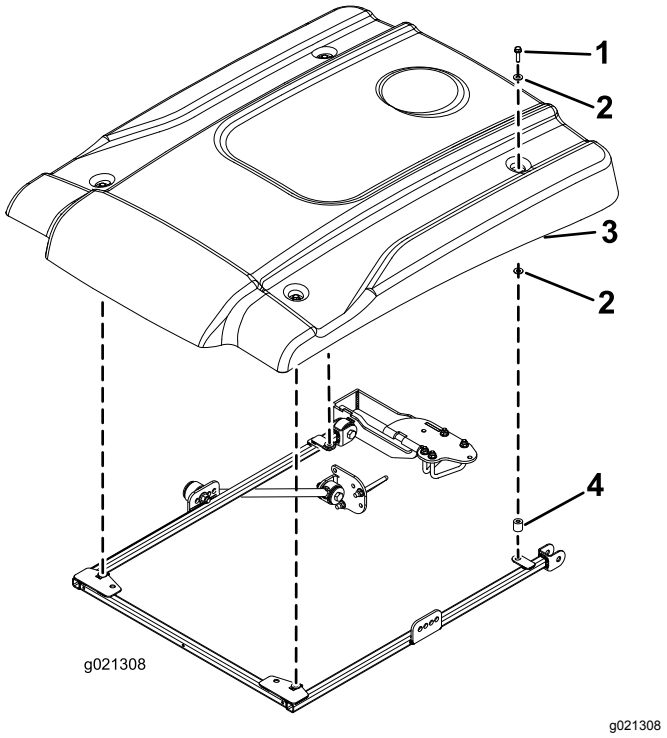

Figure 33

1. Flange-head bolt (5/16 x 2-1/4 inches)
2. Small washer
3. Sunshade
4. Spacer

12. Loosely mount each corner of the sunshade to the frame with a flange-head bolt (5/16 x 2-1/4 inches), 2 small washers, and a spacer (Figure 33). Position a washer on each side of the sunshade-rubber grommet.
13. Tighten the sunshade-mounting bolts to 5 to 6 N·m (45 to 55 in-lb).

Important: **Do not overtighten the mounting bolts as the sunshade may crack.**

Installing the Sunshade

Reelmaster 3100 and 3550 Machines or Groundsmaster 3500 and 3505 Machines

(Serial #400000000 and up only)

1. To properly align the frame, attach the frame-alignment bar to the mounting tabs on the rear of the sunshade frame with 2 flange-head bolts (5/16 x 1-1/4 inches) as shown in Figure 34.

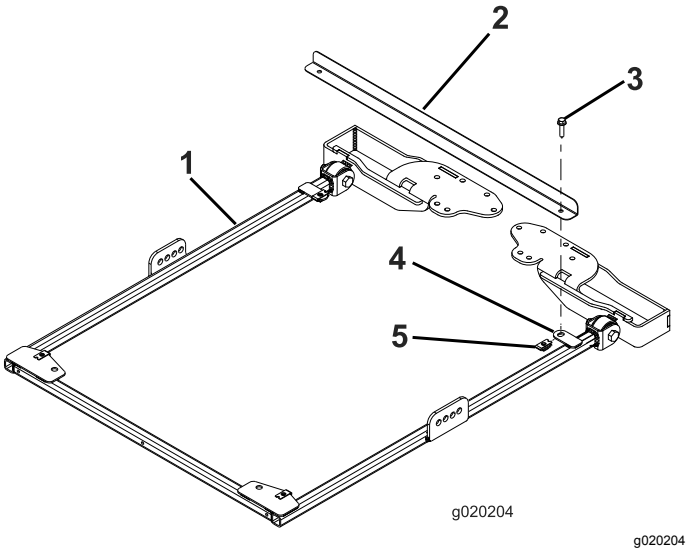

Figure 34

1. Sunshade frame
2. Frame-alignment bar
3. Flange-head bolt (5/16 x 1-1/4 inches)
4. Mounting tab
5. Retainer nut

2. On each side of the sunshade frame, loosely mount a brace to the third hole of the brace bracket with a bolt (1/2 x 2-1/2 inches), washer (1/2 inch), and flange nut (1/2 inch) as shown in Figure 35.

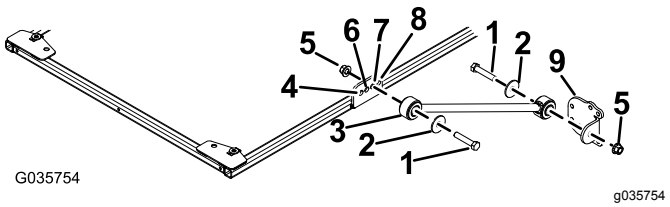

Figure 35

1. Bolt (1/2 x 2-1/2 inches)
2. Washer (1/2 inch)
3. Brace
4. Front hole
5. Flange nut (1/2 inch)
6. Second hole
7. Third hole
8. Rear hole
9. Brace bracket

3. Loosely install a brace bracket to each brace with a bolt (1/2 x 2-1/2 inches), washer (1/2 inch), and flange nut (1/2 inch) as shown in Figure 35.
4. Position the ROPS-mounting brackets onto the top of the traction unit roll bar (Figure 36). Make sure that the roll bar is centered in the ROPS-mounting brackets.

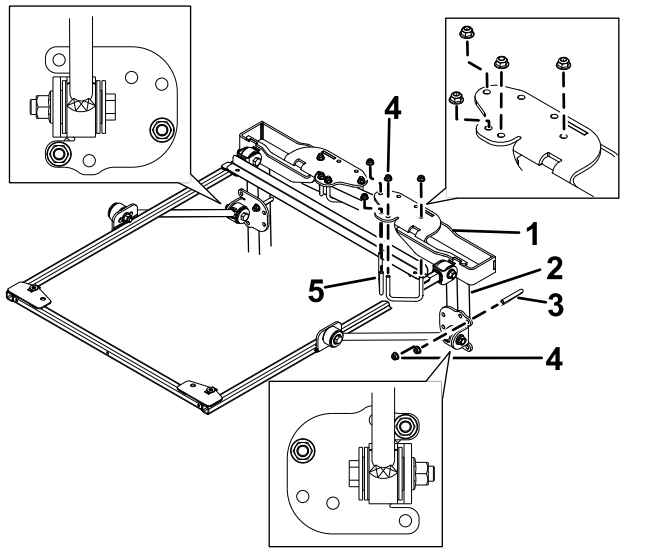

Figure 36

1. ROPS-mounting bracket
2. Roll bar post
3. U-bolt (4 inches)
4. Flange nut (3/8 inch)
5. U-bolt (2-3/4 inch)

5. Using the mounting holes shown in Figure 36, mount each ROPS-mounting brackets to the top of the roll bar with 2 U-bolts (2-3/4 inch) and 4 flange nuts.
6. Using the mounting holes shown in Figure 36, loosely secure each of the brace brackets to the roll bar posts with a U-bolt (4 inches) and 2 flange nuts.
7. Move the brace bracket up or down, on the vertical roll bar posts, until the sunshade frame is level to the floor.

   Note: Use a level to make sure that the frame is level to the ground.

   Note: Use the front or rear mounting holes in the brace bracket, if you need more adjustability.
8. Tighten the U-bolt flange nuts, securing the mounting brackets to the posts
9. Tighten all the remaining flange nuts as follows:
   - Torque the flange nuts (3/8 inch) 41 to 55 N·m (34 to 41 ft-lb).
   - Torque the flange nuts (1/2 inch) 113 to 141 N·m (84 to 104 ft-lb).
10. Remove the flange-head bolts securing the frame-alignment bar to the frame and remove the alignment bar. Retain the bolts for mounting the sunshade.
11. While aligning the mounting holes, position the sunshade onto the frame as shown in Figure 37.

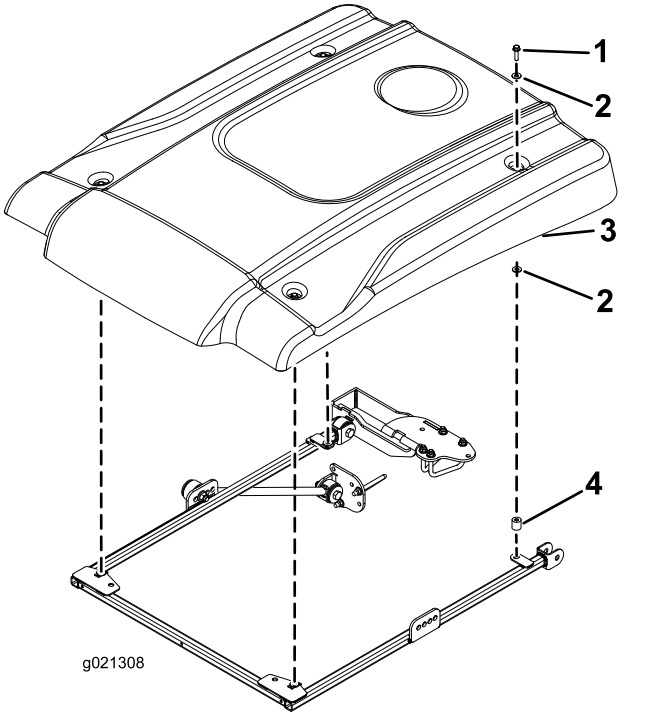

Figure 37

1. Flange-head bolt (5/16 x 1-1/4 inches)
2. Small washer
3. Sunshade
4. Spacer

12. Loosely mount each corner of the sunshade to the frame with a flange-head bolt (5/16 x 1-1/4 inches) and 2 small washers and a spacer (Figure 37). Position a washer on each side of the sunshade-rubber grommet.
13. Tighten the sunshade-mounting bolts to 5 to 6 N·m (45 to 55 in-lb).

    Important: **Do not overtighten the mounting bolts as the sunshade may crack.**

Operation

Transporting the Machine

When transporting the machine, use the 2 holes in the front of the sunshade frame (under the sunshade) to tie down the sunshade to a secure location on the machine and prevent it from raising up in the wind (Figure 38).

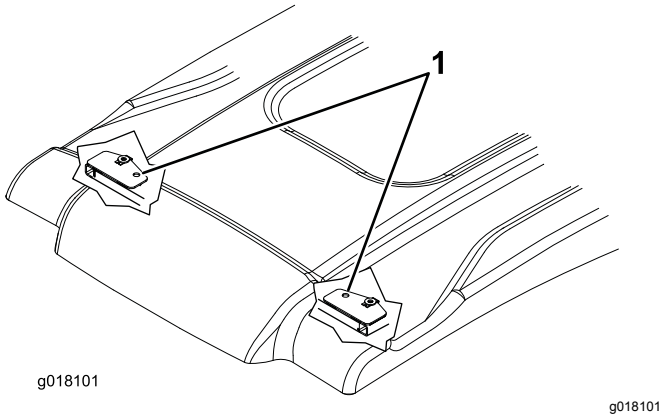

Figure 38

1. Tie down holes

Maintenance

Checking and Tightening the Hardware

Check and tighten the mounting hardware after 8 hours of operation. Periodically inspect and tighten the hardware.

Cleaning the Sunshade

Wash with a mild soap or detergent using your bare hands, soft cloth, or sponge to free or dislodge any caked-on dirt or other foreign particles.

Note: Using some cleaners or cloths may scratch or degrade the surface of the sunshade. Test the cleaner or cloth in an inconspicuous area.