TORO®

PART NO. 75–6690

INSTALLATION INSTRUCTIONS

WEIGHT KIT
FOR REELMASTER 5100D TRACTION UNITS

1. Mount weight bar(s) to rear of machine with (2) capscrews, lockwashers and nuts (Fig. 1). Use appropriate length screws depending on amount of weight bars installed.

2. Affix decal to approximately the center of the rear weight bar.

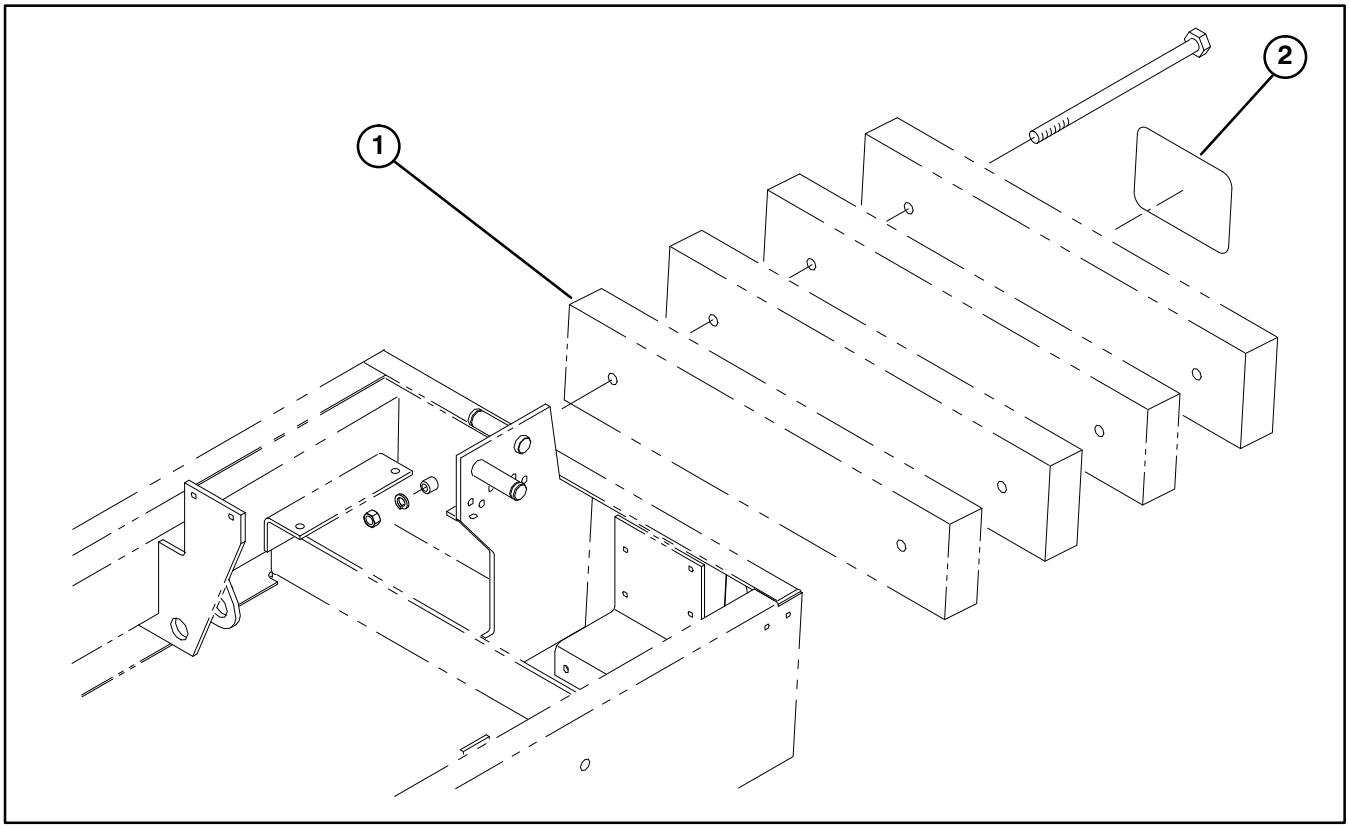

Figure 1

1. Weight Bar (s)
2. Decal

PROTOTYPE

© The TORO Company – 1998