Form No. 3403-282 Rev D

TORO®

Count on it.

Operator's Manual

GrandStand® Mower

With 48in or 52in TURBO FORCE® Cutting Unit

Model No. 74504—Serial No. 316000001 and Up
Model No. 74505—Serial No. 316000001 and Up
Model No. 79504—Serial No. 316000001 and Up
Model No. 79505—Serial No. 316000001 and Up

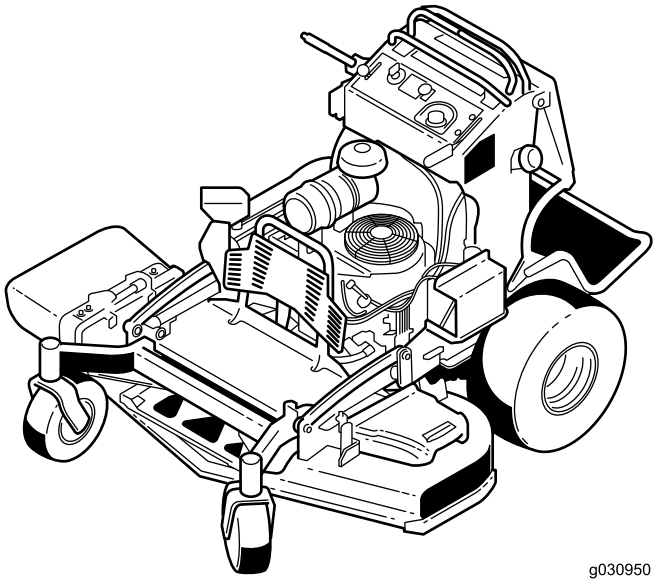

g030950

Register at www.Toro.com.
Original Instructions (EN)

3403-282 D

⚠ WARNING

CALIFORNIA
Proposition 65 Warning

This product contains a chemical or chemicals known to the State of California to cause cancer, birth defects, or reproductive harm.

The engine exhaust from this product contains chemicals known to the State of California to cause cancer, birth defects, or other reproductive harm.

This spark ignition system complies with Canadian ICES-002

It is a violation of California Public Resource Code Section 4442 or 4443 to use or operate the engine on any forest-covered, brush-covered, or grass-covered land unless the engine is equipped with a spark arrester, as defined in Section 4442, maintained in effective working order or the engine is constructed, equipped, and maintained for the prevention of fire.

The enclosed *Engine Owner's Manual* is supplied for information regarding the US Environmental Protection Agency (EPA) and the California Emission Control Regulation of emission systems, maintenance, and warranty. Replacements may be ordered through the engine manufacturer.

⚠ WARNING

Removing standard original equipment parts and accessories may alter the warranty, traction, and safety of the machine. Failure to use original Toro parts could cause serious injury or death. Making unauthorized changes to the engine, fuel or venting system, may violate EPA and CARB regulations.

Replace all parts including, but not limited to, tires, belts, blades, and fuel system components with original Toro parts.

Introduction

This rotary blade, ride-on lawn mower is intended to be used by professional, hired operators, or residential homeowners. It is designed primarily for cutting grass on well-maintained lawns on residential or commercial properties. It is not designed for cutting brush or for agricultural uses.

Read this information carefully to learn how to operate and maintain your product properly and to avoid injury and product damage. You are responsible for operating the product properly and safely.

You may contact Toro directly at www.Toro.com for product safety and operation training materials, accessory information, help finding a dealer, or to register your product.

Whenever you need service, genuine Toro parts, or additional information, contact an Authorized Service Dealer or Toro Customer Service and have the model and serial numbers of your product ready. Figure 1 identifies the location of the model and serial numbers on the product. Write the numbers in the space provided.

Important: **With your mobile device, you can scan the QR code on the serial number decal (if equipped) to access warranty, parts, and other product information.**

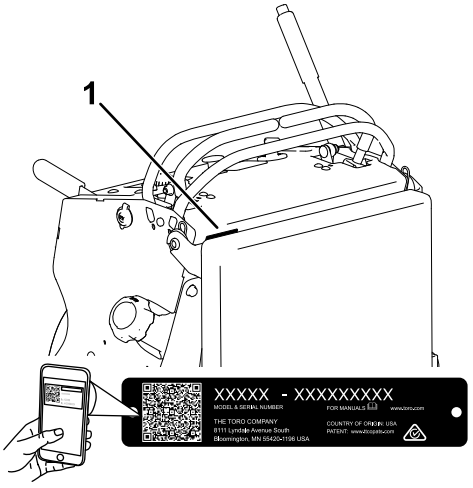

g235457

Figure 1

1. Location of the model and serial numbers

Model No. _____

Serial No. _____

This manual identifies potential hazards and has safety messages identified by the safety-alert symbol (Figure 2), which signals a hazard that may cause

© 2017—The Toro® Company
8111 Lyndale Avenue South
Bloomington, MN 55420

Contact us at www.Toro.com.
Printed in the USA
All Rights Reserved

serious injury or death if you do not follow the recommended precautions.



g000502

Figure 2

1. Safety-alert symbol

This manual uses 2 words to highlight information. **Important** calls attention to special mechanical information and **Note** emphasizes general information worthy of special attention.

Contents

Safety 4
- Safe Operating Practices 4
- Toro Mower Safety 6
- Slope Indicator 8
- Safety and Instructional Decals 9

Product Overview 13
- Controls 13
- Specifications 14

Operation 15
- Think Safety First 15
- Adding Fuel 15
- Checking the Engine-Oil Level 16
- Breaking in a New Machine 16
- Operating the Parking Brake 17
- Operating the Mower-Blade-Control Switch (PTO) 17
- Operating the Throttle 17
- Operating the Choke 18
- Operating the Ignition Switch 18
- Using the Fuel-Shutoff Valve 18
- Starting the Engine 19
- Shutting Off the Engine 19
- The Safety-Interlock System 20
- Operating the Platform 21
- Driving Forward or Backward 21
- Stopping the Machine 23
- Pushing the Machine by Hand 23
- Transporting the Machine 24
- Loading the Machine 24
- Side Discharging or Mulching the Grass 25
- Adjusting the Height-of-Cut 26
- Adjusting the Flow Baffle 26
- Positioning the Flow Baffle 27
- Using the Mid-Size Weight 28

Maintenance 29
- Recommended Maintenance Schedule(s) 29
- Pre-Maintenance Procedures 30
  - Releasing the Cushion for Rear Access 30
- Lubrication 30
  - Greasing the Torsion Idler 30
  - Greasing the Front Caster Pivots 31
  - Greasing the Caster-Wheel Hubs 31
  - Greasing the Motion Controls 32
- Engine Maintenance 32
  - Servicing the Air Cleaner 32
  - Servicing the Engine Oil 33
  - Servicing the Spark Plug 36
  - Checking the Spark Arrester 37
- Fuel System Maintenance 37
  - Draining the Fuel Tank 37
  - Removing the Fuel Tank 38
  - Servicing the Fuel Filter 38
- Electrical System Maintenance 39
  - Servicing the Battery 39
  - Servicing the Fuses 41

Drive System Maintenance 41
Adjusting the Tracking 41
Checking the Tire Pressure..... 42
Adjusting the Caster-Pivot Bearing 42
Servicing the Caster Wheels and Bearings..... 43
Removing the Clutch Shim 43
Checking the Wheel-Lug Nuts 45
Checking the Wheel-Hub Nuts..... 45
Cooling System Maintenance 45
Cleaning the Air-Intake Screen 45
Cleaning the Cooling System..... 45
Brake Maintenance 46
Servicing the Brake 46
Belt Maintenance 46
Replacing the Mower-Deck Belt..... 46
Replacing the Transmission Belt 47
Controls System Maintenance 48
Adjusting the Motion-Control Levers 48
Hydraulic System Maintenance 49
Hydraulic System Specifications..... 49
Checking the Hydraulic Fluid 49
Replacing the Hydraulic Fluid and Filters..... 50
Bleeding the Hydraulic System 51
Mower Deck Maintenance..... 51
Servicing the Cutting Blades..... 51
Leveling the Mower Deck..... 53
Adjusting the Deck-Lift Spring..... 55
Replacing the Grass Deflector 56
Cleaning 56
Cleaning under the Mower..... 56
Disposing of the Waste 56
Storage 57
Cleaning and Storage..... 57
Troubleshooting 58
Schematics 60

Safety

Improper use or maintenance by the operator or owner can result in injury. To reduce the potential for injury, comply with these safety instructions, and pay attention to the safety alert symbol , which means Caution, Warning, or Danger—personal safety instruction. Failure to comply with the instructions may result in personal injury or death.

This machine was manufactured according to the appropriate regulatory standards in effect at the time of manufacture. Modifying this machine in any way may cause it to be out of compliance with those standards and with the instructions in this *Operator's Manual*. Modifications to this machine should only be made by either the manufacturer or an Authorized Service Dealer.

This product is capable of amputating hands and feet. Follow all safety instructions to avoid serious injury or death.

The owner/user can prevent and is responsible for accidents or injuries occurring to people, or damage to property.

The addition of attachments made by other manufacturers that do not meet American National Standards Institute certification may cause noncompliance of this machine.

Safe Operating Practices

The following instructions are from ANSI standard B71.4-2012.

Training

- Read the *Operator's Manual* and other training material. If the operator(s) or mechanic(s) cannot read the manual language, it is the owner's responsibility to explain this material to them.
- Become familiar with the safe operation of the equipment, operator controls, and safety signs.
- All operators and mechanics should be trained. The owner is responsible for training the users.
- Never let children or untrained people operate or service the equipment. Local regulations may restrict the age of the operator.
- The owner/user can prevent and is responsible for accidents or injuries occurring to himself or herself, other people, or damage to property.

Preparation

- Evaluate the terrain to determine what accessories and attachments you need to properly and safely perform the job. Use only accessories and attachments approved by the manufacturer.
- Wear appropriate clothing; including safety glasses, long pants, substantial slip-resistant footwear, gloves, and hearing protection. Tie back long hair. Do not wear jewelry.
- Inspect the area where you will use the equipment and ensure that all objects are removed from the area before use.
- Use extra care when handling fuels. They are flammable and vapors are explosive.
  - Use only an approved container.
  - Do not remove the fuel cap or add fuel with the engine running. Allow the engine to cool before refueling. Do not smoke near the machine when the engine is running.
  - Do not refuel or drain the machine indoors.
- Check that the operator's presence controls, safety switches, and shields are attached and functioning properly. Do not operate the machine unless they are functioning properly.

Operation

- Lightning can cause severe injury or death. If lightning is seen, or thunder is heard in the area, do not operate the machine; seek shelter.
- Do not run an engine in an enclosed area.
- Operate only in well-lit areas, keeping away from holes and hidden hazards.
- Ensure that all drives are in neutral and that the parking brake is engaged before starting engine. Start the engine only from the operator’s position.
- Make sure that you have good footing while using this machine, especially when backing up. Reduced footing could cause slipping.
- Slow down and use extra care on hillsides. Be sure to travel side to side on hillsides. Turf conditions can affect the stability of the machine. Use caution while operating near drop-offs.
- Slow down and use caution when making turns and when changing directions on slopes.
- Do not raise the mower deck with the blades running.
- Do not operate the machine without the PTO shield or other guards securely in place. Be sure that all interlocks are attached, adjusted properly, and functioning properly.
- Do not operate with the discharge deflector raised, removed or altered, unless you are using a grass catcher.
- Do not change the engine governor setting or overspeed the engine.
- Stop on level ground, disengage drives, engage the parking brake, shut off the engine before leaving the operator's position for any reason, including emptying the catchers or unclogging the chute.
- Stop equipment and inspect the blades after striking objects or if an abnormal vibration occurs. Make the necessary repairs before resuming operations.
- Keep your hands and feet away from the cutting unit.
- Look behind and down before backing up to ensure a clear path.
- Keep pets and bystanders away from an operating machine.
- Slow down and use caution when making turns and crossing roads and sidewalks. Stop the blades if you are not mowing.
- Be aware of the mower-discharge direction and do not point it at anyone.
- Do not operate the machine while tired, ill, or under the influence of alcohol or drugs.
- Use care when loading or unloading the machine into or from a trailer or truck.
- Use care when approaching blind corners, shrubs, trees, or other objects that may obscure vision.

Maintenance and Storage

- Disengage drives, set the parking brake, shut off the engine, and remove the key or disconnect spark-plug wire. Wait for all movement to stop before adjusting, cleaning, or repairing.
- Clean grass and debris from the cutting unit, drives, mufflers, and engine to help prevent fires.
- Clean up oil or fuel spills.
- Let the engine cool before storing the machine.
- Do not store fuel near flames or drain the fuel indoors.
- Do not allow untrained personnel to service the machine.
- Use jack stands to support components when required.
- Carefully release pressure from components with stored energy.
- Disconnect the battery or remove the spark-plug wire before making any repairs. Disconnect the negative terminal first and the positive terminal last. Connect the positive terminal first and negative last.

- Use care when checking the blades. Wrap the blade(s) or wear gloves, and use caution when servicing them. Only replace blades; do not straighten or weld them.
- Keep hands and feet away from moving parts. If possible, do not make adjustments with the engine running.
- Keep all parts in good working condition and all hardware tightened. Replace all worn or damaged decals.

Hauling

- Use care when loading or unloading the machine into a trailer or a truck.
- Use full-width ramps for loading machine into a trailer or a truck.
- Tie the machine down securely using straps, chains, cable, or ropes. Both front and rear straps should be directed down and outward from the machine.

Toro Mower Safety

The following list contains safety information specific to Toro products and other safety information that you must know.

This product is capable of amputating hands and feet and of throwing objects. Always follow all safety instructions to avoid serious injury or death.

This product is designed for cutting and recycling grass, or, when equipped with a grass bagger, for catching cut grass. Any use for purposes other than these could prove dangerous to the user and bystanders.

General Operation

- Be sure that the area is clear of bystanders before mowing. Stop the machine if anyone enters the area.
- Do not touch equipment or attachment parts which may be hot from operation. Allow all the parts to cool before attempting to maintain, adjust, or service the machine.
- Use only Toro-approved attachments. Warranty may be voided if used with any unapproved attachments.
- Check carefully for overhead clearances (i.e., branches, doorways, electrical wires, etc.) before operating under any objects, and do not contact them.
- Slow down before making turns and use extra caution.
- Use caution when riding the platform over curbs, rocks, roots, or other obstructions.
- Look behind and down before backing up to ensure a clear path. Use extra care when operating the machine in reverse.
- Do not jerk the controls; use a steady motion.
- When loading or unloading the machine, use 1 full-width ramp that is wide enough to extend beyond the width of the machine.
- Do not carry passengers.
- Do not carry equipment on the machine.

Slope Operation

All slopes and ramps require extra caution. If you feel uneasy on a slope, do not mow it.

- Remove obstacles such as rocks, tree limbs, etc. from the mowing area.
- Watch for holes, ruts or bumps. Tall grass can hide obstacles.
- Use caution near drop-offs, ditches, or embankments. The machine could suddenly turn over if a wheel goes over the edge of a cliff or ditch, or if an edge caves in.
- Use extra care with grass catchers or other attachments. These can change the stability of the machine.
- Keep all movement on slopes slow and gradual.
- Do not make sudden changes in speed or direction.
- Mow slopes side to side.
- Do not mow slopes greater than 20 degrees.

Service

- Do not store the machine or a fuel container inside where there is an open flame, such as near a water heater or furnace.
- Keep the nuts and bolts tight, especially the blade-attachment bolts.
- Never remove or tamper with safety devices. Check their proper operation regularly. Never do anything to interfere with the intended function of a safety device or to reduce the protection provided by a safety device.
- To best protect your investment and maintain optimal performance of your Toro equipment, count on Toro genuine parts. When it comes to reliability, Toro delivers replacement parts designed to the exact engineering specifications of our equipment. For peace of mind, insist on Toro genuine parts.
- Check the operation of the brakes frequently. Adjust and service them as required.

Slope Indicator

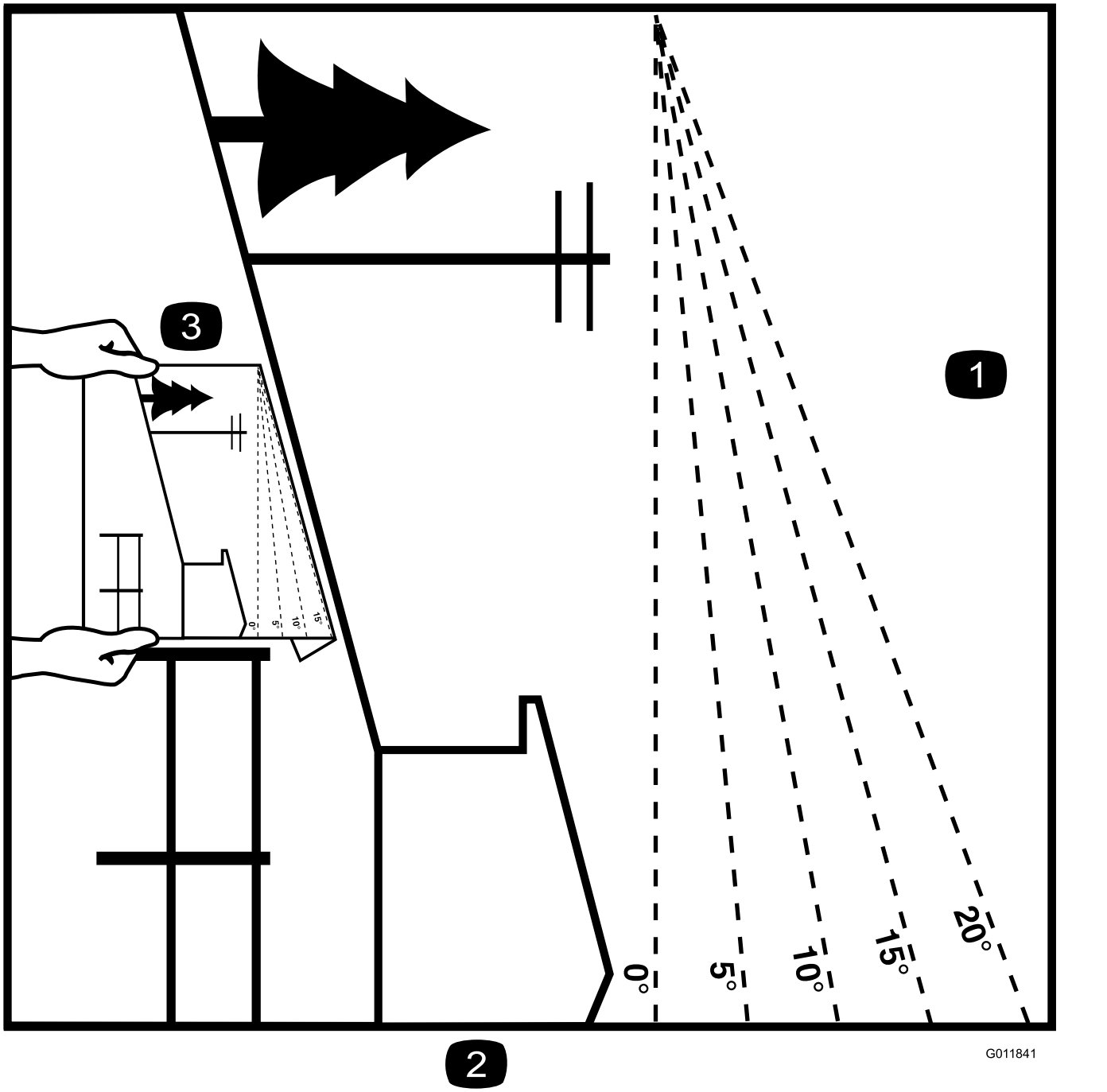

Figure 3

This page may be copied for personal use.

1. The maximum slope you can operate the machine on is **15 degrees**. Use the slope chart to determine the degree of slope of hills before operating. **Do not operate this machine on a slope greater than 15 degrees.** Fold along the appropriate line to match the recommended slope.
2. Align this edge with a vertical surface, a tree, building, fence pole, etc.
3. Example of how to compare slope with folded edge

Safety and Instructional Decals

Safety decals and instructions are easily visible to the operator and are located near any area of potential danger. Replace any decal that is damaged or missing.

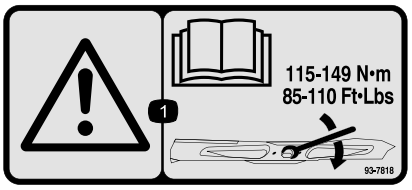

decal93-7818

93-7818

1. Warning—read the *Operator's Manual* for instructions on torquing the blade bolt/nut to 115 to 149 N·m (85 to 110 ft-lb).



decalbatterysymbols

Battery Symbols

Some or all of these symbols are on your battery

1. Explosion hazard
2. No fire, open flame, or smoking.
3. Caustic liquid/chemical burn hazard
4. Wear eye protection.
5. Read the *Operator's Manual.*
6. Keep bystanders a safe distance from the battery.
7. Wear eye protection; explosive gases can cause blindness and other injuries.
8. Battery acid can cause blindness or severe burns.
9. Flush eyes immediately with water and get medical help fast.
10. Contains lead; do not discard.

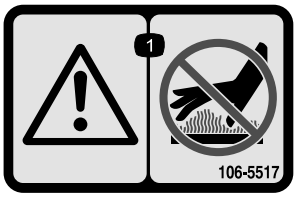

decal106-5517

106-5517

1. Warning—do not touch the hot surface.

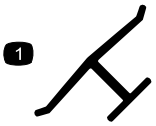

decaloemmarkt

Manufacturer's Mark

1. Indicates the blade is identified as a part from the original machine manufacturer.

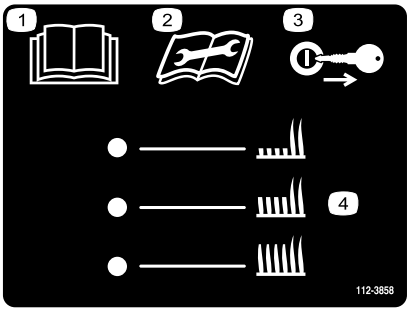

decal112-3858

112-3858

1. Read the *Operator's Manual*.
2. Read the instructions before servicing or performing maintenance.
3. Remove the ignition key before adjusting the height of cut.
4. Height-of-cut settings.

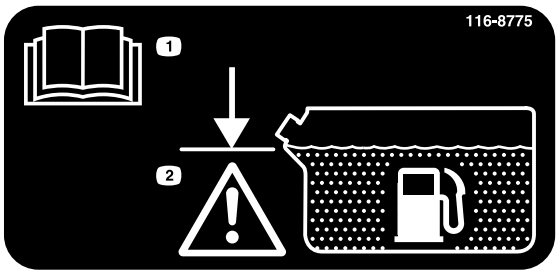

decal116-8775

116-8775

1. Read the *Operator's Manual.*
2. Fill to bottom of filler neck; warning—do not overfill the tank.

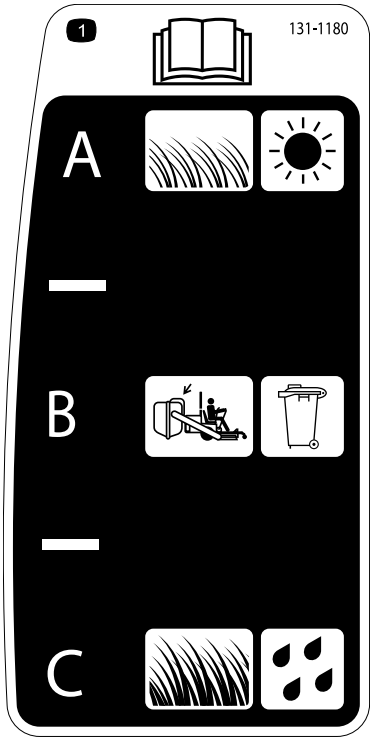

decal131-1180

131-1180

1. Read the *Operator's Manual*. (A) Short, light grass; dry conditions; maximum dispersion; (B) Bagging setting; (C) Tall, dense grass; wet conditions; maximum ground speed

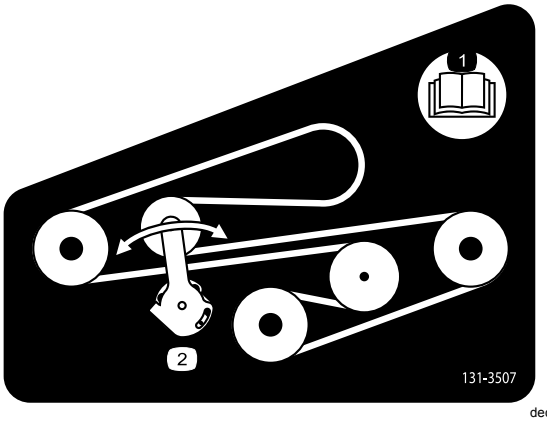

decal131-3507

131-3507

1. Read the *Operator's Manual*.
2. Belt tensioner

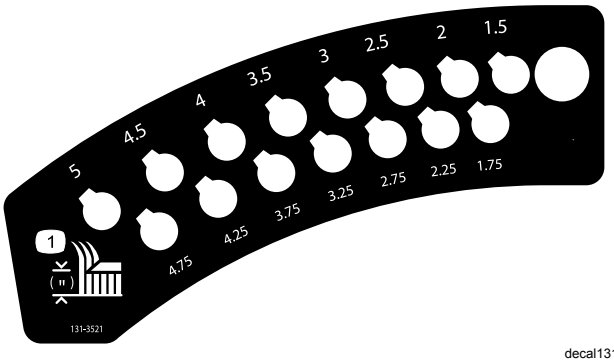

decal131-3521

131-3521

1. Height-of-cut

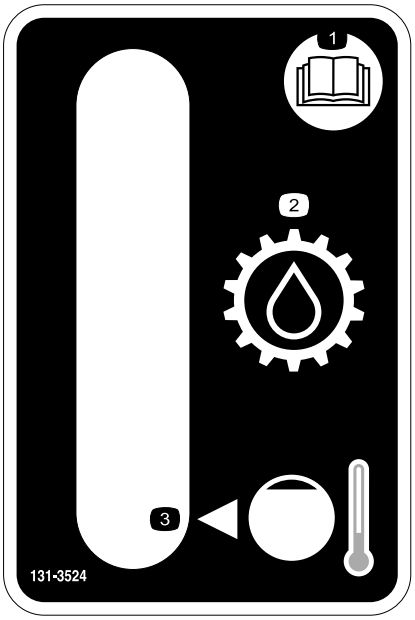

decal131-3524

131-3524

1. Read the *Operator's Manual*.
2. Transmission oil
3. Oil level

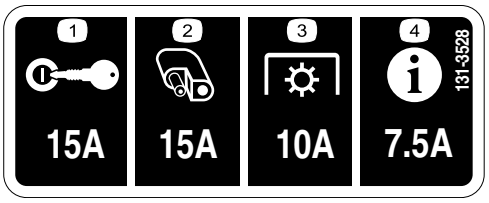

decal131-3528

131-3528

1. Ignition—15 A
2. Accessory port—15 A
3. Power takeoff (PTO)—10 A
4. Infocenter—7.5 A

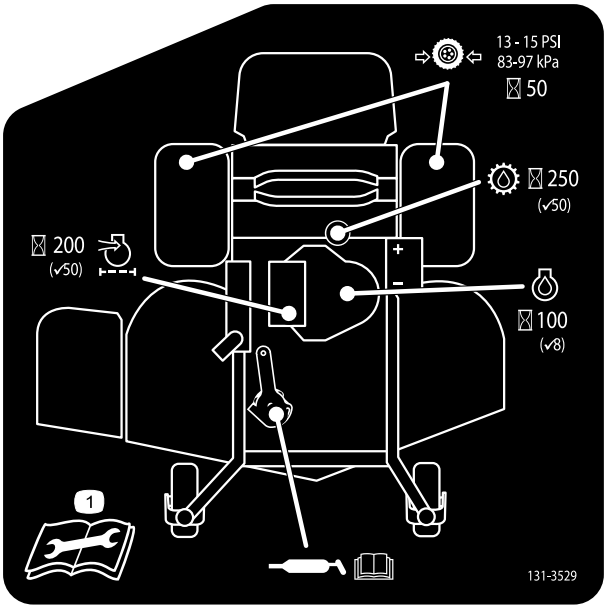

decal131-3529

131-3529

1. Read the *Operator's Manual* for more information on maintenance intervals and procedures.

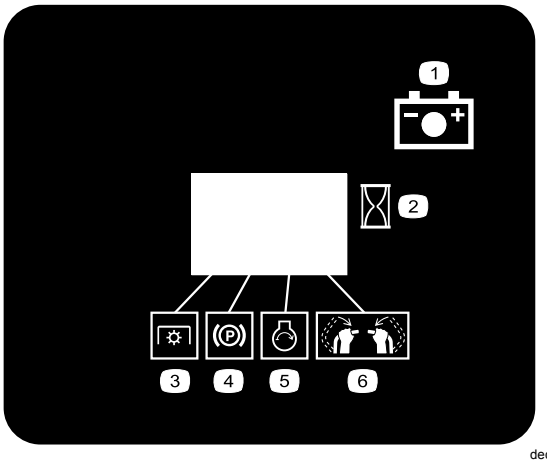

decal131-3536

131-3536

1. Battery
2. Time
3. Power takeoff (PTO)
4. Parking brake
5. Engine—start
6. Engage the handle bars.

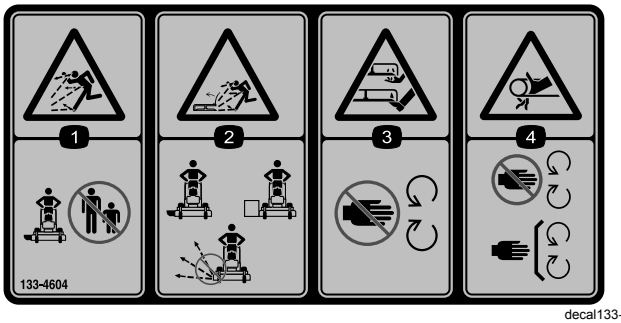

decal133-4604

133-4604

1. Thrown object hazard—keep bystanders away from the machine.
2. Thrown object hazard, open baffle—only operate the machine with a baffle or a grass collector.
3. Severing hazard of hand or foot—keep away from moving parts.
4. Entanglement hazard—keep away from moving parts; keep all guards and shields in place.

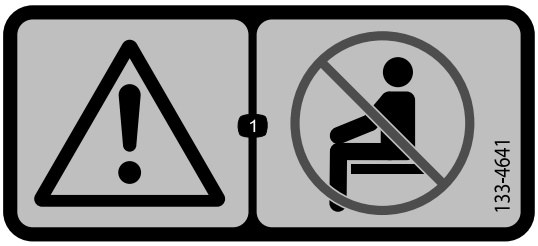

decal133-4641

133-4641

1. Warning—do not carry any passengers.

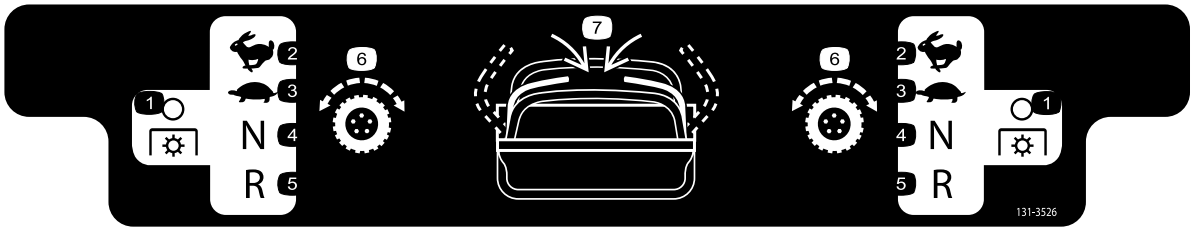

decal131-3526

131-3526

1. Power takeoff (PTO)—disengaged
2. Fast
3. Slow
4. Neutral
5. Reverse
6. Traction drive
7. Engage the handles.

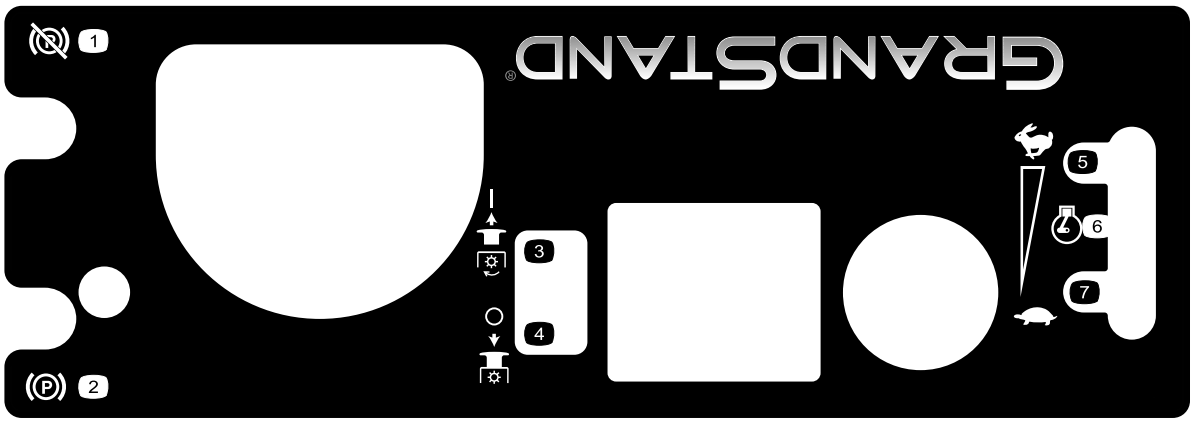

decal131-3525

131-3525

1. Disengage the parking brake.
2. Engage the parking brake.
3. Engage the PTO.
4. Disengage the PTO.
5. Fast
6. Engine—speed
7. Slow



decal131-3527

131-3527

1. Warning—read the *Operator's Manual*.
2. Warning—receive training before operating the machine.
3. Thrown object hazard—keep the deflector lowered during operation.
4. Cutting/severing hazard of hand or foot—keep away from moving parts; keep all guards and shields in place.
5. Thrown object hazard—keep bystanders away from the machine.
6. Warning—1) Engage the parking brake, shut off the engine, and remove the key from the ignition; 2) Read the *Operator's Manual* before servicing or performing maintenance.
7. Warning—engage the parking brake, shut off the engine, and remove the key from the ignition before leaving the machine.
8. Tipping hazard—do not operate near drop-offs or near water.

Product Overview

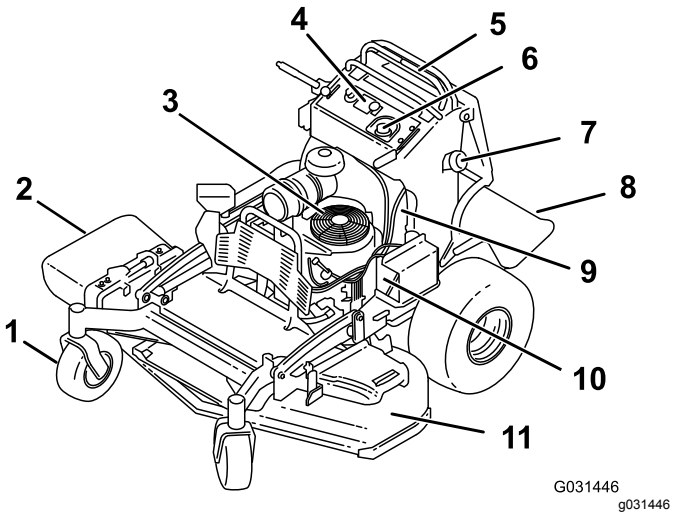

Figure 4

1. Front caster wheel
2. Side-discharge chute
3. Engine
4. Controls
5. Control levers
6. Hydraulic tank
7. Fuel tank
8. Platform (down position)
9. Fuel-shutoff valve
10. Battery
11. Mower deck

Controls

Become familiar with all the controls (Figure 5) before you start the engine and operate the machine.

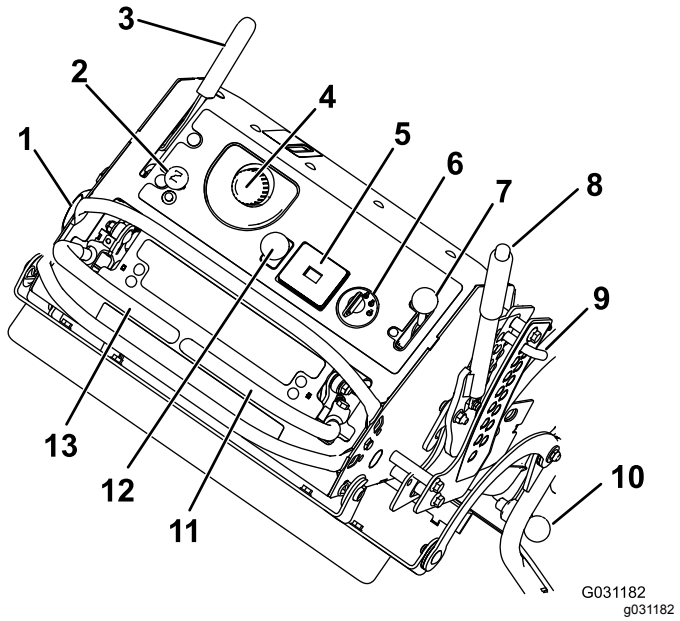

Figure 5

1. Fuel cap
2. Choke
3. Parking-brake lever
4. Hydraulic-tank cap
5. Hour meter
6. Ignition switch
7. Throttle control
8. Height-of-cut lever
9. Height-of-cut pin
10. Platform latch
11. Right motion-control lever
12. Blade-control switch (PTO)
13. Left motion-control lever

Hour Meter

The hour meter records the number of hours the engine has operated. It operates when the engine is running. Use these times for scheduling regular maintenance (Figure 5).

Safety-Interlock Indicators

Symbols on the hour meter indicate with a black triangle that the interlock component is in the correct position (Figure 5).

Battery-Indicator Light

If the ignition key is turned to the ON position for a few seconds, the battery voltage displays in the area where the hours are normally displayed.

The battery light turns on when the ignition is turned on and when the charge is below the correct operating level (Figure 5).

Throttle Control

The throttle control is variable between the FAST and SLOW positions (Figure 5).

Choke

Use the choke to start a cold engine (Figure 5).

Blade-Control Switch (PTO)

Use the blade-control switch (PTO) to engage and disengage the mower blades (Figure 5).

Ignition Switch

Use the ignition switch to start the mower engine (Figure 5). The switch has 3 positions: OFF, RUN, and START.

Motion-Control Levers

The motion-control levers are used to drive the machine forward and reverse and to turn either direction (Figure 5).

Fuel-Shutoff Valve

Close the fuel-shutoff valve (located on the left side of the fuel tank) when transporting or storing the mower (Figure 4).

Attachments/Accessories

A selection of Toro approved attachments and accessories is available for use with the machine to enhance and expand its capabilities. Contact your Authorized Service Dealer or Distributor or go to www.Toro.com for a list of all approved attachments and accessories.

Specifications

Note: Specifications and design are subject to change without notice.

48-inch Mowers

Width with deflector down	163 cm (64 inches)
Width with deflector raised	127 cm (50 inches)
Length with platform down	191 cm (75 inches)
Length with platform up	155 cm (61 inches)
Height	122 cm (48 inches)
Weight	408 kg (899 lb)

52-inch Mowers

Width with deflector down	173 cm (68 inches)
Width with deflector raised	137 cm (54 inches)
Length with platform down	191 cm (75 inches)
Length with platform up	155 cm (61 inches)
Height	122 cm (48 inches)
Weight	412 kg (908 lb)

Operation

Note: Determine the left and right sides of the machine from the normal operating position.

Think Safety First

Carefully read all the safety instructions and decals in the safety section. Knowing this information could help you or bystanders avoid injury.

⚠ CAUTION

This machine produces sound levels in excess of 85 dBA at the operator's ear and can cause hearing loss from extended periods of exposure.

Wear hearing protection when operating this machine.

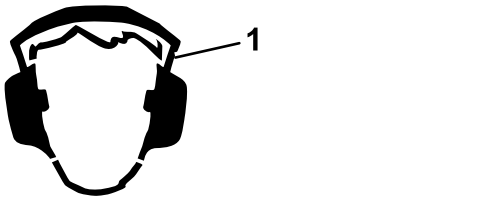

g229846

Figure 6

1. Wear hearing protection.

Adding Fuel

- For best results, use only clean, fresh (less than 30 days old), unleaded gasoline with an octane rating of 87 or higher ((R+M)/2 rating method).
- **Ethanol**: Gasoline with up to 10% ethanol (gasohol) or 15% MTBE (methyl tertiary butyl ether) by volume is acceptable. Ethanol and MTBE are not the same. Gasoline with 15% ethanol (E15) by volume is not approved for use. **Never use gasoline that contains more than 10% ethanol by volume**, such as E15 (contains 15% ethanol), E20 (contains 20% ethanol), or E85 (contains up to 85% ethanol). Using unapproved gasoline may cause performance problems and/or engine damage that may not be covered under warranty.
- **Do not** use gasoline containing methanol.
- **Do not** store fuel either in the fuel tank or fuel containers over the winter unless you use a fuel stabilizer.
- **Do not** add oil to gasoline.

⚠ DANGER

In certain conditions, fuel is extremely flammable and highly explosive. A fire or explosion from fuel can burn you and others and can damage property.

- **Fill the fuel tank outdoors, in an open area, when the engine is cold. Wipe up any fuel that spills.**
- **Never fill the fuel tank inside an enclosed trailer.**
- **Do not fill the fuel tank completely full. Add fuel to the fuel tank until the level is 6 to 13 mm (1/4 to 1/2 inch) below the bottom of the filler neck. This empty space in the tank allows fuel to expand.**
- **Never smoke when handling fuel, and stay away from an open flame or where fuel fumes may be ignited by a spark.**
- **Store fuel in an approved container and keep it out of the reach of children. Never buy more than a 30-day supply of fuel.**
- **Do not operate without entire exhaust system in place and in proper working condition.**

⚠ DANGER

In certain conditions during fueling, static electricity can be released causing a spark, which can ignite the fuel vapors. A fire or explosion from fuel can burn you and others and can damage property.

- **Always place fuel containers on the ground away from your vehicle before filling.**
- **Do not fill fuel containers inside a vehicle or on a truck or trailer bed because interior carpets or plastic truck bed liners may insulate the container and slow the loss of any static charge.**
- **When practical, remove gas-powered equipment from the truck or trailer and refuel the equipment with its wheels on the ground.**
- **If this is not possible, then refuel such equipment on a truck or trailer from a portable container rather than from a fuel-dispenser nozzle.**
- **If you must use a fuel-dispenser nozzle, keep the nozzle in contact with the rim of the fuel tank or container opening at all times until fueling is complete.**

⚠ WARNING

Fuel is harmful or fatal if swallowed. Long-term exposure to vapors can cause serious injury and illness.

- **Avoid prolonged breathing of vapors.**
- **Keep your face away from the nozzle and fuel tank or conditioner bottle opening.**
- **Avoid contact with skin; wash off spills with soap and water.**

Using Stabilizer/Conditioner

Use a fuel stabilizer/conditioner in the machine to provide the following benefits:

- Keeps fuel fresh during storage of 90 days or less. For longer storage, drain the fuel tank.
- Cleans the engine while it runs
- Eliminates gum-like varnish buildup in the fuel system, which causes hard starting

Important: **Do not use fuel additives containing methanol or ethanol.**

Add the correct amount of fuel stabilizer/conditioner to the fuel.

Note: A fuel stabilizer/conditioner is most effective when mixed with fresh fuel. To minimize the chance of varnish deposits in the fuel system, use fuel stabilizer at all times.

Filling the Fuel Tank

1. Park the machine on a level surface, disengage the PTO, move the motion-control levers to the NEUTRAL-LOCK position, and engage the parking brake.
2. Shut off the engine, remove the key, and wait for all moving parts to stop before leaving the operating position.
3. Clean around the fuel-tank cap and remove the cap.
4. Fill the fuel tank to the bottom of the filler neck.

   Note: Do not fill the fuel tank completely full. The empty space in the tank allows the gasoline to expand.
5. Install the fuel-tank cap securely. Wipe up any spilled fuel.

Checking the Engine-Oil Level

Before you start the engine and use the machine, check the oil level in the engine crankcase; refer to Checking the Engine-Oil Level (page 33).

Breaking in a New Machine

New engines take time to develop full power. Mower decks and drive systems have higher friction when new, placing additional load on the engine. Allow 40 to 50 hours of break-in time for new machines to develop full power and best performance.

Operating the Parking Brake

Always engage the parking brake when you shut off the machine or leave it unattended. Before each use, check the parking brake for proper operation.

If the parking brake does not hold securely, adjust it; refer to Adjusting the Brakes (page 46).

Pull the parking-brake lever rearward to engage it (Figure 7).

Push the parking-brake lever forward to disengage it.

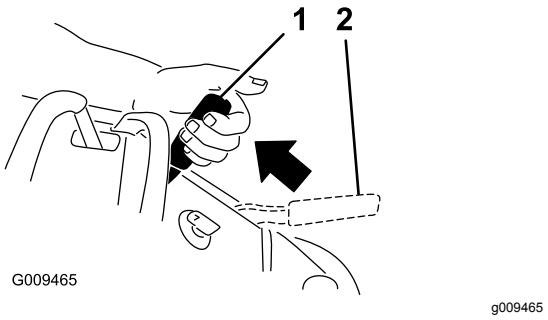

Figure 7

1. Parking brake—engaged
2. Parking brake—disengaged

Operating the Mower-Blade-Control Switch (PTO)

Use the blade-control switch (PTO) in conjunction with the motion-control levers to engage and disengage the mower blades.

Engaging the Mower Blades (PTO)

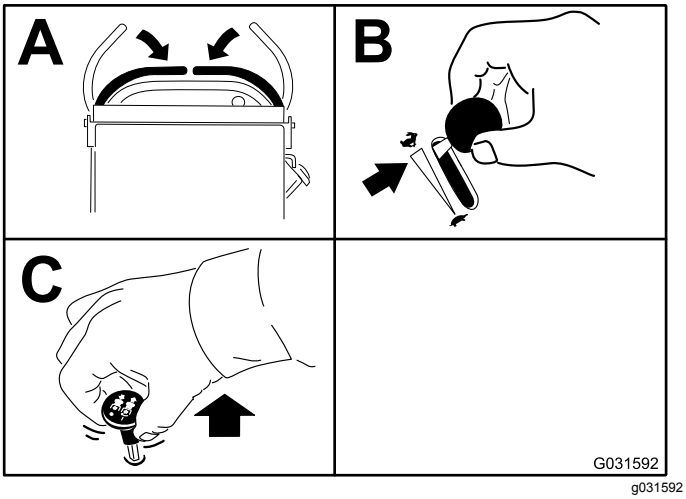

Figure 8

Disengaging the Mower Blades (PTO)

Figure 9 and Figure 10 show 2 ways to disengage the mower blades.

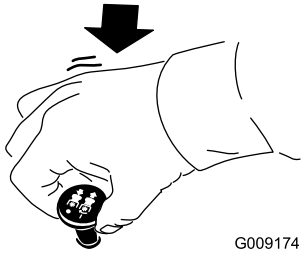

Figure 9

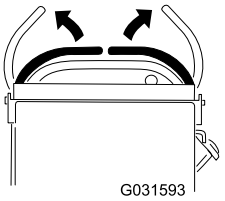

Figure 10

Operating the Throttle

The throttle control moves between FAST and SLOW positions (Figure 11).

Always use the FAST position when engaging the mower blades with the blade-control switch (PTO).

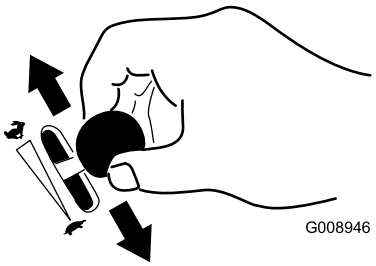

Figure 11

Operating the Choke

Use the choke to start a cold engine.

1. Pull up the choke knob to engage the choke before using the ignition switch (Figure 12).
2. Push down the choke knob to disengage the choke after the engine has started (Figure 12).

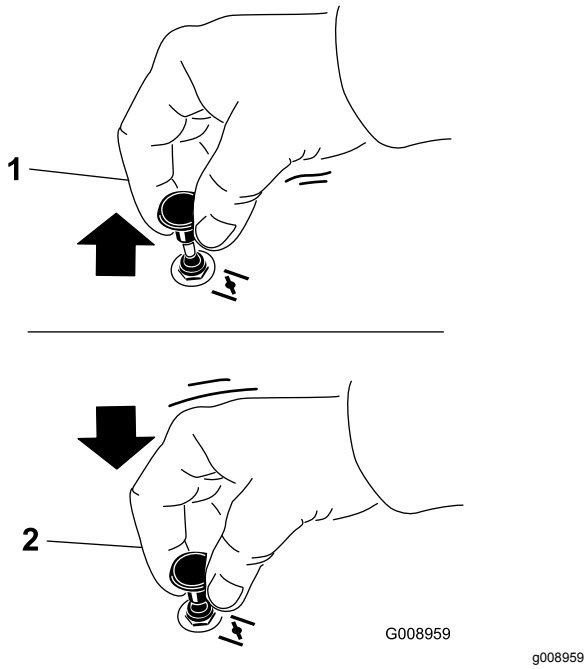

Figure 12

1. On position
2. Off position

Operating the Ignition Switch

Important: **Do not engage the starter for more than 5 seconds at a time. If the engine fails to start, wait 15 seconds between attempts. Failure to follow these instructions can burn out the starter motor.**

Note: You may need to repeat the cycle for starting the engine when you start it for the first time after you have filled a completely empty fuel system with fuel.

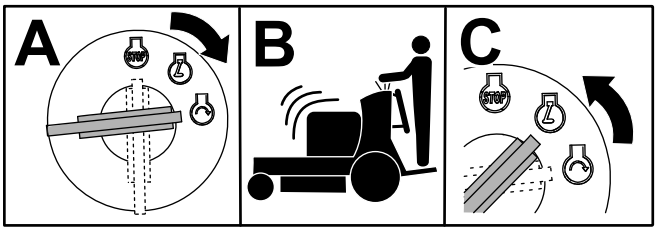

Figure 13

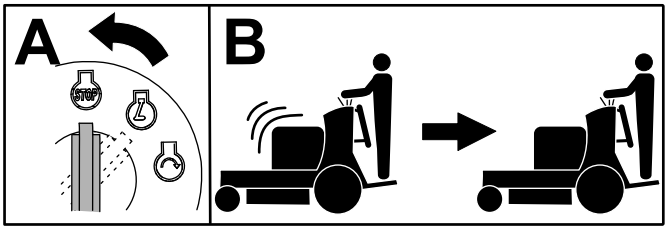

Figure 14

Using the Fuel-Shutoff Valve

Close the fuel-shutoff valve for transport, maintenance, and storage (Figure 15).

Ensure that the fuel-shutoff valve is open when starting the engine.

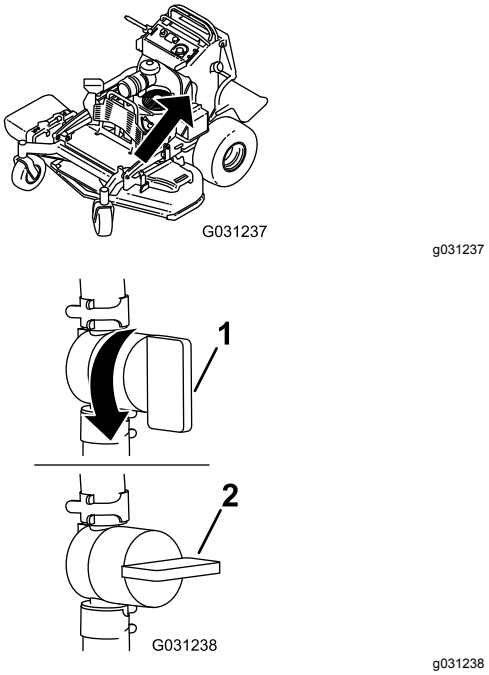

Figure 15

1. ON position
2. OFF position

Starting the Engine

Important: **Do not engage the starter for more than 5 seconds at a time. If the engine fails to start, wait 15 seconds between attempts. Failure to follow these instructions can burn out the starter motor.**

Note: You may need to repeat the cycle for starting the engine when you start it for the first time after you have filled a completely empty fuel system with fuel.

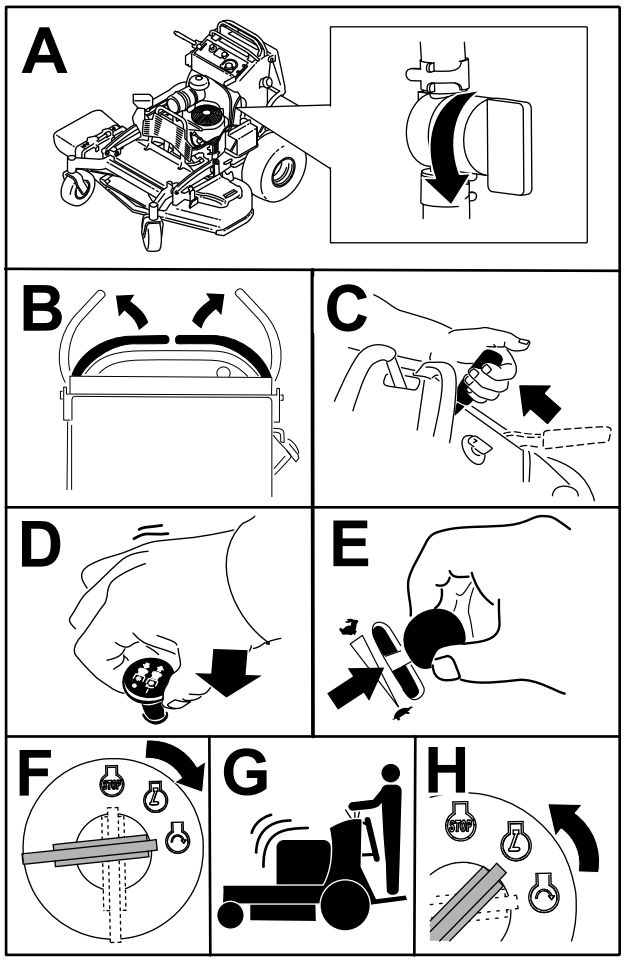

Figure 16

Shutting Off the Engine

⚠ CAUTION

Children or bystanders may be injured if they move or attempt to operate the machine while it is unattended.

Always remove the key and engage the parking brake when leaving the machine unattended.

Let the engine idle at slow throttle (turtle) for 60 seconds before turning the key switch to the OFF position.

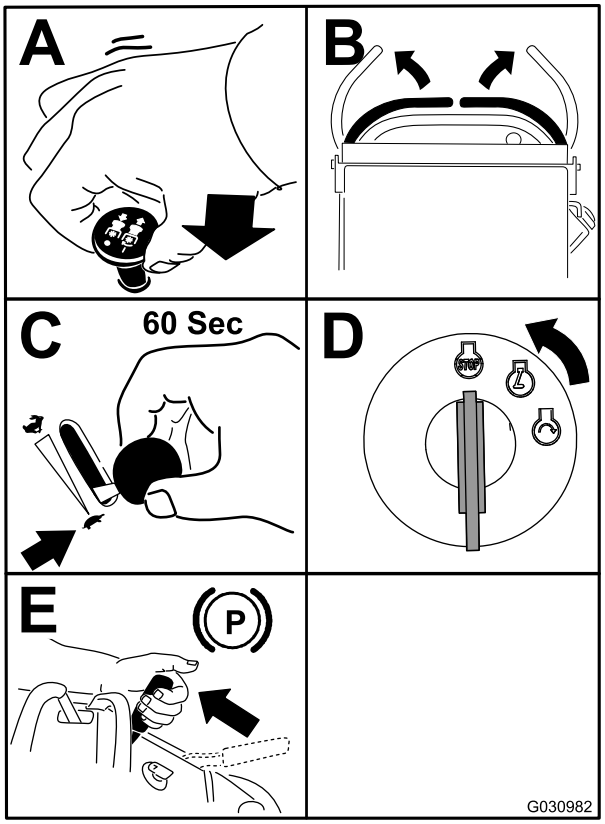

Figure 17

Important: **Make sure that the fuel-shutoff valve is closed before transporting or storing the machine to prevent a fuel leak. Before storing the machine, disconnect the spark plug(s) to prevent the possibility of accidental starting.**

The Safety-Interlock System

⚠ CAUTION

If the safety-interlock switches are disconnected or damaged, the machine could operate unexpectedly, causing personal injury.

- **Do not tamper with the interlock switches.**
- **Check the operation of the interlock switches daily and replace any damaged switches before operating the machine.**

Understanding the Safety-Interlock System

The safety-interlock system is designed to prevent the mower blades from rotating unless you do 1 of the following:

- Move either motion-control lever to the center, unlocked position.
- Pull the blade-control switch (PTO) to the ON position.

  The safety-interlock system is designed to stop the mower blades if you move or release both motion-control levers into the NEUTRAL-LOCK position.

  The hour meter has symbols to notify the user when each interlock component is in the correct position. When the component is in the correct position, a triangle lights up in the corresponding square (Figure 18).

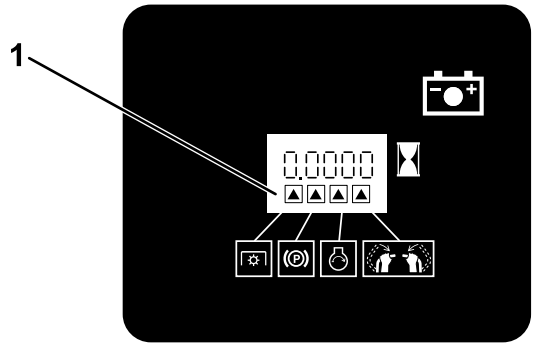

G031282

g031282

Figure 18

1. Triangles light up when the interlock components are in the correct position.

Testing the Safety-Interlock System

Service Interval: Before each use or daily

Test the safety-interlock system before you use the machine each time.

Note: If the safety system does not operate as described below, have an Authorized Service Dealer repair the safety system immediately.

1. Start the engine; refer to Starting the Engine (page 19).
2. Move the motion-control levers to the center, unlocked position.

   Note: The blades should not rotate and the engine should stop running.
3. Start the engine and release the parking brake.
4. Move either motion-control lever to the center, unlocked position.
5. Continue holding the motion-control lever in the center, unlocked position, pull up on the blade-control switch (PTO), and release the switch.

   Note: The clutch should engage and the mower blades rotate.
6. Move or release the motion-control levers into the NEUTRAL-LOCK position.

   Note: The blades should stop rotating and the engine should continue to run.
7. Push the blade-control switch down and move either motion-control lever to the center, unlocked position.
8. Continue holding the motion-control lever in the center, unlocked position, pull up on the blade-control switch (PTO), and release the switch.

   Note: The clutch should engage and the mower blades should rotate.
9. Push the blade-control switch (PTO) down to the OFF position.

   Note: The blades should stop rotating.
10. With the engine running, pull up the blade-control switch (PTO) and release it without holding either motion-control lever to the center, unlocked position.

    Note: The blades should not rotate.

⚠ WARNING

The operator platform is heavy and may cause injury when lowering and raising the operator platform. Carefully lower or raise the operator platform, as suddenly dropping it could injure you.

- **Do not put your hands or fingers in the platform-pivot area when lowering or raising the operator platform.**
- **Make sure that the platform is supported when you pull the latch pin out.**
- **Make sure that the latch secures the platform when folding it up. Push it tight against the cushion for the latch pin to lock into place.**
- **Keep bystanders away when raising or lowering the platform.**

Operating the Platform

You can use the machine with the platform in the up or down position. It is your preference on which position to use.

Operating the Machine with the Platform Up

Operate the machine with the platform up under the following conditions:

- Mowing near drop-offs
- Mowing small areas where the machine is too large
- Areas with low, over-hanging branches or obstacles
- Loading the machine for transport
- Driving up slopes

To raise the platform, pull the back of the platform up so that the latch pin and knob lock it into place. Push it tight against the cushion for the latch pin to lock it into place.

Operating the Machine with the Platform Down

Operate the machine with the platform down under the following conditions:

- Mowing most areas
- Driving across slopes
- Driving down slopes

To lower the platform, push the platform forward against the cushion to release pressure on the latch pin, then pull the knob out and lower the platform (Figure 19).

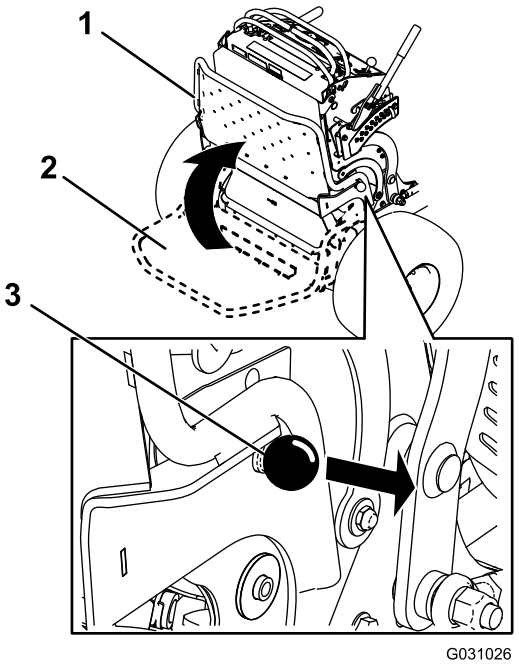

g031026

Figure 19

1. Platform up
2. Platform down
3. Pull the knob out to release the platform.

Driving Forward or Backward

The throttle control regulates the engine speed as measured in rpm (revolutions per minute). Place the throttle control in the FAST position for best performance.

Important: **Back the machine over curbs, 1 wheel at a time; driving it forward over curbs could damage the machine.**

⚠ CAUTION

The machine can spin very rapidly, and you may lose control of the machine, causing personal injury to you and damage to the machine.

Slow down the machine before making sharp turns.

Driving Forward

1. Disengage the parking brake; refer to Operating the Parking Brake (page 17).
2. Move the motion-control levers to the center, unlocked position.

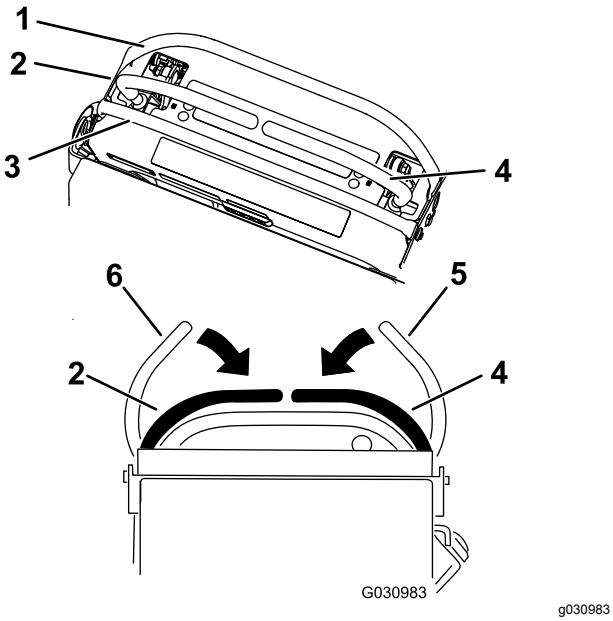

Figure 20

1. Front reference bar
2. Left control lever
3. Rear reference bar
4. Right control lever
5. Right control lever in the NEUTRAL-LOCK position
6. Left control lever in the NEUTRAL-LOCK position

3. Slowly push the motion-control levers forward (Figure 21).

   Note: The engine shuts off if you move a motion-control lever while the parking brake is engaged.

   Note: The farther you move the motion-control levers in either direction, the faster the machine moves in that direction.

   Note: To stop, pull the motion-control levers back to the NEUTRAL position.

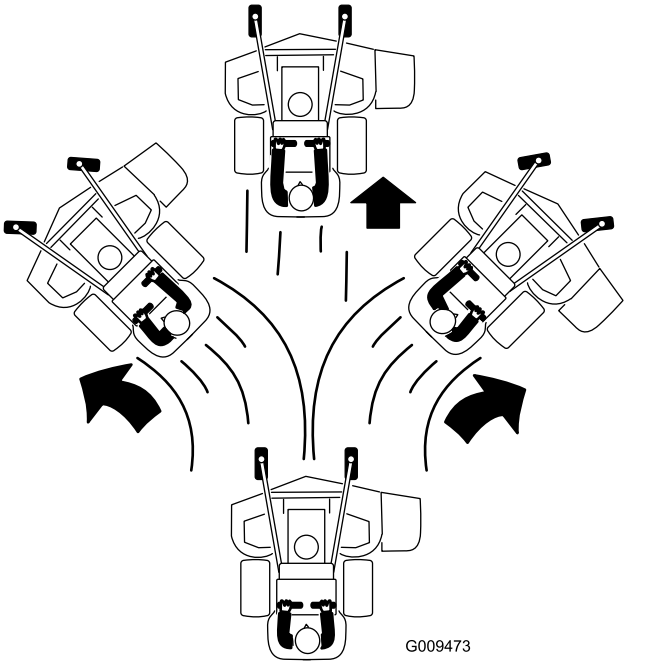

Figure 21

Driving Backward

1. Move both motion-control levers to the center, unlocked position.
2. Slowly pull the motion-control levers rearward (Figure 22).

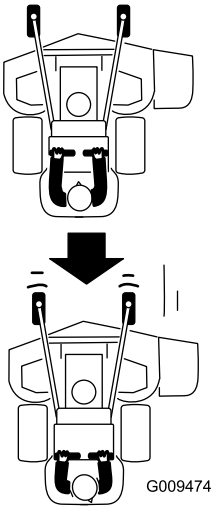

Figure 22

Stopping the Machine

To stop the machine, move the motion-control levers to neutral, then move the right motion-control lever into the NEUTRAL-LOCK position, disengage the power takeoff (PTO), and turn the key to the OFF position.

Engage the parking brake when you leave the machine; refer to Operating the Parking Brake (page 17). Remember to remove the key from the switch.

⚠ CAUTION

Children or bystanders may be injured if they move or attempt to operate the machine while it is unattended.

Always remove the key and engage the parking brake when leaving the machine unattended.

Pushing the Machine by Hand

The bypass valves allow you to push the machine by hand without the engine running.

Important: **Always push the machine by hand. Do not tow the machine, because hydraulic damage may occur.**

Important: **Do not start or operate the machine with the bypass valves open. Damage to system may occur.**

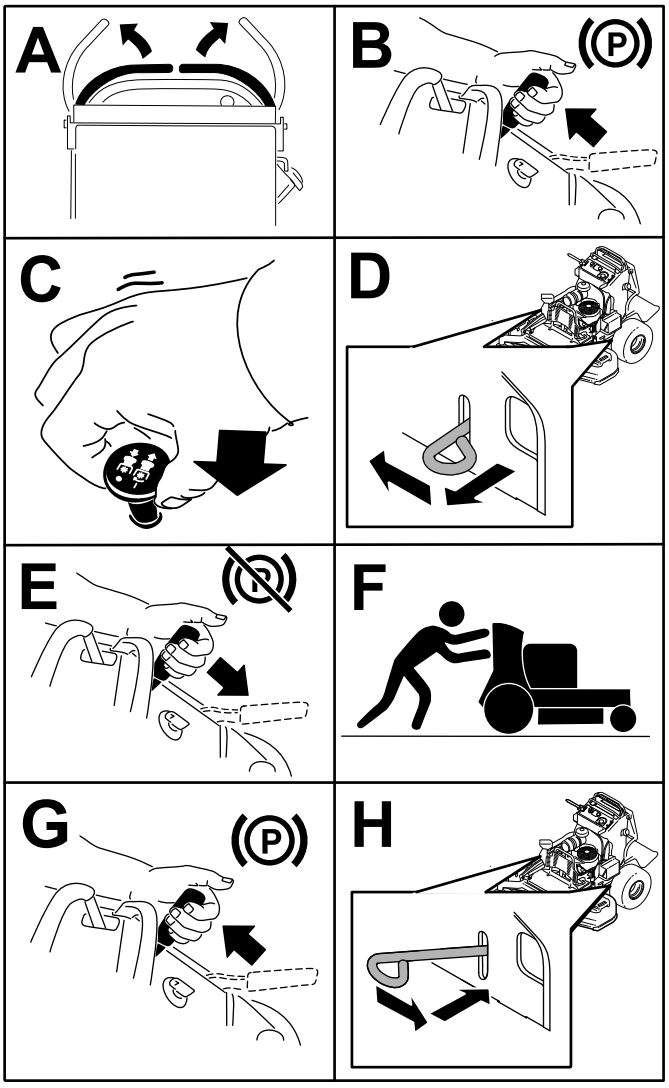

G030984
g030984

Figure 23

Transporting the Machine

Use a heavy-duty trailer or truck to transport the machine. Ensure that the trailer or truck has all the necessary brakes, lighting, and marking as required by law. Please carefully read all the safety instructions.

1. Raise the platform of the machine before driving onto the trailer or truck.
2. If using a trailer, connect it to the towing vehicle and connect the safety chains.
3. If applicable, connect the trailer brakes.
4. Load the machine onto the trailer or truck.
5. Shut off the engine, remove the key, set the brake, and close the fuel valve.
6. Use the metal tie-down loops on the machine to securely fasten the machine to the trailer or truck with straps, chains, cable, or ropes (Figure 24).

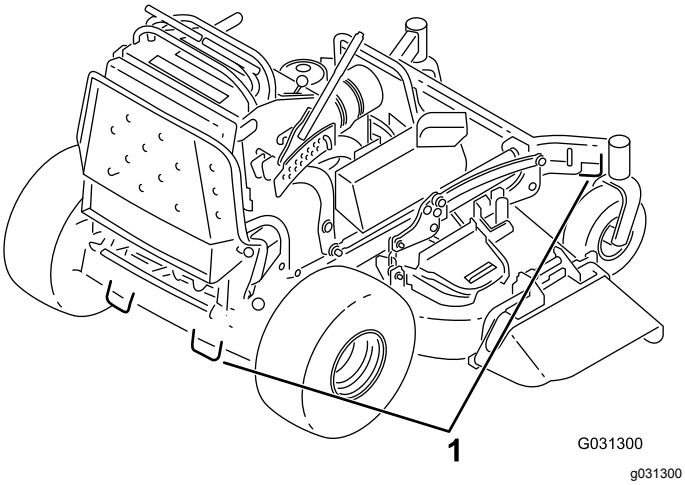

Figure 24

1. Traction unit tie-down loop

Loading the Machine

Use extreme caution when loading or unloading machines onto a trailer or a truck. Use a full-width ramp that is wider than the machine for this procedure. Back the machine up the ramp and walk it forward down the ramp (Figure 25).

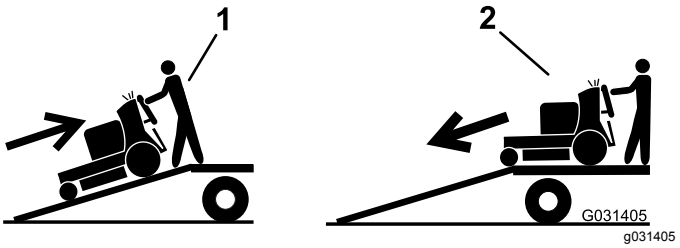

Figure 25

1. Back the machine up the ramp.
2. Walk the machine down the ramp.

Important: **Do not use narrow individual ramps for each side of the machine.**

Ensure that the ramp is long enough so that the angle with the ground does not exceed 15 degrees (Figure 26). On flat ground, this requires a ramp to be at least 4 times as long as the height of the trailer or truck bed to the ground. A steeper angle may cause mower components to get caught as the machine moves from the ramp to the trailer or truck. Steeper angles may also cause the machine to tip or lose control. If you are loading the machine on or near a slope, position the trailer or truck so that it is on the down side of the slope and the ramp extends up the slope. This will minimize the ramp angle.

⚠ WARNING

Loading a machine onto a trailer or truck increases the possibility of tip-over and could cause serious injury or death.

- **Use extreme caution when operating a machine on a ramp.**
- **Use only a full-width ramp; do not use individual ramps for each side of the machine.**
- **Do not exceed a 15-degree angle between the ramp and the ground or between the ramp and the trailer or truck.**
- **Ensure that the length of the ramp is at least 4 times as long as the height of the trailer or truck bed to the ground. This will ensure that the ramp angle does not exceed 15 degrees on flat ground.**
- **Back the machine up the ramp and walk it forward down the ramp.**
- **Avoid sudden acceleration or deceleration while driving the machine on a ramp, as this could cause a loss of control or a tip-over situation.**

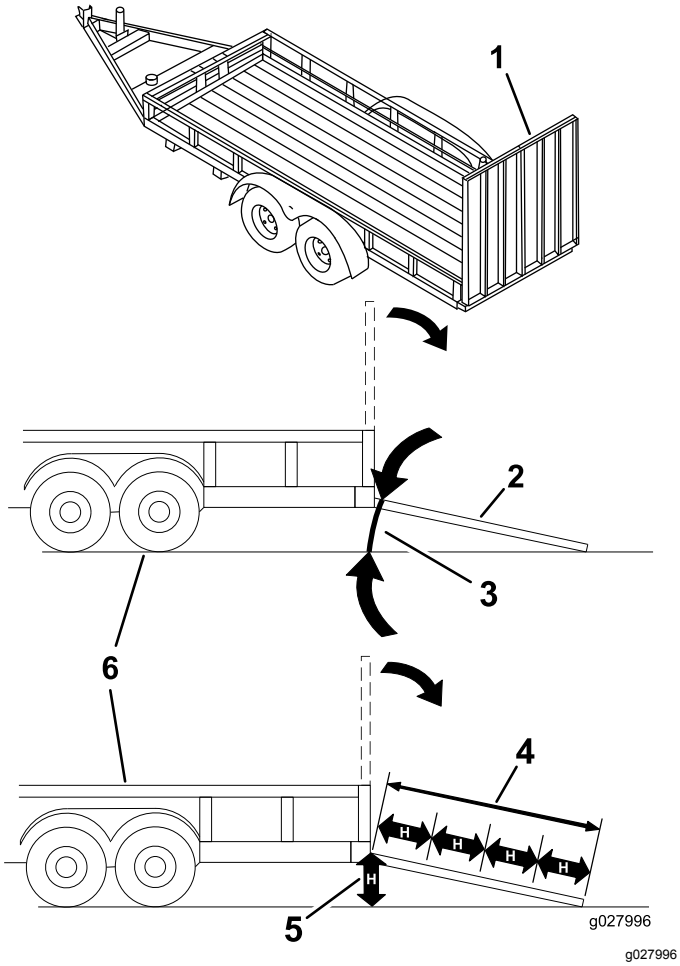

Figure 26

1. Full-width ramp in stowed position
2. Side view of full-width ramp in loading position
3. Not greater than 15 degrees
4. The ramp is at least 4 times as long as the height of the trailer or truck bed to the ground
5. H= height of the trailer or truck bed to the ground
6. Trailer

Side Discharging or Mulching the Grass

This mower has a hinged grass deflector that disperses clippings to the side and down toward the turf.

⚠ DANGER

Without the grass deflector, discharge cover, or complete grass catcher assembly mounted in place, you and others are exposed to blade contact and thrown debris. Contact with rotating mower blade(s) and thrown debris cause injury or death.

- **Do not remove the grass deflector from the mower, because the grass deflector routes material down toward the turf. If the grass deflector is ever damaged, replace it immediately.**
- **Never put your hands or feet under the mower.**
- **Never try to clear the discharge area or mower blades unless you release the bail and the power takeoff (PTO) is off. Rotate the ignition key to the OFF position. Also remove the key and disconnect the wire(s) off the spark plug(s).**

Adjusting the Height-of-Cut

The height-of-cut can be adjusted from 38 to 127 mm (1-1/2 to 5 inches) in 6 mm (1/4 inch) increments.

Note: Using a height-of-cut under 51 mm (2 inches) increases the wear on the mower-deck belt. Use a height-of-cut that is greater than 51 mm (2 inches) whenever possible.

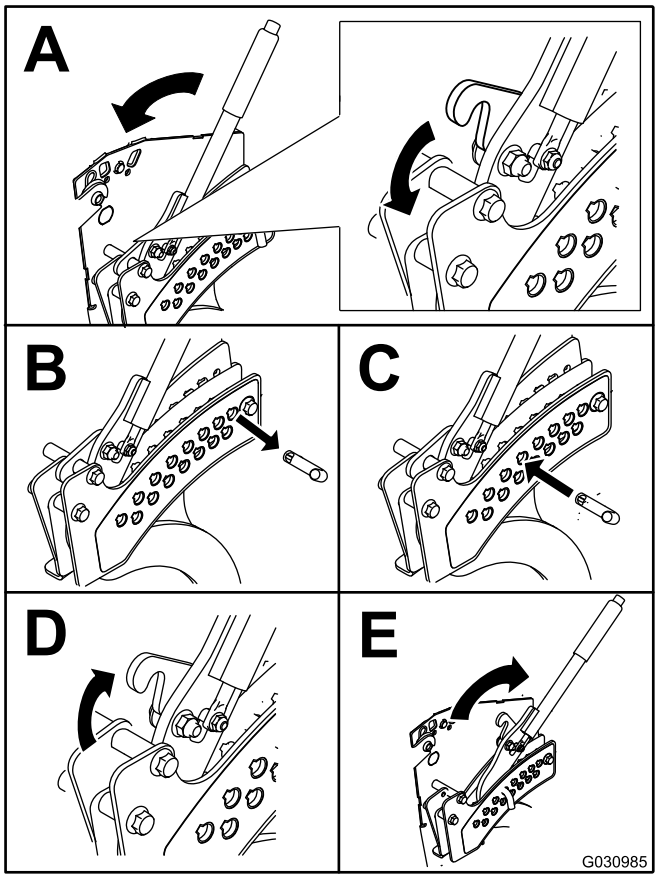

g030985

Figure 27

Adjusting the Flow Baffle

You can adjust the mower-discharge flow for different types of mowing conditions. Position the cam lock and baffle to provide the best quality of cut.

1. Disengage the PTO, move the motion-control levers to the NEUTRAL-LOCK position, and set the parking brake.
2. Shut off the engine, remove the key, and wait for all moving parts to stop before leaving the operating position.
3. To adjust the baffle, loosen the nut (Figure 28).
4. Adjust the baffle and nut in the slot to the desired discharge flow and tighten the nut.

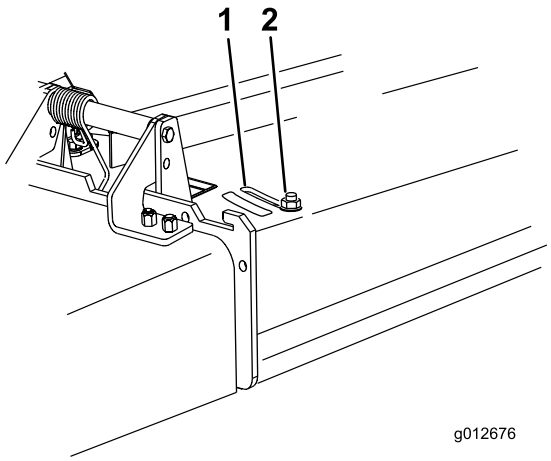

g012676

Figure 28

1. Slot
2. Nut

Positioning the Flow Baffle

The following figures are only for recommended use. Adjustments vary by grass type, moisture content, and the height of the grass.

Note: If the engine power draws down, and the mower ground speed is the same, open up the baffle.

Position A

This is the full, rear position (see Figure 29). Use this position for the following:

- In short, light grass mowing conditions
- In dry conditions
- Smaller grass clippings
- Propels grass clippings farther away from the mower

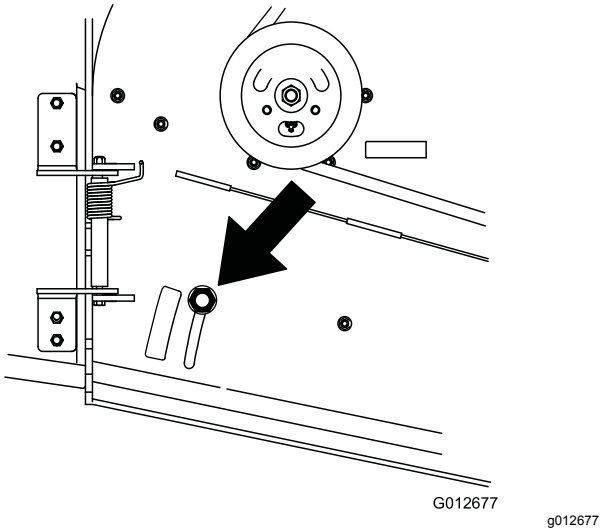

Figure 29

Position B

Use this position when bagging (Figure 30).

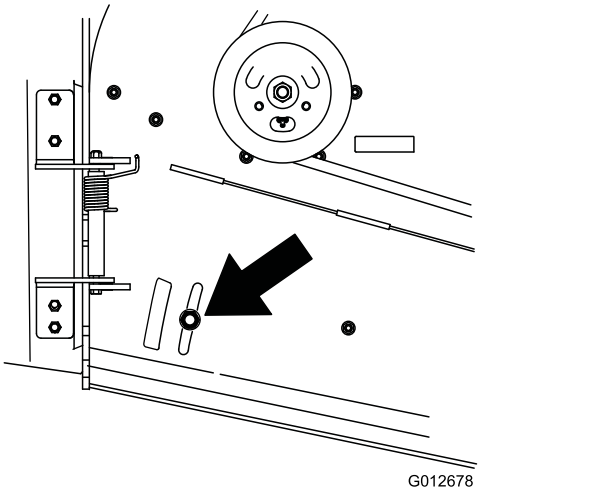

Figure 30

Position C

This is the full, open position (Figure 31). Use for this position for the following:

- In tall, dense grass mowing conditions
- In wet conditions
- Lowers the engine-power consumption
- Allows increased ground speed in heavy conditions

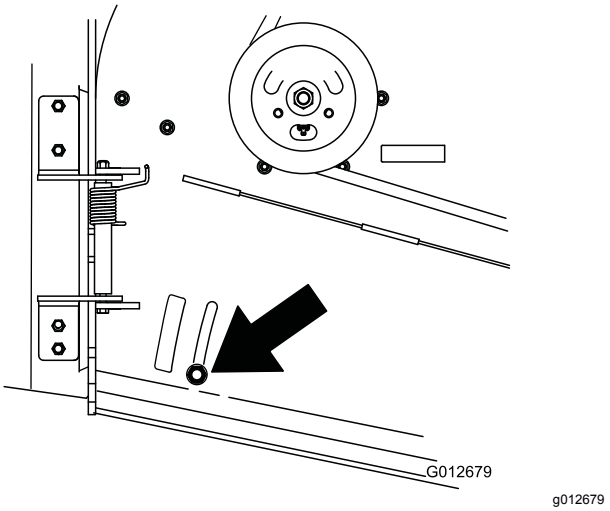

Figure 31

Using the Mid-Size Weight

- Install weights to improve balance. You can add or remove weights to create optimized performance under different mowing conditions and for your preference.
- Add or remove weights 1 at a time until you achieve the desired handling and balance.

Note: Contact an Authorized Service Dealer to order a weight kit.

⚠ WARNING

Excessive weight changes can affect the handling and operation of the machine. This could cause serious injury to you or bystanders.

- **Make weight changes in small increments only.**
- **Evaluate the mower after each weight change to ensure that you can operate the machine safely.**

Maintenance

Note: Determine the left and right sides of the machine from the normal operating position.

Recommended Maintenance Schedule(s)

Maintenance Service Interval	Maintenance Procedure
After the first 8 hours	• Change the engine oil. • Check the hydraulic-fluid level.
After the first 50 hours	• Change the hydraulic filters and hydraulic fluid.
After the first 100 hours	• Check the wheel-lug nuts. • Check the wheel-hub nuts.
Before each use or daily	• Check the safety-interlock system. • Check the engine-oil level. • Clean the air-intake screen. • Check the brakes. • Inspect the blades. • Clean the mower deck.
Every 50 hours	• Check the spark arrester (if equipped). • Check the tire pressure.
Every 100 hours	• Change the engine oil. • Check, clean and gap the spark plug. • Check the battery. • Check the clutch. • Check and clean the engine cooling fins and shrouds. • Check the mower-deck belt.
Every 200 hours	• Change the engine-oil filter.
Every 250 hours	• Replace the primary air filter. • Check the secondary air filter.
Every 300 hours	• Check and adjust the valve clearance. See an Authorized Service Dealer.
Every 500 hours	• Replace the secondary air filter. • Adjust the caster-pivot bearing. • Check the wheel-hub nuts. • Check the hydraulic-fluid level. • Change the hydraulic filters and hydraulic fluid.
Every 800 hours	• Replace the fuel filter.
Every 1,000 hours	• Replace the transmission belt.
Before storage	• Paint chipped surfaces. • Perform all maintenance procedures listed above before storage.
Yearly	• Grease the torsion idler. • Grease the front caster pivots (more often in dirty or dusty conditions). • Grease the caster-wheel hubs. • Grease the motion controls. • Apply anti-seize compound to the cushion knobs.

Important: **Refer to your engine owner's manual for additional maintenance procedures.**

⚠ CAUTION

If you leave the key in the ignition switch, someone could accidently start the engine and seriously injure you or other bystanders.

Remove the key from the ignition and disconnect the spark-plug wires from the spark plugs before you do any maintenance. Set the wires aside so that they do not accidentally contact the spark plugs.

Pre-Maintenance Procedures

Releasing the Cushion for Rear Access

You can release the cushion for rear access to the machine for maintenance or adjustment.

1. Lower the platform.
2. Loosen the twist knobs on each side of the machine (Figure 32).

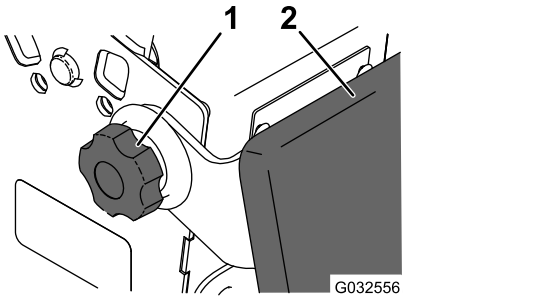

g032556

Figure 32

1. Twist knob
2. Cushion

3. Remove the cushion and lower it to the platform.
4. Perform any maintenance or adjustment on the machine.
5. Raise the cushion, and slide it onto the pins on both sides of the machine.
6. Tighten the twist knobs.

Lubrication

1. Disengage the PTO and set the parking brake.
2. Shut off the engine, remove the key, and wait for all moving parts to stop before leaving the operating position.
3. Clean the grease fittings with a rag.

   Note: Make sure to scrape any paint off the front of the fitting(s).
4. Connect a grease gun to the fitting.
5. Pump grease into the fittings until grease begins to ooze out of the bearings.
6. Wipe up any excess grease.

Greasing the Torsion Idler

Service Interval: Yearly

Grease the torsion idler on the mower deck using high-temperature grease at the grease fitting shown in Figure 33.

Important: **Use only high-temperature grease.**

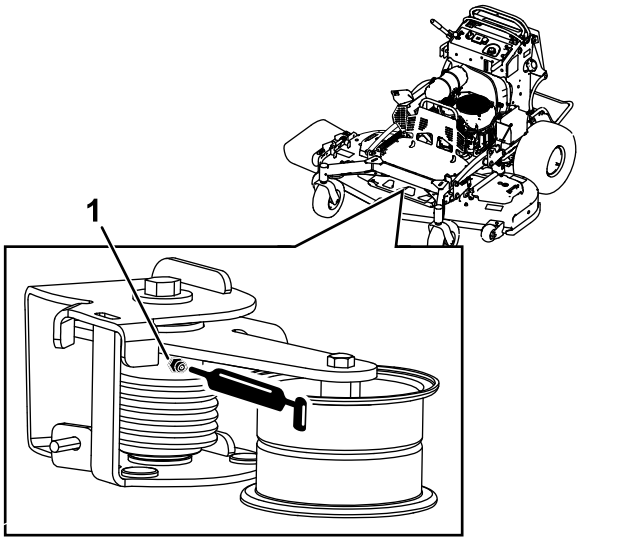

g235669

Figure 33

1. Grease fitting

Greasing the Front Caster Pivots

Service Interval: Yearly

1. Remove the dust cap and adjust the caster pivots; refer to Adjusting the Caster-Pivot Bearing (page 42).

   Note: Keep the dust cap off until you have finished greasing the caster pivots.
2. Remove the hex plug.
3. Thread a grease fitting into the hole.
4. Pump grease into the fitting until it oozes out around the top bearing.
5. Remove the grease fitting from the hole.
6. Install the hex plug and dust cap.

Greasing the Caster-Wheel Hubs

Service Interval: Yearly

1. Shut off the engine, wait for all moving parts to stop, engage the parking brake, and remove the key.
2. Remove the caster wheel from the caster forks.
3. Remove the seal guards from the wheel hub (Figure 34).

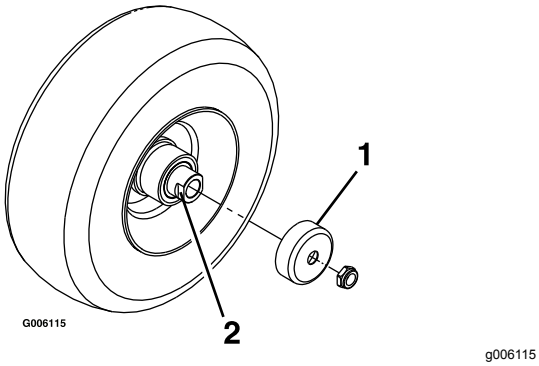

g006115

Figure 34

1. Seal guard
2. Spacer nut with wrench flats

4. Remove 1 spacer nut from the axle assembly in the caster wheel.

   Note: Thread-locking adhesive has been applied to lock the spacer nuts to the axle. Remove the axle (with the other spacer nut still assembled to it) from the wheel assembly.
5. Pry out the seals, inspect bearings for wear or damage, and replace them if necessary.
6. Pack the bearings with a general-purpose grease.
7. Insert 1 bearing and 1 new seal into the wheel.

   Note: You must replace the seals.
8. If both spacer nuts in the axle assembly have been removed (or broken loose), apply a thread-locking adhesive to 1 spacer nut, threading it onto the axle with the wrench flats facing outward.

   Note: Do not thread spacer nut all of the way onto the end of the axle. Leave approximately 3 mm (1/8 inch) from the outer surface of the spacer nut to the end of the axle inside the nut.
9. Insert the assembled nut and axle into the wheel on the side of the wheel with the new seal and bearing.
10. With the open end of the wheel facing up, fill the area inside the wheel around the axle full of general-purpose grease.
11. Insert the second bearing and the new seal into the wheel.
12. Apply a thread-locking adhesive to the second spacer nut, threading it onto the axle with the wrench flats facing outward.
13. Torque the nut to 8 to 9 N·m (71 to 80 in-lb), loosen it, then torque it to 2 to 3 N·m (20 to 25 in-lb).

    Note: Make sure that axle does not extend beyond either nut.
14. Install the seal guards over the wheel hub and insert wheel into caster fork.
15. Install the caster bolt and tighten the nut fully.

Important: **To prevent seal and bearing damage, check the bearing adjustment often by spinning the caster tire. The tire should not spin freely (more than 1 or 2 revolutions) or have any side play. If the wheel spins freely, adjust the torque on the spacer nut until there is a slight amount of drag, and apply thread-locking adhesive.**

Greasing the Motion Controls

Service Interval: Yearly

Grease the operator-presence-control balljoint and the motion-control bushing for both levers.

Note: Use an oil drip between the lever brackets to grease the bushing, located in the pivot tube.

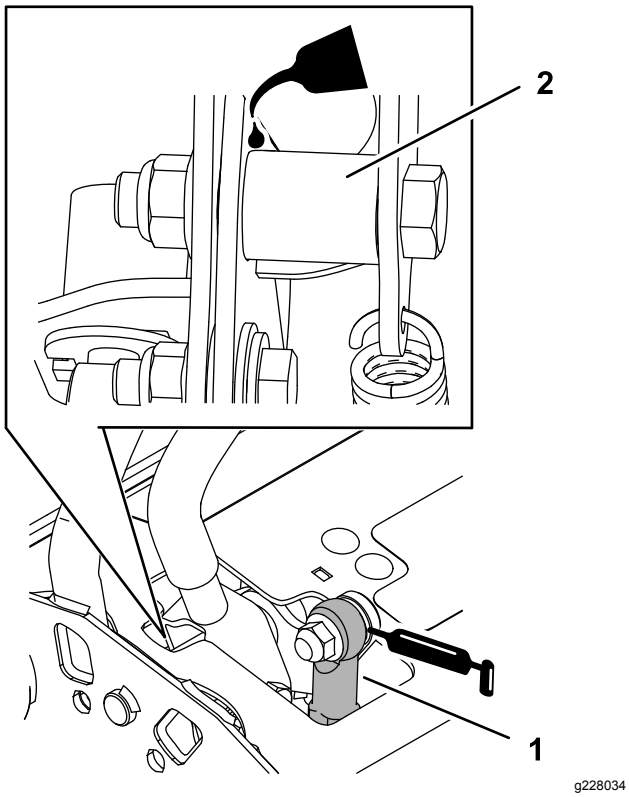

Figure 35

1. Operator-presence control balljoint
2. Pivot tube

Engine Maintenance

Servicing the Air Cleaner

Service Interval: Every 300 hours

Every 250 hours—Replace the primary air filter.

Every 250 hours—Check the secondary air filter.

Every 500 hours—Replace the secondary air filter.

Note: Service the air cleaner more frequently if operating conditions are extremely dusty or sandy.

Removing the Filters

1. Disengage the PTO, move the motion-control levers to the NEUTRAL-LOCK position, and set the parking brake.
2. Shut off the engine, remove the key, and wait for all moving parts to stop before leaving the operating position.
3. Push down to release the retaining clamps on the air cleaner and pull the air-cleaner cover off the air-cleaner body (Figure 36).
4. Clean the inside of the air-cleaner cover with compressed air.
5. Gently slide the primary filter out of the air-cleaner body (Figure 36).

   Note: Avoid knocking the filter into the side of the body.
6. Remove the secondary filter only if you intend to replace it.

   Important: **Never attempt to clean the secondary filter. If the secondary filter is dirty, then the primary filter is damaged and you should replace both filters.**
7. Inspect the primary filter for damage by looking into the filter while shining a bright light on the outside of the filter.

   Note: Holes in the filter appear as bright spots.

   Note: Discard the filter if it is damaged.

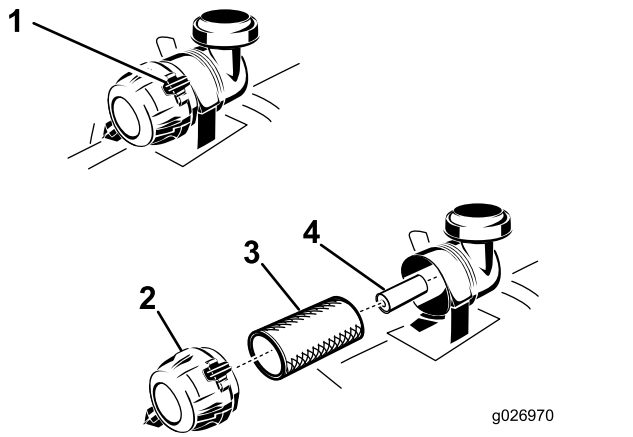

Figure 36

1. Air-cleaner clamps
2. Air-cleaner cover
3. Primary air filter
4. Secondary air filter

Servicing the Primary Filter

1. Inspect the element for tears, an oily film, or damage to the rubber seal.
2. Replace the paper element if it is damaged.

   Note: Do not clean the paper element.

Servicing the Secondary Filter

Do not clean the secondary filter, replace it.

Important: **Do not attempt to clean the secondary filter. If the secondary filter is dirty, then the primary filter is damaged and you should replace both filters.**

Installing the Filters

Important: **To prevent engine damage, always operate the engine with both air filters and the cover installed.**

1. If installing new filters, check each filter for shipping damage.

   Note: Do not use a damaged filter.
2. If the secondary filter is being replaced, carefully slide it into the filter body (Figure 36).
3. Carefully slide the primary filter over the secondary filter (Figure 36).
4. Ensure that it is fully seated by pushing on the outer rim of the filter while installing it.

   Important: **Do not press on the soft inside area of the filter.**
5. Install the air-cleaner cover with the breather cap down, and rotate so that the retaining clamps lock the cover in place (Figure 36).

Servicing the Engine Oil

Engine-Oil Specifications

Oil Type:: Detergent oil (API service SF, SG, SH, SJ or SL)

Engine Oil Capacity: 2.1 L (71 fl oz) with the filter; 1.8 L (61 fl oz) without the filter

Viscosity: Refer to the table below.

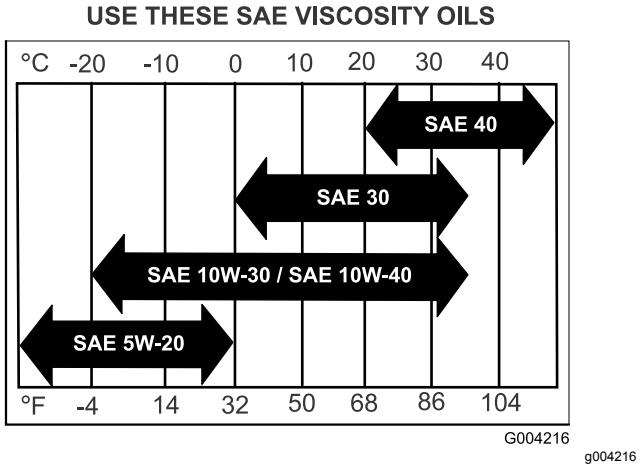

Figure 37

Checking the Engine-Oil Level

Service Interval: Before each use or daily

Note: Check the oil when the engine is cold.

⚠ WARNING

Contact with hot surfaces may cause personal injury.

Keep your hands, feet, face, clothing and other body parts away the muffler and other hot surfaces.

Important: **Do not overfill the crankcase with oil because damage to the engine may result. Do not run engine with oil below the low mark because the engine may be damaged.**

1. Park the machine on a level surface, disengage the PTO, and engage the parking brake.
2. Shut off the engine, remove the key, and wait for all moving parts to stop before leaving the operating position.
3. Check the engine-oil level as shown in (Figure 38).

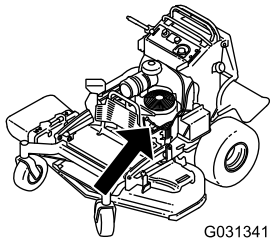

g031341

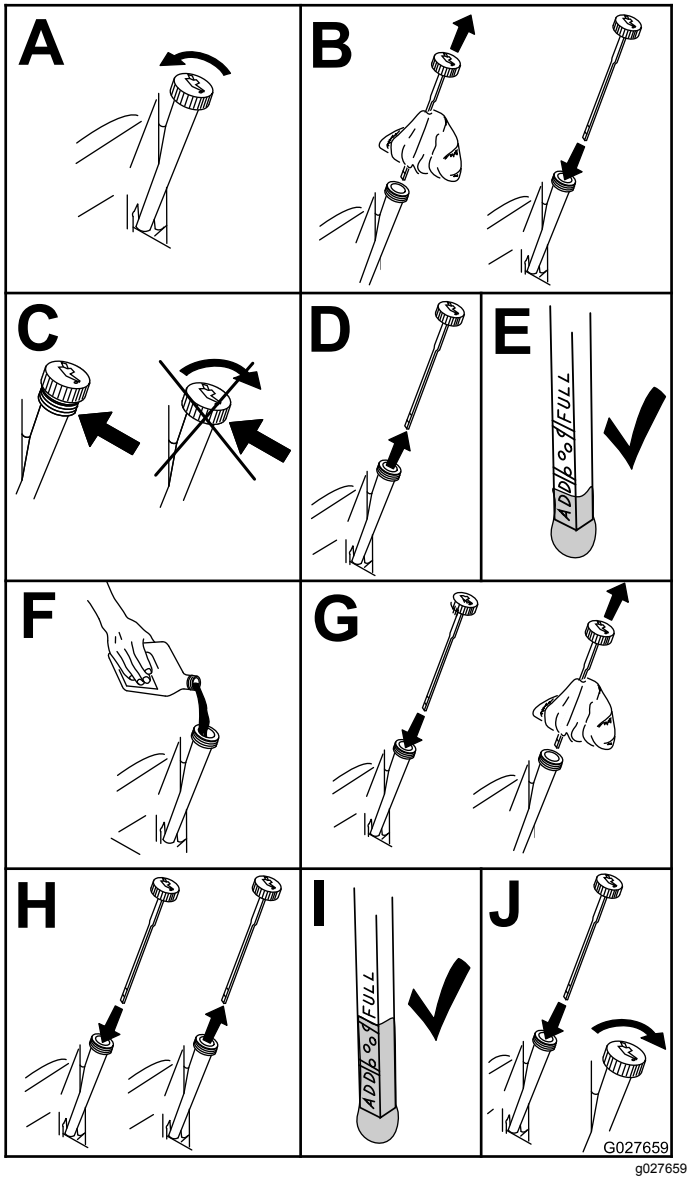

g027659

Figure 38

Changing the Engine Oil

Service Interval: After the first 8 hours

Every 100 hours

Note: Dispose of the used oil at a recycling center.

1. Park the machine so that the drain side is slightly lower than the opposite side to assure the oil drains completely.
2. Disengage the PTO, move the motion-control levers to the NEUTRAL-LOCK position, and engage the parking brake.
3. Shut off the engine, remove the key, and wait for all moving parts to stop before leaving the operating position.
4. Change the engine oil as shown in Figure 39.

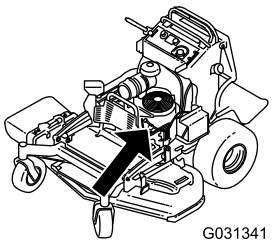

g031341

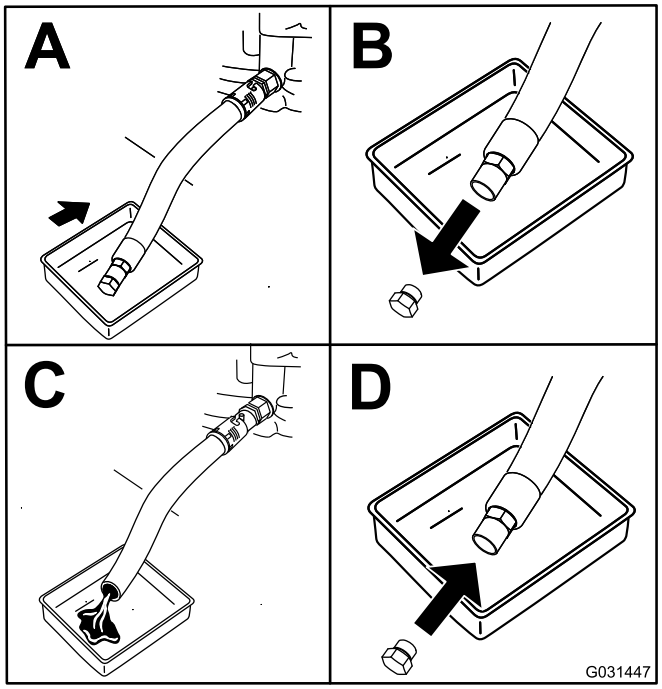

g031447

Figure 39

5. Slowly pour approximately 80% of the specified oil into the filler tube and slowly add the additional oil to bring it to the **Full** mark (Figure 40).

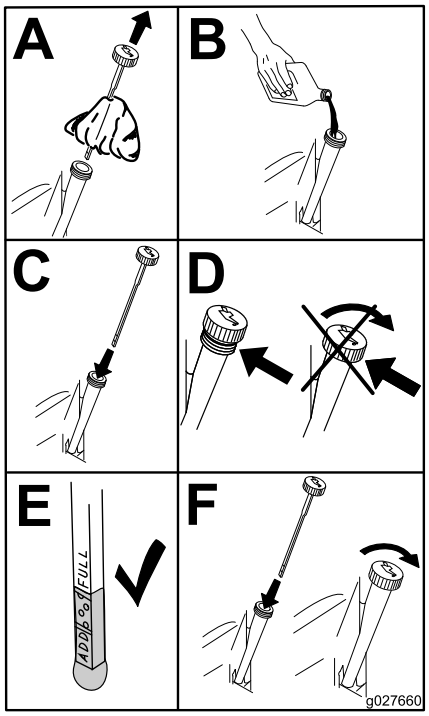

g027660

Figure 40

6. Start the engine and drive to a flat area.
7. Check the oil level again.

Changing the Engine-Oil Filter

Service Interval: Every 200 hours

Note: Change the engine-oil filter more frequently when operating conditions are extremely dusty or sandy.

1. Drain the oil from the engine; refer to Changing the Engine-Oil Filter (page 35).
2. Change the engine-oil filter (Figure 41).

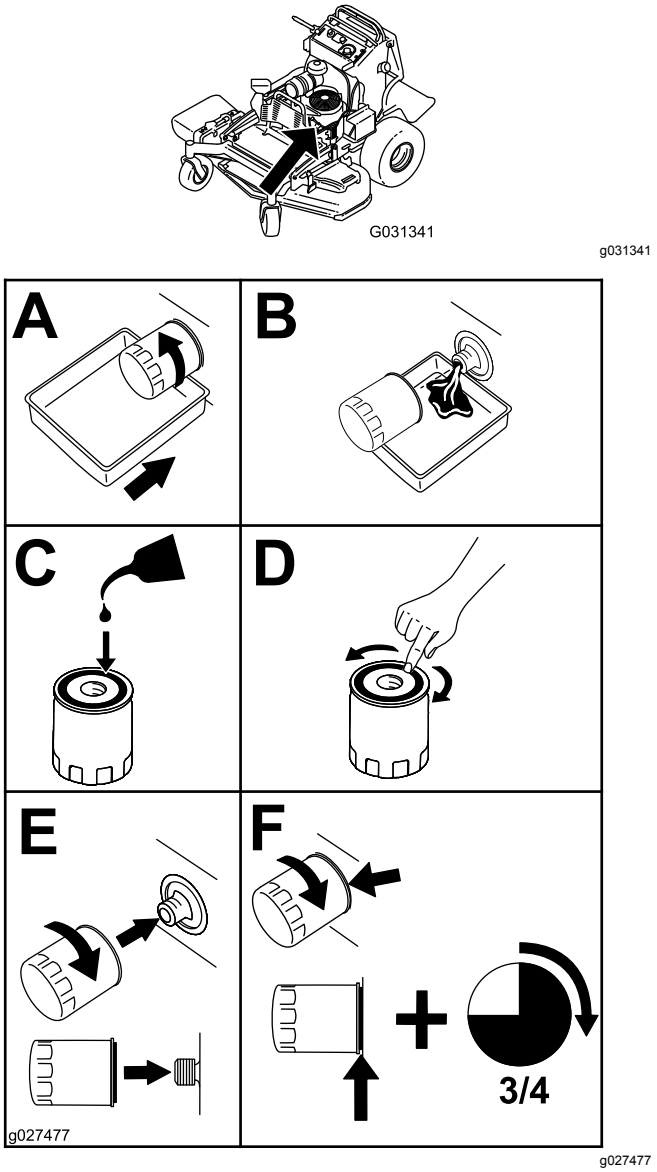

g027477

Figure 41

Note: Ensure that the oil-filter gasket touches the engine, then rotate the filter an extra 3/4 turn.

3. Fill the crankcase with the proper type of new oil; refer to Engine-Oil Specifications (page 33).

Servicing the Spark Plug

Service Interval: Every 100 hours

Make sure that the air gap between the center and side electrodes is correct before installing the spark plug.

Use a spark plug wrench for removing and installing the spark plug(s) and a gapping tool/feeler gauge to check and adjust the air gap. Install a new spark plug(s) if necessary.

Type for all Engines: NGK® BPR4ES or equivalent

Air Gap: 0.75 mm (0.03 inch)

Removing the Spark Plugs

1. Disengage the PTO, move the motion-control levers to the NEUTRAL-LOCK position, and set the parking brake.
2. Shut off the engine, remove the key, and wait for all moving parts to stop before leaving the operating position.
3. Remove the spark plugs as shown in Figure 42.

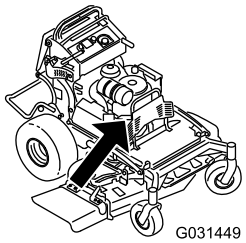

g031449

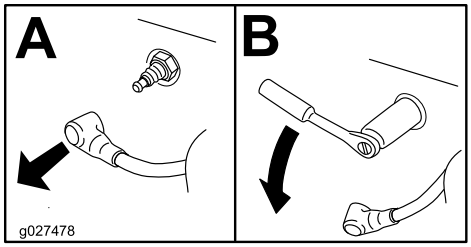

g027478

Figure 42

Checking the Spark Plug

Important: **Do not clean the spark plug(s). Always replace the spark plug(s) when it has a black coating, worn electrodes, an oily film, or cracks.**

If you see light brown or gray on the insulator, the engine is operating properly. A black coating on the insulator usually means the air cleaner is dirty.

Set the gap to 0.75 mm (0.03 inch).

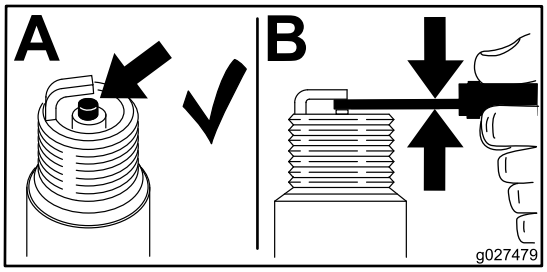

g027479

Figure 43

Installing the Spark Plug

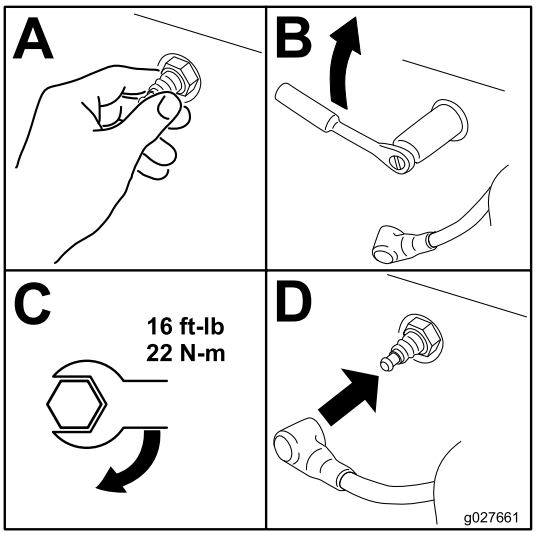

g027661

Figure 44

Checking the Spark Arrester

If Equipped

Service Interval: Every 50 hours

⚠ WARNING

Hot exhaust-system components may ignite gasoline vapors even after you shut off the engine. Hot particles exhausted during engine operation may ignite flammable materials, resulting in personal injury or property damage.

Do not refuel or run the engine unless the spark arrester is installed.

1. Shut off the engine, wait for all moving parts to stop, engage the parking brake, and remove the key.
2. Wait for the muffler to cool.
3. If you see any breaks in the screen or welds, replace the arrester.
4. If the screen is plugged, remove the arrester, shake loose particles out of the arrester, and clean the screen with a wire brush (soak the screen in solvent if necessary).
5. Install the arrester on the exhaust outlet.

Fuel System Maintenance

Draining the Fuel Tank

You can drain the fuel tank by removing it and pouring the fuel out of the fill neck; refer to Removing the Fuel Tank (page 38). You can also drain the fuel tank by using a siphon in the following procedure.

⚠ DANGER

In certain conditions, gasoline is extremely flammable and highly explosive. A fire or explosion from gasoline can burn you and others and can damage property.

- **Drain gasoline from the fuel tank when the engine is cold. Do this outdoors in an open area. Wipe up any gasoline that spills.**
- **Never smoke when draining gasoline, and stay away from an open flame, or where a spark may ignite the gasoline fumes.**

1. Disengage the PTO, move the motion-control levers to the NEUTRAL-LOCK position, and set the parking brake.
2. Shut off the engine, remove the key, and wait for all moving parts to stop before leaving the operating position.
3. Clean around the fuel cap to prevent debris from getting into the fuel tank (Figure 45).
4. Remove the fuel cap.
5. Insert a syphon pump into the fuel tank.
6. Using the syphon pump, drain the fuel into a clean gas can (Figure 45).
7. Wipe up any spilled fuel.

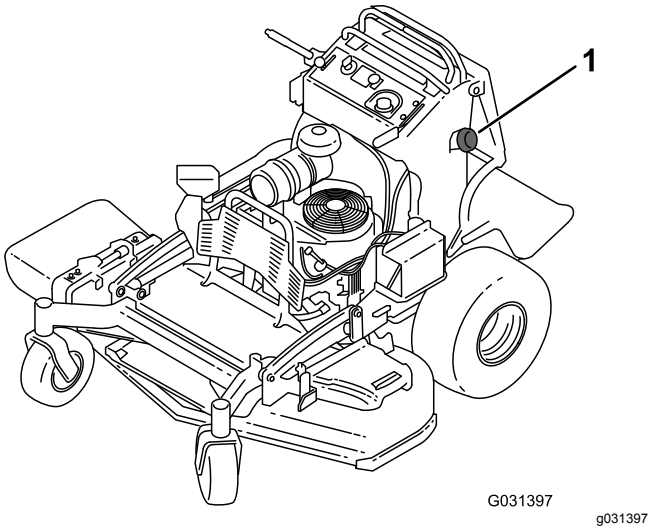

Figure 45

1. Fuel cap

Removing the Fuel Tank

1. Lower the platform.
2. Release the cushion; refer to Releasing the Cushion for Rear Access (page 30).
3. Remove the cross bracket.

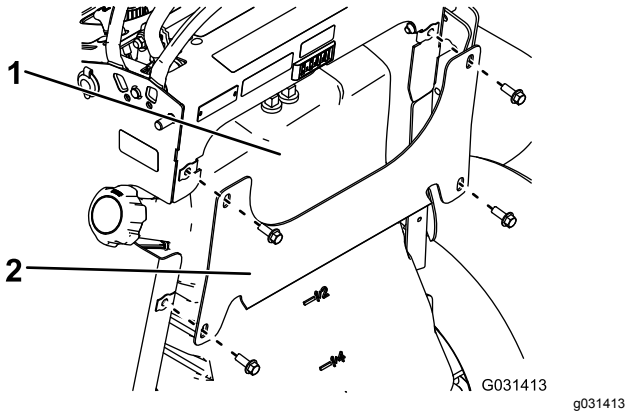

Figure 46

4. Remove the fuel tank and set it on the operator platform.

   Note: If you want to move the fuel tank further from the machine, remove the fuel and vent lines from the top of the tank.

Servicing the Fuel Filter

Replacing the Fuel Filter

Service Interval: Every 800 hours/Yearly (whichever comes first)

Do not install a dirty filter if it is removed from the fuel line.

Note: Wipe up any spilled fuel.

1. Disengage the PTO and set the parking brake.
2. Shut off the engine, remove the key, and wait for all moving parts to stop before leaving the operating position.
3. Close the fuel-shutoff valve; refer to Using the Fuel-Shutoff Valve (page 18).
4. Replace the fuel filter as shown in Figure 47.

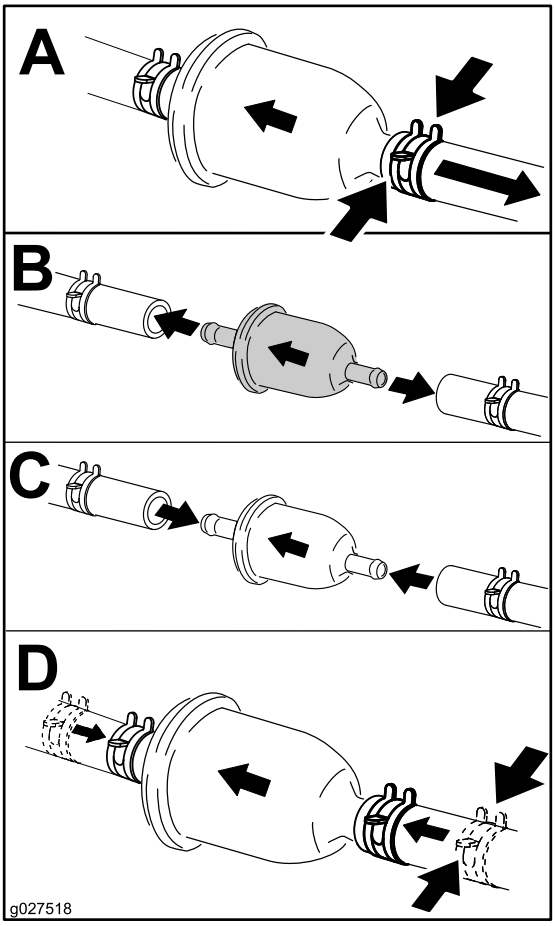

Figure 47

Electrical System Maintenance

Servicing the Battery

Service Interval: Every 100 hours

Always keep the battery clean and fully charged. Use a paper towel to clean the battery case. If the battery terminals are corroded, clean them with a solution of 4 parts water and 1 part baking soda. Apply a light coating of grease to the battery terminals to prevent corrosion.

Voltage: 12 V

⚠ WARNING

CALIFORNIA
Proposition 65 Warning

Battery posts, terminals, and related accessories contain lead and lead compounds, chemicals known to the State of California to cause cancer and reproductive harm. Wash hands after handling.

⚠ DANGER

Do not drink electrolyte, and avoid contact with skin, eyes or clothing. Wear safety glasses to shield your eyes and rubber gloves to protect your hands.

Battery electrolyte contains sulfuric acid, a deadly poison that causes severe burns.

Removing the Battery

⚠ WARNING

Battery terminals or metal tools could short against metal machine components, causing sparks. Sparks can cause the battery gasses to explode, resulting in personal injury.

- **When removing or installing the battery, do not allow the battery terminals to touch any metal parts of the machine.**
- **Do not allow metal tools to short between the battery terminals and metal parts of the machine.**

⚠ WARNING

Incorrect battery-cable routing could damage the machine and cables, causing sparks. Sparks can cause the battery gasses to explode, resulting in personal injury.

- **Always disconnect the negative (black) battery cable before disconnecting the positive (red) cable.**
- **Always connect the positive (red) battery cable before connecting the negative (black) cable.**

1. Disengage the PTO and set the parking brake.
2. Shut off the engine, remove the key, and wait for all moving parts to stop before leaving the operating position.
3. Remove the battery as shown in Figure 48.

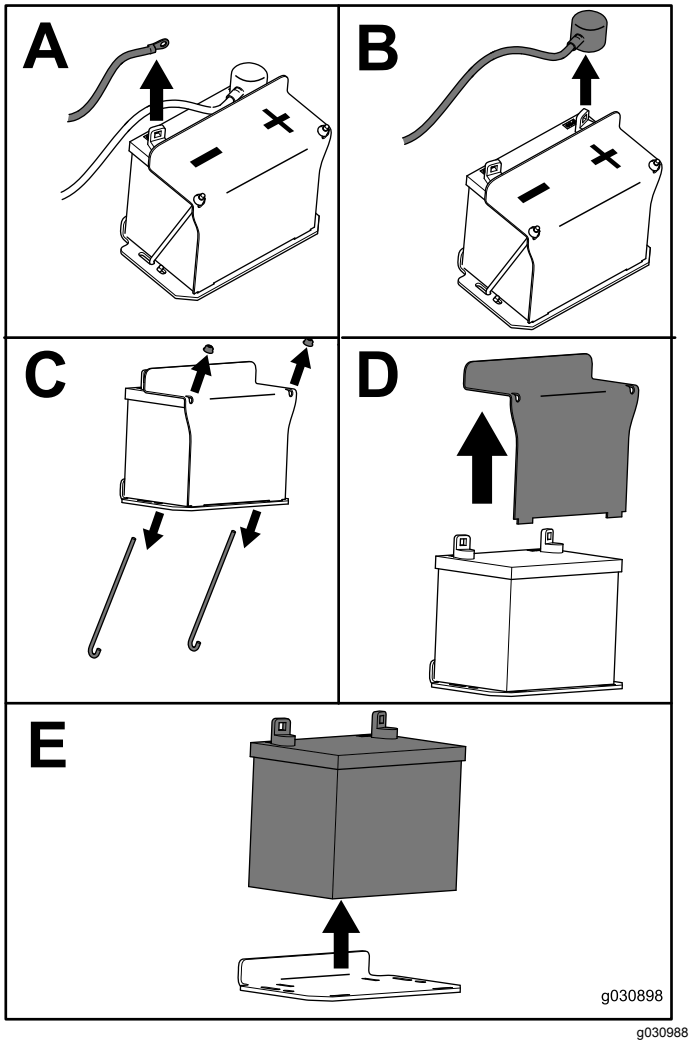

g030988

Figure 48

Installing the Battery

Install the battery as shown in Figure 49.

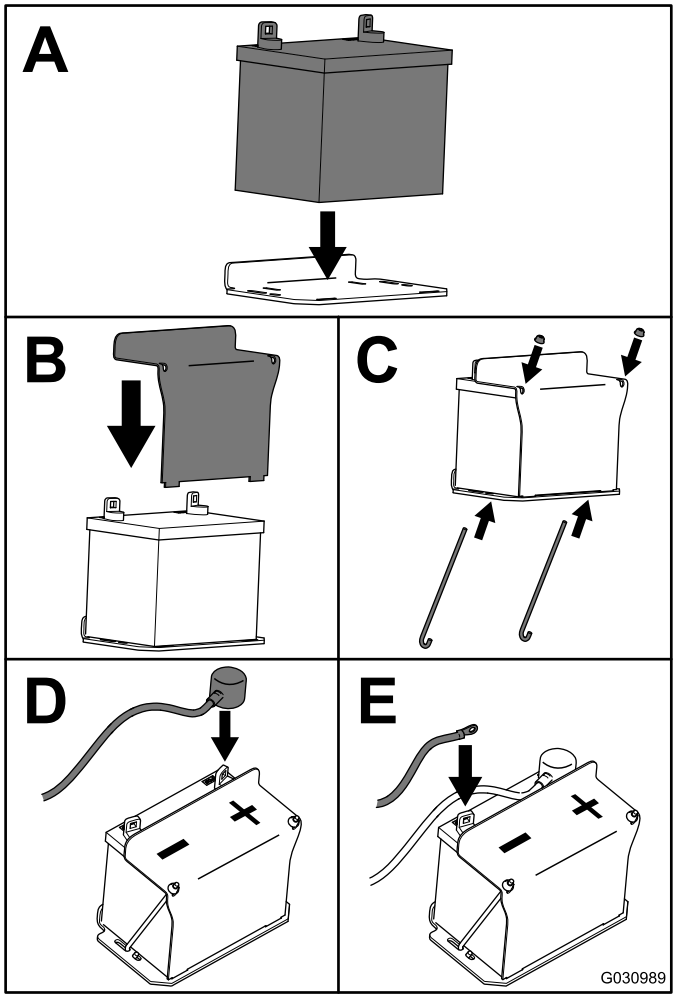

Figure 49

Charging the Battery

⚠ WARNING

Charging the battery produces gasses that can explode.

Never smoke near the battery and keep sparks and flames away from battery.

Important: **Always keep the battery fully charged (1.265 specific gravity) to prevent battery damage when the temperature is below 0°C (32°F).**

1. Remove the battery from the chassis; refer to Removing the Battery (page 39).
2. Check the electrolyte level.
3. Ensure that the filler caps are installed on the battery.
4. Charge the battery for 1 hour at 25 to 30 A or 6 hours at 4 to 6 A.
5. When the battery is fully charged, unplug the charger from the electrical outlet, and disconnect the charger leads from the battery posts (Figure 50).
6. Install the battery onto the machine and connect the battery cables; refer to Installing the Battery (page 40).

   Note: Do not run the machine with the battery disconnected; electrical damage may occur.

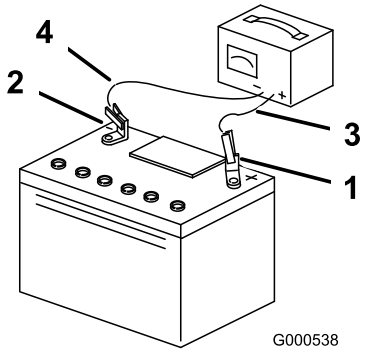

Figure 50

1. Positive battery post
2. Negative battery post
3. Red (+) charger lead
4. Black (-) charger lead

Servicing the Fuses

The electrical system is protected by fuses and requires no maintenance. If a fuse blows, check the component or circuit for a malfunction or short.

1. Release the cushion from the rear of the machine.
2. Pull out the fuse to remove or replace it (Figure 51).
3. Install the cushion to the rear of the machine.

   Note: Ensure that the correct-size fuse is installed Figure 51.

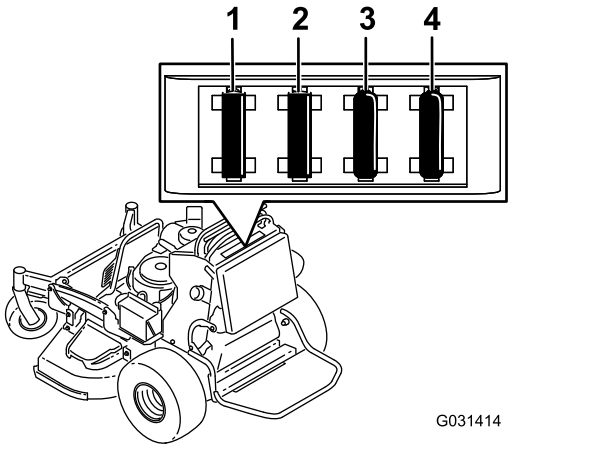

Figure 51

1. Ignition fuse—15 A
2. Accessory-port fuse—15 A
3. Power takeoff (PTO) fuse—10 A
4. Infocenter fuse—7.5 A

Drive System Maintenance

Adjusting the Tracking

Note: Determine the left and right sides of the machine from the normal operating position.

1. Push both control levers forward the same distance.
2. Check if the machine pulls to 1 side.

   Note: If it does, stop the machine and set the parking brake.
3. Release the cushion from the rear of the machine; refer to Releasing the Cushion for Rear Access (page 30).

   Note: For easier access, you can also remove the fuel tank; refer to Removing the Fuel Tank (page 38).
4. Rotate the left control rod in quarter-turn increments until the machine tracks straight (Figure 52).

   Note: If the machine pulls to the right, shorten the control rod by rotating it to the right. If the machine pulls to the left, lengthen the rod by rotating it to the left.

   Note: Only adjust the left control rod to match the left wheel speed to the right wheel speed. Do not adjust the right wheel speed, as this positions the right motion-control lever out of the center for the control panel neutral-lock slot.

   Important: **Do not rotate the control rod too far, as this may cause the machine to creep in neutral.**

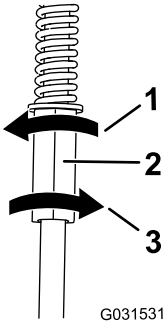

Figure 52

1. Rotate left to lengthen the rod.
2. Left control rod
3. Rotate right to shorten the rod.

5. Check for proper tracking, and adjust the rod as necessary.

Note: If you are unable to achieve proper tracking by adjusting the left control rod, contact your Authorized Service Dealer.

6. Check that the machine does not creep from the neutral position with the park brakes disengaged.
7. Install the fuel tank, if you removed it.
8. Install the cushion.

Checking the Tire Pressure

Service Interval: Every 50 hours/Monthly (whichever comes first)

Maintain the air pressure in the rear tires at 83 to 97 kPa (12 to 14 psi).

Important: **Uneven tire pressure can cause an uneven cut.**

Note: The front tires are semi-pneumatic tires and do not require air-pressure maintenance.

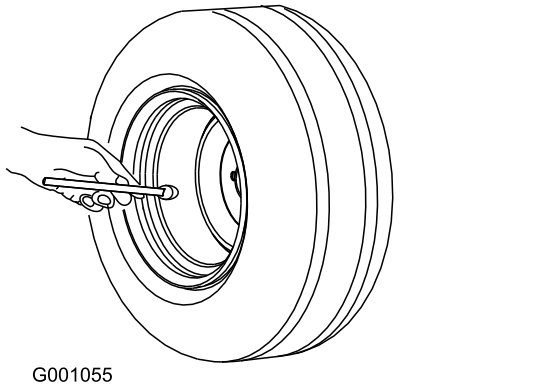

Figure 53

Adjusting the Caster-Pivot Bearing

Service Interval: Every 500 hours/Yearly (whichever comes first)

1. Disengage the blade-control switch (PTO), move the motion-control levers to the NEUTRAL-LOCK position, and set the parking brake.
2. Shut off the engine, remove the key, and wait for all moving parts to stop before leaving the operating position.
3. Remove the dust cap from the caster and tighten the locknut (Figure 54).
4. Tighten the locknut until the spring washers are flat, and then back off a 1/4 turn to properly set the preload on the bearings (Figure 54).

   Important: **Make sure that the spring washers are installed correctly as shown in Figure 54.**
5. Install the dust cap (Figure 54).

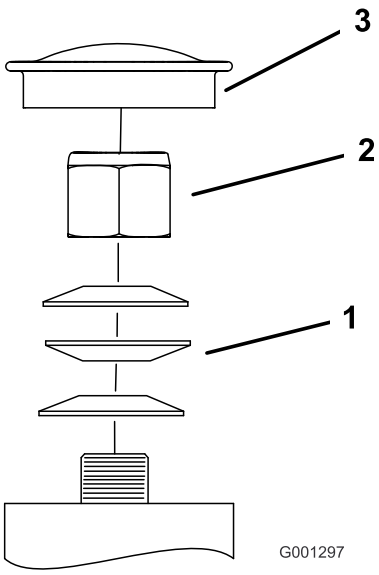

Figure 54

1. Spring washers
2. Locknut
3. Dust cap

Servicing the Caster Wheels and Bearings

The caster wheels rotate on a roller bearing supported by a spanner bushing. If the bearing is kept well lubricated, wear will be minimal. Failure to keep the bearing well lubricated causes rapid wear. A wobbly caster wheel usually indicates a worn bearing.

1. Remove the locknut and wheel bolt holding the caster wheel to the caster fork (Figure 55).

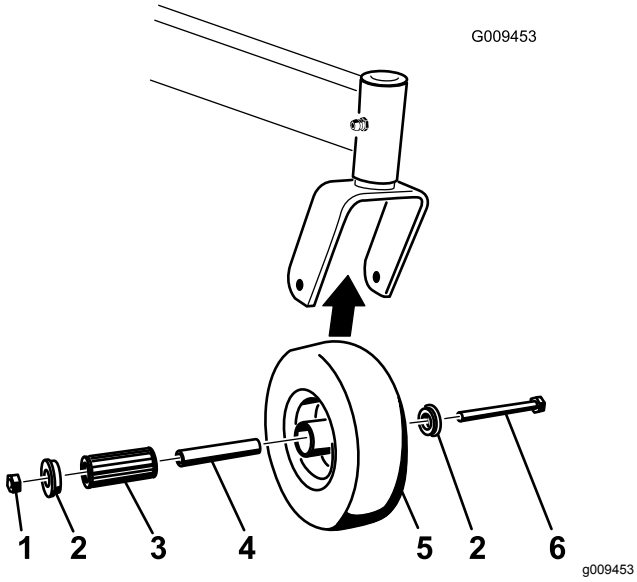

Figure 55

1. Locknut
2. Wheel bolt
3. Bushing
4. Spanner bushing
5. Roller bearing

2. Remove 1 bushing, then pull the spanner bushing and roller bearing out of the wheel hub (Figure 55).
3. Remove the other bushing from the wheel hub and clean any grease and dirt from the wheel hub (Figure 55).
4. Inspect the roller bearing, bushings, spanner bushing and the inside of the wheel hub for wear.

   Note: Replace any damaged or worn parts (Figure 55).
5. Place 1 bushing into the wheel hub (Figure 55).
6. Grease the roller bearing and spanner bushing, and slide them into the wheel hub (Figure 55).
7. Place the second bushing into the wheel hub (Figure 55).
8. Install the caster wheel into the caster fork and secure it with the wheel bolt and locknut (Figure 55).
9. Tighten the locknut until the spanner bushing bottoms against the inside of the caster forks (Figure 55).
10. Grease the fitting on the caster wheel.

Removing the Clutch Shim

Service Interval: Every 100 hours

When the clutch brake has worn to the point where the clutch no longer engages consistently, you can remove the shim to extend the clutch life (Figure 56).

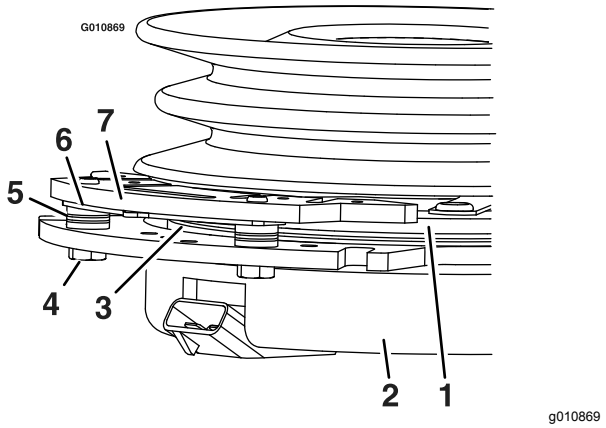

Figure 56

1. Armature
2. Field shell
3. Rotor
4. Brake-mounting bolt
5. Brake spacer
6. Shim.
7. Brake pole

1. Park the machine on a level surface, disengage the PTO, and engage the parking brake.
2. Shut off the engine, remove the key, and wait for all moving parts to stop before leaving the operating position.
3. Using an air compressor, blow out any debris under the brake pole and around the brake spacers.

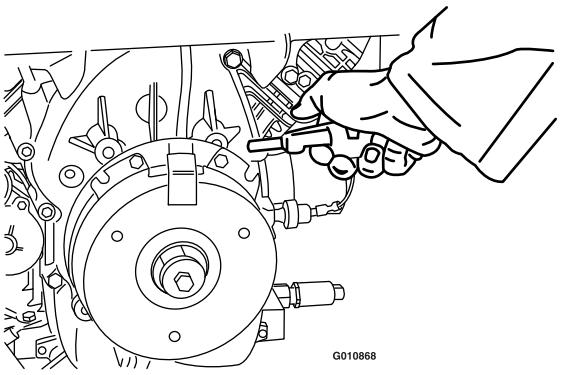

Figure 57

4. Check the condition of the wire-harness leads, connectors, and terminals. Clean or repair them as necessary.
5. Verify that 12 V is present at the clutch connector when the you engage the PTO switch.
6. Measure the gap between the rotor and armature. If the gap is greater than 1 mm (0.04 inch), proceed with the following steps:

   A. Loosen both brake mounting bolts 1/2 to 1 full turn as shown in Figure 58.

      Note: Do not remove the brake pole from the field shell/armature. The brake pole has worn to match the armature and needs to continue to match after you remove the shim to ensure the proper brake torque.

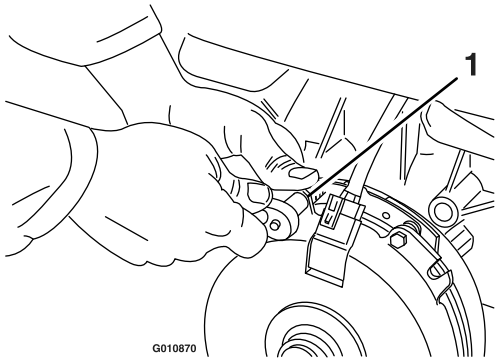

g010870

Figure 58

1. Brake-mounting bolt

   B. Using needle-nose pliers, or by hand, remove the shim.

      Note: Do not discard the shim until you confirm that the clutch functions properly.

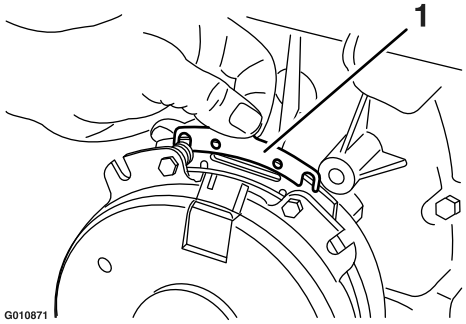

g010871

Figure 59

1. Shim

   C. Using a pneumatic line, blow out any debris under the brake pole and around the brake spacers.

   D. Torque each bolt (M6 x 1) to 12.3 to 13.7 N·m (9.5 to 10.5 ft-lb).

   E. Using a 0.010 inch thick-feeler gauge, verify that a gap is present between the rotor and armature face on both sides of the brake pole as shown in Figure 60 and Figure 61.

      Note: Due to the way the rotor and armature faces wear (peaks and valleys), it is sometimes difficult to measure the true gap.

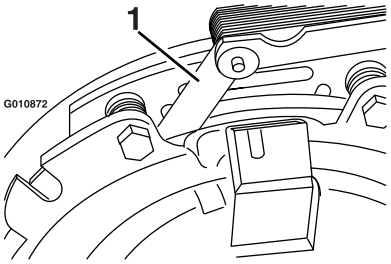

g010872

Figure 60

1. Feeler gauge

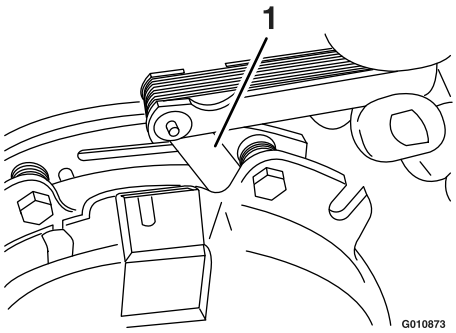

g010873

Figure 61

1. Feeler gauge

   - If the gap is less than 0.010 inch, then install the shim and refer to Troubleshooting (page 58).
   - If the gap is sufficient, proceed to the safety check in step F.

   F. Perform the following safety check:

      i. Sit on the seat and start the engine.

      ii. Make sure that the blades do not engage when the PTO switch is in the OFF position and the clutch is disengaged.

      Note: If the clutch does not disengage, install the shim, and refer to Troubleshooting (page 58).

      iii. Engage and disengage the PTO switch 10 consecutive times to ensure that the clutch is functioning properly.

Note: If the clutch does not engage properly, refer to Troubleshooting (page 58).

Checking the Wheel-Lug Nuts

Service Interval: After the first 100 hours—Check the wheel-lug nuts.

Check and torque the wheel lug nuts to 115 to 142 N·m (85 to 105 ft-lb).

Checking the Wheel-Hub Nuts

Service Interval: After the first 100 hours—Check the wheel-hub nuts.

Every 500 hours—Check the wheel-hub nuts.

Check and torque the wheel hub nuts to 286 to 352 N·m (211 to 260 ft-lb).

Cooling System Maintenance

Cleaning the Air-Intake Screen

Service Interval: Before each use or daily

Before each use, remove any buildup of grass, dirt, or other debris from the cylinder and cylinder-head cooling fins, air-intake screen on the flywheel end, and the carburetor-governor levers and linkage. This helps ensure that adequate cooling and correct engine speed, and reduces the possibility of overheating or mechanical damage to the engine.

Cleaning the Cooling System

Service Interval: Every 100 hours—Check and clean the engine cooling fins and shrouds.

1. Disengage the PTO and set the parking brake.
2. Shut off the engine, remove the key, and wait for all moving parts to stop before leaving the operating position.
3. Remove the air-intake screen and fan housing (Figure 62).
4. Clean the debris and grass from the engine parts.
5. Install the air-intake screen and fan housing (Figure 62).

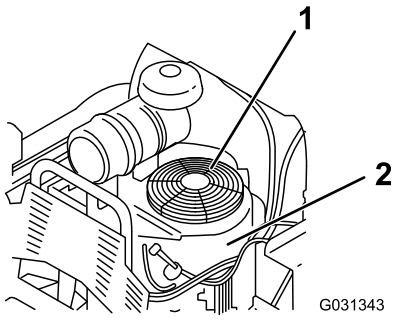

g031343

Figure 62

1. Guard and engine air-intake screen
2. Fan housing

Brake Maintenance

Servicing the Brake

Before each use, check the brakes on a level surface and slope.

Always set the parking brake when you stop the machine or leave it unattended.

Important: **If the parking brake does not hold securely, adjust it.**

Checking the Parking Brake

Service Interval: Before each use or daily

1. Park the machine on a level surface and disengage the PTO.
2. Shut off the engine, remove the key, and wait for all moving parts to stop before leaving the operating position.
3. Release the brake.
4. Engage the brake lever and ensure that the machine does not move.
5. Adjust the brake if needed.

Adjusting the Brakes

1. Remove the fuel tank; refer to Removing the Fuel Tank (page 38).
2. Loosen the bolt on the cable clamp on the left side of the machine.

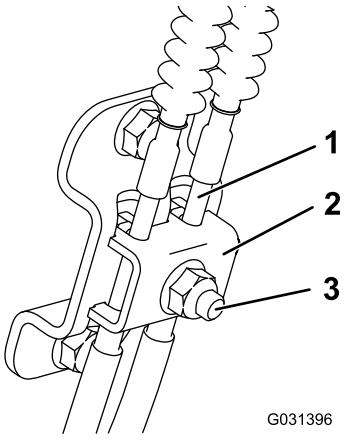

Figure 63

1. Cable
2. Cable clamp
3. Bolt and nut

3. Pull down on the cables until they are taut.
4. Tighten the nut.
5. Install the fuel tank, cross bracket, and cushion.

Belt Maintenance

Replacing the Mower-Deck Belt

Service Interval: Every 100 hours—Check the mower-deck belt.

Signs of a worn belt include squeaking when the belt is rotating, a slipping blade when cutting grass, a frayed belt edge, burn marks, and cracks. Replace the deck belt if any of these conditions are evident.

1. Disengage the PTO and set the parking brake.
2. Shut off the engine, remove the key, and wait for all moving parts to stop before leaving the operating position.
3. Replace the belt as shown in Figure 64.

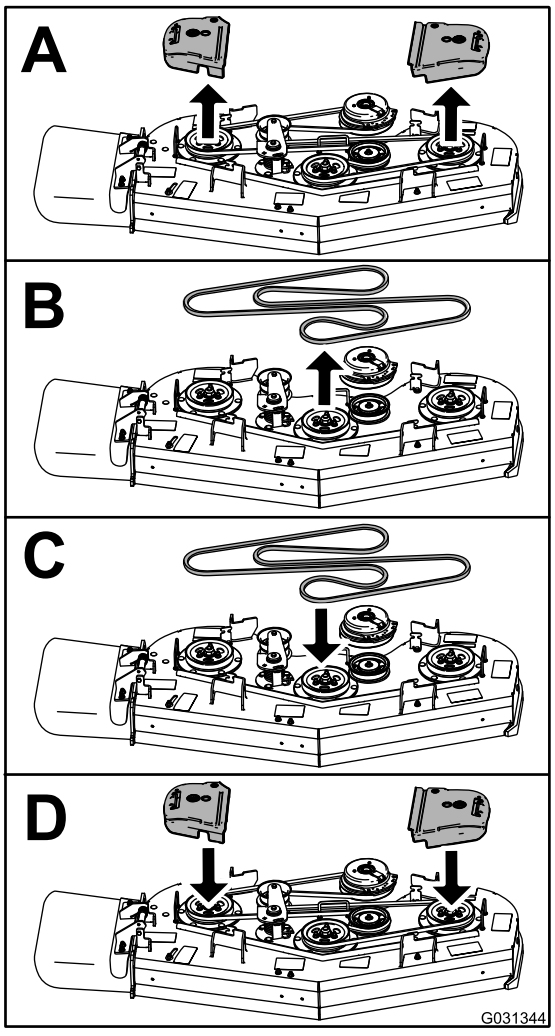

Figure 64

Replacing the Transmission Belt

Service Interval: Every 1,000 hours—Replace the transmission belt.

1. Remove the fuel tank; refer to Removing the Fuel Tank (page 38).
2. Remove the hydraulic-reservoir cap.
3. Locate the drain plugs in the bottom of the transmission and place a drain pan under the plug (Figure 65).

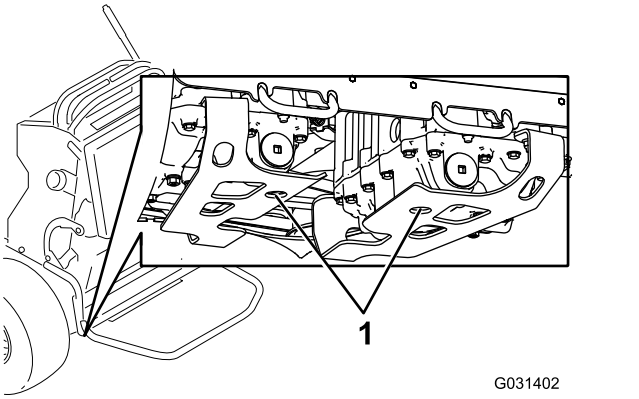

Figure 65

1. Drain plug

4. Allow the hydraulic fluid to drain from the machine.
5. Remove the lower hydraulic hose (Figure 66).

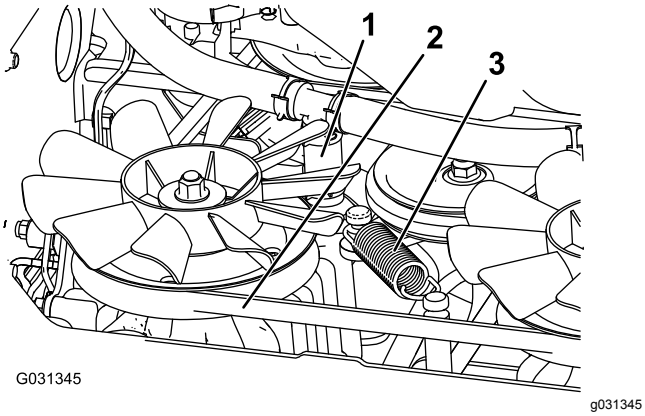

Figure 66

1. Lower hydraulic hose
2. Transmission belt
3. Tension spring

6. Remove the tension spring (Figure 66).

⚠ CAUTION

The spring is under tension when installed and can cause personal injury.

Wear safety glasses and be careful when removing the spring.

7. Remove the deck belt from the clutch and clutch stop (Figure 66).
8. Install the new belt.
9. Install the tension spring and lower hydraulic hose.
10. Install the drain plugs and torque to 22 to 27 N·m (16 to 20 ft-lb).
11. Add hydraulic fluid to the fill level.
12. Install the hydraulic-reservoir cap.
13. Run the machine for 10 minutes and verify that the hydraulic fluid is at the correct level.

Adjusting the Motion-Control Levers

If the motion-control levers do not align horizontally, adjust the right side motion-control lever.

1. Disengage the PTO, move the motion-control levers to the neutral position, and set the parking brake.
2. Shut off the engine, remove the key, and wait for all moving parts to stop before leaving the operating position.
3. Push the motion-control levers down out of the NEUTRAL-LOCK position (Figure 67).
4. Check if the right motion-control lever aligns horizontally with the left motion-control lever (Figure 67).

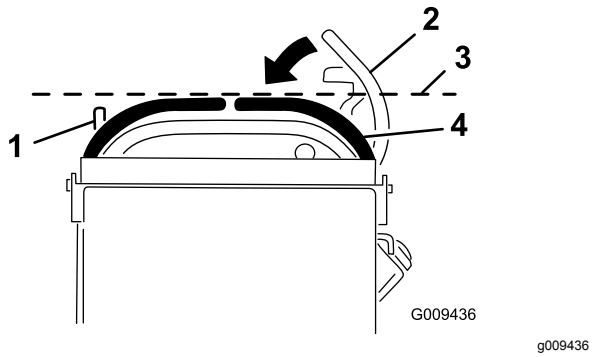

Figure 67

1. Left motion-control lever
2. Right motion-control lever in the Neutral-lock position
3. Check the horizontal alignment here
4. Right motion-control lever

5. To adjust the motion-control levers horizontally, you must adjust the cam.
6. Release the cushion from the rear of the machine.
7. Loosen the nut holding the cam (Figure 68).

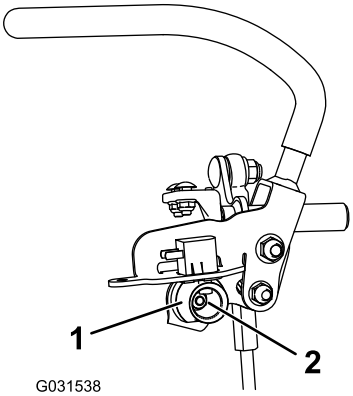

Figure 68

1. Cam
2. Nut

8. Adjust the cam until it aligns with the left motion-control lever and tighten the nut for the cam.

   Note: Moving the cam clockwise (in the vertical position) lowers the handle; moving the cam counterclockwise (in the vertical position) raises the handle.

   Important: **Ensure that the flat portion of the cam does not go above a vertical position (right or left); otherwise you may damage the switch.**

9. Repeat steps 3 through 8 for the left motion-control lever.

Hydraulic System Maintenance

Hydraulic System Specifications

Hydraulic Fluid Type: Toro® HYPR-OIL™ 500 hydraulic fluid

Hydraulic System Fluid Capacity: 4.7 L (159 fl oz)

Important: **Use the fluid specified. Other fluids could damage the system.**

Checking the Hydraulic Fluid

Service Interval: After the first 8 hours

Every 500 hours

Note: Check the hydraulic fluid level when the fluid is cold.

1. Position the machine on a level surface.
2. Disengage the power takeoff (PTO) and shut off the engine.
3. Wait for all moving parts to stop and set the parking brake before leaving the operating position.
4. Clean the area around the cap and the filler neck of the hydraulic tank (Figure 69).

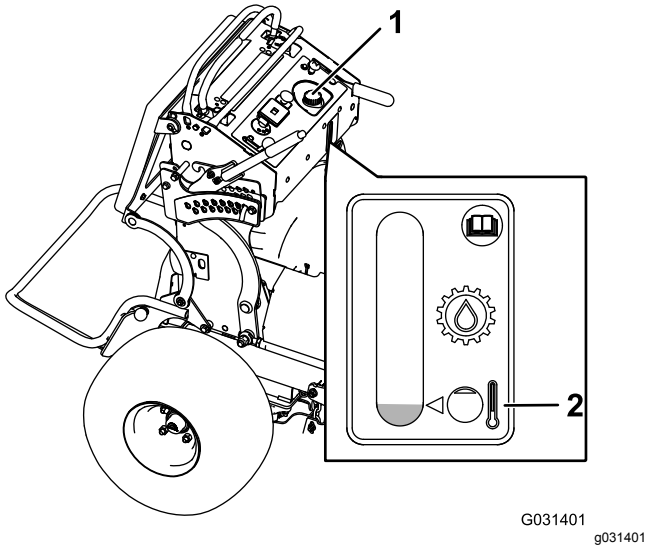

Figure 69

1. Hydraulic-tank cap
2. Fill level

5. Remove the cap from the filler neck (Figure 69).

   Note: Look inside to check the fluid level in the reservoir.

6. Add fluid to the reservoir until it reaches the fill level.
7. Install the cap on the filler neck.

⚠ WARNING

Hydraulic fluid escaping under pressure can penetrate skin and cause injury.

- **If hydraulic fluid is injected into the skin, it must be surgically removed within a few hours by a doctor familiar with this type of injury. Gangrene may result if this is not done.**
- **Keep your body and hands away from pinhole leaks or nozzles that eject high-pressure hydraulic fluid.**
- **Use cardboard or paper to find hydraulic leaks.**
- **Safely relieve all pressure in the hydraulic system before performing any work on the hydraulic system.**
- **Make sure that all hydraulic-fluid hoses are in good condition, and all that the hydraulic connections and fittings are tight before applying pressure to the hydraulic system.**

Replacing the Hydraulic Fluid and Filters

Service Interval: After the first 50 hours

Every 500 hours/Yearly (whichever comes first)—Change the hydraulic filters and hydraulic fluid.

Change the hydraulic fluid more frequently in severe conditions or in a hot operating climate. Contact your Authorized Service Dealer for a hydraulic kit to replace the hydraulic filters.

⚠ WARNING

Hot hydraulic fluid can cause severe burns.

Allow the hydraulic fluid to cool before performing any maintenance on the hydraulic system.

1. Park the machine on a level surface, disengage the PTO, and engage the parking brake.
2. Shut off the engine, remove the key, and wait for all moving parts to stop before leaving the operating position.
3. Remove the fuel tank; refer to Removing the Fuel Tank (page 38).
4. Remove the hydraulic-reservoir cap.
5. Locate the drain plug in the bottom of each transmission and place a drain pan under the plugs (Figure 70).

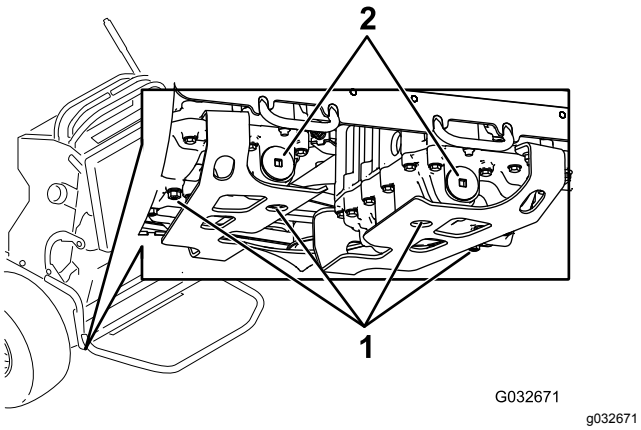

Figure 70

1. Drain plug
2. Hydraulic filter

6. Remove the drain plugs.
7. Allow the hydraulic fluid to fully drain from the machine.
8. Remove the hydraulic filter cap and filter from each transmission.
9. Install new hydraulic filters with the spring side facing out and install the filter caps.
10. Install the drain plugs and torque to 22 to 27 N·m (16 to 20 ft-lb).
11. Loosen the vent plug in each transmission so that it is loose and wobbles (Figure 71).

    Note: This allows air to escape the hydraulic system as you add hydraulic fluid.

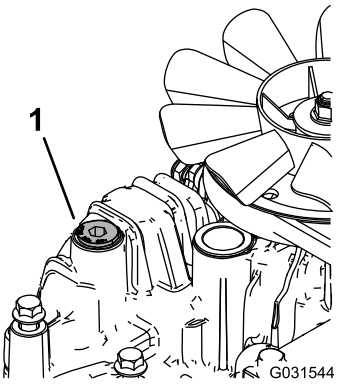

Figure 71

Left transmission shown

1. Vent plug

12. Slowly add fluid to the hydraulic tank until it starts to come out 1 of the vent plugs.

    Important: **Use the fluid specified in Hydraulic System Specifications (page 49) or equivalent. Other fluids could cause system damage.**

    Important: **Monitor the level of fluid in the hydraulic tank so that you do not overfill it.**

13. Tighten the vent plugs.
14. Install the hydraulic-tank cap.
15. Install the fuel tank.
16. Start the engine and let it run for about 2 minutes to purge air from the system.
17. Shut off the engine and check for leaks.

    Note: If 1 or both wheels do not drive, refer to Bleeding the Hydraulic System (page 51).

Bleeding the Hydraulic System

The traction system is self-bleeding, however, it may be necessary to bleed the system if fluid is changed or after work is performed on the system.

1. Disengage the PTO and set the parking brake.
2. Shut off the engine and wait for all moving parts to stop before leaving the operating position.
3. Raise the rear of the machine onto jack stands high enough to raise the drive wheels off the ground.
4. Start the engine and move the throttle control to the idle position.

   Note: If the drive wheel does not rotate, it is possible to assist the purging of the system by carefully rotating the tire in the forward direction.
5. Check the hydraulic fluid level as it drops, and add fluid as required to maintain the proper level.
6. Repeat this procedure for the opposite wheel.

Mower Deck Maintenance

Servicing the Cutting Blades

To ensure a superior quality of cut, keep the blades sharp. For convenient sharpening and replacement, you may want to keep extra blades on hand.

⚠ WARNING

A worn or damaged blade can break, and a piece of the blade could be thrown at you or bystanders, resulting in serious personal injury or death.

- **Inspect the blades periodically for wear or damage.**
- **Replace a worn or damaged blade.**

Before Inspecting or Servicing the Blades

Park the machine on a level surface, disengage the blades and set the parking brake. Turn the ignition key to OFF. Remove the key, and disconnect the spark plug wires from the spark plugs.

Inspecting the Blades

Service Interval: Before each use or daily

1. Inspect the cutting edges (Figure 72).
2. If the edges are not sharp or have nicks, remove and sharpen the blade; refer to Sharpening the Blades (page 52).
3. Inspect the blades, especially in the curved area.
4. If you notice any cracks, wear, or a slot forming in this area, immediately install a new blade (Figure 72).

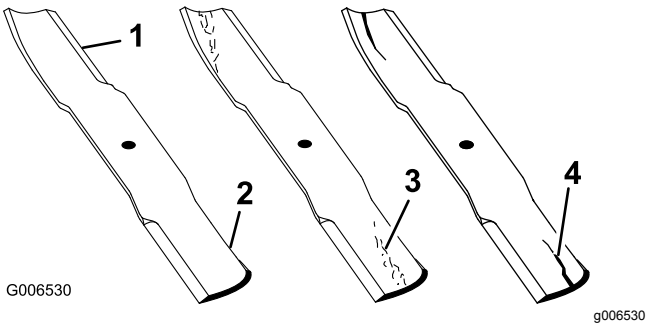

Figure 72

1. Cutting edge
2. Curved area
3. Wear/slot forming
4. Crack

Checking for Bent Blades

1. Disengage the PTO, move the motion-control levers to the NEUTRAL-LOCK position, and set the parking brake.
2. Shut off the engine, remove the key, and wait for all moving parts to stop before leaving the operating position.
3. Rotate the blades until the ends face forward and backward.
4. Measure from a level surface to the cutting edge, position **A**, of the blades (Figure 73).

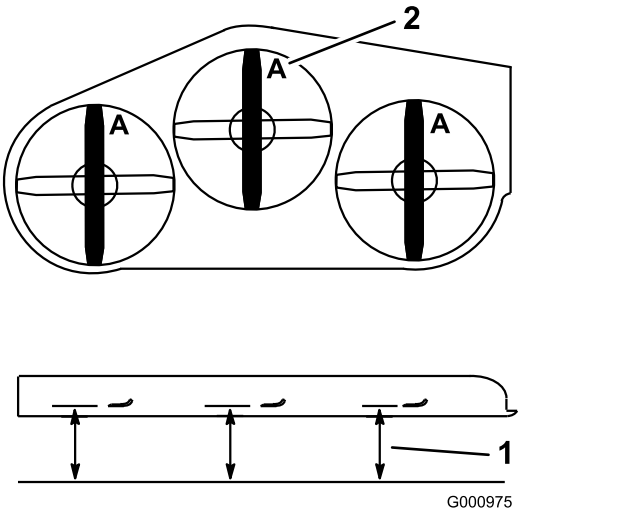

Figure 73

1. Measure here from blade to hard surface
2. Position A

5. Rotate the opposite ends of the blades forward.
6. Measure from a level surface to the cutting edge of the blades at the same position as in step 4 above.

   Note: The difference between the dimensions obtained in steps 4 and 5 must not exceed 3 mm (1/8 inch).

   Note: If this dimension exceeds 3 mm (1/8 inch), replace the blade.

⚠ WARNING

A blade that is bent or damaged could break apart and could critically injure you or bystanders.

- **Always replace a bent or damaged blade with a new blade.**
- **Do not file or create sharp notches in the edges or surfaces of the blade.**

Removing the Blades

Replace the blades if they hit a solid object, if a blade is out of balance, or if a blade is bent. To ensure optimum performance and continued safety conformance of the machine, use genuine Toro replacement blades. Replacement blades made by other manufacturers may result in nonconformance with safety standards.

1. Hold the blade end using a rag or a thickly padded glove.
2. Remove the blade bolt, the curved washer, and the blade from the spindle shaft (Figure 74).

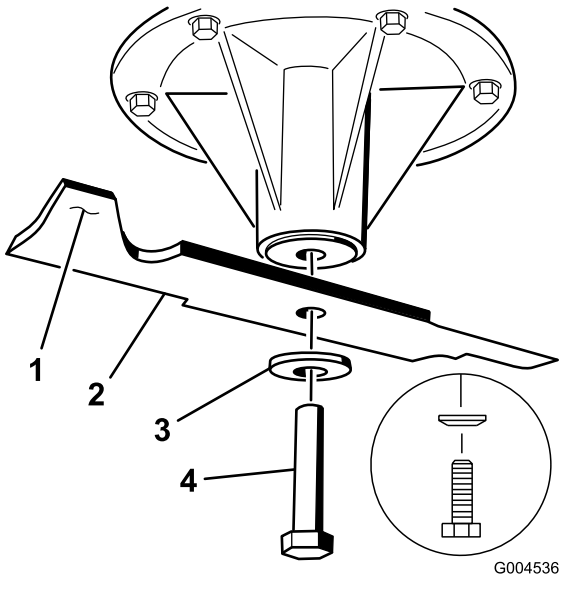

Figure 74

1. Sail area of the blade
2. Blade
3. Curved washer
4. Blade bolt

Sharpening the Blades

1. Use a file to sharpen the cutting edge at both ends of the blade (Figure 75).

   Note: Maintain the original angle.

   Note: The blade retains balance if the same amount of material is removed from both cutting edges.

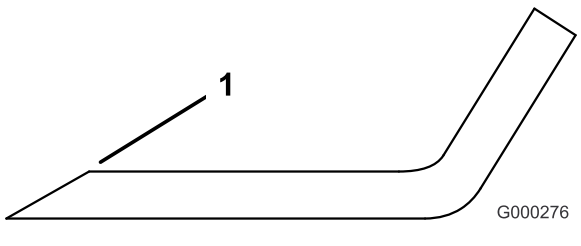

Figure 75

1. Sharpen at the original angle

2. Check the balance of the blade by putting it on a blade balancer (Figure 76).

   Note: If the blade stays in a horizontal position, the blade is balanced.

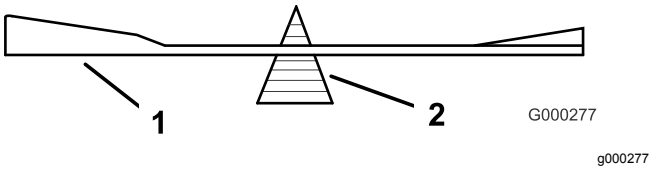

Figure 76

1. Blade
2. Balancer

3. If the blade is not balanced, file some metal off the end of the sail area only (Figure 74).
4. Repeat this procedure until the blade is balanced.

Installing the Blades

1. Install the blade onto the spindle shaft (Figure 77).

   Important: **The curved part of the blade must be pointing upward toward the inside of the mower to ensure proper cutting.**

2. Install the spring disk and blade bolt (Figure 77).

   Note: The spring-disk cone must be installed toward the bolt head (Figure 77).

3. Torque the blade bolt to 115 to 150 N·m (85 to 110 ft-lb).

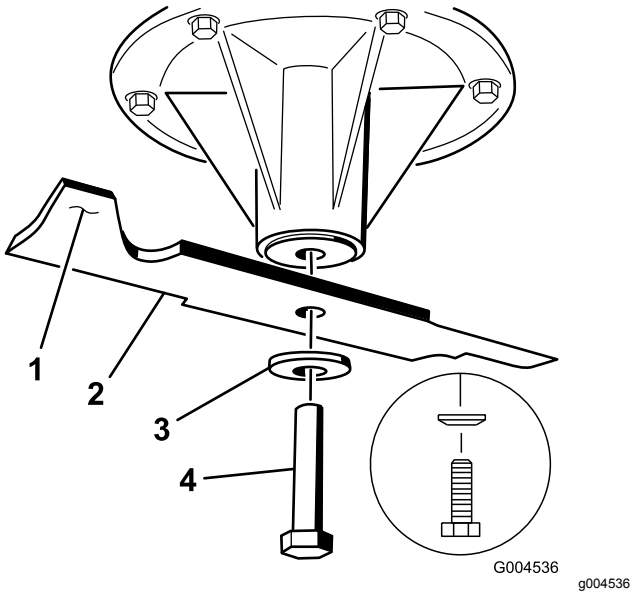

Figure 77

1. Sail area of the blade
2. Blade
3. Spring disk
4. Blade bolt

Leveling the Mower Deck

Preparing the Machine

Ensure that the mower deck is level any time you install the mower deck or when you see an uneven cut on your lawn.

Level the mower deck side to side before adjusting the front-to-rear slope.

1. Park the machine on a level surface, disengage the PTO, and engage the parking brake.
2. Shut off the engine, remove the key, and disconnect the spark-plug wires from the spark plugs.
3. Check the tire pressure of both drive tires; refer to Checking the Tire Pressure (page 42).
4. Check the mower deck for bent blades; remove and replace any bent blades; refer to Servicing the Cutting Blades (page 51).
5. Lower the mower deck to the 76 mm (3 inch) height-of-cut position.

Checking the Mower Deck Side-to-Side Height

1. Adjust the rear-tire pressure.
2. Ensure that the blades are not bent; refer to Checking for Bent Blades (page 52).
3. Position the blades side to side.
4. Measure at the **B** and **C** locations from a level surface to the cutting edge of blade tips (Figure 78).

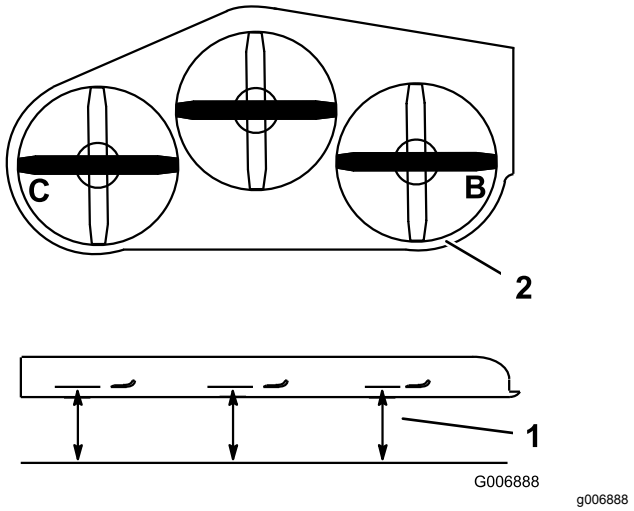

Figure 78

1. Measure from a level surface
2. Measure the blade at points **B** and **C**

5. The difference between measurements **B** and **C** should be no more than 6 mm (1/4 inch).

Note: If it is not correct, refer to Leveling the Mower Deck from Side to Side (page 54).

Leveling the Mower Deck from Side to Side

1. Loosen the side nut and jam nut in the yokes you want to adjust (Figure 79).

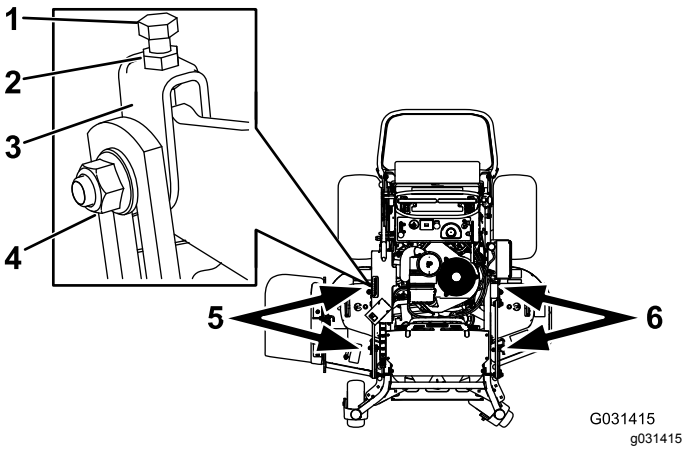

Figure 79

1. Top bolt
2. Jam nut
3. Yoke
4. Side nut
5. Adjust these yokes to adjust the right side of the mower deck.
6. Adjust these yokes to adjust the left side of the mower deck.

2. Rotate the top bolt of the yokes to adjust the height of the mower deck (Figure 79).

   Note: Rotate the bolts clockwise to raise the deck; rotate the bolt counterclockwise to lower it.

3. Tighten the jam nuts and side bolts.
4. Check the side-to-side height; refer to Checking the Mower Deck Side-to-Side Height (page 53).

Checking the Mower Deck Front-to-Rear Pitch

1. Adjust the tire pressure in the rear tires to the correct specifications.
2. Position 1 blade front-to-rear. Measure at **A** and **B** locations from a level surface to the cutting edge of the blade tips (Figure 80).

   Note: The mower blade should be 6 mm (1/4 inch) lower in front at **A** than in the rear at **B**.

3. Rotate the blades and repeat for other blades.

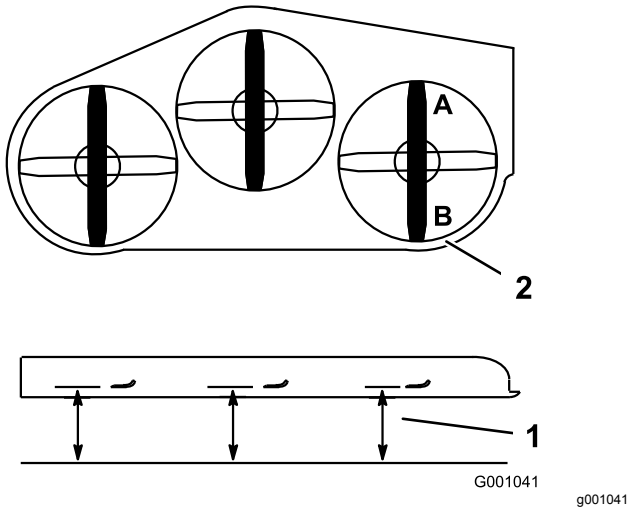

Figure 80

1. Measure the blade at points **A** and **B**
2. Measure from a level surface

4. If the front-to-rear pitch is not correct, refer to Leveling the Mower Deck from Front to Rear (page 54).

Leveling the Mower Deck from Front to Rear

1. Loosen the jam nut and side bolt in the yokes that you want to adjust (Figure 81).

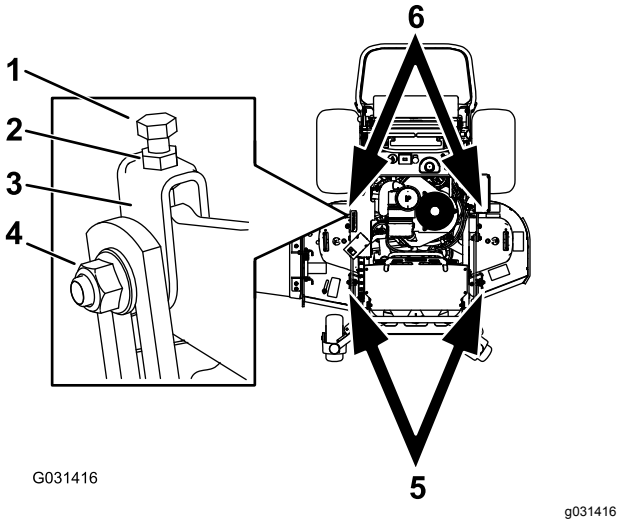

Figure 81

1. Top bolt
2. Jam nut
3. Yoke
4. Side nut
5. Adjust these yokes to adjust the front side of the mower deck.
6. Adjust these yokes to adjust the rear side of the mower deck.

2. Rotate the top bolt of the yokes to adjust the height of the mower deck (Figure 81).

Note: Rotate the bolt clockwise to raise the deck; rotate the bolt counterclockwise to lower it.

3. Tighten the jam nuts and side bolts.
4. Check the front-to-rear pitch; refer to Checking the Mower Deck Front-to-Rear Pitch (page 54).

Matching the Height-of-Cut

1. Check the rear tire pressure.
2. Set the height-of-cut to the 7.6 cm (3 inches) position; refer to Adjusting the Height-of-Cut (page 26).
3. With the machine on level surface, position 1 blade front-to-rear.
4. Measure at **A**, and from a level surface to the cutting edge of the blade tips (Figure 82).

   Note: The measurement should be 7.6 cm (3 inches).

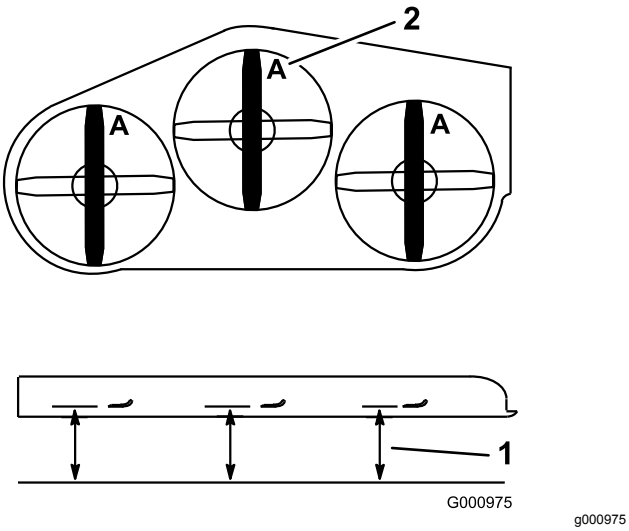

g000975

Figure 82

1. Measure from a level surface
2. Measure the blade at point **A**

5. If the measurement is not correct, locate the front 2 yokes on the machine (Figure 81).
6. Loosen the side bolt and jam nut of the yokes.
7. Adjust the top bolt of the yokes until the blade tips match 7.6 cm (3 inches).
8. Tighten the jam nuts and side bolts.

Adjusting the Deck-Lift Spring

Note: Adjusting the deck-lift spring alters how much the deck floats and how much effort it takes to lift the deck when using the height-of-cut handle.

1. Raise the deck-lift lever and lock it into the TRANSPORT position.
2. Check the length between the spring nut and the rear side of the welded mount bracket (Figure 83).
3. Ensure that the length is between 47 to 50 mm (1.8 to 2 inches) (Figure 83).
4. If needed, adjust the distance by adjusting the bolt on the front of the mount bracket (Figure 83).

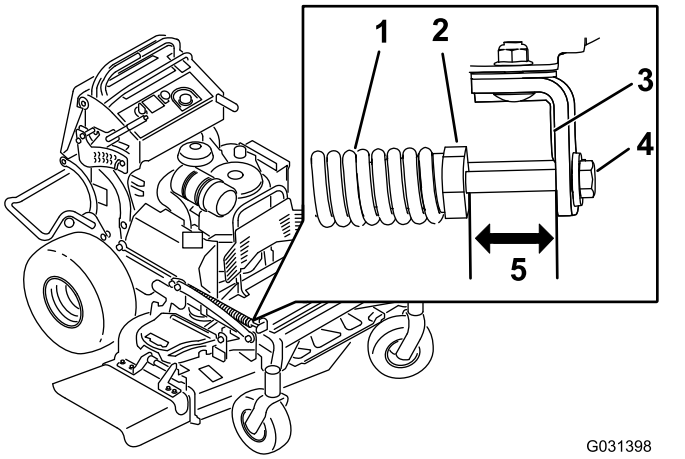

g031398

Figure 83

1. Deck-lift spring
2. Spring nut
3. Rear side of the mount bracket
4. Adjustment bolt
5. Length is between 47 to 50 mm (1.8 to 2 inches).

5. Repeat this procedure for the opposite deck-lift spring.

Replacing the Grass Deflector

⚠ WARNING

An uncovered discharge opening could allow the machine to throw objects toward you or bystanders, resulting in serious injury. Also, contact with the blade could occur.

Do not operate the machine unless you install a cover plate, a mulch plate, grass deflector, or bagger.

1. Remove the locknut, bolt, spring, and spacer holding the deflector to the pivot brackets (Figure 84).

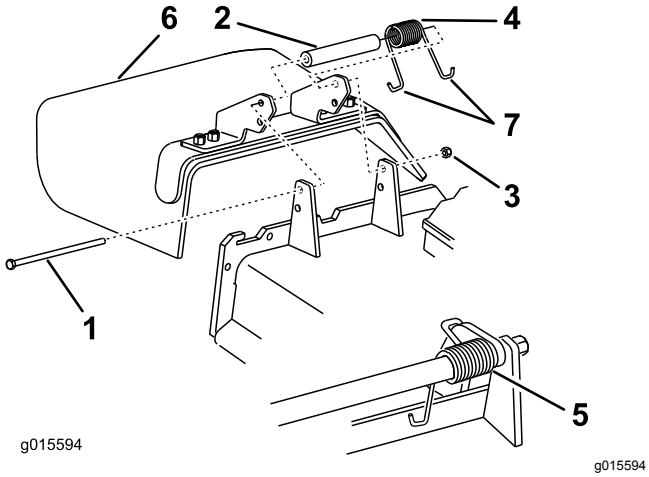

Figure 84

1. Bolt
2. Spacer
3. Locknut
4. Spring
5. Spring (installed)
6. Grass deflector
7. **J**-hook end of the spring

2. Remove the damaged or worn grass deflector.
3. Place the spacer and the spring onto the grass deflector.
4. Place 1 **J**-hook end of the spring behind the deck edge.

   Note: Make sure that 1 **J**-hook end of spring is installed behind deck edge before installing the bolt as shown in Figure 84.
5. Install the bolt and the nut.
6. Place 1 **J**-hook end of the spring around the grass deflector (Figure 84).

   Important: **The grass deflector must be able to rotate. Lift the deflector up to the full open position, and ensure that it rotates into the full-down position.**

Cleaning

Cleaning under the Mower

Service Interval: Before each use or daily

Remove the grass buildup under the mower daily.

1. Disengage the PTO, move the motion-control levers to the NEUTRAL-LOCK position and set the parking brake.
2. Shut off the engine, remove the key, and wait for all moving parts to stop before leaving the operating position.
3. Raise the front of the machine and use jack stands to support the mower.

Disposing of the Waste

Engine oil, batteries, hydraulic fluid, and engine coolant are pollutants to the environment. Dispose of these according to your state and local regulations.

Storage

Cleaning and Storage

1. Disengage the power takeoff (PTO), set the parking brake, turn the ignition key to off, and remove the key.
2. Remove grass clippings, dirt, and grime from the external parts of the entire machine, especially the engine.

   Important: **You can wash the machine with a mild detergent and water. Do not pressure wash the machine. Avoid excessive use of water, especially near the drive system and engine. Pressure washing can force dirt and water into critical parts, such as spindle bearings and electrical switches.**
3. Clean dirt and chaff from the outside of the engine cylinder head fins and blower housing.
4. Check the brake; refer to Checking the Parking Brake (page 46).
5. Service the air cleaner; refer to Servicing the Air Cleaner (page 32).
6. Grease the machine; refer to Lubrication (page 30).
7. Change the engine oil; refer to Changing the Engine Oil (page 34).
8. Check the tire pressure; refer to Checking the Tire Pressure (page 42).
9. For long-term storage:
   A. Add stabilizer/conditioner additive to fuel in the tank.
   B. Run engine to distribute conditioned fuel through the fuel system (5 minutes).
   C. Shut off the engine, allow to cool and drain the fuel tank; refer to Draining the Fuel Tank (page 37), or operate engine until it stops.
   D. Start engine and run until it stops. Repeat, on Choke until engine does not restart.
   E. Dispose of fuel properly. Recycle as per local codes.

      Note: Do not store stabilizer/conditioned gasoline over 90 days.
10. Remove the spark plug(s) and check its condition; refer to Servicing the Spark Plug (page 36). With the spark plug(s) removed from the engine, pour two tablespoons of engine oil into the spark plug hole. Now use the starter to crank the engine and distribute the oil inside the cylinder. Install the spark plug(s). Do not install the wire on the spark plug(s).
11. Check and tighten all bolts, nuts, and screws. Repair or replace any part that is damaged or defective.
12. Paint all scratched or bare metal surfaces. Paint is available from your Authorized Service Dealer.
13. Store the machine in a clean, dry garage or storage area. Remove the key from the ignition switch and keep it in a memorable place. Cover the machine to protect it and keep it clean.

Troubleshooting

Problem	Possible Cause	Corrective Action
The engine does not start, starts hard, or fails to keep running.	1. The fuel tank is empty or the shutoff valve is closed. 2. The choke control is not engaged. 3. A spark-plug wire is loose or disconnected. 4. A spark plug is pitted, fouled, or the gap is incorrect. 5. The air cleaner is dirty. 6. Dirt is in the fuel filter. 7. Dirt, water, or stale fuel is in the fuel system. 8. The gap between the safety-interlock switches is not correct.	1. Fill the fuel tank with fuel and open the valve 2. Engage the choke control. 3. Install the wire on spark plug. 4. Install a new, correctly gapped spark plug. 5. Service the air-cleaner element. 6. Replace the fuel filter. 7. Contact an Authorized Service Dealer. 8. Contact an Authorized Service Dealer.
The engine loses power.	1. The engine load is excessive. 2. The air cleaner is dirty. 3. The oil level in the crankcase is low. 4. The cooling fins and air passages under the engine blower housing are plugged. 5. A spark plug is pitted, fouled, or the gap is incorrect. 6. The vent hole in the fuel cap is plugged. 7. Dirt is in the fuel filter. 8. Dirt, water, or stale fuel is in the fuel system.	1. Reduce the ground speed. 2. Service the air cleaner element. 3. Add oil to the crankcase. 4. Remove the obstruction from the cooling fins and air passages. 5. Install a new, correctly gapped spark plug. 6. Clean or replace the fuel cap. 7. Replace the fuel filter. 8. Contact an Authorized Service Dealer.
The engine overheats.	1. Engine load is excessive. 2. Oil level in the crankcase is low. 3. Cooling fins and air passages under the engine blower housing are plugged.	1. Reduce the ground speed. 2. Add oil to the crankcase. 3. Remove the obstruction from the cooling fins and air passages.
The machine does not drive.	1. The hydraulic-oil reservoir is low. 2. Air is in the hydraulic system. 3. A pump-drive belt slips. 4. A pump-drive belt idler spring is missing. 5. Pump bypass valves are open.	1. Add hydraulic fluid to the reservoir. 2. Bleed the air out the hydraulic system. 3. Replace the pump drive belt. 4. Replace the pump drive belt idler spring. 5. Tighten the bypass valves. Torque to 12 to 15 N·m (9 to 11 ft-lb).
There is abnormal vibration.	1. Cutting blade(s) is/are bent or unbalanced. 2. A blade-mounting bolt is loose. 3. Engine mounting bolts are loose. 4. An engine pulley, idler pulley, or blade pulley is loose. 5. An engine pulley is damaged. 6. A blade spindle is bent.	1. Install new cutting blade(s). 2. Tighten the blade mounting bolt. 3. Tighten the engine mounting bolts. 4. Tighten the appropriate pulley. 5. Contact an Authorized Service Dealer. 6. Contact an Authorized Service Dealer.

Problem	Possible Cause	Corrective Action
The cutting height is uneven.	1. Blade(s) are not sharp.	1. Sharpen the blade(s).
	2. Cutting blade(s) is/are bent.	2. Install new cutting blade(s).
	3. The mower deck is not level.	3. Level the mower deck side-to-side position.
	4. The mower deck pitch is wrong.	4. Adjust the front-to-rear pitch.
	5. The underside of mower deck is dirty.	5. Clean the underside of the mower deck.
	6. The tire pressure is not correct.	6. Adjust the tire pressure.
	7. A blade spindle is bent.	7. Contact an Authorized Service Dealer.
The blades do not rotate.	1. A pump drive belt is worn, loose or broken.	1. Check the belt tension.
	2. A pump drive belt is off pulley.	2. Install drive belt and check adjusting shafts and belt guides for correct position.
	3. A mower deck belt is worn, loose or broken.	3. Install new deck belt.
	4. A mower deck belt is off pulley.	4. Install deck pulley and check the idler pulley, idler arm and spring for correct position and function.
	5. An idler spring is broken or missing.	5. Replace the spring.
	6. The electric clutch is out of adjustment.	6. Adjust the clutch air gap.
	7. The clutch connector or wire is damaged.	7. Contact an Authorized Service Dealer.
	8. The electric clutch is damaged.	8. Contact an Authorized Service Dealer.
	9. The safety-interlock system prevents blade rotation.	9. Contact an Authorized Service Dealer.
	10. The PTO switch is faulty.	10. Contact an Authorized Service Dealer.
The clutch does not engage.	1. The fuse is blown.	1. Replace the fuse. Check the coil resistance, battery charge, charging system, and wiring connections, and replace components if necessary.
	2. There is low voltage supply at the clutch.	2. Check the coil resistance, battery charge, charging system, and wiring connections and replace parts if necessary.
	3. The coil is damaged.	3. Replace the clutch.
	4. There is inadequate current supply.	4. Repair or replace the clutch lead wire or electrical system. Clean the connector contacts.
	5. The rotor/armature air gap is too large.	5. Remove the shim or replace the clutch.

Schematics

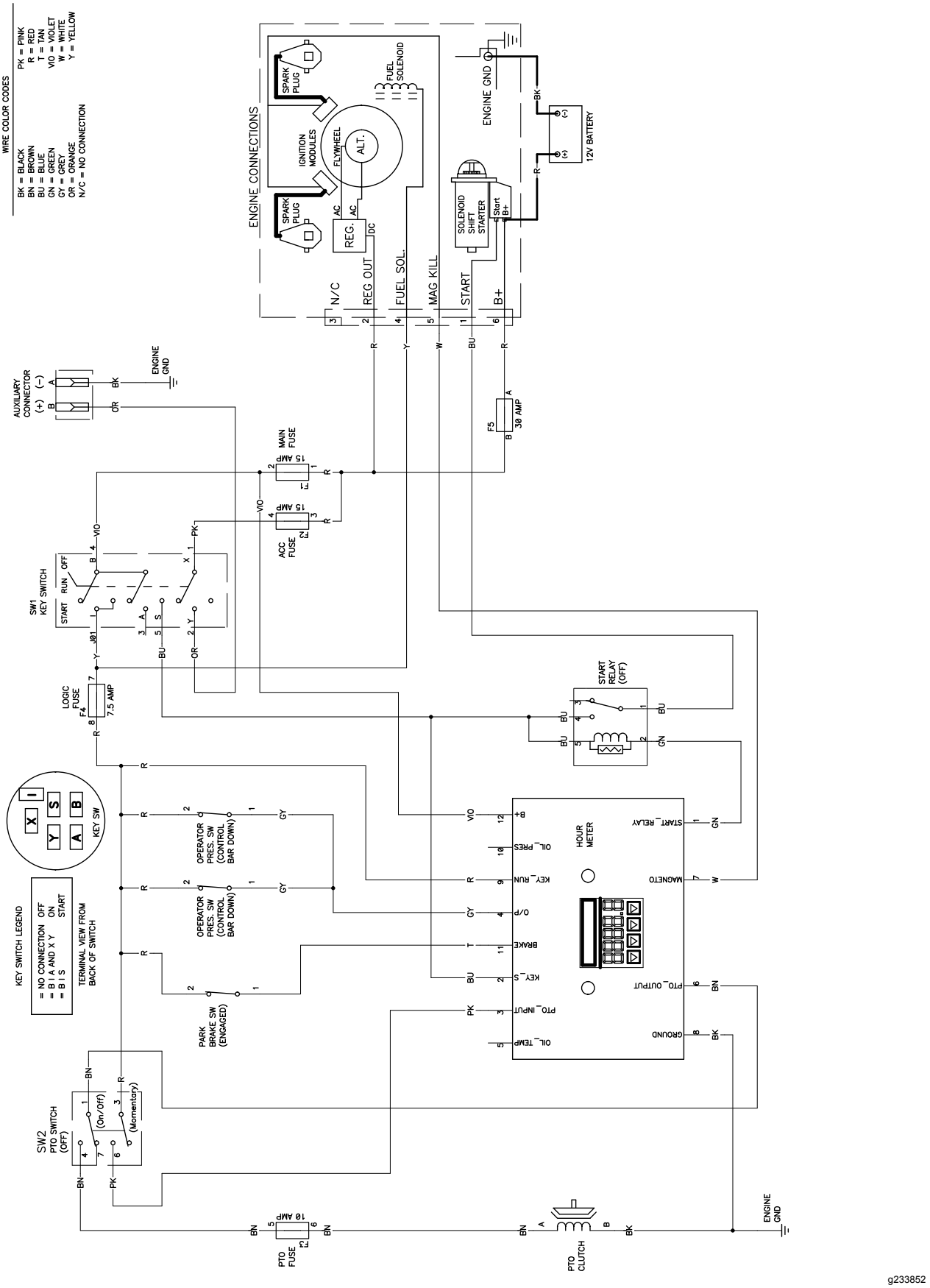

g233852

Electrical Schematic (Rev. A)

Notes:

Notes:

Notes:

The Toro Warranty

A Limited Warranty (see warranty periods below)

Landscape Contractor Equipment (LCE)

Conditions and Products Covered

The Toro Company and its affiliate, Toro Warranty Company, pursuant to an agreement between them, jointly promise to the original purchaser to repair the Toro Products listed below if defective in materials or workmanship.

The following time periods apply from the date of purchase:

Products	Warranty Period
21 in. Mowers	2 years Residential Use[1] 1 year Commercial Use
• Engines[3]	Honda – 2 years Kawasaki – 3 years
30 in. Mowers	2 years Residential Use[1] 1 year Commercial Use
• Engines[3]	Kawasaki – 3 years
Mid-Size Walk-Behind Mowers	2 years
• Engines[3]	Kawasaki – 3 years
Grand Stand® Mowers	5 years or 1,200 hours[2]
• Engines[3]	3 years
Z Master® 2000 Series Mowers	4 years or 500 hours[2]
• Engines[3]	3 years
Z Master® 3000 Series Mowers	5 years or 1,200 hours[2]
• Engines[3]	3 years
Z Master® 5000 Series Mowers	5 years or 1,200 hours[2]
• Engines[3]	Kohler Command – 2 years Kohler EFI – 3 years
Z Master® 6000 Series Mowers	5 years or 1,200 hours[2]
• Engines[3]	Kawasaki – 3 years
Z Master®7000 Series Mowers	5 years or 1,200 hours[2]
• Engines[3]	2 years
Z Master®8000 Series Mowers	2 years or 1,200 hours[2]
• Engines[3]	2 years
All Mowers	
• Battery	90 days Parts and Labor 1 year Parts only
• Belts and Tires	90 days
• Attachments	1 year

[1]Residential use means use of the product on the same lot as your home. Use at more than one location is considered commercial use and the commercial warranty would apply.

[2]Whichever occurs first.

[3]Some engines used on Toro Products are warranted by the engine manufacturer.

Instructions for Obtaining Warranty Service

If you think that your Toro Product contains a defect in materials or workmanship, follow this procedure:

1. Contact any Authorized Toro Service Dealer to arrange service at their dealership. To locate a dealer convenient to you, access our web site at www.Toro.com. You may also call the numbers listed in item #3 to use the 24-hour Toro Dealer locator system.
2. Bring the product and your proof of purchase (sales receipt) to the Service Dealer. The dealer will diagnose the problem and determine if it is covered under warranty.
3. If for any reason you are dissatisfied with the Service Dealer's analysis or with the assistance provided, contact us at:

   Toro Warranty Company
   8111 Lyndale Avenue South
   Bloomington, MN 55420-1196
   888-865-5676 (U.S. Customers)
   888-865-5691 (Canada customers)

Owner Responsibilities

You must maintain your Toro Product by following the maintenance procedures described in the *Operator's Manual*. Such routine maintenance, whether performed by a dealer or by you, is at your expense.

Items and Conditions Not Covered

There is no other express warranty except for special emission system coverage and engine warranty coverage on some products. This express warranty does not cover the following:

- Cost of regular maintenance service or parts, such as filters, fuel, lubricants, oil changes, spark plugs, air filters blade sharpening or worn blades, cable/linkage adjustments, or brake and clutch adjustments
- Components failing due to normal wear
- Any product or part which has been altered or misused or neglected or requires replacement or repair due to accidents or lack of proper maintenance
- Pickup and delivery charges
- Repairs or attempted repairs by anyone other than an Authorized Toro Service Dealer
- Repairs necessary due to failure to follow recommended fuel procedure (consult *Operator's Manual* for more details)
  - Removing contaminants from the fuel system is not covered
  - Use of old fuel (more than one month old) or fuel which contains more than 10% ethanol or more that 15% MTBE
  - Failure to drain the fuel system prior to any period of non-use over one month

General Conditions

All repairs covered by these warranties must be performed by an Authorized Toro Service Dealer using Toro approved replacement parts.

Neither The Toro Company nor Toro Warranty Company is liable for indirect, incidental or consequential damages in connection with the use of the Toro Products covered by this warranty, including any cost or expense of providing substitute equipment or service during reasonable periods of malfunction or non-use pending completion of repairs under this warranty.

All implied warranties of merchantability (that the product is fit for ordinary use) and fitness for use (that the product is fit for a particular purpose) are limited to the duration of the express warranty.

Some states do not allow exclusions of incidental or consequential damages, or limitations on how long an implied warranty lasts, so the above exclusions and limitations may not apply to you.

This warranty gives you specific legal rights, and you may also have other rights which vary from state to state.

Countries Other than the United States or Canada

Customers who have purchased Toro products outside the United States or Canada should contact their Toro Distributor (Dealer) to obtain guarantee policies for your country, province, or state. If for any reason you are dissatisfied with your Distributor's service or have difficulty obtaining guarantee information, contact the Toro importer. If all other remedies fail, you may contact us at Toro Warranty Company.

Australian Consumer Law: Australian customers will find details relating to the Australian Consumer Law either inside the box or at your local Toro Dealer.