Form No. 3420-650 Rev A

TORO®

Count on it.

Parts Catalog

TX 525

Compact Tool Carrier

Model No. 22323—Serial No. 401800000 and Up

Model No. 22323G—Serial No. 401800000 and Up

Register at www.Toro.com.
Original Instructions (EN)

CE

3420-650 A

Ordering Replacement Parts

To order replacement parts, please supply the part number, the quantity, and the description of each part desired.

Understanding Reference Numbers

Each identified part in an illustration has a reference number. The reference number for a part also appears in the parts list, along with other information about the part.

This catalog uses two special reference number formats, one to indicate parts in a service assembly and another to indicate the quantity of a given part in an illustration.

Service Assembly Reference Numbers

Parts in service assemblies have reference numbers in the form a:b. The a represents the reference number of the entire service assembly and the b represents a sequential number unique to each part within the service assembly.

For example, a wheel assembly might be identified by reference number 6, the tire by 6:1, the valve by 6:2, and the wheel by 6:3. When you order the assembly identified by reference number 6, you receive all parts identified by reference numbers 6:1,6:2, and 6:3. However, you may also order any part individually. Reference numbers of this type appear in illustration and in parts lists.

Reference Numbers Indicating Quantity

In an illustration, if a reference number indicates more than one part, the reference number has the form nX y. The n represents the quantity of the part, the X is the multiplication symbol, and the y represents the reference number.

For example, in an illustration, the reference number 2X 37 means that two of the parts identified by reference number 37 are indicated.

Contents

Main Frame and Fuel Tank Assembly . . . 6
Rear Access Cover Assembly . . . 8
Engine, Muffler and Air Cleaner Assembly . . . 10
Air Cleaner Assembly No. 93-2190 . . . 12
Fuel Tank, Fuel Pump and Filter Assembly . . . 14
Radiator and Oil Cooler Assembly . . . 16
Track and Traction Assembly . . . 18
Control Panel Assembly . . . 20
Traction Control Assembly . . . 22
Control Handle and Reference Bar Assembly . . . 24
Parking Brake Assembly . . . 26
Loader Arm Assembly . . . 28
Loader Arm Hydraulic Assembly . . . 30
Left Hand Hydraulic Lift Cylinder Assembly No. 117-1831 . . . 32
Right Hand Hydraulic Lift Cylinder Assembly No. 117-1832 . . . 33
Hydraulic Cylinder Assembly No. 117-1833 . . . 34
Grill Assembly . . . 36
Hood Assembly . . . 38
Hydraulic Pump and Filter Assembly . . . 40
Hydraulic Pump Assembly No. 106-9589 . . . 42
Traction Hydraulic Assembly . . . 44
Hydraulic Motor Assembly No. 106-7654 . . . 46
Hydraulic Pump Assembly No. 106-9590 and 106-9591 . . . 47
Principal Hydraulic Assembly . . . 48
One Spool Valve Assembly No. 104-2831 . . . 50
Two Spool Valve Assembly No. 106-9307 . . . 51
Auxiliary Hydraulic Assembly . . . 52
Drive Assembly . . . 54
Electrical Assembly . . . 56
Fuel Gauge, Hour Meter and Ignition Assembly . . . 58
Crankcase Assembly . . . 60
Oil Pan and Oil Pump Assembly . . . 61
Cylinder Head Assembly . . . 62
Gear Case and Oil Filter Cartridge Assembly . . . 63
Cylinder Head Cover Assembly . . . 64
Dipstick and Guide Assembly . . . 65
Main Bearing Case Assembly . . . 66
Camshaft and Idle Gear Shaft Assembly . . . 67
Piston and Crankshaft Assembly . . . 68
Fuel Camshaft Assembly . . . 69
Idle Apparatus and Fuel Pump Cover Assembly . . . 70
Stop Solenoid and Speed Control Plate Assembly . . . 71
Injection Pump Assembly . . . 72
Governor Assembly . . . 73
Nozzle Holder and Glow Plug Assembly . . . 74
Nozzle Holder Assembly . . . 75
Alternator, Pulley and Fan Assembly . . . 78
Alternator Components Assembly . . . 79
Starter and Flywheel Assembly . . . 80
Starter Component Assembly . . . 81
Water Flange and Thermostat Assembly . . . 82
Water Pump and Water Pipe Assembly . . . 83
Valve and Rocker Arm Assembly . . . 84
Inlet and Exhaust Manifold Assembly . . . 85

© 2018—The Toro® Company
8111 Lyndale Avenue South
Bloomington, MN 55420

Contact us at www.Toro.com.
Printed in the USA.
All Rights Reserved

Contents (continued)

Miscellaneous Engine Parts 86
Upper Engine Gasket Kit. 87
Lower Engine Gasket Kit. 88
Attachments and Accessories 89

Main Frame and Fuel Tank Assembly

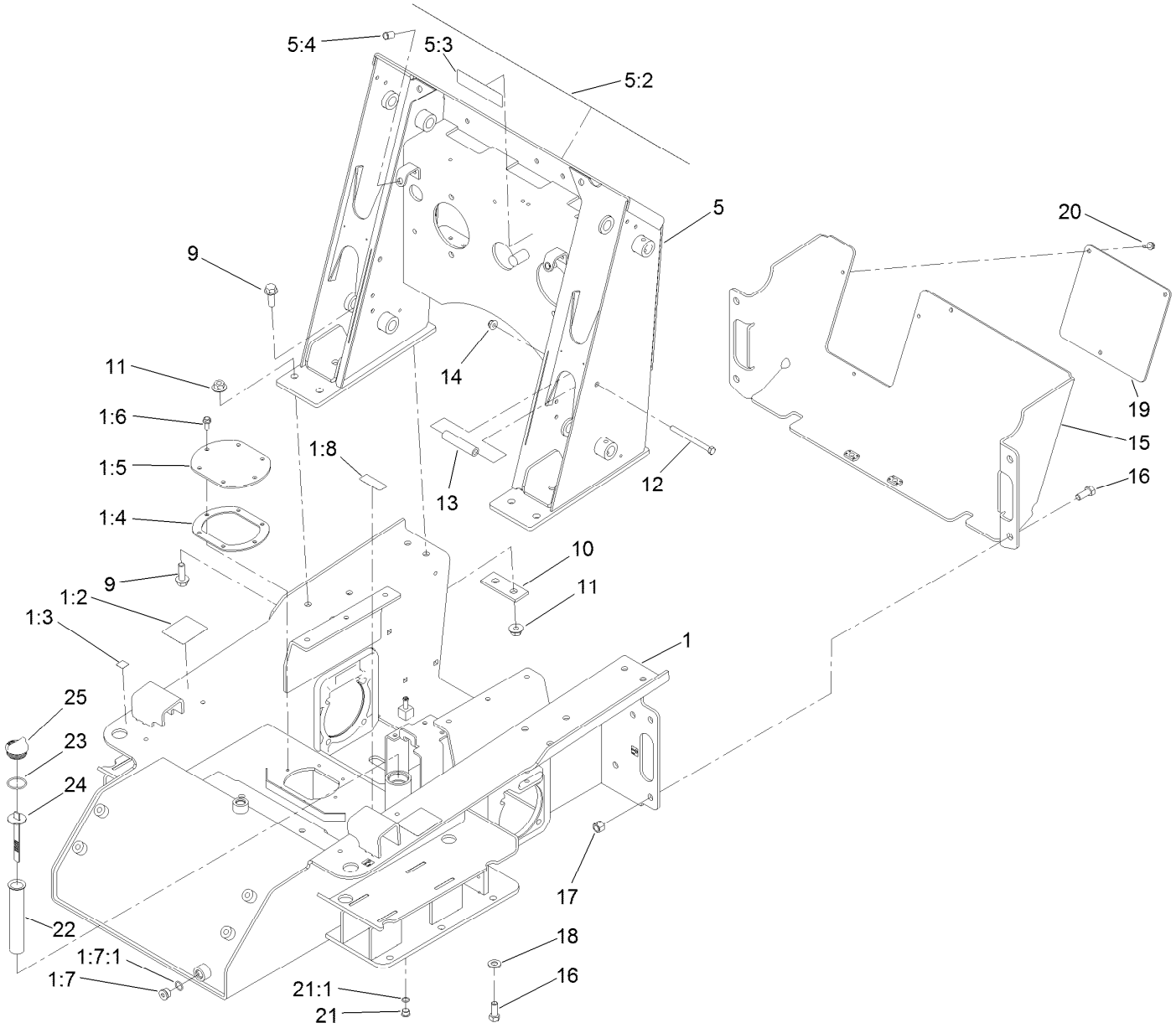

Main Frame and Fuel Tank Assembly (continued)

Ref.	Part Number	Qty.	Description
1	115-4834	1	Chassis ASM
1:2	100-4650	2	Decal-Warning
1:3	93-9084	4	Decal-Point, Lift
1:4	107-3557	1	Gasket-Cover, Access
1:5	108-6297-01	1	Cover-Tank
1:6	98-9940	6	Screw
1:7	353-988	2	Plug-Hex
1:7:1	237-79	1	O-Ring
1:8	93-6686	1	Decal-Oil, HYD
5	117-9987	1	Loader Tower ASM
5:2	117-9905	1	Decal-Panel, Control
5:3	93-7814	1	Decal-Danger
5:4	32148-8	2	Insert-Threaded
9	100-6116	10	Screw-HHF
10	100-6123-03	2	Plate-Stiffener
11	32128-52	10	Nut-Lock, Flange
12	323-23	2	Screw-HH
13	100-1271	2	Tube-Spacer
14	104-8301	2	Nut-HF, NI
15	114-8911-01	1	Cover-Rear
16	325-5	6	Screw-HH
17	3296-23	4	Nut-Lock, NI
18	3256-26	2	Washer-Flat
19	108-6267-01	1	Panel-Rear
20	32144-11	3	Screw-HWHTF
21	353-989	1	Plug-Hex, Hollow
21:1	237-42	1	O-Ring
22	61-2790	1	Filter-Screen
23	237-123	1	O-Ring
24	100-2097	1	Dipstick-Oil
25	93-7498	1	Plug-Plastic

Rear Access Cover Assembly

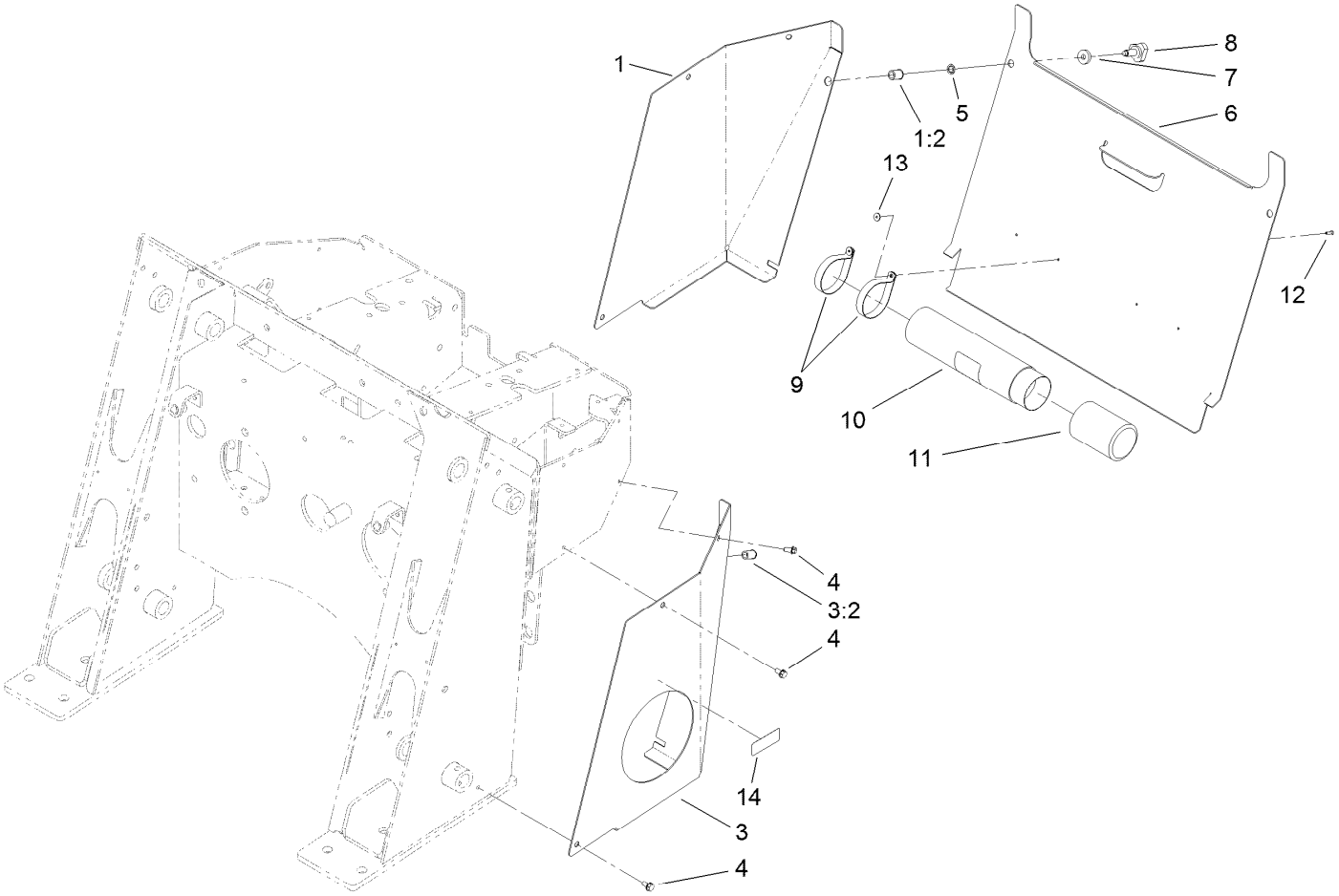

Rear Access Cover Assembly (continued)

Ref.	Part Number	Qty.	Description
1	106-9342	1	RH Rear Cover Support ASM
1:2	32148-9	1	Insert-Nut
3	106-9343	1	LH Rear Cover Support ASM
3:2	32148-9	1	Insert-Nut
4	9266714	6	Screw-HWH
5	32151-72	2	Ring-Retaining
6	106-9339-01	1	Cover-Access, Rear
7	106-0565	2	Washer-Rubber
8	95-9648	2	Knob
9	2412-120	2	Clamp-R
10	104-7050	1	Tube-Manual
11	104-7048	1	Cap-Housing
12	3269-17	2	Rivet-Pop
13	3269-10	2	Washer-Back
14	93-6680	1	Decal-Diesel

Engine, Muffler and Air Cleaner Assembly

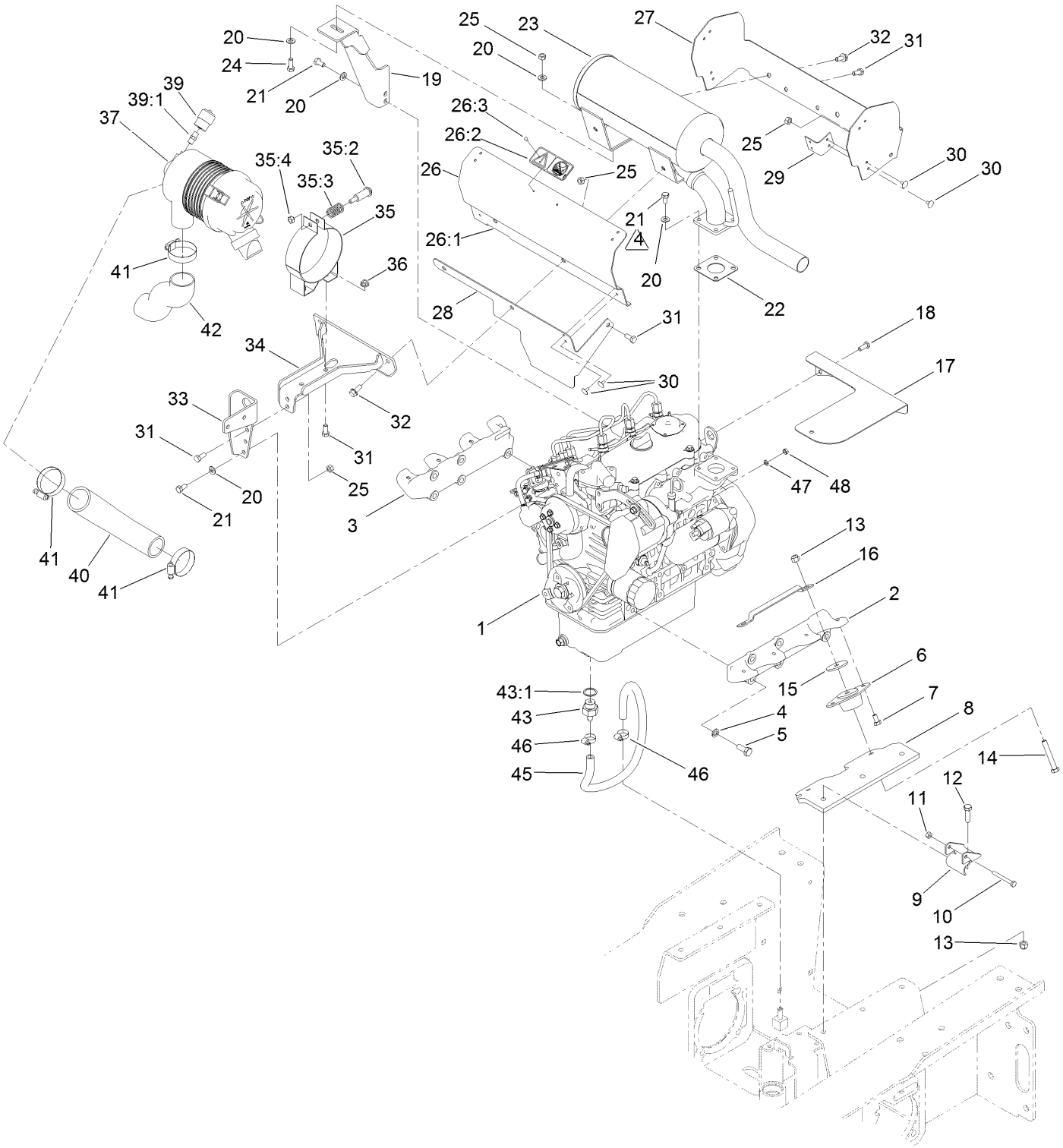

Engine, Muffler and Air Cleaner Assembly (continued)

Ref.	Part Number	Qty.	Description
1	127-9653	1	Engine-Kubota, D902
2	108-6269-03	1	Mount-Engine, LH
3	108-6271-03	1	Mount-Engine, RH
4	42-9600	10	Washer-Lock
5	43-0090	10	Screw-HH
6	120-6274	4	Mount-Engine
7	322-2	8	Screw-HH
8	107-3617-03	2	Plate-Mount, Engine
9	112-2533-03	2	Guide-Cable
10	321-18	2	Screw-HH
11	32152-4	2	Nut-Lock, Cone
12	323-7	6	Screw-HH
13	3296-39	10	Nut-Lock, NI
14	323-12	4	Screw-HH
15	63-7400	4	Washer-Rebound
16	108-6340	2	Strap-Rebound
17	108-6362	1	Plate-Baffle, Starter
18	33114-020	2	Screw-HH
19	112-2403-03	1	Support-Muffler
20	3256-23	10	Washer-Plain
21	99-5132	8	Bolt
22	99-8343	1	Gasket-Muffler
23	106-9584	1	Muffler ASM
24	322-4	1	Screw-HH
25	32152-1	6	Nut-Lock, Cone
26	112-2564	1	Heat Shield Baffle ASM
26:1	108-6355	1	Plate-Baffle, Muffler
26:2	115-4882	1	Plate-Hot Surface
26:3	3269-31	2	Rivet-Pop
27	108-6354	1	Plate-Baffle
28	108-6356	1	Plate-Baffle, Lower
29	112-2449	4	Bracket-Shield
30	146489	16	Rivet
31	322-3	7	Screw-HH
32	3234-5	4	Screw-HHF
33	107-3645-03	1	Mount-Filter, Air
34	108-6390-03	1	Bracket ASM
35	93-2191	1	Air Cleaner Mounting Band ASM
35:2	94-3653	1	Bolt
35:3	94-3654	1	Spring
35:4	48-9510	1	Nut
36	32128-20	2	Nut-HF
37	93-2190	1	Air Cleaner ASM
39	104-3563	1	Indicator
39:1	94-1416	1	Adapter-Indicator
40	108-6336	1	Hose-Air, Inlet
41	2412-92	3	Clamp-Hose
42	112-2431	1	Hose-Air
43	114-8587	1	Fitting-Hose
43:1	98-9399	1	Gasket
45	114-8599	1	Hose-Drain, Engine Oil
46	2412-36	2	Clamp-Hose
47	43-5930	1	Washer-Lock, Spring
48	43-2830	1	Nut-Hex

Air Cleaner Assembly No. 93-2190

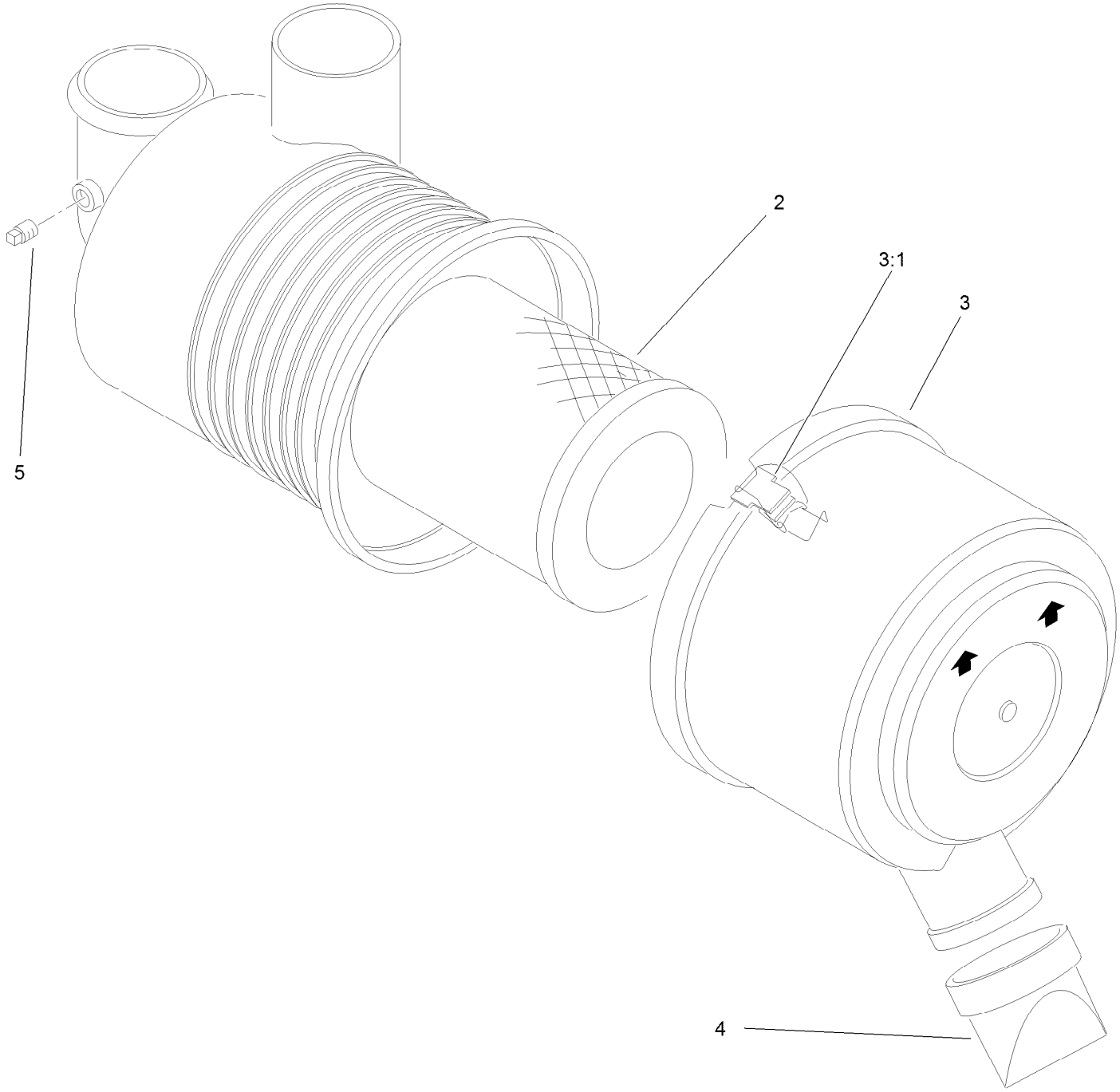

Air Cleaner Assembly No. 93-2190 (continued)

Ref.	Part Number	Qty.	Description
2	108-3811	1	Filter-Air
3	94-3652	1	Cover ASM
3:1	1-643283	2	Latch-Cleaner, Air
4	87-9400	1	Valve-Vacuator
5	285-17	1	Plug-Pipe

Fuel Tank, Fuel Pump and Filter Assembly

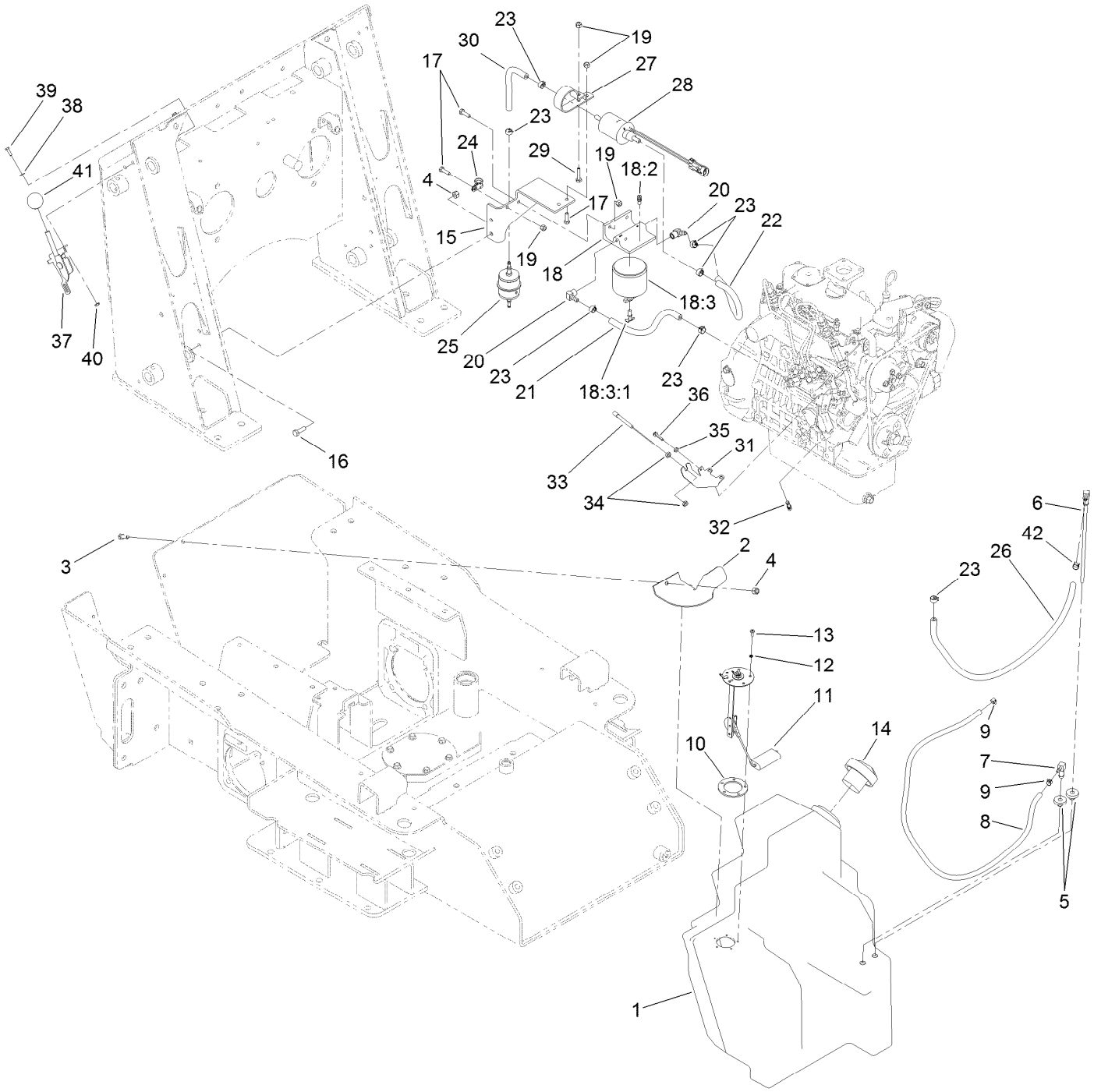

Fuel Tank, Fuel Pump and Filter Assembly (continued)

Ref.	Part Number	Qty.	Description
1	115-4800	1	Tank-Fuel
2	108-6273-03	1	Clamp-Tank, Fuel
3	322-3	1	Screw-HH
4	3296-29	3	Nut-Lock, NI
5	46-6560	2	Bushing
6	98-0185	1	Pipe-Stand
7	104-5228	1	Fitting-Elbow, 90 DEG
8	110-3958	1	Hose-Fuel
9	2412-80	2	Clamp-Hose
10	113372	1	Gasket-Sender, Fuel
11	120-5391	1	Sender-Fuel
12	3253-17	5	Washer-Lock
13	3250-31	5	Screw-PPH
14	107-2172	1	Cap-Diesel
15	117-1346-03	1	Bracket-Pump, Fuel
16	322-5	2	Screw-HH
17	321-5	4	Screw-HH
18	109-2678	1	Filter Head ASM
18:2	63-8290	1	Vent-Air
18:3	63-8300	1	Element-Spin On
18:3:1	63-8310	1	Valve-Drain
19	3296-42	5	Nut-Lock, NI
20	353-781	2	Fitting-Elb, 90

Ref.	Part Number	Qty.	Description
21	110-4124	1	Hose-Fuel
22	106-1126	1	Hose-Fuel
23	92-2379	7	Clamp-Hose
24	2412-134	1	Clamp-R
25	112-7836	1	Filter-Inline
26	109-0302	1	Hose-Fuel
27	110-8817	1	Bracket-Pump, Fuel
28	110-8806	1	Pump-Fuel
29	321-8	1	Screw-HH
30	108-3280	1	Hose-Fuel
31	108-5922	1	Bracket-Support, Throttle
32	108-5928	1	Swivel-Stop, Cable
33	108-6337	1	Cable-Throttle
34	3220-1	2	Nut-Jam
35	3217-26	1	Nut-Hex
36	117-1701	1	Screw-HWHTF
37	108-9730	1	Lever-Control
38	3256-51	2	Washer-Flat
39	3290-134	2	Screw
40	32149-7	2	Nut-Keps
41	233-42	1	Knob
42	2412-98	1	Clamp-Hose

Radiator and Oil Cooler Assembly

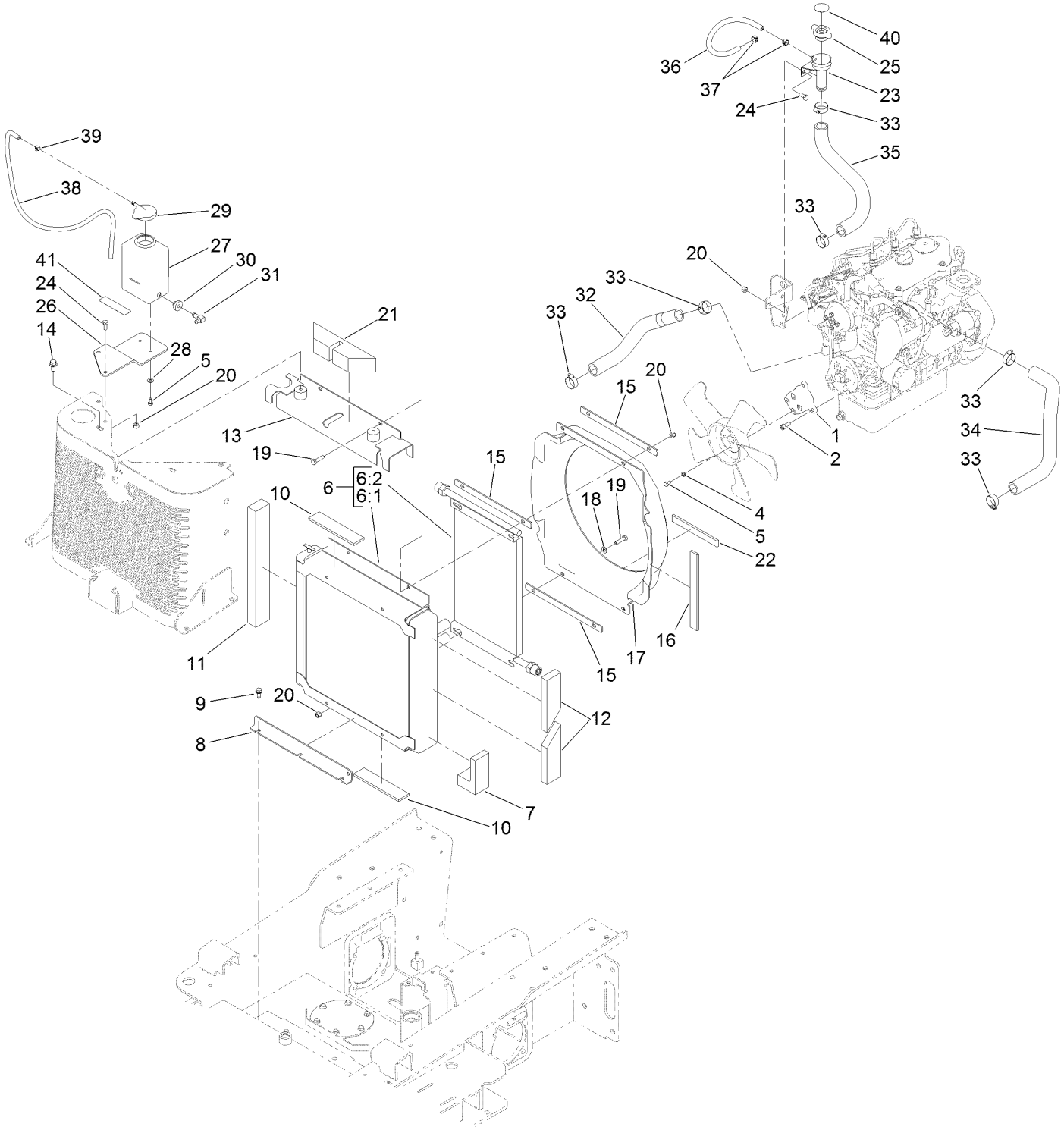

Radiator and Oil Cooler Assembly (continued)

Ref.	Part Number	Qty.	Description
1	112-2576-03	1	Spacer-Machined
2	108-6343	3	Screw-Cap, HSH
4	3253-3	4	Washer-Lock
5	321-2	6	Screw-HH
6		1	Radiator And Oil Cooler ASM ●
6:1	106-9595	1	Radiator
6:2	106-9597	1	Cooler-Oil, HYD
7	108-6375	2	Seal-Foam
8	108-6397-03	1	Mount-Radiator
9	32144-11	3	Screw-HWHTF
10	112-2401	4	Pad-Rubber
11	108-6369	1	Seal-Foam
12	108-6371	2	Seal-Foam
13	112-2440-03	1	Bracket-Radiator
14	3234-12	2	Screw-HHF
15	108-6395-03	3	Plate-Backing
16	112-2529	2	Foam-Seal
17	108-6347	1	Shroud-Fan
18	3256-23	2	Washer-Plain
19	322-6	4	Screw-HH
20	3296-29	8	Nut-Lock, NI
21	108-6372	1	Seal-Foam
22	112-2466	1	Pad-Rubber
23	108-6312	1	Tube-Filler, Radiator
24	322-3	4	Screw-HH
25	93-5957	1	Cap-Radiator
26	112-2458-03	1	Bracket-Tank, Overflow
27	1-643163	1	Tank-Overflow
28	3256-22	2	Washer-Flat
29	1-643164	1	Cap-Tank, Overflow
30	46-6560	1	Bushing
31	46-6550	1	Fitting-Elbow, 90 DEG
32	108-6309	1	Hose-Radiator
33	2412-34	6	Clamp-Hose
34	112-2459	1	Hose-Radiator
35	108-6310	1	Hose-Radiator
36	110-4110	1	Hose-LP
37	92-2379	2	Clamp-Hose
38	108-6344	1	Hose-LP
39	2412-80	1	Clamp-Hose
40	106-6755	1	Decal-Cap, Radiator
41	115-4865	1	Decal-Radiator Fill

● Not serviced separately

Track and Traction Assembly

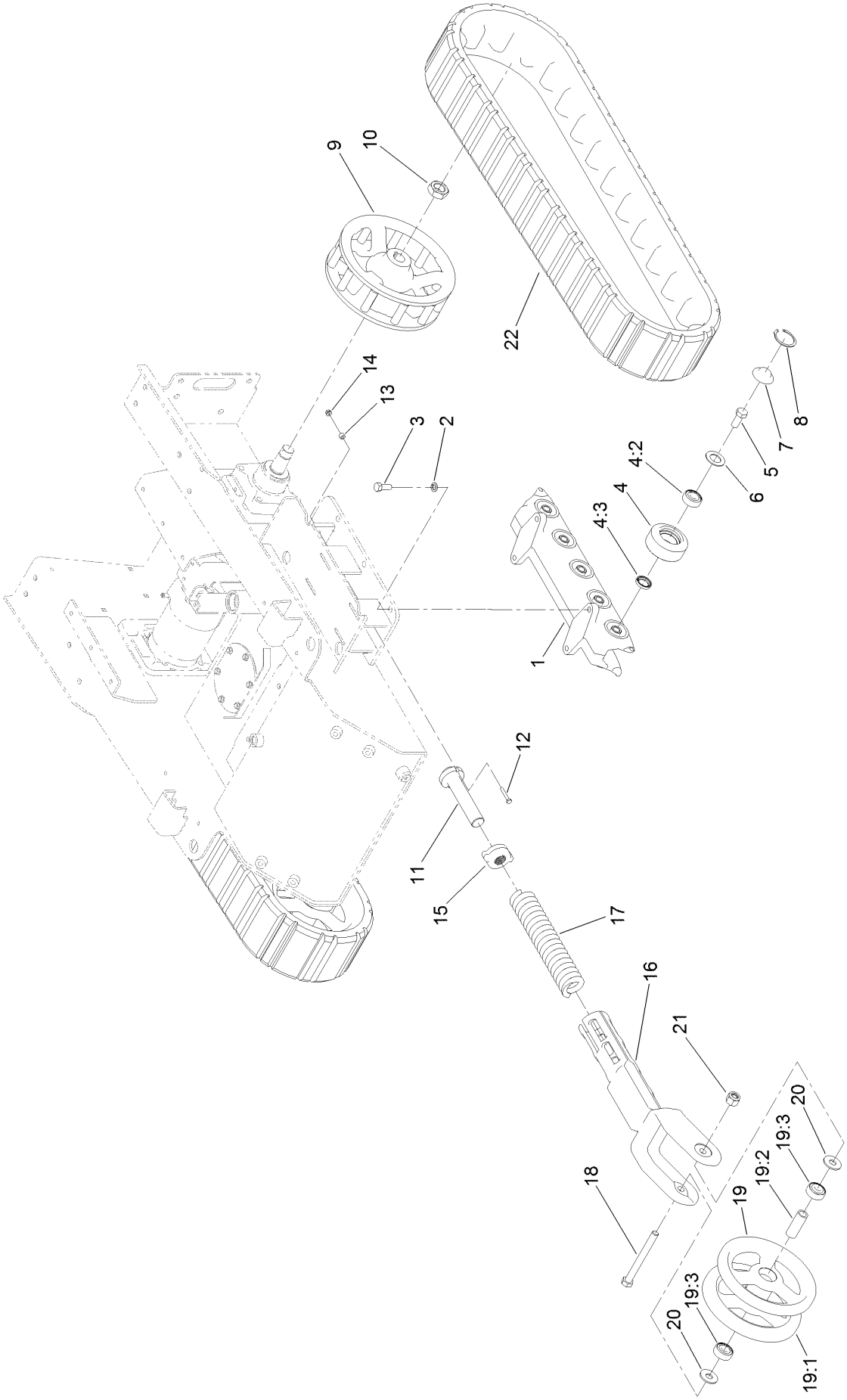

Track and Traction Assembly (continued)

Ref.	Part Number	Qty.	Description
1	117-1310-03	2	Guide-Track
2	3253-7	8	Washer-Lock
3	325-5	8	Screw-HH
4	106-7621	20	Road Wheel ASM
4:2	120-5378	1	Bearing-Ball
4:3	253-118	1	Seal-Oil
5	327-4	20	Screw-HH
6	106-7585	20	Gasket-Bogie
7	106-7557	20	Cap-Wheel, Bearing
8	106-7595	20	Ring-Snap, Internal
9	108-5643-03	2	Wheel-Drive
10	107-9319	2	Nut-Hex
11	98-9846	2	Bolt-Tensioner
12	321-37	2	Screw-HH
13	98-4799	2	Spacer
14	32128-32	2	Nut-HHF
15	108-4664	2	Block-Tensioner
16	108-4691-03	2	Arm-Tensioner
17	95-3624	2	Spring-Compression
18	327-17	2	Screw-HH
19	104-5745	2	Tensioner Wheel ASM
19:1	104-5747-03	1	Wheel-Tensioner
19:2	98-9835	1	Spacer-Wheel, Tensioner
19:3	120-5378	2	Bearing-Ball
20	3256-7	4	Washer-Flat
21	3296-24	2	Nut-Hex
22	136-5847	2	Track

Control Panel Assembly

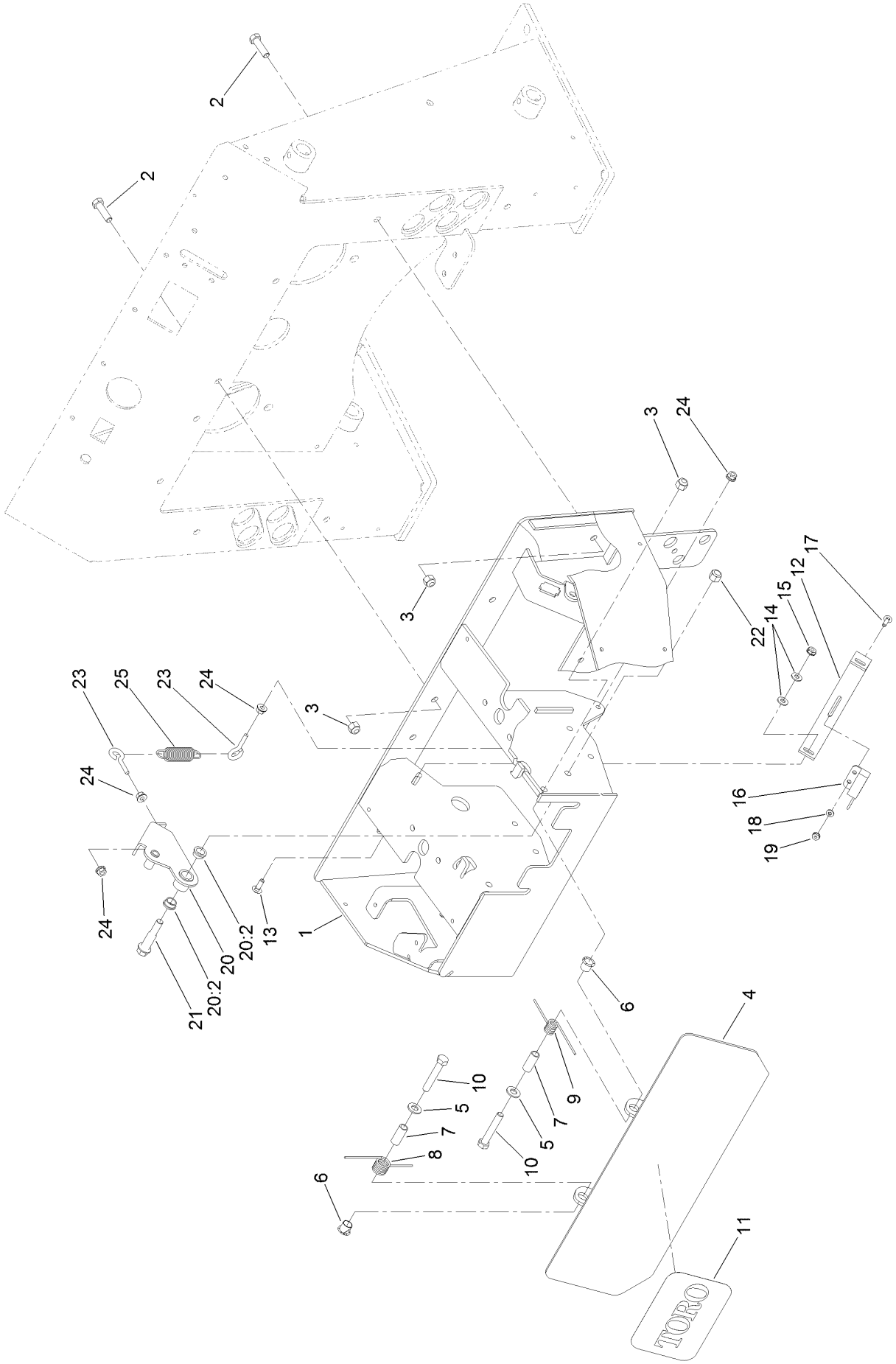

Control Panel Assembly (continued)

Ref.	Part Number	Qty.	Description
1	110-0228-01	1	Panel-Control
2	323-7	5	Screw-HH
3	3296-39	7	Nut-Lock, NI
4	112-2786-03	1	Plate-Reverse
5	3256-24	2	Washer-Flat
6	256-257	2	Bushing-Nyliner
7	114-1337	2	Spacer-Spring
8	98-8424	1	Spring-Torsion, RH
9	98-8425	1	Spring-Torsion, LH
10	323-11	2	Screw-HH
11	105-1217	1	Decal
12	100-1263	1	Plate-Switch
13	3229-1	2	Bolt-CARR
14	3256-22	4	Washer-Flat
15	32149-2	2	Nut-Keps
16	100-1270	1	Switch-Proximity
17	3229-20	2	Screw-CARR
18	3256-51	2	Washer-Flat
19	32149-7	2	Nut-Keps
20	100-4203	1	Neutral Centering Lever ASM
20:2	256-156	2	Bushing-Flange
21	66-0560	1	Bolt-Shoulder
22	3296-6	1	Nut-Lock
23	71-2870	2	Bolt-Eye
24	32128-32	4	Nut-HHF
25	108-4724	1	Spring-Extension

Traction Control Assembly

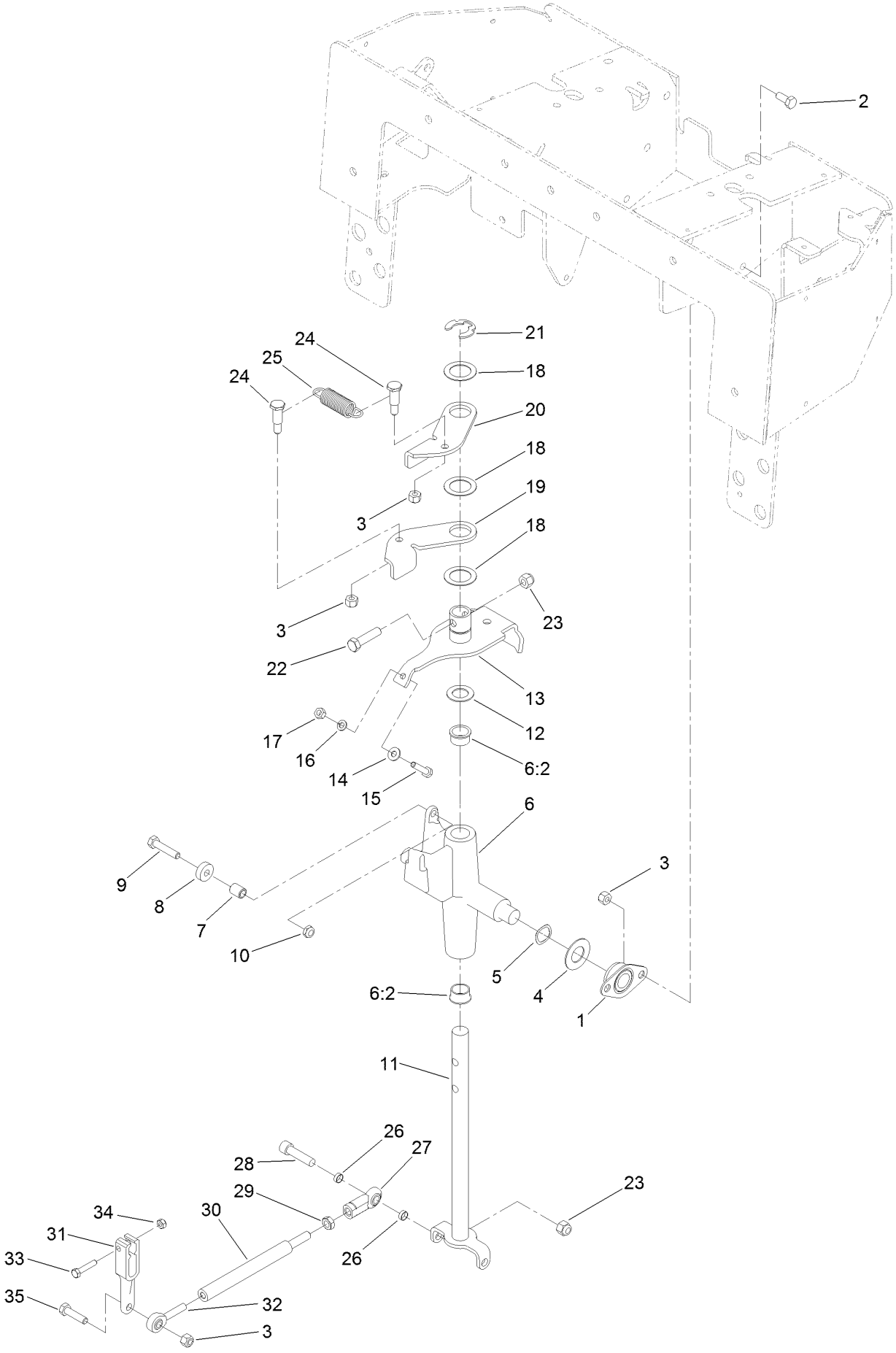

Traction Control Assembly (continued)

Ref.	Part Number	Qty.	Description
1	27-2320	2	Bearing
2	322-3	4	Screw-HH
3	3296-29	8	Nut-Lock, NI
4	3256-39	2	Washer-Flat
5	95-3703	2	Washer-Spring, Wave
6	106-5737	1	Control Support ASM
6:2	256-252	2	Bearing-Flange
7	88-7450	1	Spacer-Lever, Control
8	251-259	1	Bearing-Ball
9	322-7	1	Screw-HH
10	3296-47	1	Nut-Lock, NI
11	117-6335	1	Rod-Drive
12	257-8	1	Washer-Thrust
13	112-2783	1	Lever-Pivot
14	3256-22	1	Washer-Flat
15	114-0282	1	Screw-HH
16	3253-3	1	Washer-Lock
17	3217-5	1	Nut-Hex
18	108-9743	3	Washer-Plain
19	98-8407	1	Lever-Return, RH
20	98-8408	1	Lever-Return, LH
21	32151-91	1	Ring-Retaining
22	323-8	1	Screw-HH
23	3296-39	3	Nut-Lock, NI
24	63-2650	2	Screw-Shoulder
25	108-4724	1	Spring-Extension
26	117-9915	4	Spacer
27	103-1167	2	Joint-Ball End, LH
28	3274-2	2	Screw-HSH
29	3220-16	2	Nut-Hex Jam, LH
30	117-9900	2	Rod-Linkage
31	117-3964-03	2	Arm-Control, Pump
32	117-9969	2	Bearing-Rod End, RH
33	33113-030	2	Screw-HH
34	33023-00	2	Nut-Lock
35	322-6	2	Screw-HH

Control Handle and Reference Bar Assembly

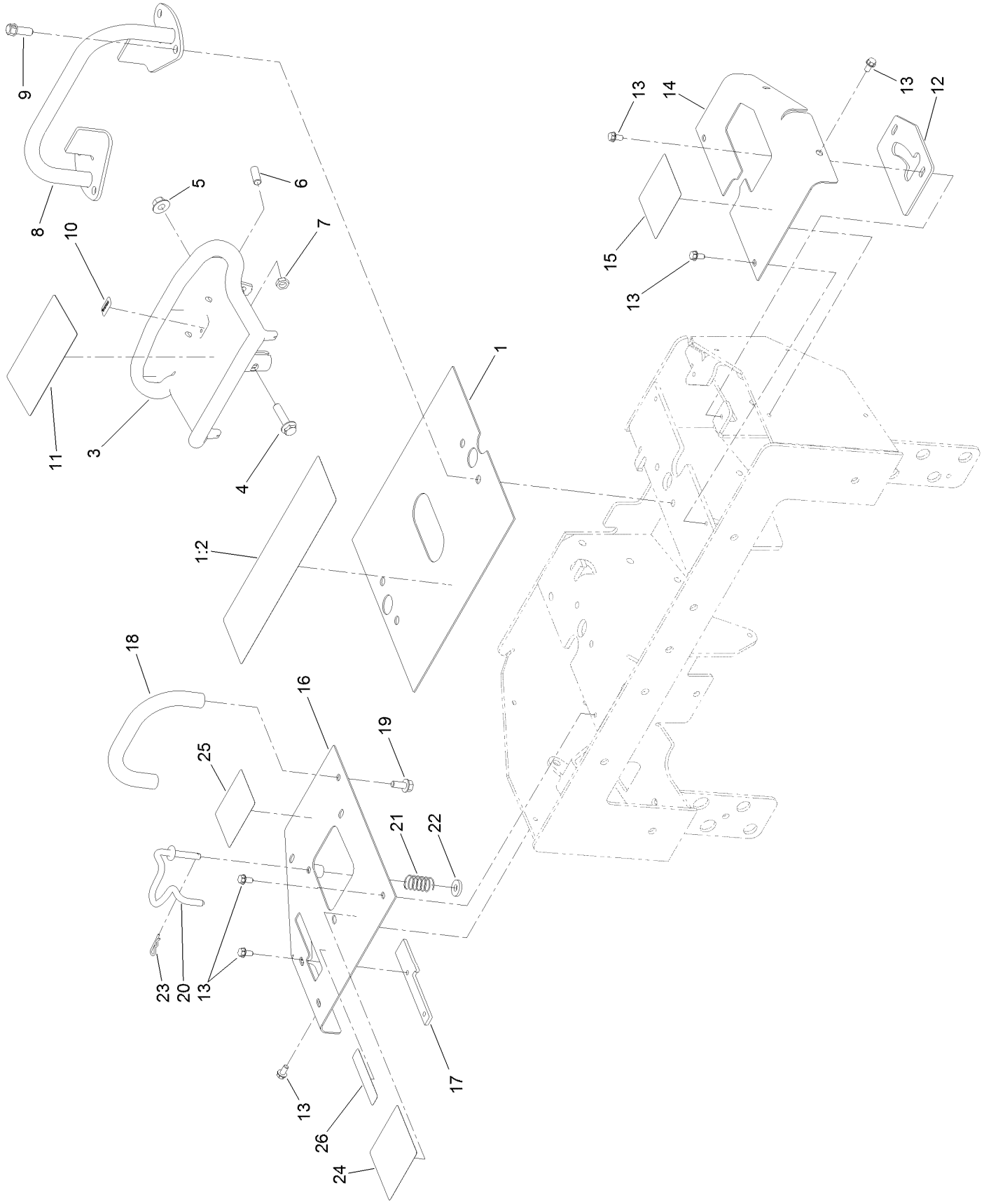

Control Handle and Reference Bar Assembly (continued)

Ref.	Part Number	Qty.	Description
1	108-4643	1	Center Panel ASM
1:2	115-4860	1	Decal-Danger
3	120-5380-03	1	Handle-Control
4	3234-18	1	Screw-HHF
5	32128-43	1	Nut-Flange
6	3247-6	2	Screw-Set
7	3218-3	2	Nut-Jam
8	106-7715	1	Bar-Reference
9	95-1726	4	Screw-Taptite
10	98-1459	1	Decal
11	115-4020	1	Decal-Traction
12	112-2749-01	1	Plate-Stop
13	9266714	11	Screw-HWH
14	112-2737-01	1	Panel-LH
15	115-4861	1	Decal-Control, Auxiliary
16	115-4836-01	1	Panel-RH
17	112-2691	1	Plate-Locking, Brake
18	112-2620	1	Bar-Reference
19	3234-5	2	Screw-HHF
20	115-4580	1	Rod-Interlock
21	85-6750	1	Spring-Control
22	88-7200	1	Washer-Flat
23	3290-307	1	Pin-Cotter
24	115-4857	1	Decal-Control, Loader
25	115-4862	1	Decal-Loader Lock
26	115-4859	1	Decal-Brake

Parking Brake Assembly

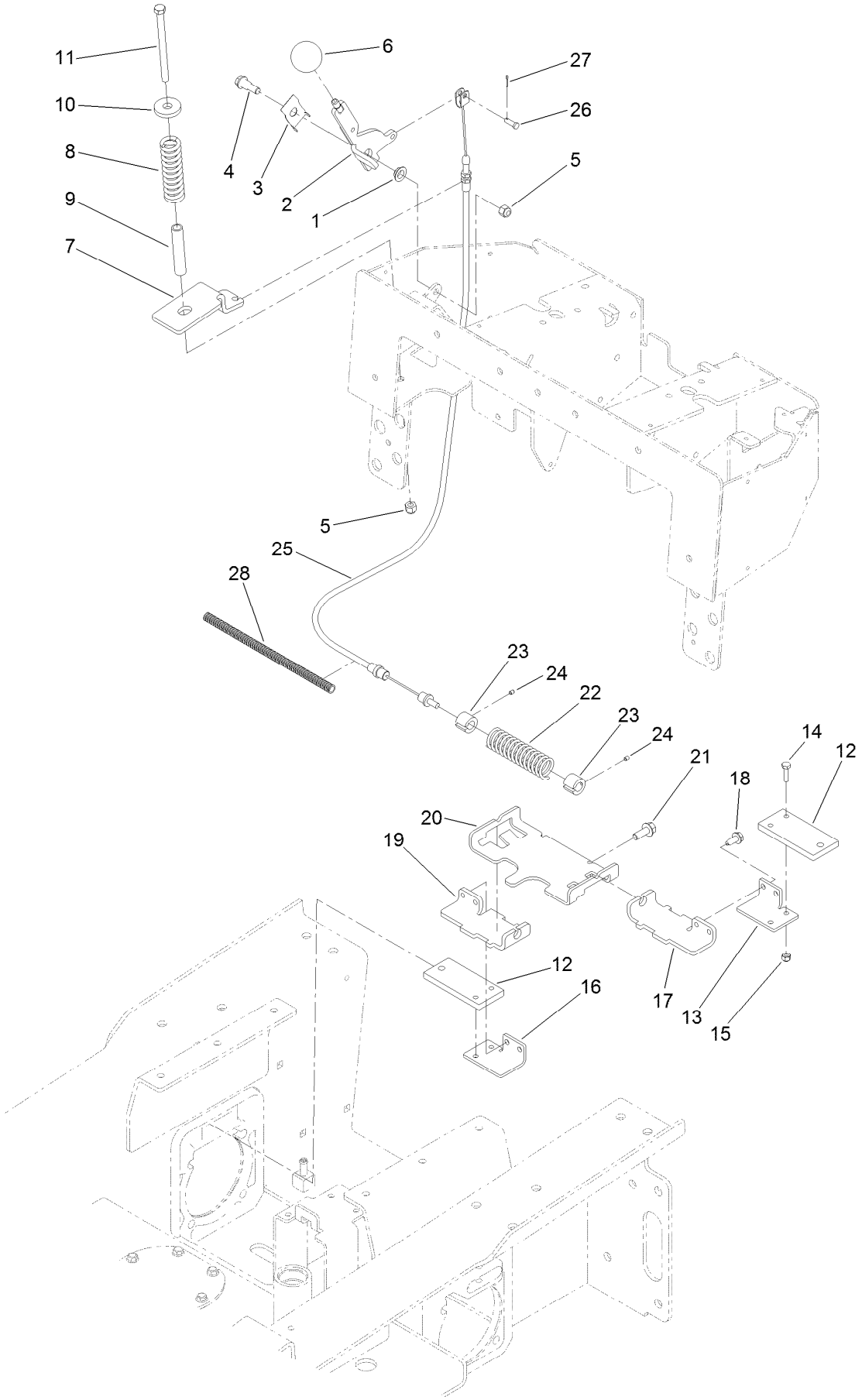

Parking Brake Assembly (continued)

Ref.	Part Number	Qty.	Description
1	93-2368	1	Bushing-Flange
2	112-2694-03	1	Handle-Brake
3	112-2695	1	Spring-Leaf
4	94-6177	1	Bolt-Shoulder
5	3296-39	2	Nut-Lock, NI
6	233-21	1	Knob
7	115-4854-03	1	Bracket-Cable, Spring
8	114-1254	1	Spring-Compression
9	114-1255	1	Spacer-Spring
10	98-0691	1	Washer-Hardened
11	323-39	1	Screw-HH
12	112-2735-03	2	Plate-Brake
13	112-2734-03	1	Bar-Link, Brake LH
14	321-6	4	Screw-HH
15	3296-42	4	Nut-Lock, NI
16	112-2789-03	1	Bar-Link, Brake RH
17	112-2733-03	1	Bracket-Mounting, Brake LH
18	32104-32	4	Screw-HWH
19	112-2788-03	1	Bracket-Mounting, Brake RH
20	110-0224-03	1	Support-Bar, Brake
21	3234-11	2	Screw-HHF
22	100-1678	1	Spring
23	100-6274	2	Tube-Guide
24	3245-20	2	Screw-HSH
25	112-2791	1	Cable-Brake
26	283-67	1	Pin-Clevis
27	3272-1	1	Pin-Cotter
28	100-4697	1	Tube-Convoluted

Loader Arm Assembly

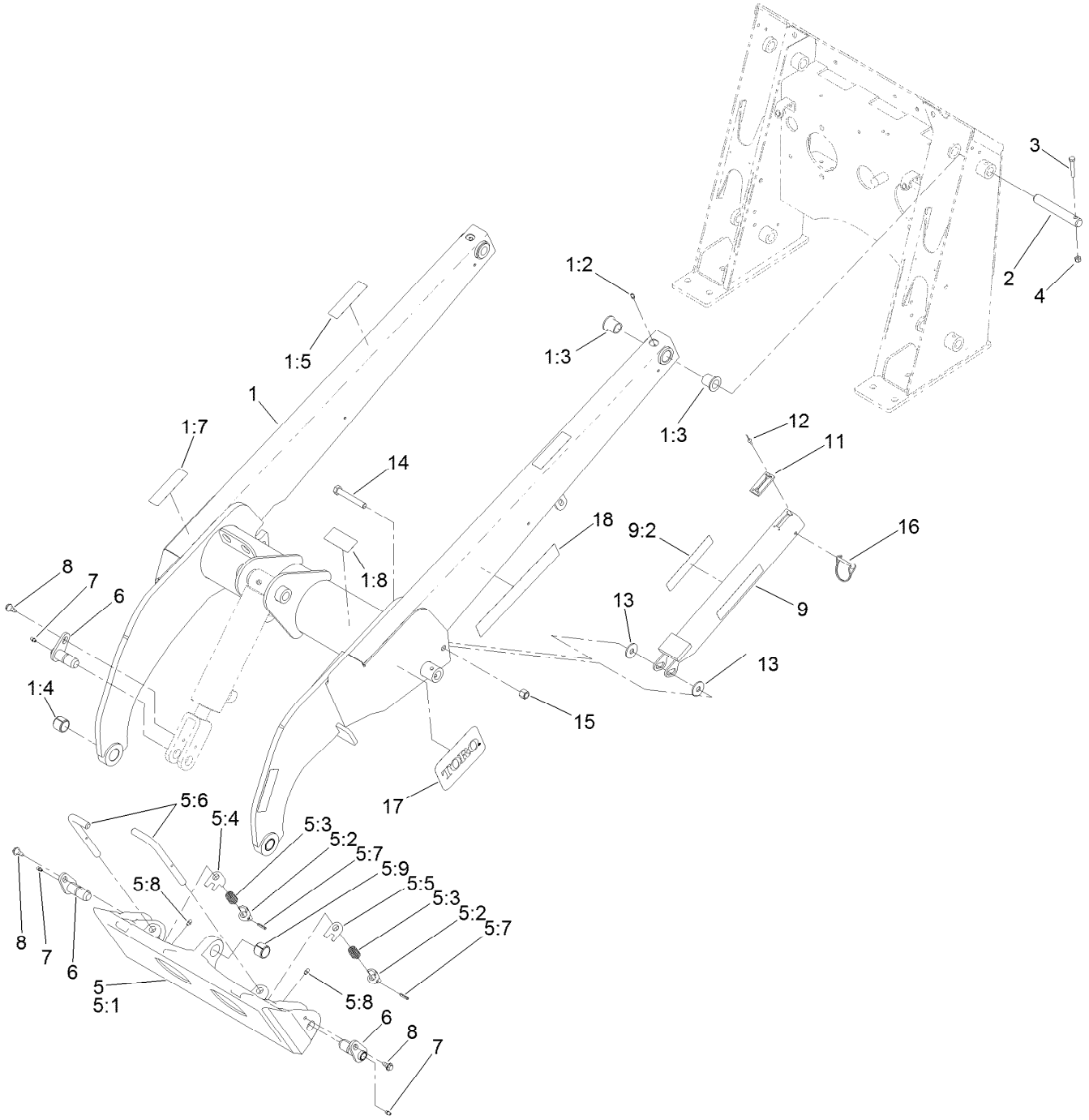

Loader Arm Assembly (continued)

Ref.	Part Number	Qty.	Description
1	108-4638	1	Loader Arm ASM
1:2	302-5	2	Fitting-Grease
1:3	95-3577	4	Bushing
1:4	98-4871	2	Bushing-Tension
1:5	100-8821	4	Decal-Warning, Pinch
1:7	115-4855	1	Decal-Caution
1:8	100-8822	1	Decal-No Rider
2	104-2849	2	Pin-Locking
3	322-10	2	Screw-HH
4	3296-29	2	Nut-Lock, NI
5	132-8418	1	Quick Attach ASM
5:1	130-7708-03	1	Mount-Qtach
5:2	105-0246	2	Cam
5:3	98-4694	2	Spring-Compression
5:4	104-5909	1	Stop-RH
5:5	104-5903	1	Stop-LH
5:6	132-8419	2	Pin-Locking
5:7	3285-1	2	Pin-Grooved
5:8	302-5	2	Fitting-Grease
5:9	98-4871	1	Bushing-Tension
6	112-2609	3	Pin-Pivot
7	302-5	3	Fitting-Grease
8	99-5105	3	Bolt-Shoulder
9	108-4639	1	Locking Arm ASM
9:2	115-4858	2	Decal-Danger
11	98-0083	1	Stop-Rubber
12	95-1687	4	Rivet
13	68-1440	2	Washer-Rubber
14	325-14	1	Screw-HH
15	3296-23	1	Nut-Lock, NI
16	100-1663	1	Pin-Hitch
17	105-1217	2	Decal
18	115-4868	2	Decal

Loader Arm Hydraulic Assembly

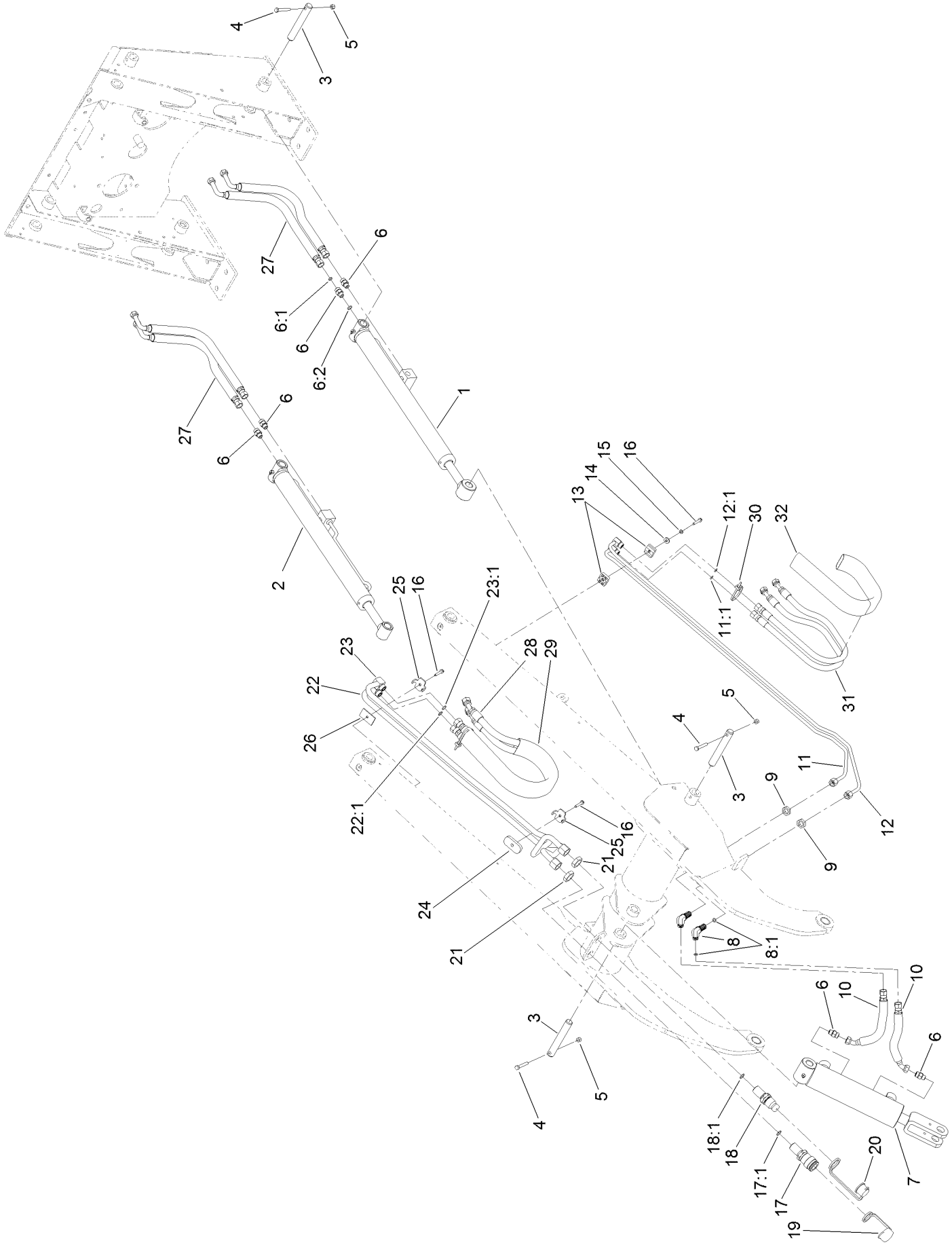

Loader Arm Hydraulic Assembly (continued)

Ref.	Part Number	Qty.	Description
1	117-1831	1	LH Lift Cylinder ASM
2	117-1832	1	RH Lift Cylinder ASM
3	104-2849	5	Pin-Locking
4	322-10	5	Screw-HH
5	3296-29	5	Nut-Lock, NI
6	340-2	6	Fitting-Straight
6:1	237-22	1	O-Ring
6:2	237-42	1	O-Ring
7	117-1833	1	Cylinder-Tilt
8	340-154	2	Union-Bulkhead
8:1	237-22	2	O-Ring
9	340-70	2	Nut-Lock
10	98-0207	2	Hose-HYD
11	106-9364	1	HYD Tube ASM
11:1	237-22	1	O-Ring
12	106-9365	1	HYD Tube ASM
12:1	237-22	1	O-Ring
13	56-7973	2	Clamp-Tube
14	3256-2	1	Washer-Flat
15	3253-3	1	Washer-Lock
16	94-2691	3	Screw-HWH
17	105-8394	1	Bulkhead Coupler ASM
17:1	237-65	1	O-Ring
18	105-8395	1	Bulkhead Nipple ASM
18:1	237-65	1	O-Ring
18:2	100-6120	1	Seal Kit ●
19	100-8816	1	Cap-Dust, Coupler
20	100-8815	1	Cap-Dust, Nipple
21	340-74	2	Nut-Lock, Bulkhead
22	108-6319	1	HYD Tube ASM
22:1	237-30	1	O-Ring
23	112-2563	1	HYD Tube ASM
23:1	237-30	1	O-Ring
24	112-2565	1	Plate-Hardline
25	98-0237	2	Plate-Clamp, Tube
26	106-9366	1	Spacer-Hardline
27	98-0216	4	Hose-HYD
28	98-0242	2	Hose-HYD
29	100-6128	1	Sleeve-Protective
30	3290-378	2	Tie-Cable
31	98-0213	2	Hose-HYD
32	100-6127	1	Sleeve-Protective

● Not illustrated

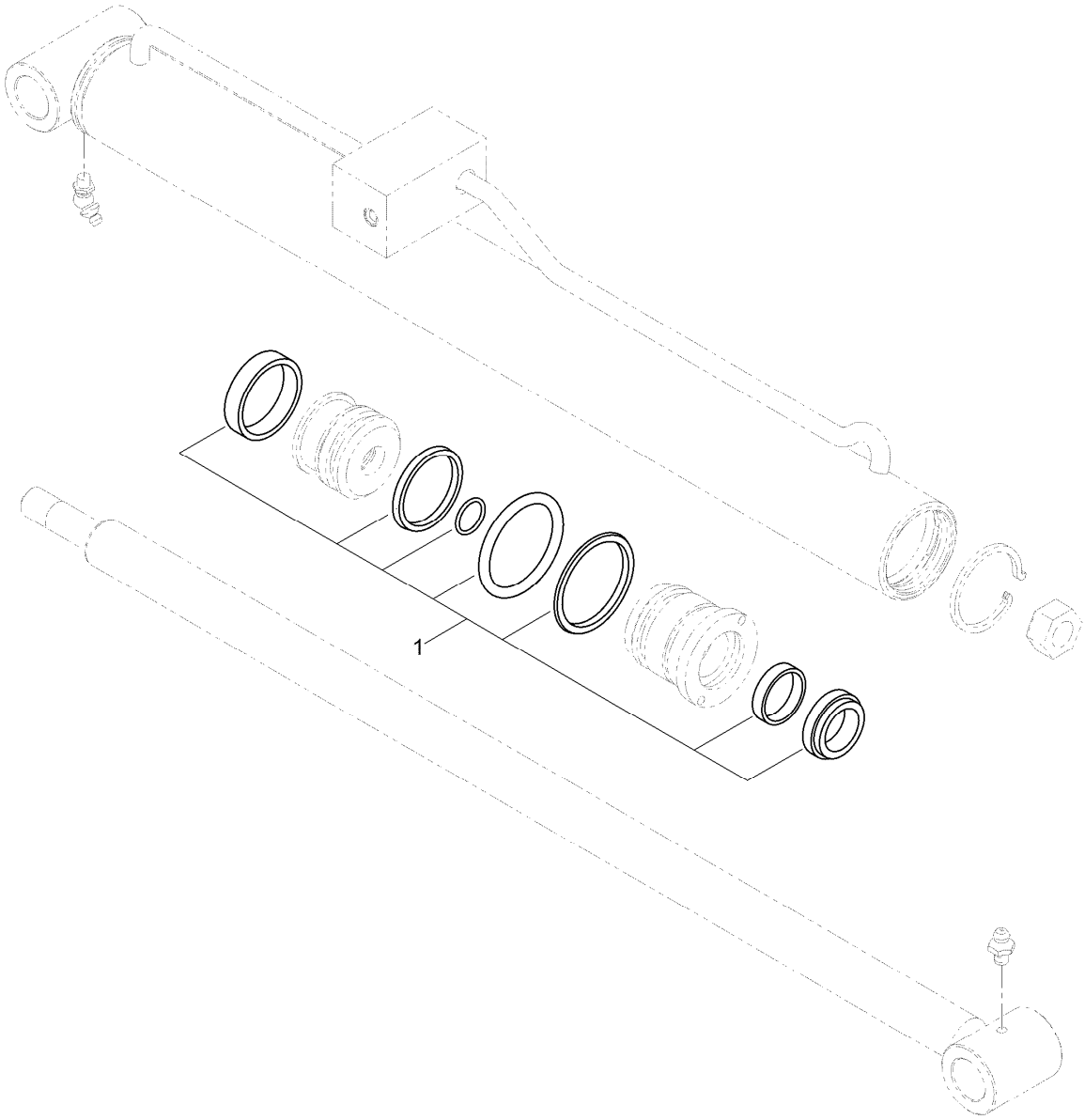

Left Hand Hydraulic Lift Cylinder Assembly No. 117-1831

Ref.	*Part Number*	*Qty.*	*Description*
1	117-1841	1	Seal Kit

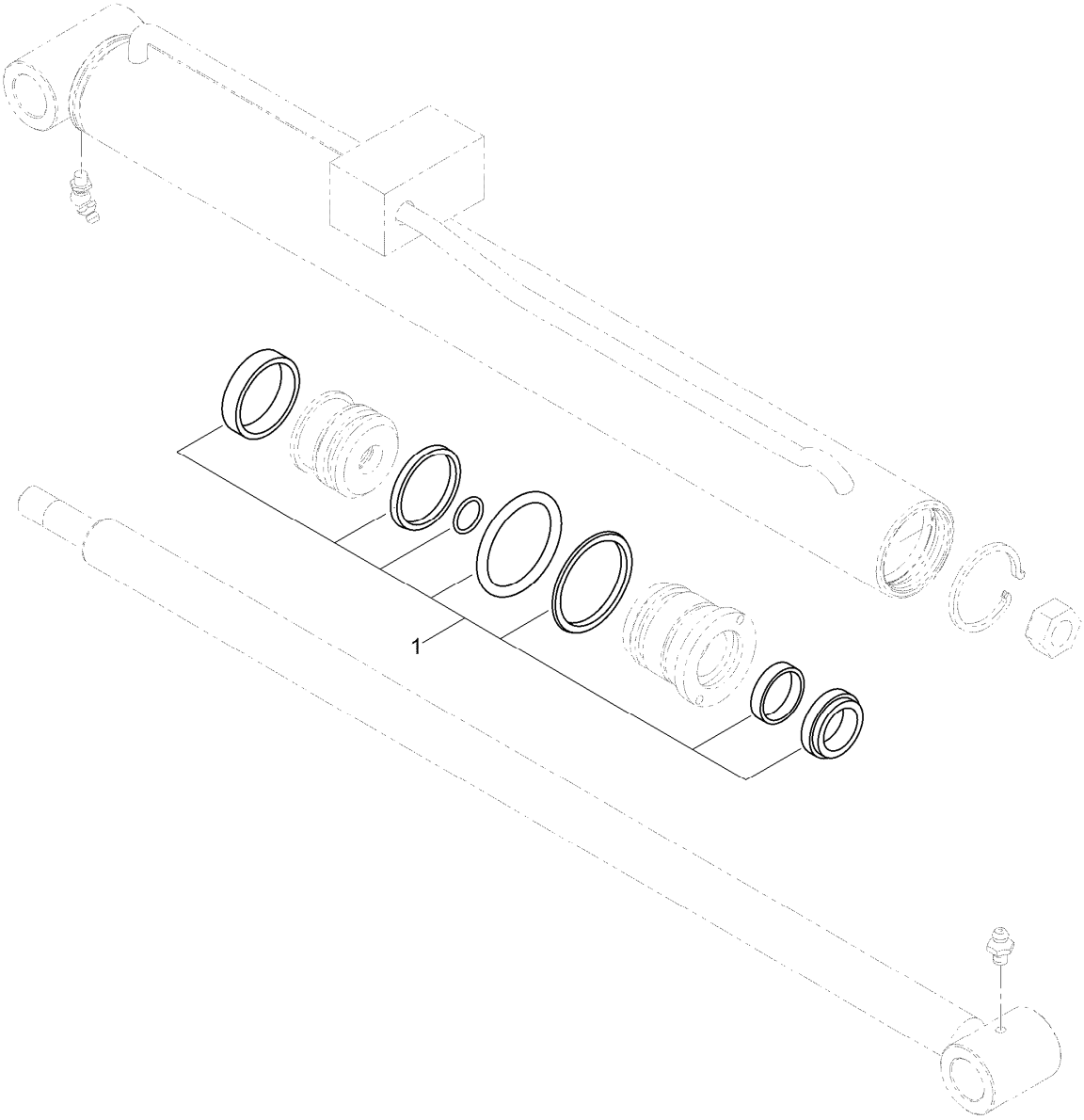

Right Hand Hydraulic Lift Cylinder Assembly No. 117-1832

Ref.	*Part Number*	*Qty.*	*Description*
1	117-1841	1	Seal Kit

Hydraulic Cylinder Assembly No. 117-1833

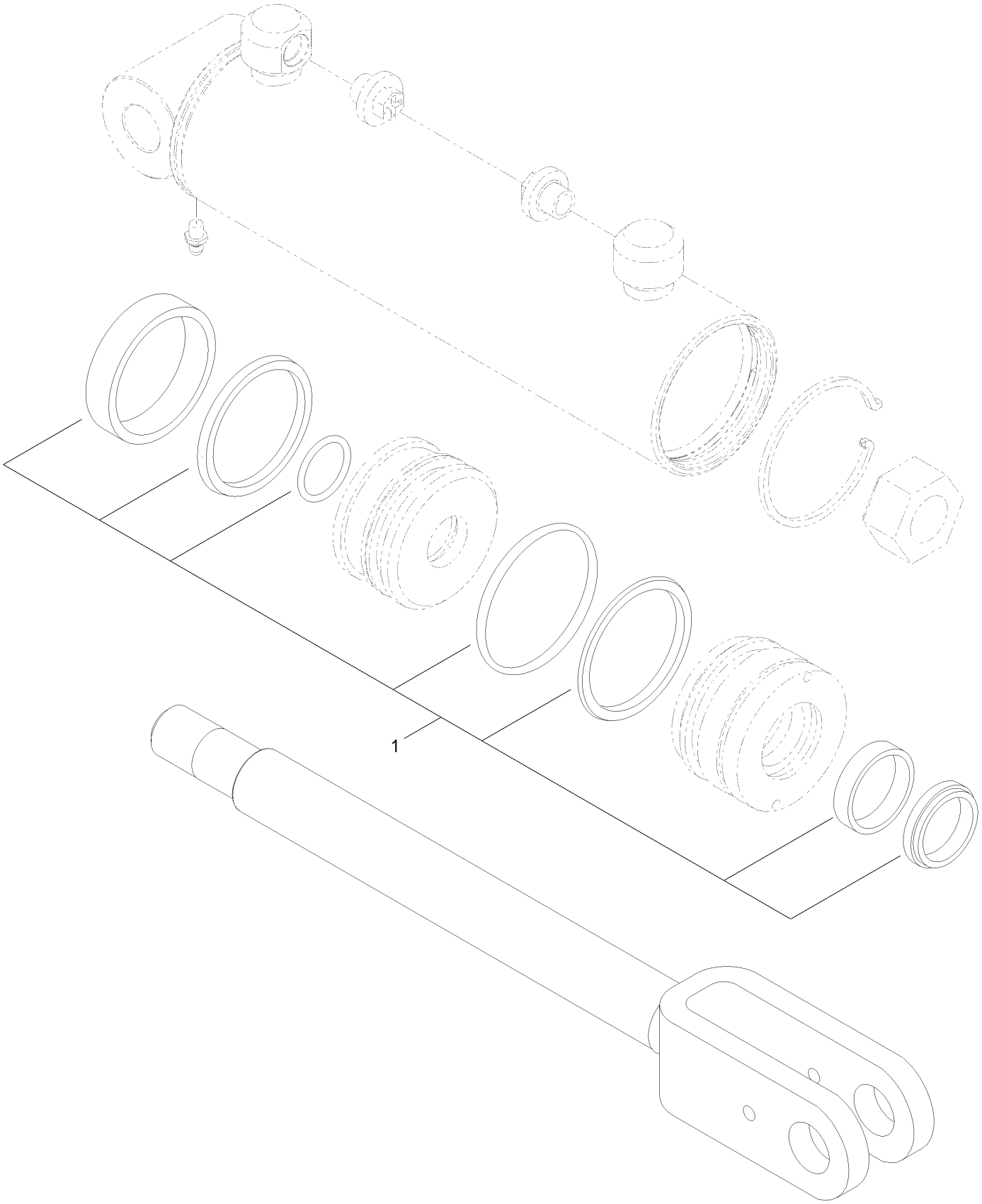

Hydraulic Cylinder Assembly No. 117-1833 (continued)

Ref.	*Part Number*	*Qty.*	*Description*
1	117-1838	1	Seal Kit

Grill Assembly

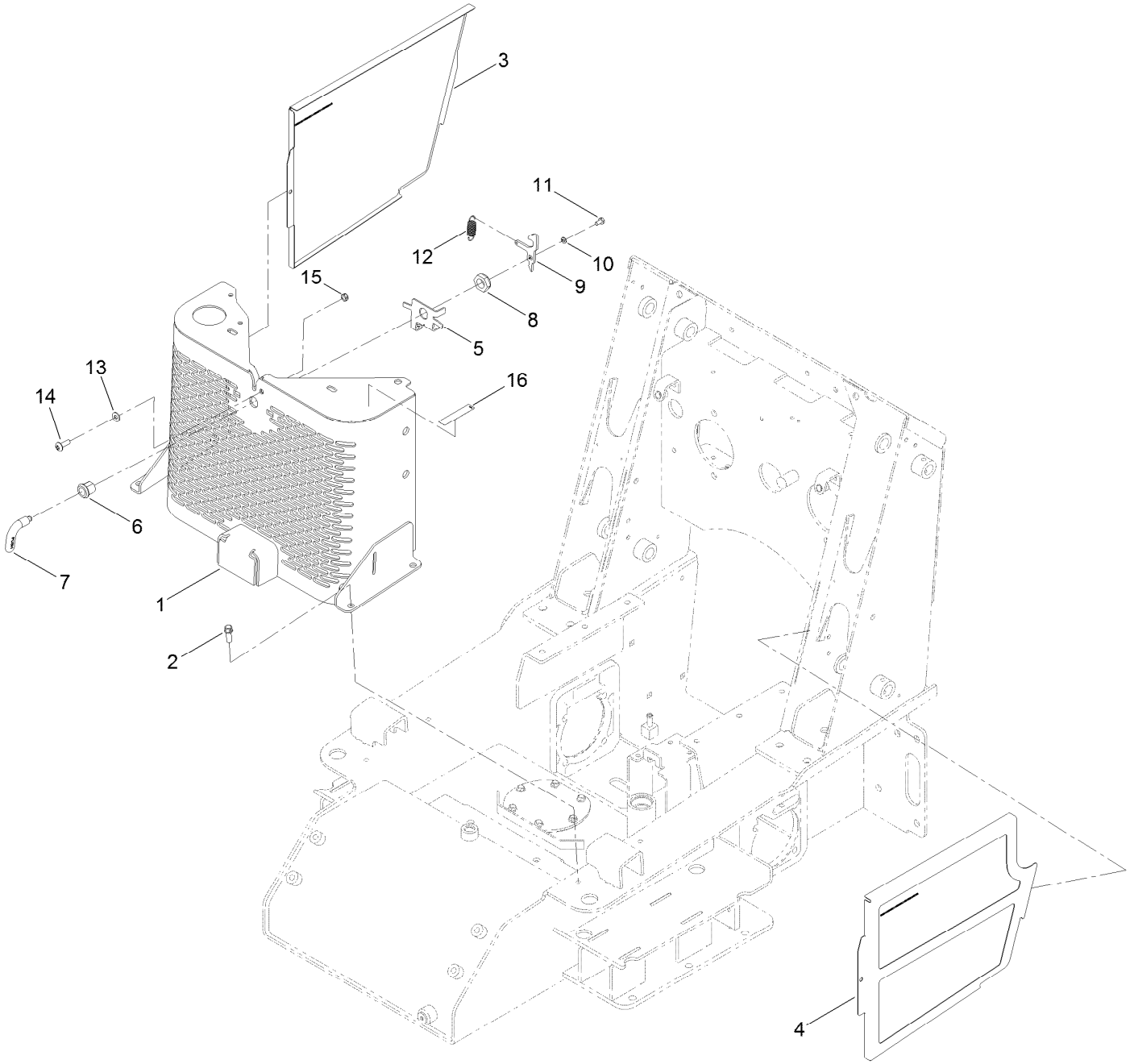

Grill Assembly (continued)

Ref.	Part Number	Qty.	Description
1	117-1318-03	1	Grill
2	95-1726	4	Screw-Taptite
3	117-9963-03	1	RH Side Panel
4	117-9964-03	1	LH Side Panel
5	106-5729	1	Bracket-Latch
6	106-9335	1	Housing-Latch
7	108-5639	1	Handle-Latch
8	3296-60	1	Nut-Lock, NI
9	106-5728	1	Cam-Latch
10	3253-3	1	Washer-Lock
11	321-2	1	Screw-HH
12	104-0869	1	Spring
13	3256-2	1	Washer-Flat
14	107-8021	1	Screw-PTH
15	3296-47	1	Nut-Lock, NI
16	93-6681	1	Decal-Warning, Fan

Hood Assembly

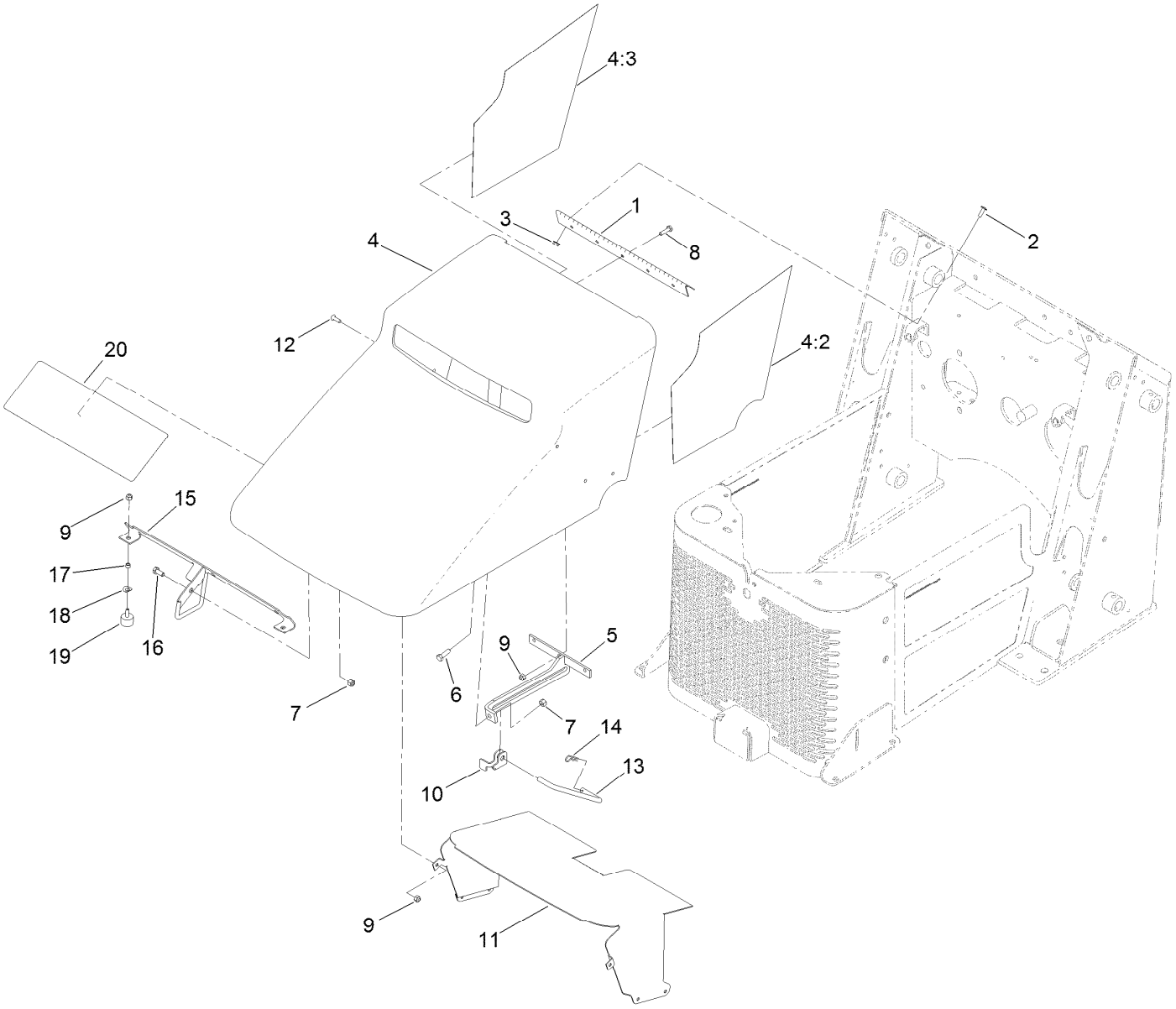

Hood Assembly (continued)

Ref.	Part Number	Qty.	Description
1	100-1284	1	Hinge-Hood
2	9114604	4	Screw-Head, Truss
3	32128-33	4	Nut-HF
4	112-2460	1	Hood ASM
4:2	112-2464	1	Foiltape-LH
4:3	112-2465	1	Foiltape-RH
5	112-2448-03	1	Bracket-Rod, Prop
6	322-5	1	Screw-HH
7	3296-29	5	Nut-Lock, NI
8	321-6	5	Screw-HH
9	3296-42	13	Nut-Lock, NI
10	115-0714	1	Bracket-Latch, Locking
11	108-6286	1	Baffle-Hood
12	3258-166	6	Screw-PRH
13	108-6357	1	Rod-Support, Hood
14	3290-250	1	Pin-Cotter
15	108-6287-03	1	Rod Latch ASM
16	322-3	4	Screw-HH
17	106-9308	2	Spacer
18	121-4605	2	Washer-Spring
19	1-523420	2	Bumper
20	132-8631	1	Decal-Service
20	136-5767	1	Decal-Service, French
20	136-5768	1	Decal-Service, German
20	136-5769	1	Decal-Service, Spanish
20	136-5770	1	Decal-Service, Italian
20	136-5771	1	Decal- Service, Dutch
20	136-5772	1	Decal-Service, Polish
20	136-5773	1	Decal-Service, Russian
20	136-5774	1	Decal-Service, Slovakian

Hydraulic Pump and Filter Assembly

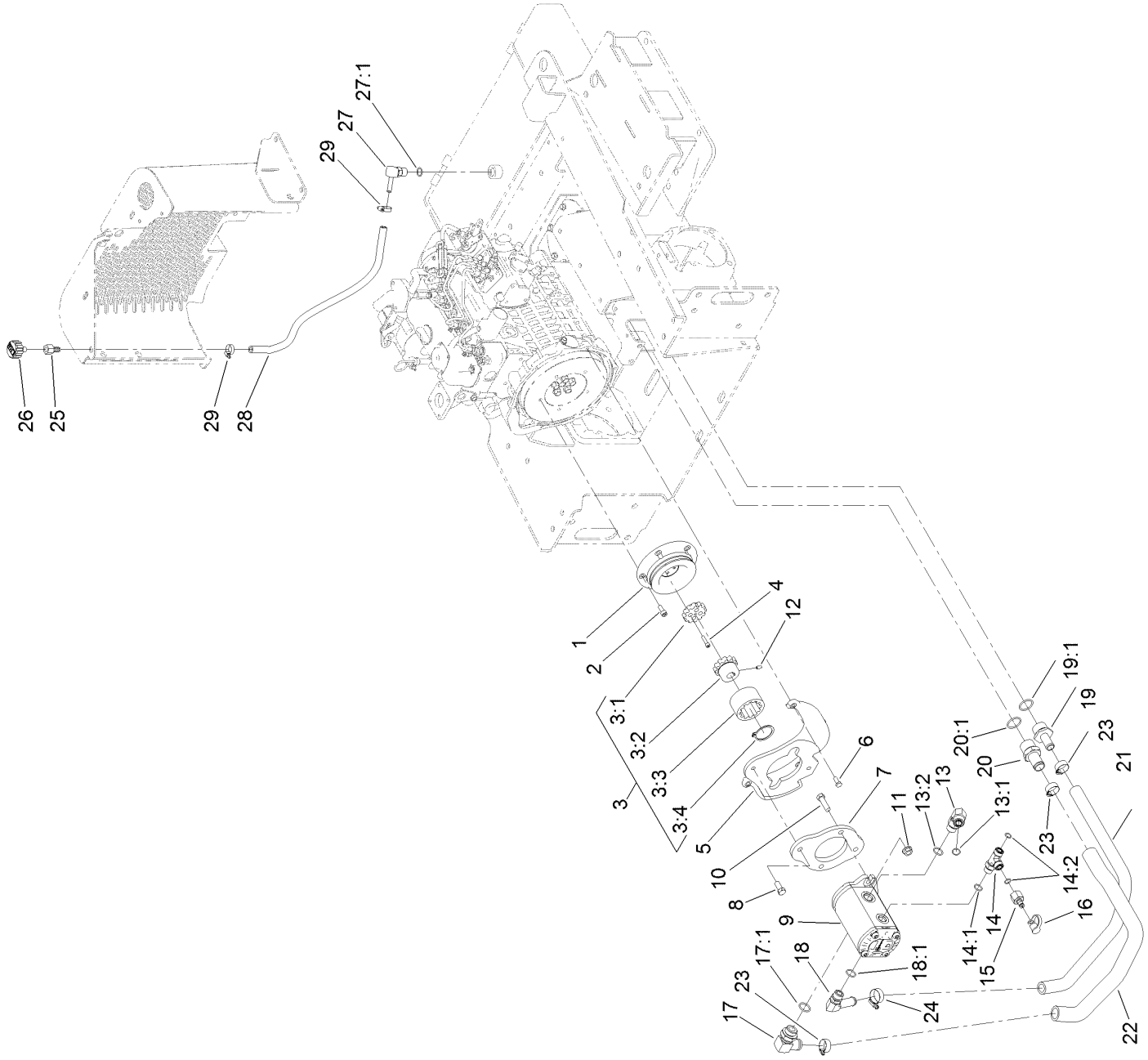

Hydraulic Pump and Filter Assembly (continued)

Ref.	Part Number	Qty.	Description
1	112-2568-03	1	Pulley
2	108-6343	5	Screw-Cap, HSH
3	108-6314	1	Coupling ASM
3:1	106-9562	1	Hub-Coupling
3:2	106-9587	1	Sleeve-Hub
3:3	106-9561	1	Sleeve-Coupling
3:4	108-6383	1	Ring-Snap, Coupling
4	3274-26	4	Screw-HSH
5	108-6235-03	1	Pump-Mount
6	33114-020	4	Screw-HH
7	108-6211-03	1	Plate-Mount, Pump
8	324-4	2	Screw-HH
9	106-9589	1	Pump-HYD
10	324-6	2	Screw-HH
11	32128-42	2	Nut-HF
12	3245-9	1	Screw-Set, HSH
13	340-17	1	Fitting-Elbow, 90 DEG
13:1	237-65	1	O-Ring
13:2	237-80	1	O-Ring
14	340-109	1	Fitting-Tee
14:1	237-79	1	O-Ring
14:2	237-30	2	O-Ring
15	100-5616	1	Fitting
16	354-79	1	Cap-Dust
17	100-4202	1	Fitting-90
17:1	237-81	1	O-Ring
18	87-8170	1	Fitting-90
18:1	237-80	1	O-Ring
19	99-6932	1	Fitting-STR
19:1	237-117	1	O-Ring
20	354-78	1	Fitting-STR
20:1	237-146	1	O-Ring
21	108-6315	1	Hose-Formed, Suction
22	108-6316	1	Hose-Formed, Suction
23	2412-34	3	Clamp-Hose
24	2412-129	1	Clamp-Hose
25	354-94	1	Fitting-Female, Barbed
26	68-6150	1	Breather
27	354-134	1	Fitting-90
27:1	237-79	1	O-Ring
28	114-8599	1	Hose-Drain, Engine Oil
29	2412-36	2	Clamp-Hose

Hydraulic Pump Assembly No. 106-9589

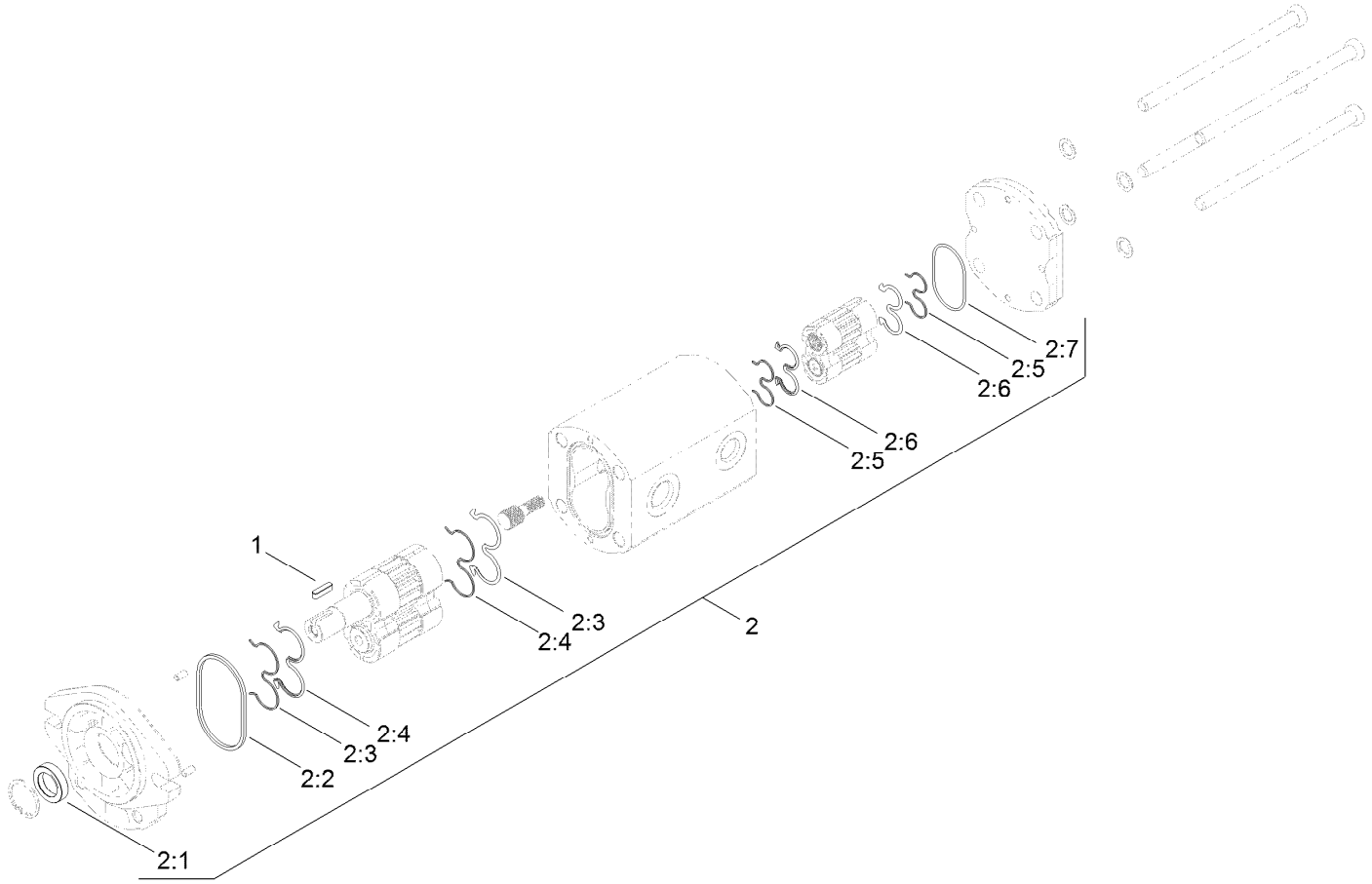

Hydraulic Pump Assembly No. 106-9589 (continued)

Ref.	Part Number	Qty.	Description
1	100-4238	1	Key-Square
2	107-9316	1	Seal Kit
2:1		1	Seal-Shaft ●
2:2		1	Seal-Square ●
2:3		2	Ring-Backup ●
2:4		2	Seal-Gear ●
2:5		2	Ring-Backup ●
2:6		2	Seal-Gear-Rear ●
2:7		1	O-Ring ●

● Not serviced separately

Traction Hydraulic Assembly

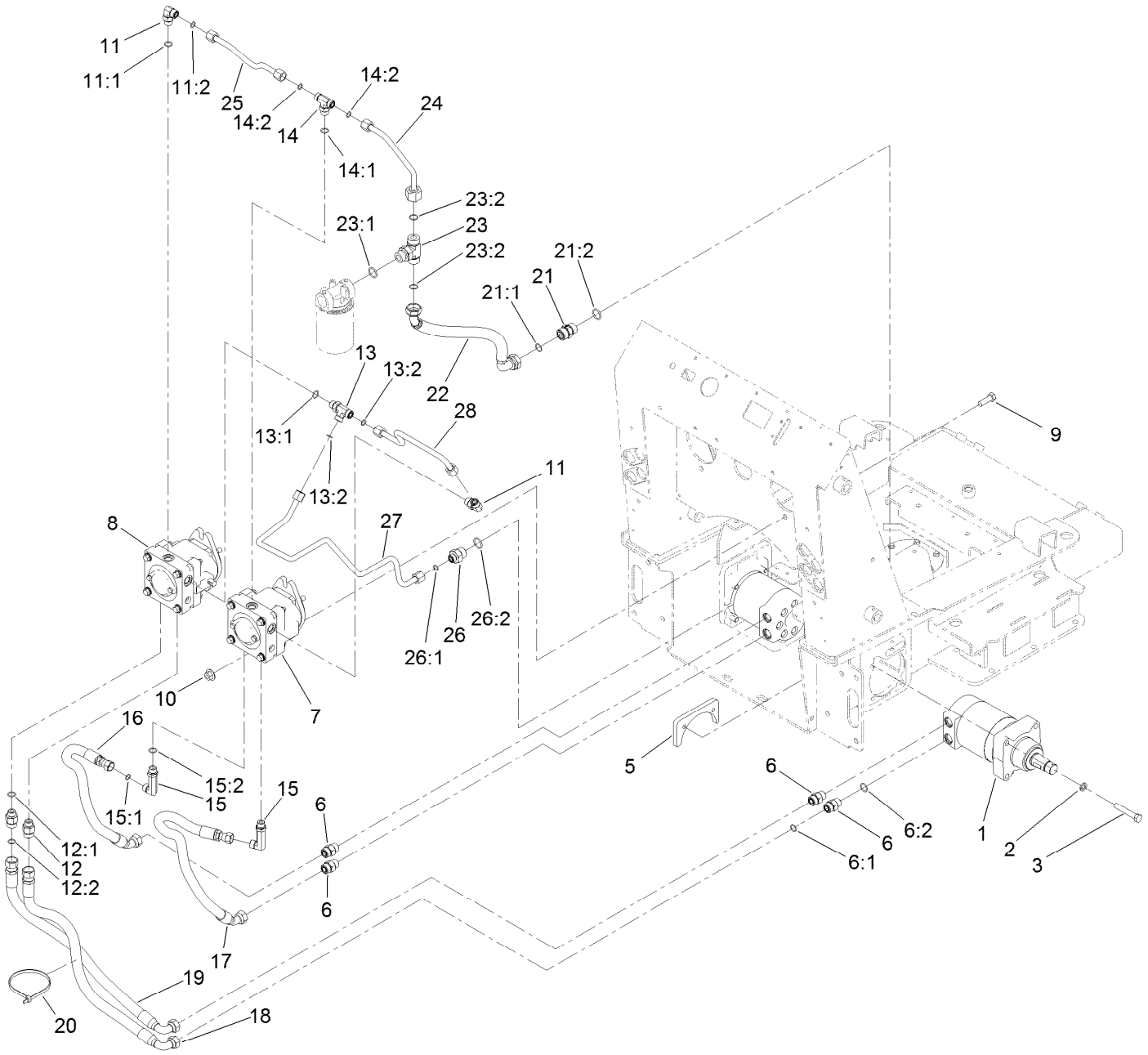

Traction Hydraulic Assembly (continued)

Ref.	Part Number	Qty.	Description
1	106-7654	2	HYD Motor ASM
2	3253-7	8	Washer-Lock
3	115-4845	8	Screw-HH, TAP
5	98-2763-03	2	Plate-Mounting
6	340-7	4	Fitting-Straight
6:1	237-65	1	O-Ring
6:2	237-80	1	O-Ring
7	106-9590	1	Pump-HYD, RH
8	106-9591	1	Pump-HYD, LH
9	325-6	4	Screw-HH
10	32128-52	4	Nut-Lock, Flange
11	340-98	2	Fitting-Elbow, 90 DEG
11:1	237-79	1	O-Ring
11:2	237-30	1	O-Ring
12	340-155	2	Fitting-Straight
12:1	237-79	1	O-Ring
12:2	237-151	1	O-Ring
13	340-109	1	Fitting-Tee
13:1	237-79	1	O-Ring
13:2	237-30	2	O-Ring
14	340-157	1	Fitting-HYD, Tee
14:1	237-79	1	O-Ring
14:2	237-30	2	O-Ring

Ref.	Part Number	Qty.	Description
15	99-6160	2	Fitting-Elbow 90 Long
15:1	237-30	1	O-Ring
15:2	237-79	1	O-Ring
16	107-3632	1	Hose-HYD
17	107-3631	1	Hose-HYD
18	115-4827	1	Hose-HYD
19	115-4826	1	Hose-HYD
20	3334-945	1	Tie-Cable
21	108-6306	1	Valve-Check, HYD
21:1	237-58	1	O-Ring
21:2	237-81	1	O-Ring
22	112-2562	1	Hose-HYD
23	100-4836	1	Fitting-Tee
23:1	237-81	1	O-Ring
23:2	237-58	2	O-Ring
24	107-3634	1	Tube-HYD
25	106-9330	1	Tube-HYD
26	100-4240	1	Fitting-STR
26:1	237-30	1	O-Ring
26:2	237-81	1	O-Ring
27	107-3633	1	Tube-HYD
28	98-0200	1	Tube-HYD

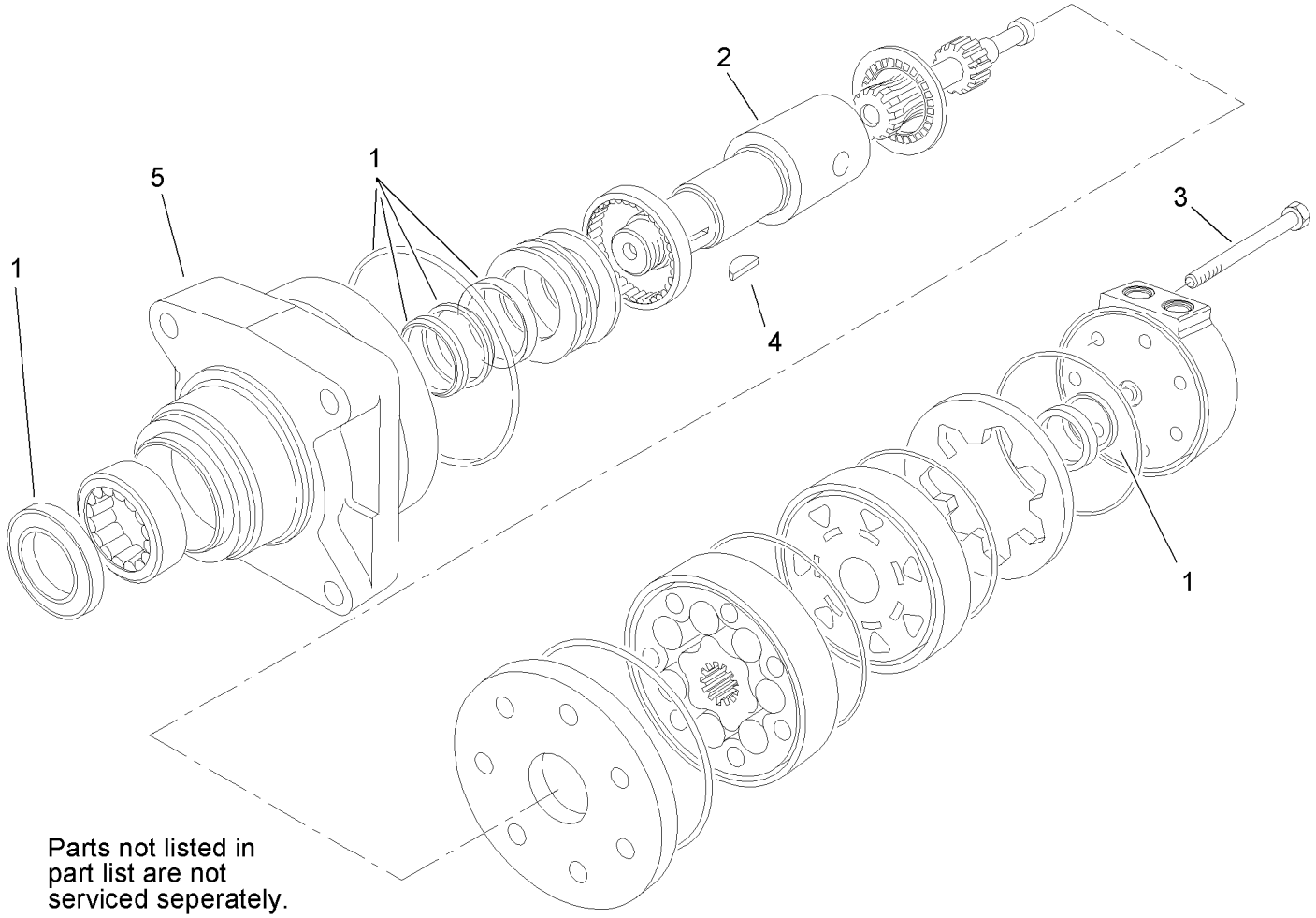

Hydraulic Motor Assembly No. 106-7654

Ref.	*Part Number*	*Qty.*	*Description*
1	100-6131	1	Seal Kit
2	106-7645	1	Coupling-Shaft
3	100-4241	7	Screw-HH
4	3257-42	1	Key-Woodruff
5	108-5634	1	Motor Housing ASM

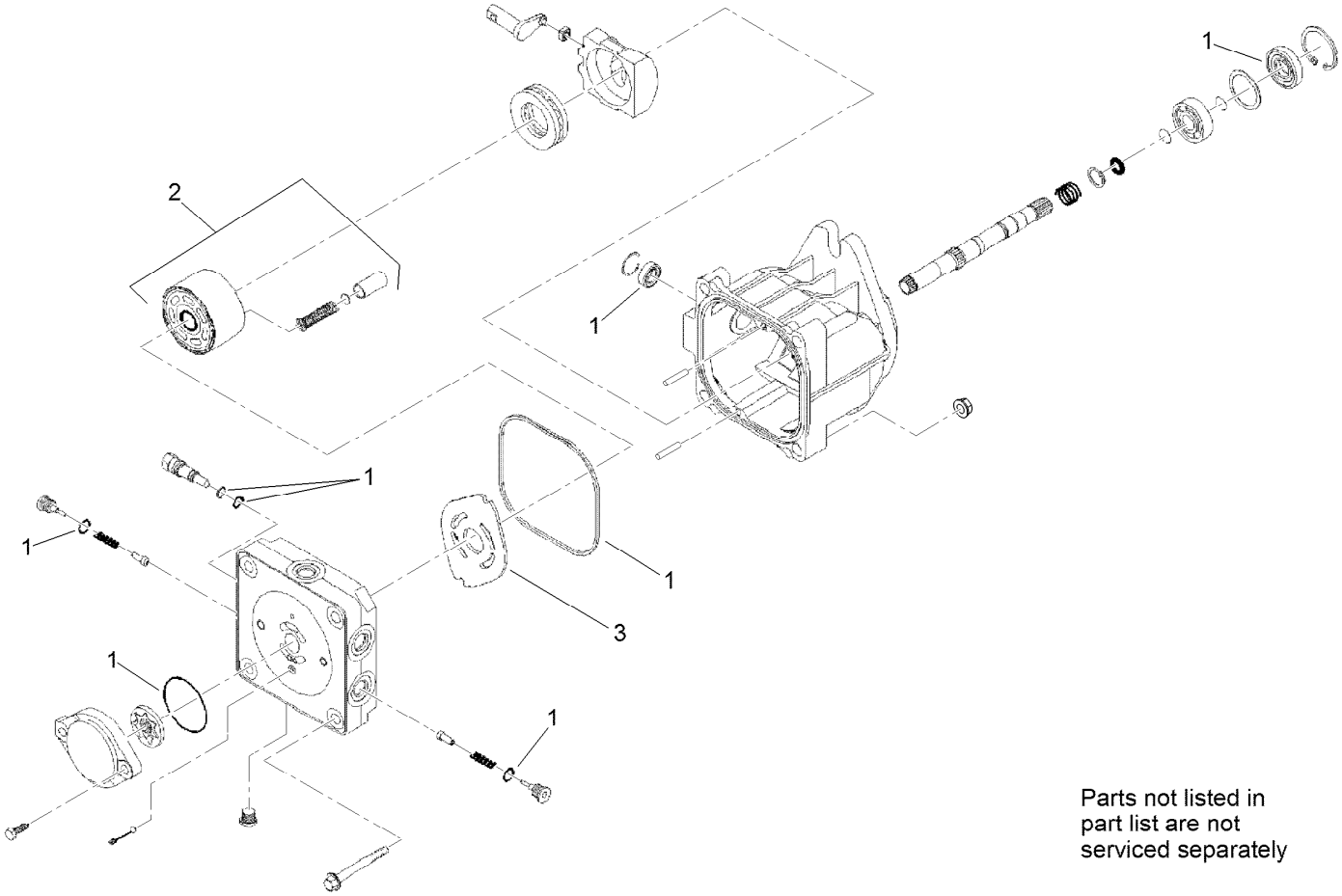

Parts not listed in part list are not serviced separately

Hydraulic Pump Assembly No. 106-9590 and 106-9591

Ref.	*Part Number*	*Qty.*	*Description*
1	100-6110	1	Overhaul Seal Kit
2	94-1913	1	Cylinder Block ASM
3	100-6112	1	Plate-Valve

Principal Hydraulic Assembly

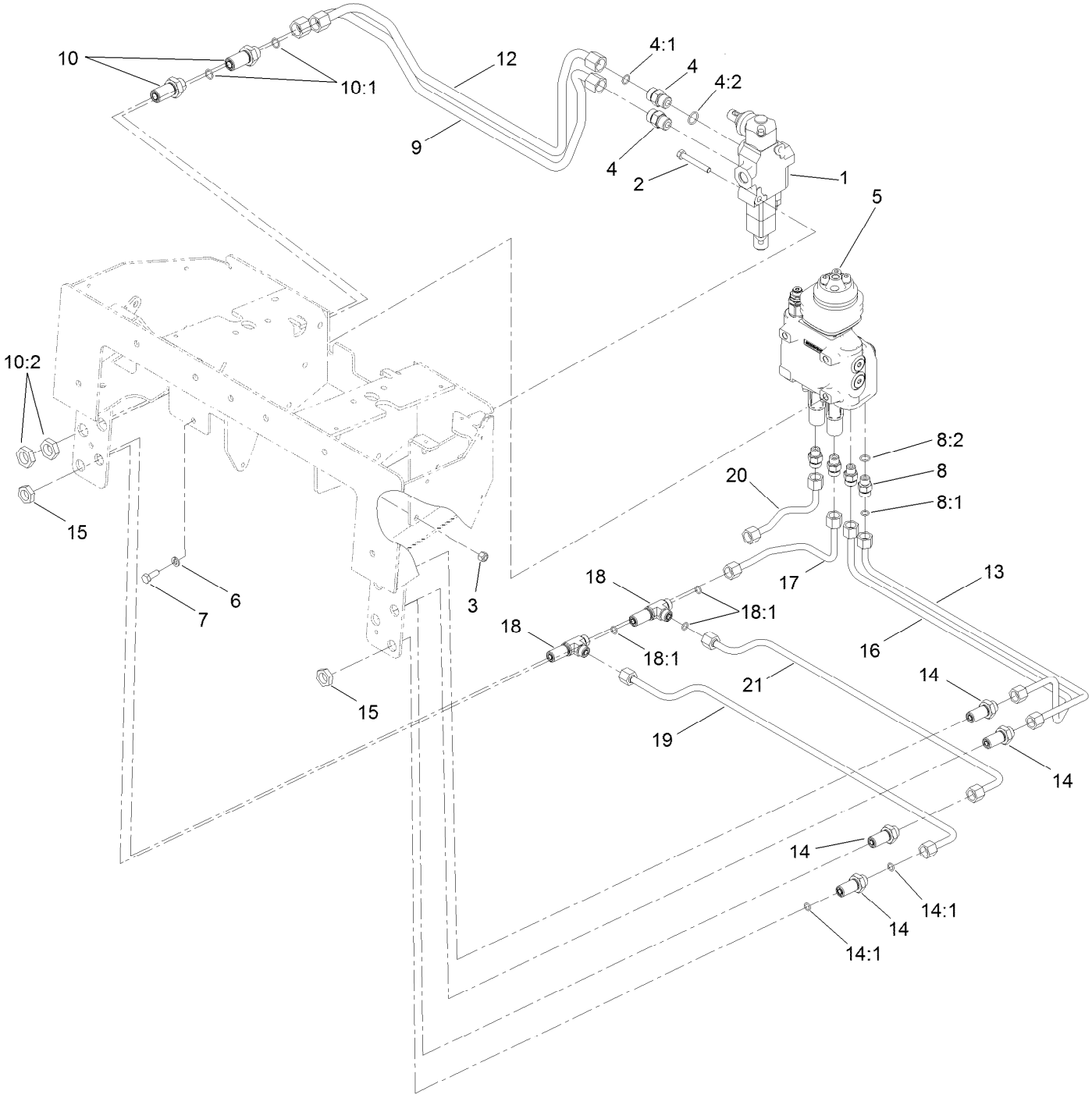

Principal Hydraulic Assembly (continued)

Ref.	Part Number	Qty.	Description
1	104-2831	1	1 Spool Valve ASM
2	322-11	2	Screw-HH
3	3296-29	2	Nut-Lock, NI
4	340-4	2	Fitting-STR
4:1	237-30	1	O-Ring
4:2	237-79	1	O-Ring
5	106-9307	1	2 Spool Valve ASM
6	3253-4	3	Washer-Lock
7	322-4	3	Screw-HH
8	340-2	4	Fitting-Straight
8:1	237-22	1	O-Ring
8:2	237-42	1	O-Ring
9	106-9310	1	Tube-HYD
10	340-161	2	Fitting-Bulkhead

Ref.	Part Number	Qty.	Description
10:1	237-30	2	O-Ring
10:2	340-127	1	Nut-Bulkhead
12	106-9311	1	Tube-HYD
13	106-9314	1	Tube-HYD
14	340-71	4	Fitting-Straight, Bulkhead
14:1	237-22	2	O-Ring
15	340-70	6	Nut-Lock
16	106-9312	1	Tube-HYD
17	106-9313	1	Tube-HYD
18	340-68	2	Fitting-Tee, Bulkhead
18:1	237-22	3	O-Ring
19	106-9316	1	Tube-HYD
20	106-9315	1	Tube-HYD
21	106-9317	1	Tube-HYD

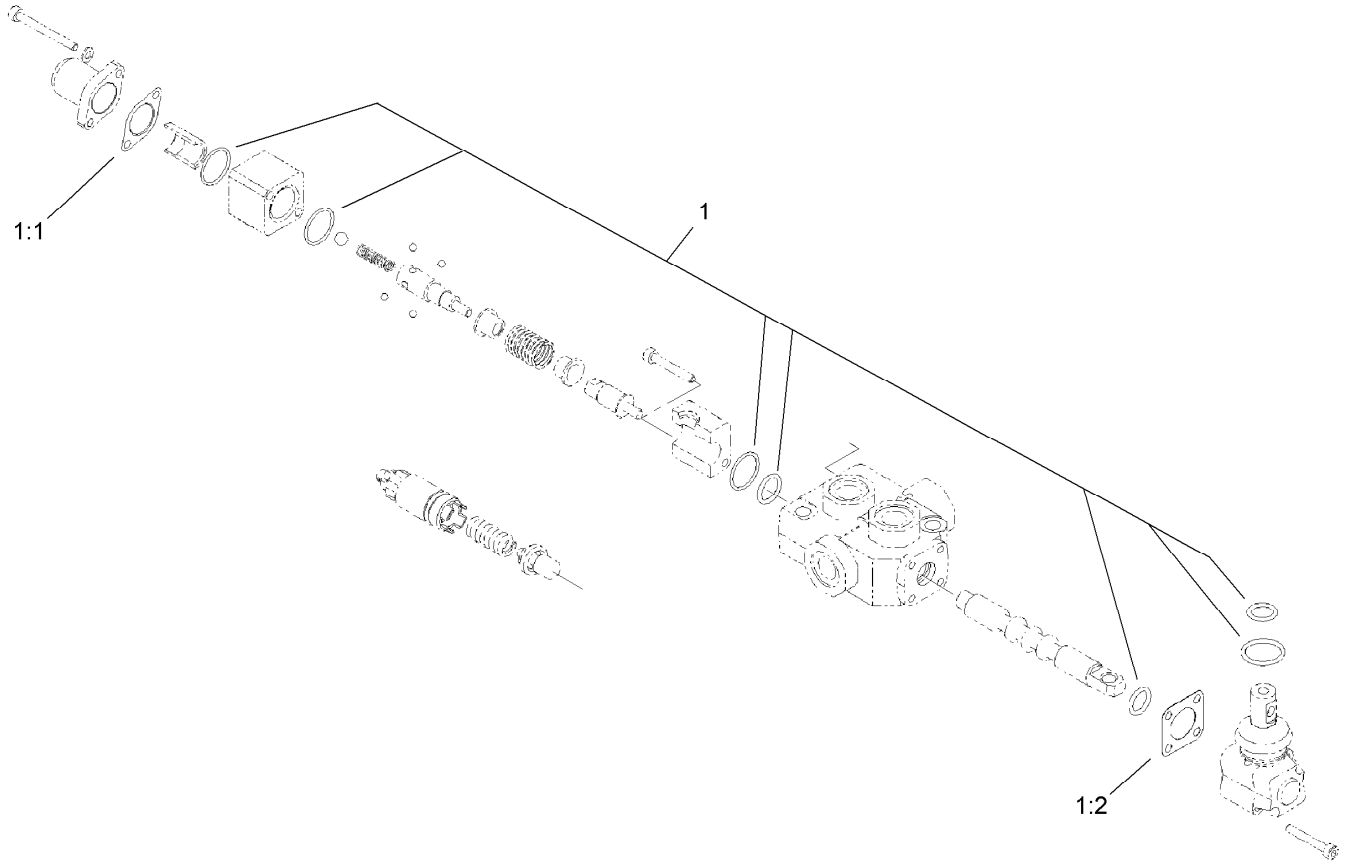

One Spool Valve Assembly No. 104-2831

Ref.	*Part Number*	*Qty.*	*Description*
1	99-4390	1	Seal Kit
1:1	99-3074	4	Gasket
1:2	99-3075	8	Gasket

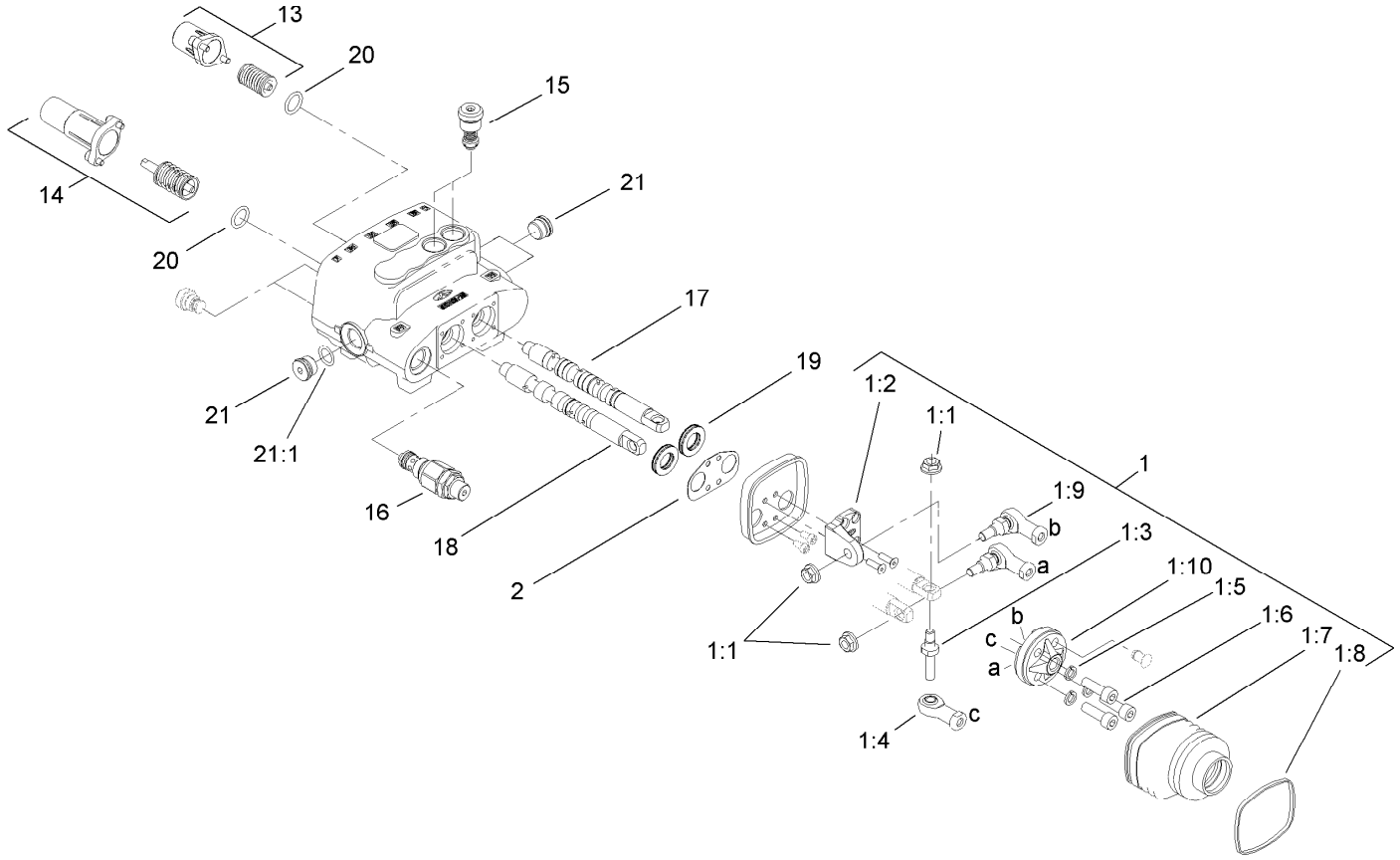

Two Spool Valve Assembly No. 106-9307

Ref.	Part Number	Qty.	Description
1	106-7724	1	Joystick Kit
1:1	98-0668	3	Nut
1:2	106-7726	1	Pivot-Joystick
1:3	106-7727	1	Pin-Joystick
1:4	106-7728	1	End-Rod
1:5	42-9850	3	Washer-Lock, Spring
1:6	98-5828	3	Screw-HSH
1:7	106-7729	1	Bellow-Rubber
1:8	3290-379	1	Tie-Cable
1:9	106-7730	2	Joint-Joystick
1:10	106-7731	1	Holder-Articulated
2	106-7725	1	Seal-Joystick
13	106-7732	1	Valve Spring Kit
14	106-7733	1	Detent Spring Kit
15	106-7734	2	Valve-Relief
16	106-7735	1	Valve-Relief, Main
17	106-7736	1	Spool-Valve
18	106-7737	1	Spool-Valve
19	106-7738	2	Seal-Valve, Spool
20	106-7719	2	Seal-Valve
21	353-988	3	Plug-Hex
21:1	237-79	1	O-Ring

Auxiliary Hydraulic Assembly

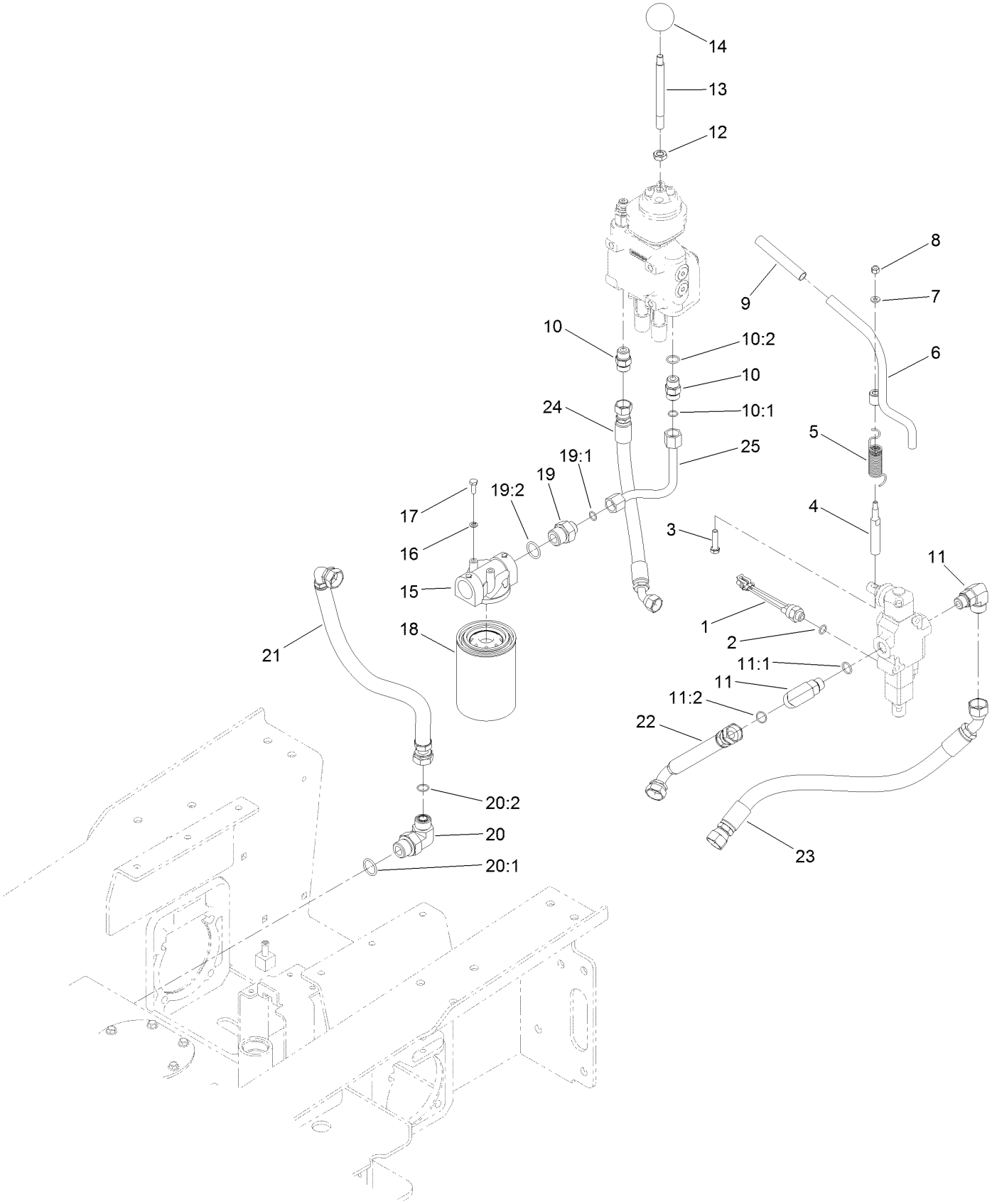

Auxiliary Hydraulic Assembly (continued)

Ref.	Part Number	Qty.	Description
1	72-4310	1	Switch-Ball
2	237-42	1	O-Ring
3	33114-035	1	Screw-HH
4	104-2827	1	Spacer-Hiflo
5	112-2738	1	Spring-Torsion
6	112-2739	1	Lever-Auxiliary
7	3256-16	1	Washer-Flat
8	3296-42	1	Nut-Lock, NI
9	112-2605	1	Grip-Rubber
10	340-4	2	Fitting-STR
10:1	237-30	1	O-Ring
10:2	237-79	1	O-Ring
11	340-153	2	Fitting-Elbow, 90 DEG
11:1	237-79	1	O-Ring
11:2	237-151	1	O-Ring
12	51-2070	1	Nut
13	108-4675	1	Shaft-Handle, Loader

Ref.	Part Number	Qty.	Description
14	233-21	1	Knob
15	92-5821	1	Head-Filter
16	3253-3	2	Washer-Lock
17	321-4	2	Screw-HH
18	86-3010	2	Filter-Oil
19	100-4240	1	Fitting-STR
19:1	237-30	1	O-Ring
19:2	237-81	1	O-Ring
20	340-139	1	Fitting-Elbow 90
20:1	237-81	1	O-Ring
20:2	237-65	1	O-Ring
21	112-2442	1	Hose-HYD
22	112-2443	1	Hose-HYD
23	112-2561	1	Hose-HYD
24	112-2560	1	Hose-HYD
25	106-9385	1	Tube-HYD

Drive Assembly

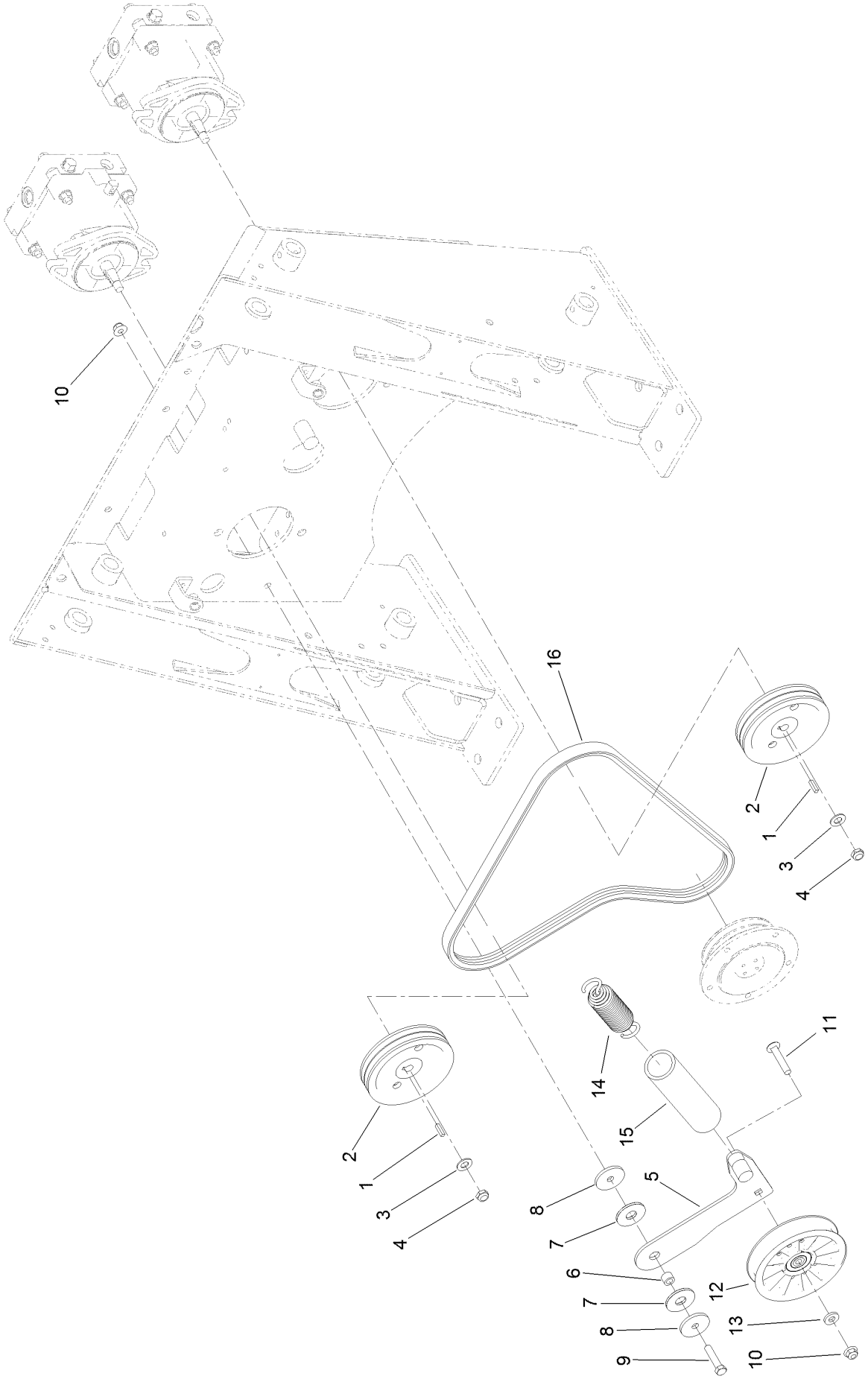

Drive Assembly (continued)

Ref.	Part Number	Qty.	Description
1	3-6168	2	Key
2	106-5710	2	Pulley-3V
3	3256-25	2	Washer-Flat
4	3296-38	2	Nut-Lock, NI
5	117-9968	1	Idler Arm ASM
6	115-4986	1	Spacer
7	114-0463	2	Washer-Friction, Composite
8	115-1485	2	Washer-Plain
9	323-9	1	Screw-HH
10	104-8301	2	Nut-HF, NI
11	117-9971	1	Bolt-Carriage
12	119-2358	1	Pulley-Idler
13	43-0940	1	Spacer
14	105-0383	1	Spring-Extension
15	112-2409	1	Retainer-Spring
16	108-6262	1	V-Belt

Electrical Assembly

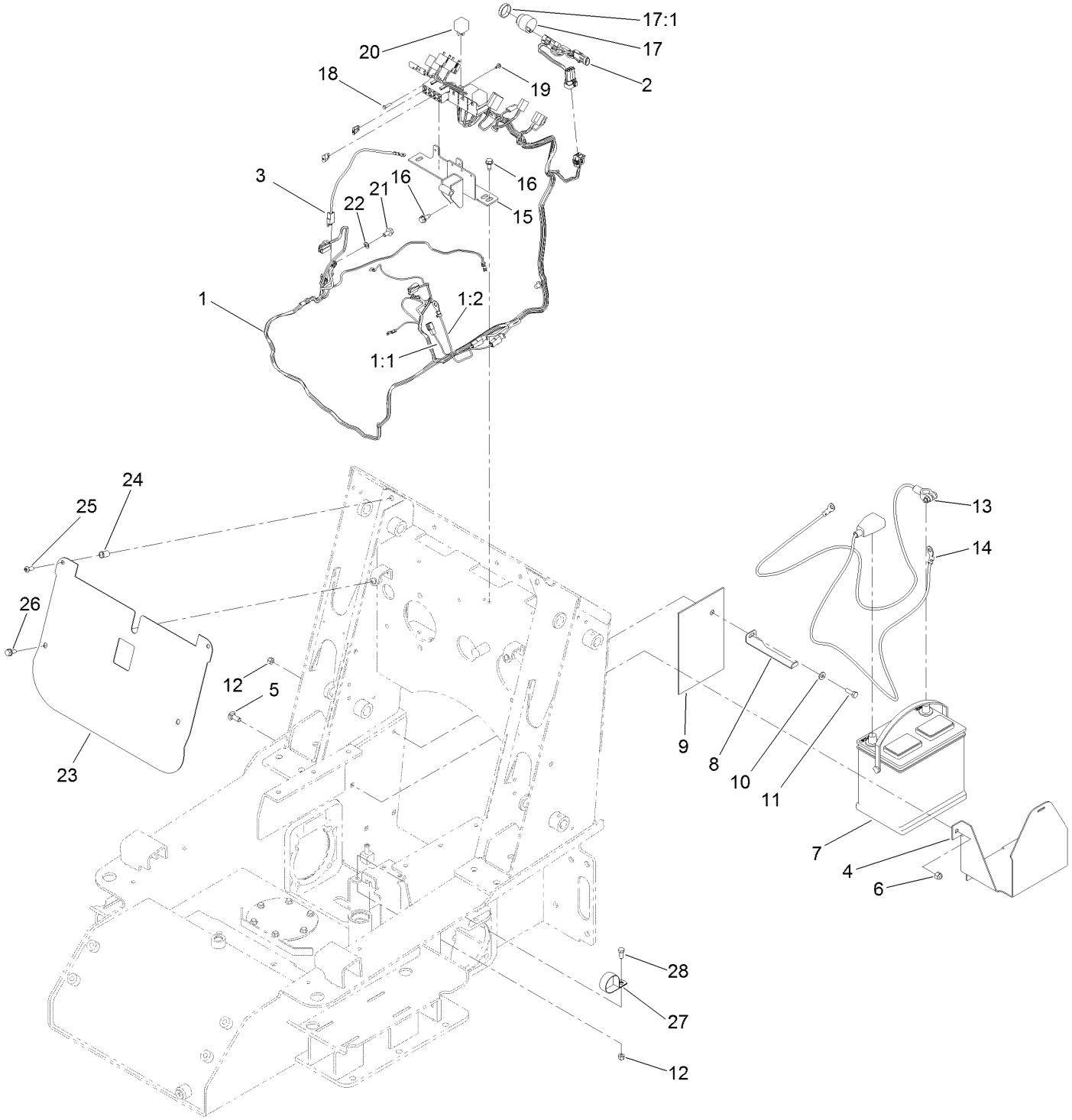

Electrical Assembly (continued)

Ref.	Part Number	Qty.	Description
1	117-1329	1	Harness-Wire
1:1	112-2463	1	Harness-Link, Fusible
1:2	108-6346	1	Harness-Link, Fusible (14FI)
2	115-0730	1	Harness-Wire, Neutral
3	108-6365	1	Harness-Wire
4	108-6274-03	1	Mount-Battery
5	3231-2	3	Bolt-CARR
6	3296-39	3	Nut-Lock, NI
7	104-9979	1	Battery
8	108-6275	1	Clamp-Battery
9	108-6392	1	Guard-Battery
10	3256-2	1	Washer-Flat
11	322-5	1	Screw-HH
12	3296-29	2	Nut-Lock, NI
13	108-6328	1	Cable-Battery, Negative
14	108-6327	1	Cable-Battery, Positive

Ref.	Part Number	Qty.	Description
15	108-6360-03	1	Bracket-Relay
16	32144-11	3	Screw-HWHTF
17	80-9330	1	Audio Alarm ASM
17:1	104-5107	1	Nut-Plastic, Knurled
18	32104-4	2	Screw
19	104-2065	3	Screw-HWH
20	98-7249	3	Relay
21	33104-016	1	Screw-HHF
22	3255-8	1	Washer-Lock
23	108-6225	1	Baffle-Electrical
24	32148-8	2	Insert-Threaded
25	3274-55	2	Screw-HSBH
26	3234-5	2	Screw-HHF
27	2412-147	1	Clamp-R
28	322-3	1	Screw-HH

Fuel Gauge, Hour Meter and Ignition Assembly

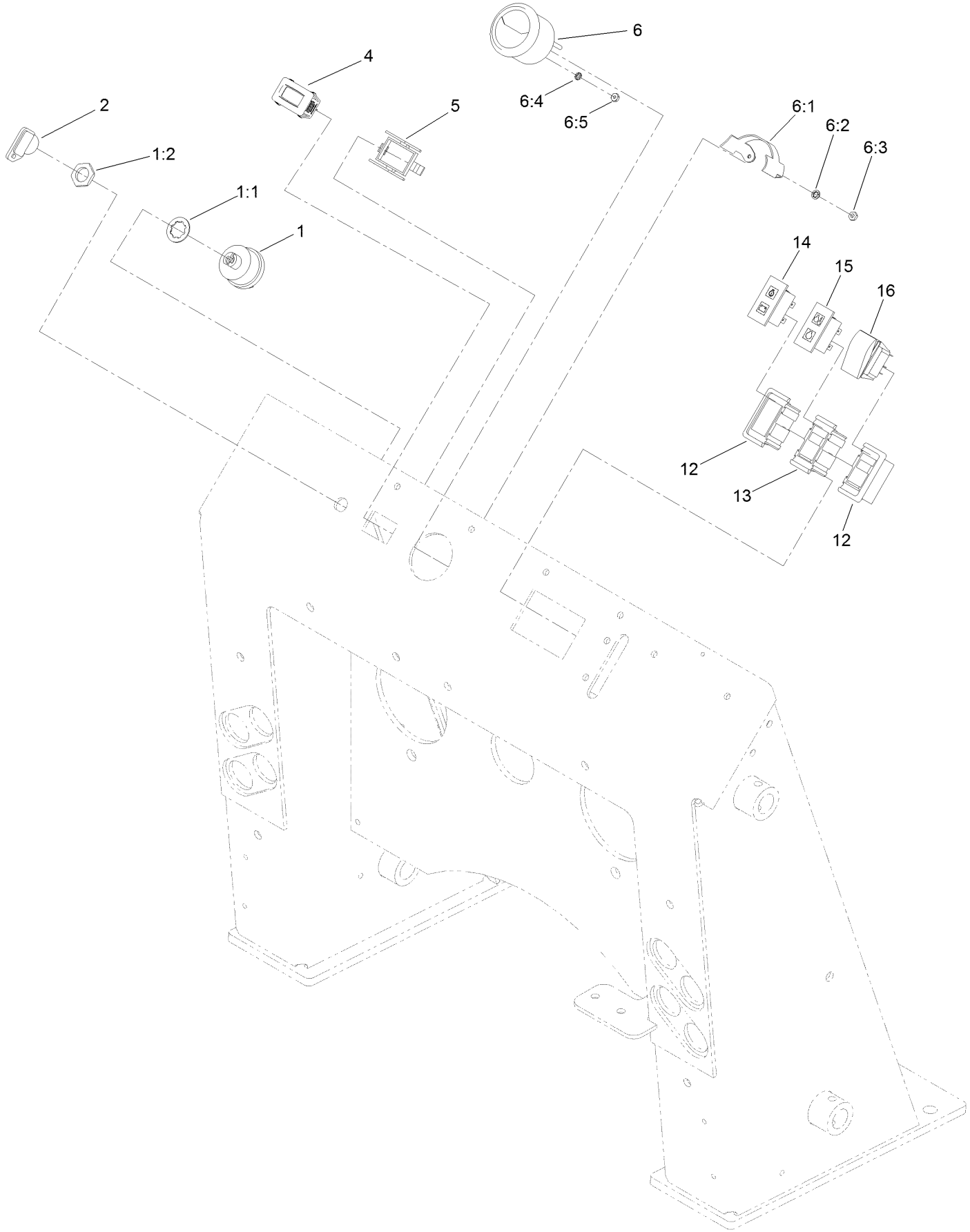

Fuel Gauge, Hour Meter and Ignition Assembly (continued)

Ref.	Part Number	Qty.	Description
1	88-9830	1	Key Switch ASM
1:1	3254-5	1	Washer-Tooth, Internal
1:2	218-461	1	Nut-HH
2	63-8360	2	Key-Ignition
4	120-2244	1	Hourmeter
5	104-4234	1	Clip-Mounting
6	66-2940	1	Gauge-Fuel
6:1	100-6147	1	Bracket-Mounting, Gauge
6:2	3254-1	2	Washer-Lock, Int
6:3	3217-27	2	Nut-Hex
6:4	3255-24	3	Washer-Lock / EXT
6:5	3217-16	3	Nut-Hex
12	108-6325	2	Bracket-End
13	108-6326	1	Bracket-Middle
14	100-8070	1	Lamp-Warning
15	100-8071	1	Lamp-Warning
16	110-0811	1	Switch-Rocker

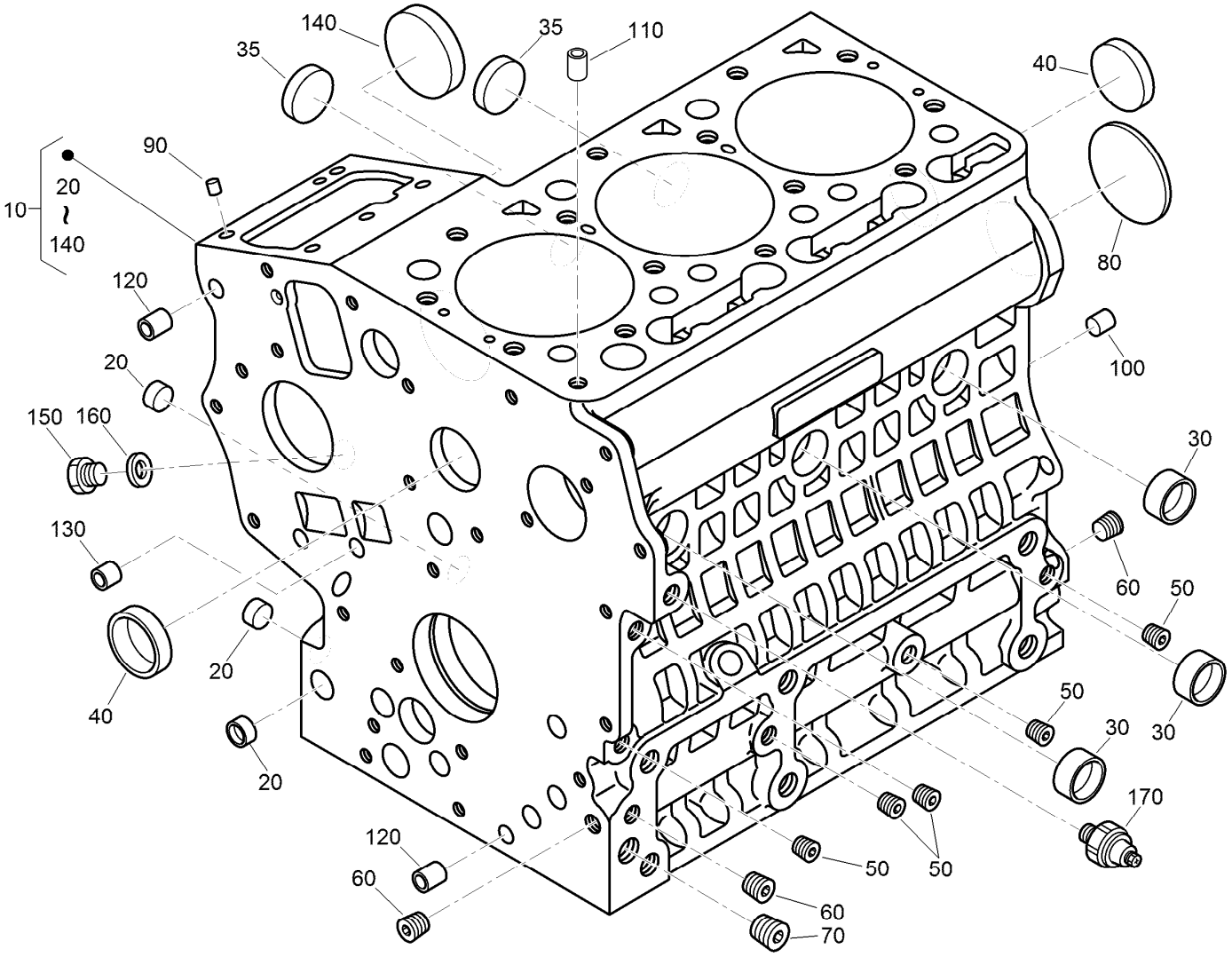

Crankcase Assembly

Ref.	Part Number	Qty.	Description
10	120-3120	1	Crankcase ASM
20	100-2019	3	Cap-Sealing
30	100-2020	3	Cap-Sealing
35	110-3702	2	Cap-Sealing
40	98-9398	2	Cap-Sealing
50	98-9687	5	Plug
60	98-7487	3	Plug
70	98-7488	1	Plug
80	100-1851	1	Plug-Expansion

Ref.	Part Number	Qty.	Description
90	98-9375	2	Pin-Straight
100	98-9377	2	Pin-Straight
110	98-7506	1	Pin-Pipe
120	100-2051	2	Pin-Pipe
130	100-2051	2	Pin-Pipe
140	100-1991	1	Cover-Fuel, Camshaft
150	99-3447	1	Plug
160	112-8325	1	Washer
170	98-7764	1	Switch-Oil

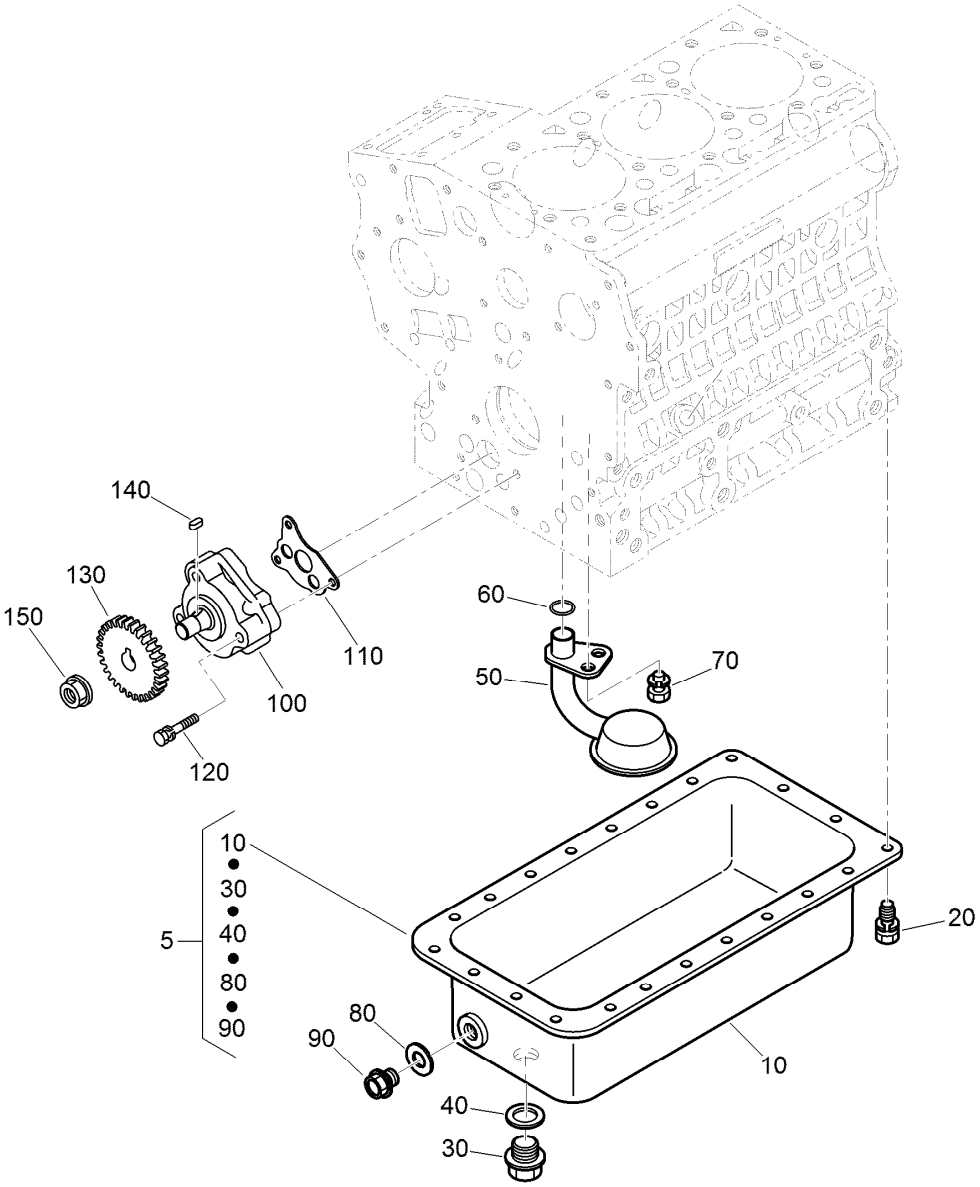

Oil Pan and Oil Pump Assembly

Ref.	Part Number	Qty.	Description
5	112-8327	1	Oil Pan Kit
10	112-2523	1	Pan-Oil
20	98-9350	22	Bolt
30	114-8151	1	Plug-Drain
40	110-9715	1	Gasket-Pan, Oil
50	100-2001	1	Strainer-Pickup, Oil
60	105-3776	1	O-Ring
70	100-9195	1	Bolt

Ref.	Part Number	Qty.	Description
80	98-7524	1	Gasket
90	98-9686	1	Plug-Drain
100	100-2002	1	Oil Pump ASM
110	100-2003	1	Gasket-Pump, Oil
120	100-1923	3	Bolt
130	130-1419	1	Gear-Drive, Oil Pump
140	98-7658	1	Key-Feather
150	100-1779	1	Nut-Flange

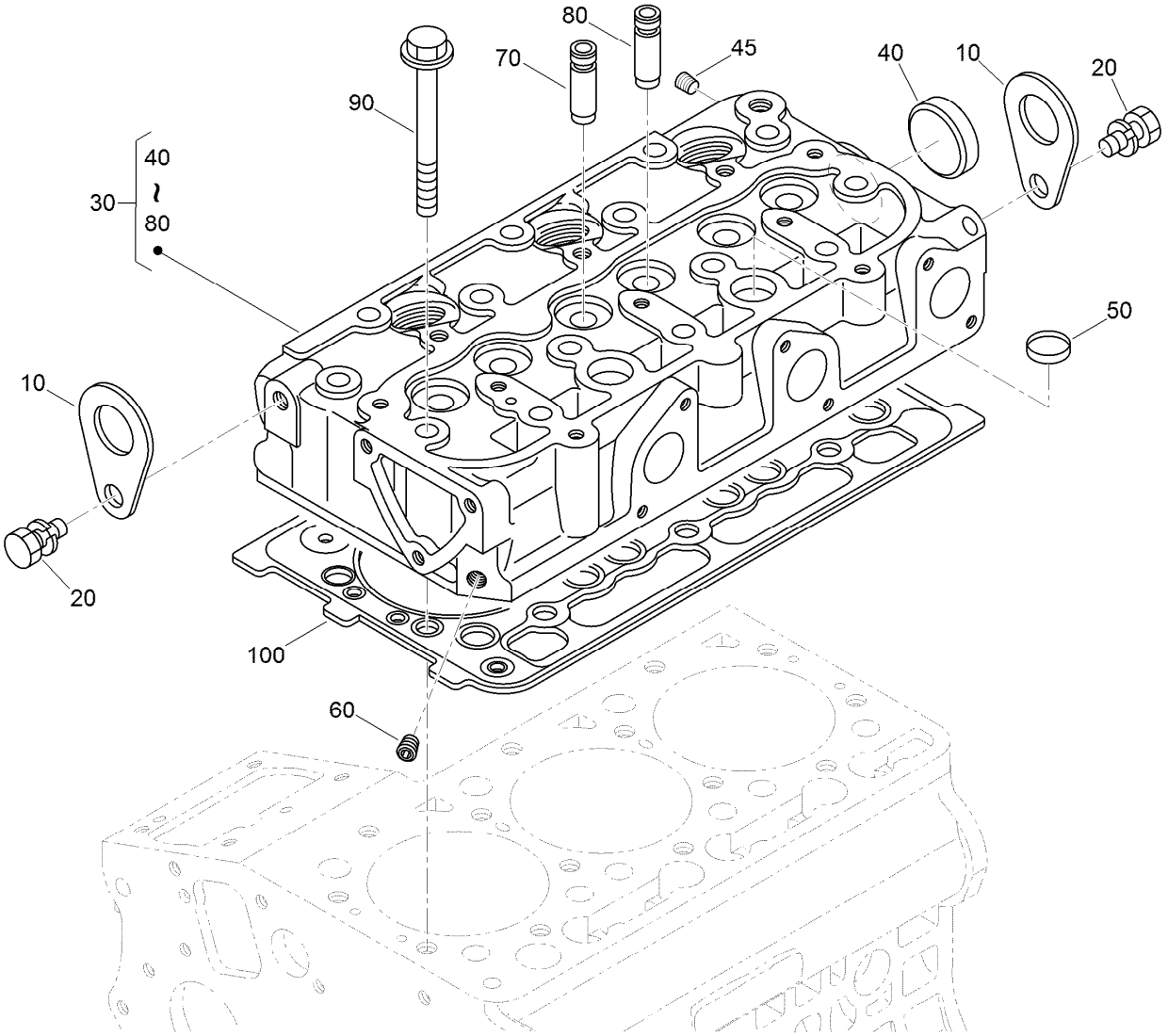

Cylinder Head Assembly

Ref.	Part Number	Qty.	Description
10	98-7531	2	Hook-Engine
20	98-7526	2	Bolt
30	130-1533	1	Cylinder Head ASM
40	105-3705	1	Cap-Sealing
45	98-9444	1	Plug
50	98-9389	2	Cap-Sealing
60	98-9687	1	Plug
70	100-1882	3	Guide-Valve, Inlet
80	100-1883	3	Guide-Valve, Exhaust
90	100-1820	14	Bolt-Head, Cylinder
100	112-2520	1	Gasket-Head, Cylinder

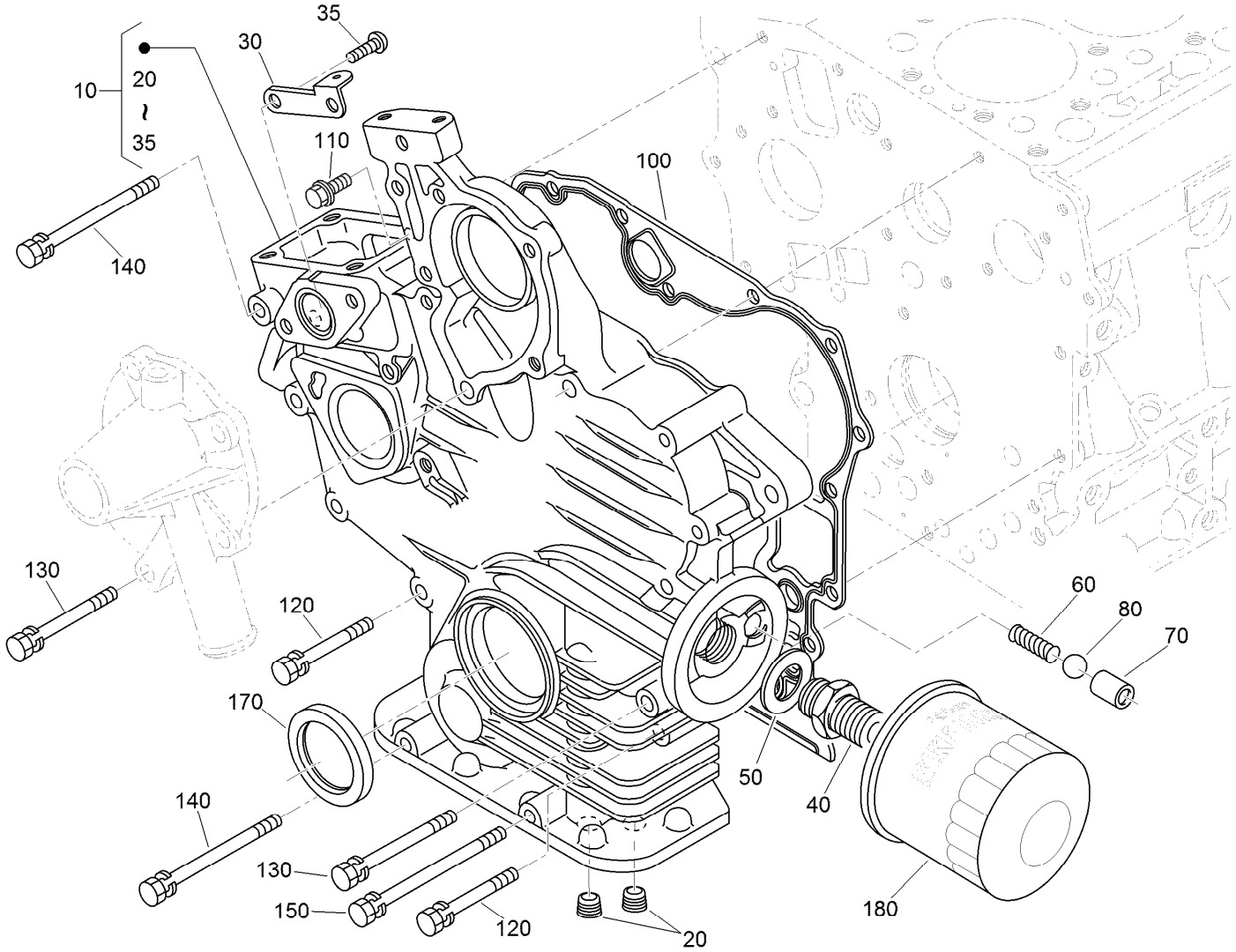

Gear Case and Oil Filter Cartridge Assembly

Ref.	Part Number	Qty.	Description
10	117-1702	1	Gear Case ASM
20	98-7488	2	Plug
30	110-3708	1	Stay-Spring, Start
35	100-2040	2	Screw
40	98-9388	1	Joint-Pipe
50	100-1926	1	Washer-Plain
60	100-2004	1	Spring
70	100-1894	1	Seat-Valve
80	100-1792	1	Ball

Ref.	Part Number	Qty.	Description
100	117-0327	1	Gasket-Case, Gear
110	127-0403	1	Bolt-Flange
120	125-9063	9	Bolt-Sems
130	100-1922	2	Bolt
140	98-9357	2	Bolt
150	110-3710	1	Bolt
170	120-7852	1	Seal-Oil
180	115-8189	1	Filter-Oil, Engine

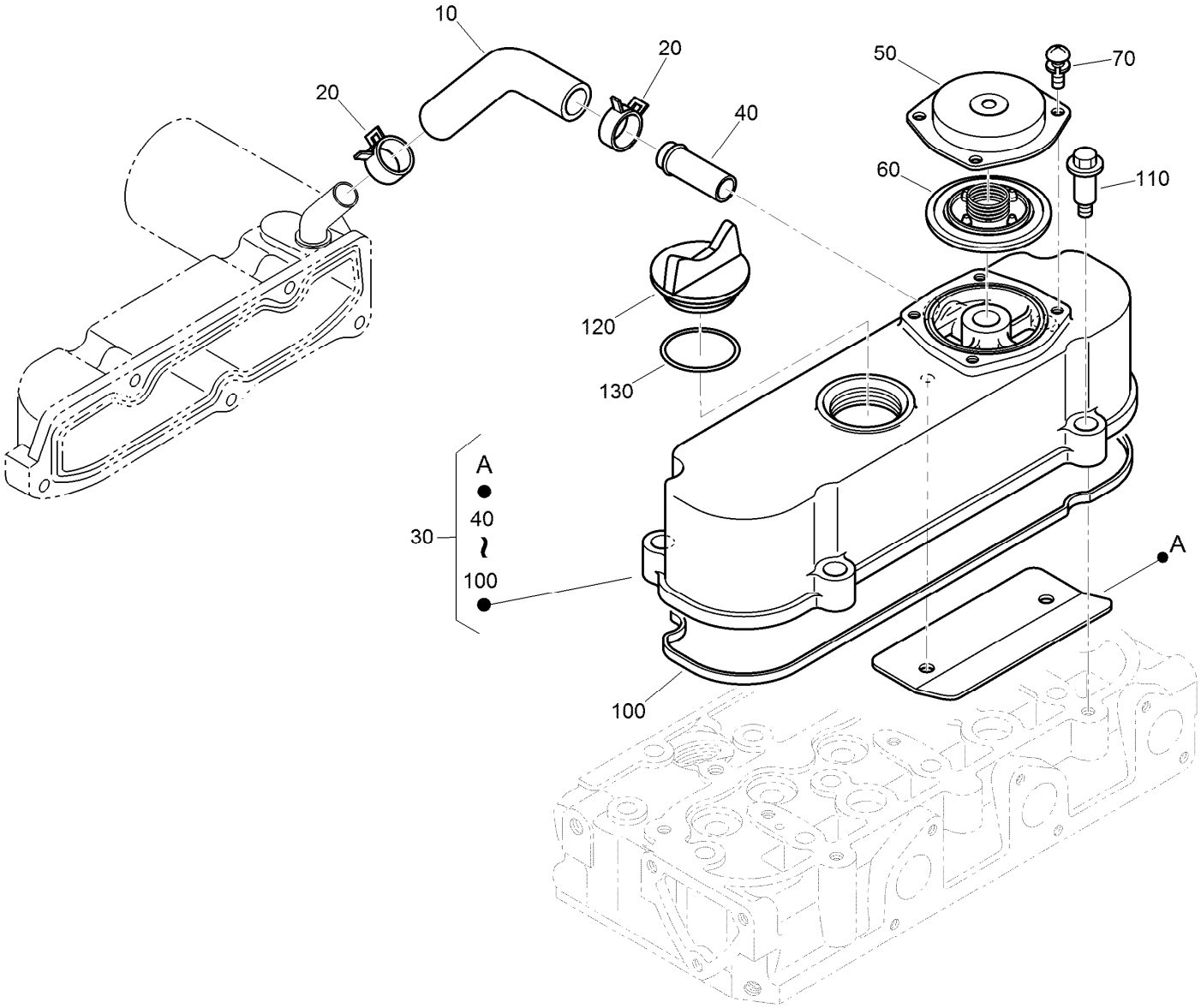

Cylinder Head Cover Assembly

Ref.	Part Number	Qty.	Description
10	120-3139	1	Tube-Breather
20	110-3712	2	Clamp-Hose
30	112-8332	1	Cylinder Head Cover ASM
40	98-9580	1	Pipe-Return, Water
50	110-3714	1	Cover-Breather
60	110-3715	1	Valve-Breather
70	98-9364	4	Screw (With Washer)
100	112-2521	1	Gasket-Cover, Head
110	108-7063	4	Bolt
120	107-9075	1	Plug-Filler, Oil
130	99-3446	1	O-Ring

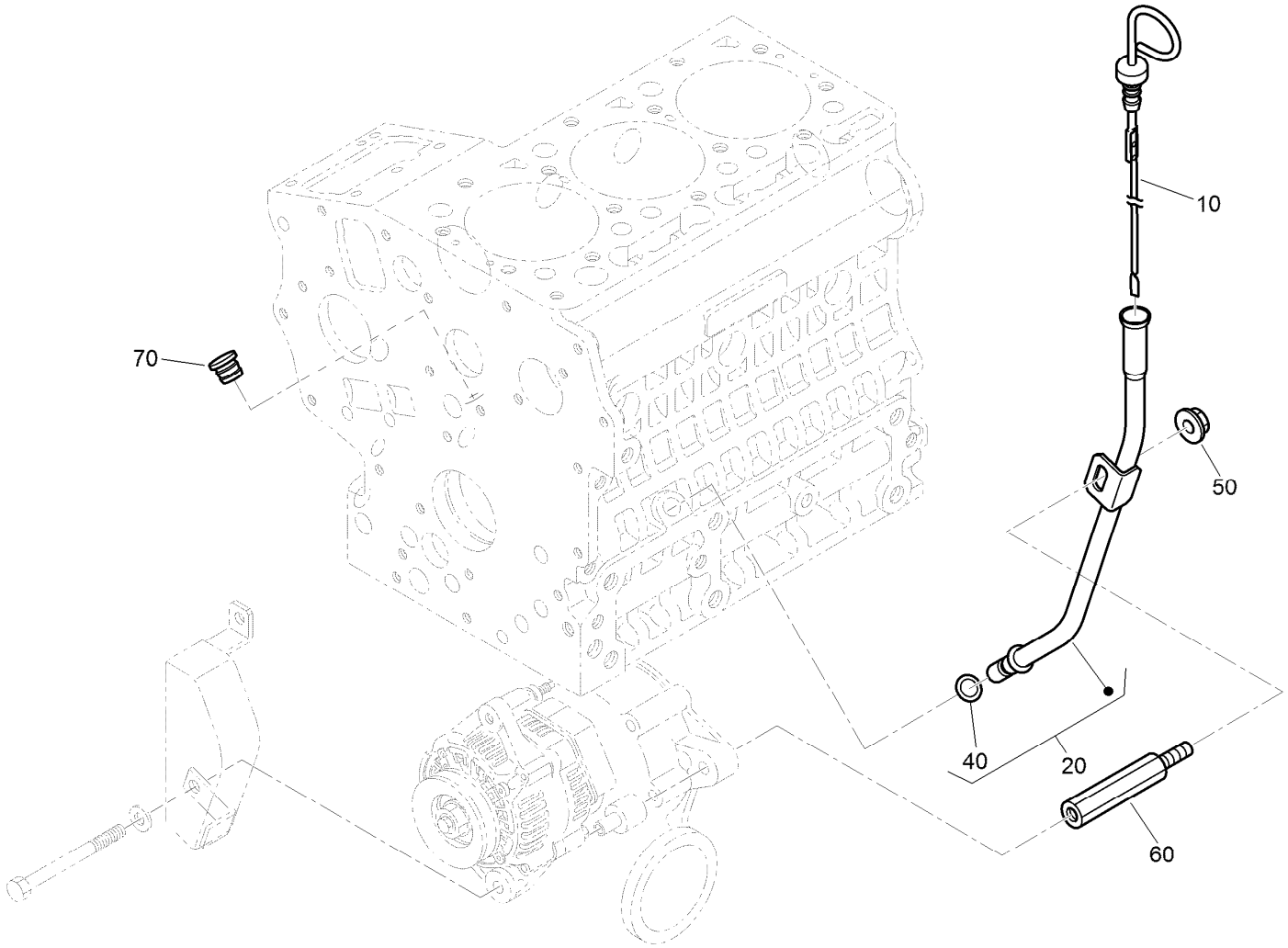

Dipstick and Guide Assembly

Ref.	*Part Number*	*Qty.*	*Description*
10	112-2489	1	Gauge-Oil
20	112-2490	1	Oil Gauge Guide ASM
40	98-9722	1	O-Ring
50	112-2492	1	Nut-Flange
60	112-2493	1	Support-Guide, Gauge
70	110-3720	2	Plug-Gauge, Oil

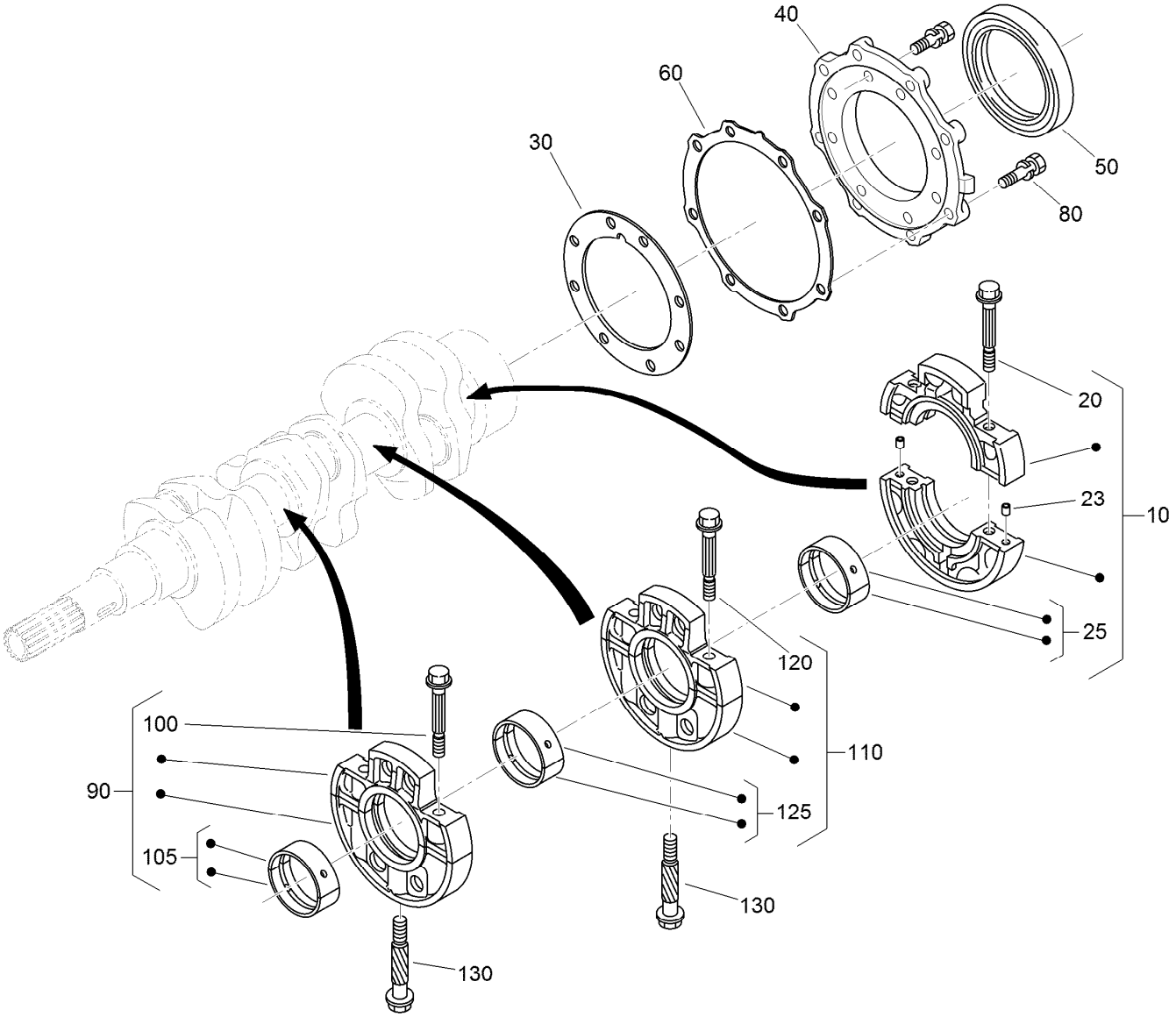

Main Bearing Case Assembly

Ref.	Part Number	Qty.	Description
10	125-9064	1	Wheel Bearing Case ASM
20	125-9065	2	Bolt-Flange
23	125-9082	2	Pin-Straight
25	125-9066	1	Crankshaft Metal ASM (STD)
25	125-9067	1	Crankshaft Metal ASM (-0.20Mm)
25	125-9068	1	Crankshaft Metal ASM (-0.40Mm)
30	117-0304	1	Gasket-Case, Bearing
40	112-8334	1	Cover-Case, Bearing
50	110-3724	1	Seal-Oil
60	100-1876	1	Gasket-Cover, Case
80	100-1750	16	Bolt
90	110-3725	1	Main Bearing Case ASM
100	110-3723	2	Bolt-Case, Bearing

Ref.	Part Number	Qty.	Description
105	110-3741	1	Crankshaft Metal ASM (STD)
105	125-9083	1	Crankshaft Metal ASM (-0.20Mm)
105	110-3743	1	Crankshaft Metal ASM (-0.40Mm)
110	125-9069	1	Main Case Bearing ASM
120	110-3723	2	Bolt-Case, Bearing
125	110-3741	1	Crankshaft Metal ASM (STD)
125	125-9083	1	Crankshaft Metal ASM (-0.20Mm)
125	110-3743	1	Crankshaft Metal ASM (-0.40Mm)
130	100-1874	2	Bolt-Case, Bearing

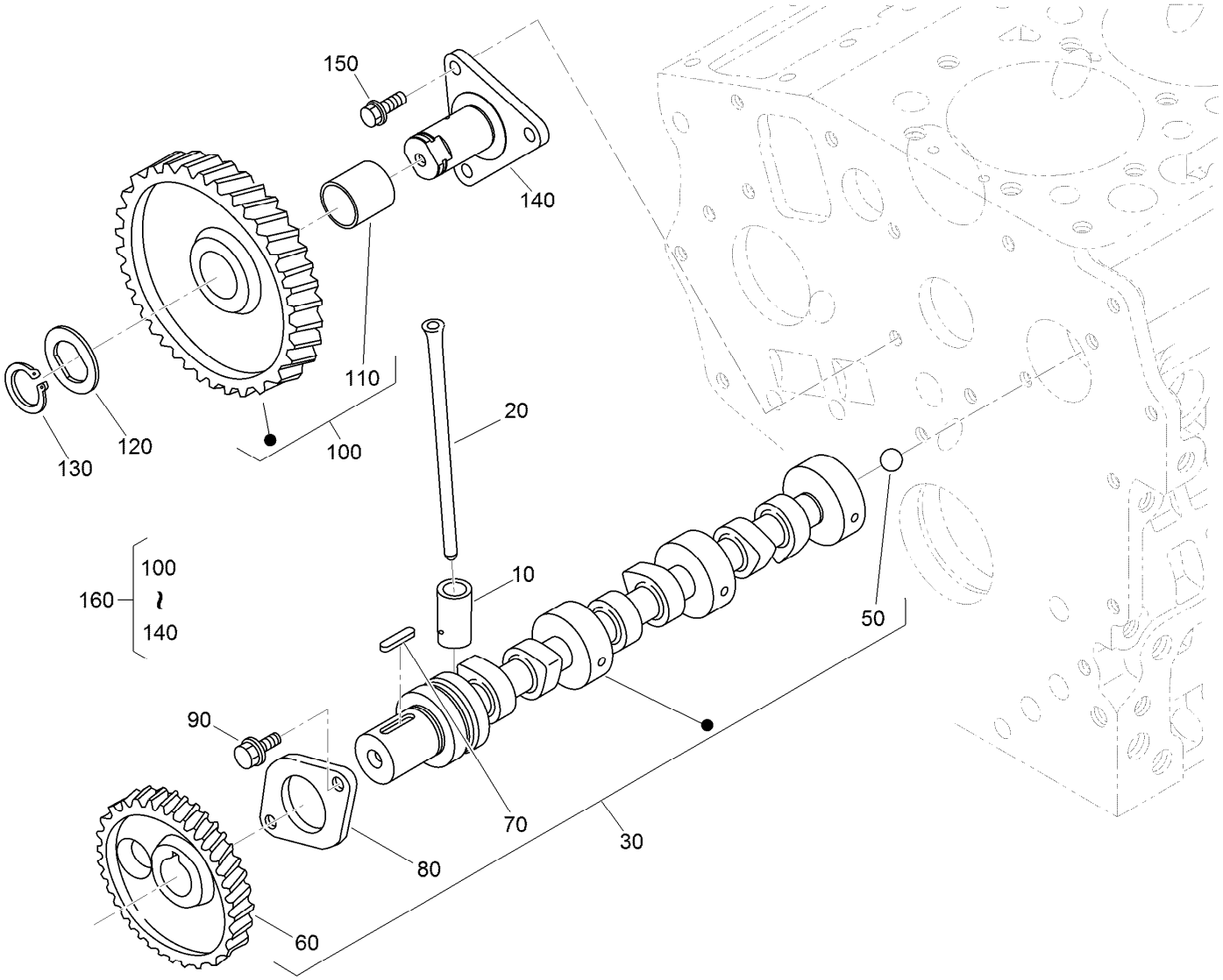

Camshaft and Idle Gear Shaft Assembly

Ref.	Part Number	Qty.	Description
10	110-3727	6	Tappet
20	100-1989	6	Rod-Push
30	117-0305	1	Camshaft ASM
50	110-3729	1	Ball
60	130-1534	1	Gear-Cam
70	98-9378	1	Key-Feather
80	100-1887	1	Stopper-Camshaft
90	98-9350	2	Bolt
100	121-2421	1	Idle Gear ASM
110	121-2422	1	Bushing
120	100-1970	1	Collar-Gear, Idle
130	100-1969	1	Ring-Snap
140	100-1967	1	Shaft-Gear, Idle
150	100-1774	3	Bolt-Flange
160	100-2240	1	Idle Gear ASM

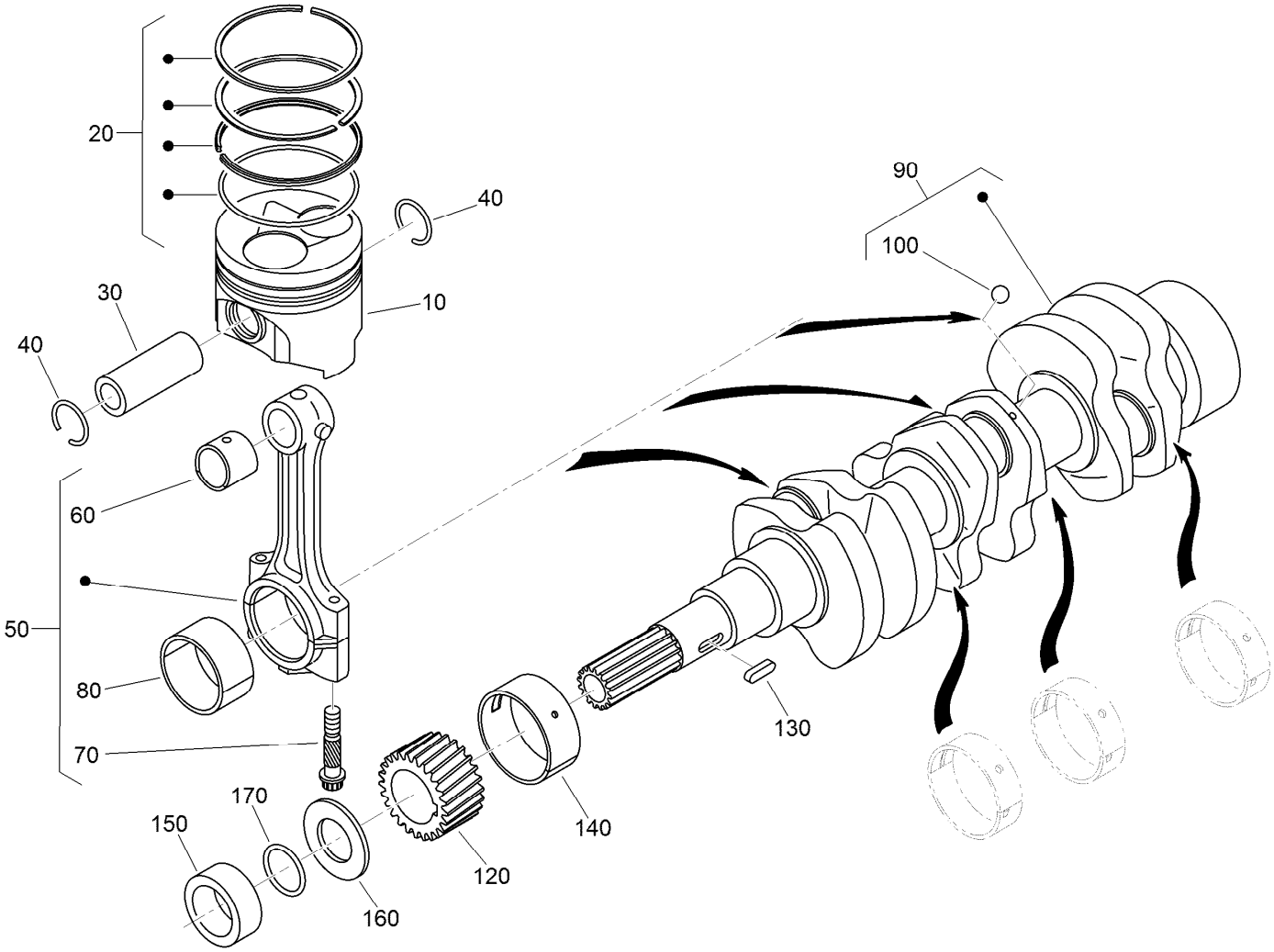

Piston and Crankshaft Assembly

Ref.	Part Number	Qty.	Description
10	130-1537	3	Piston
10	130-1540	3	Piston
20	130-1535	3	Piston Ring ASM
20	130-1536	3	Piston Ring ASM
30	110-3734	3	Pin-Piston
40	100-1835	6	Circlip-Internal
50	125-9070	3	Connecting Rod ASM
60	110-3736	3	Bushing-Pin, Piston
70	100-1999	6	Bolt-Rod, Connecting
80	100-2000	3	Metal-Crankpin (STD)
80	121-3849	3	Metal-Crankpin (-.20Mm)

Ref.	Part Number	Qty.	Description
80	121-2420	3	Metal-Crankpin (-.40Mm)
90	117-0308	1	Crankshaft
100	100-1791	3	Ball
120	100-1891	1	Gear-Crankshaft
130	100-1752	1	Key-Feather
140	110-3738	1	Metal-Crankshaft (STD)
140	121-2424	1	Metal-Crankshaft (-.20Mm)
140	121-2425	1	Metal-Crankshaft (-.40Mm)
150	100-1890	1	Collar-Crankshaft
160	100-1974	1	Slinger-Oil
170	100-2209	1	O-Ring

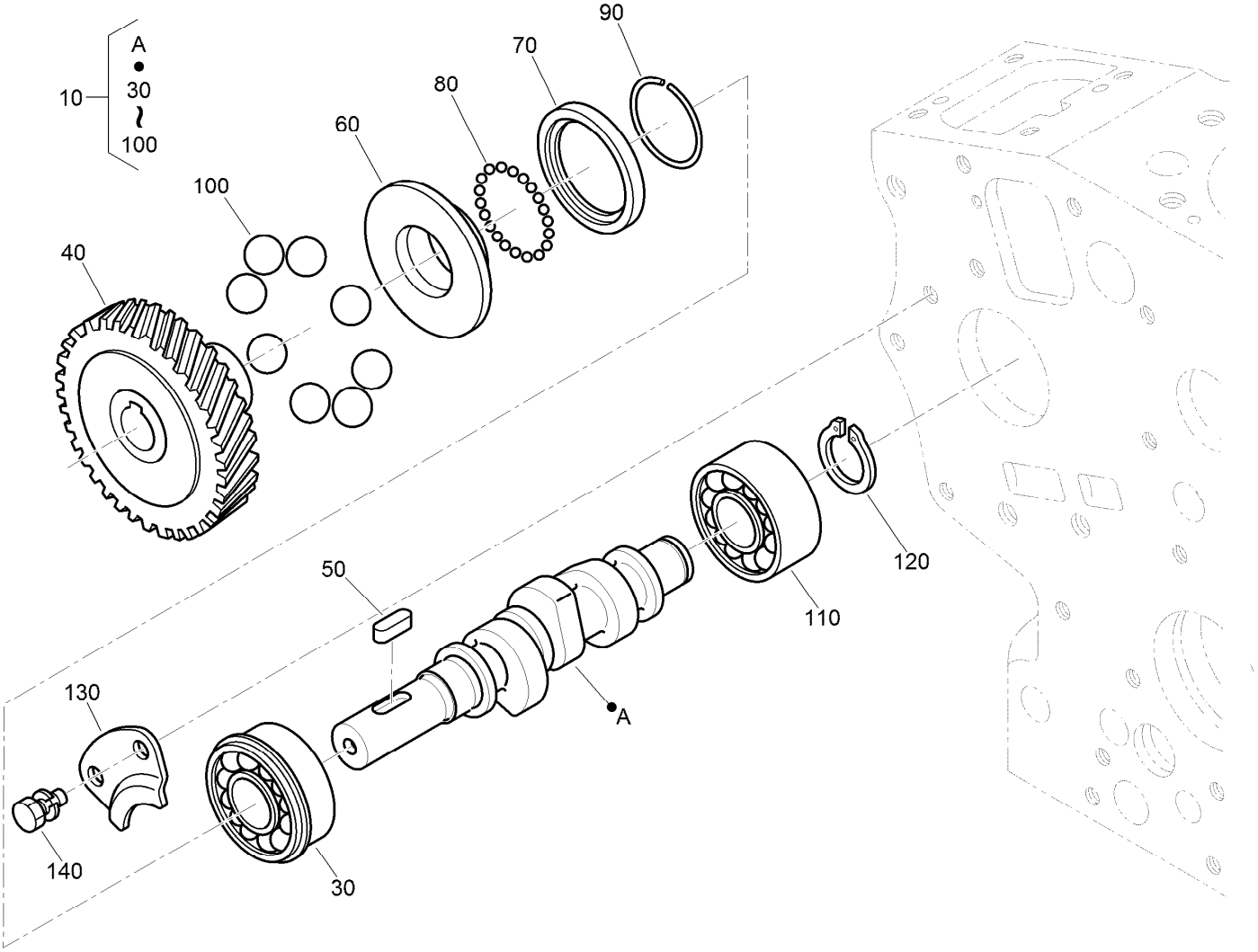

Fuel Camshaft Assembly

Ref.	Part Number	Qty.	Description
10	125-9075	1	Fuel Camshaft ASM
30	100-1795	1	Bearing-Ball
40	100-2006	1	Gear-Pump, Injection
50	100-1752	1	Key-Feather
60	112-8336	1	Sleeve-Governor
70	100-1904	1	Case-Ball, Governor
80	100-1790	32	Ball
90	100-1843	1	Circ-Clip
100	100-1793	8	Ball
110	110-3757	1	Bearing-Ball
120	100-1784	1	Circ-Clip, External
130	100-1888	1	Stopper-Fuel, Camshaft
140	98-9350	2	Bolt

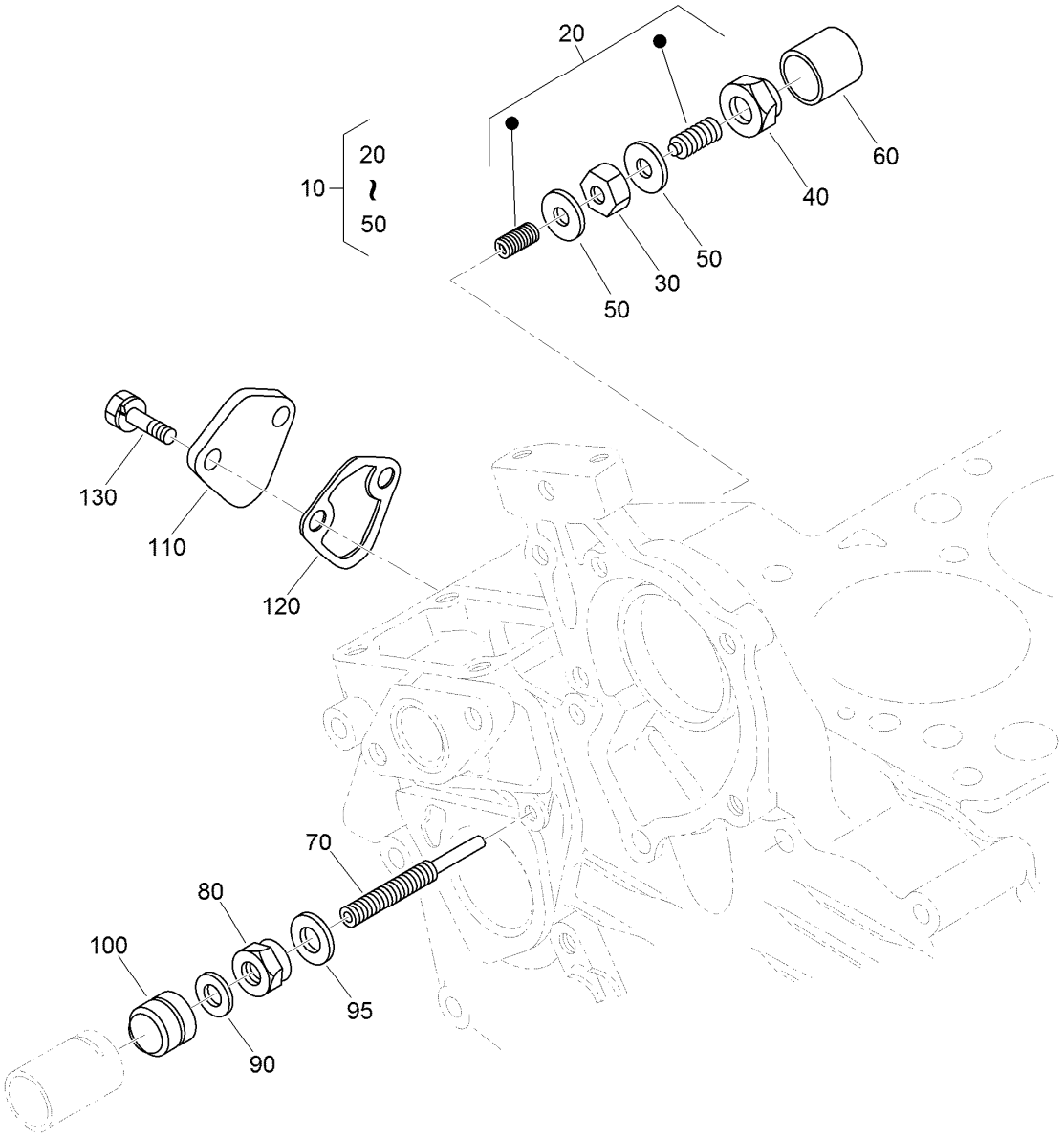

Idle Apparatus and Fuel Pump Cover Assembly

Ref.	*Part Number*	*Qty.*	*Description*
10	100-1898	1	Idle Apparatus ASM
20	100-1899	1	Adjusting Bolt ASM
30	100-1846	1	Nut
40	100-1901	1	Nut-Cap
50	98-7428	2	Gasket
60	100-1902	1	Cap
70	110-3758	1	Bolt-Adjusting
80	100-2175	1	Nut-Lock
90	98-7654	1	Gasket
95	107-9081	1	Gasket
100	99-8387	1	Nut-Cap
110	99-3514	1	Cover
120	98-9636	1	Gasket-Pump, Fuel
130	98-7692	2	Bolt

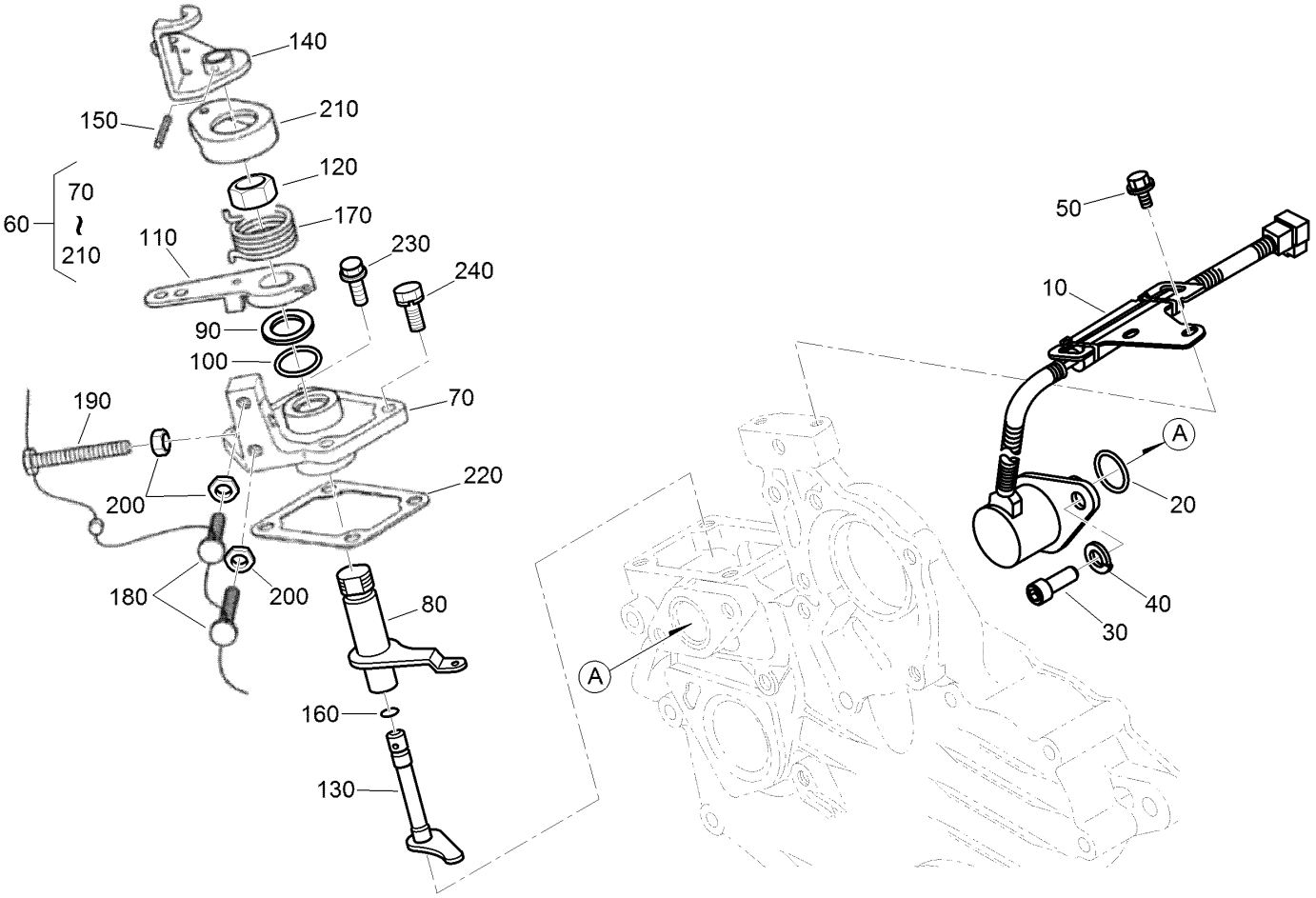

Stop Solenoid and Speed Control Plate Assembly

Ref.	Part Number	Qty.	Description
10	117-2719	1	Solenoid Stop ASM
20	110-3762	1	O-Ring
30	110-3763	2	Bolt-HSH
40	98-7699	2	Washer-Spring
50	100-1774	2	Bolt-Flange
60	110-3769	1	Speed Control Plate ASM
70	110-3770	1	Plate-Control, Speed
80	110-3771	1	Lever-Governor
90	110-3772	1	Collar
100	100-2208	1	O-Ring
110	110-3773	1	Lever-Control, Speed
120	110-3774	1	Nut-Control, Speed

Ref.	Part Number	Qty.	Description
130	110-3775	1	Shaft-Lever
140	110-3776	1	Lever-Stop, Engine
150	110-3777	1	Pin-Spring
160	100-2207	1	O-Ring
170	110-3778	1	Spring-Return
180	120-3133	2	Screw-Stopper
190	120-3134	1	Bolt
200	98-7572	3	Nut
210	110-3779	1	Cap
220	100-1962	1	Gasket-Plate, Control
230	127-0403	2	Bolt-Flange
240	112-2507	2	Bolt

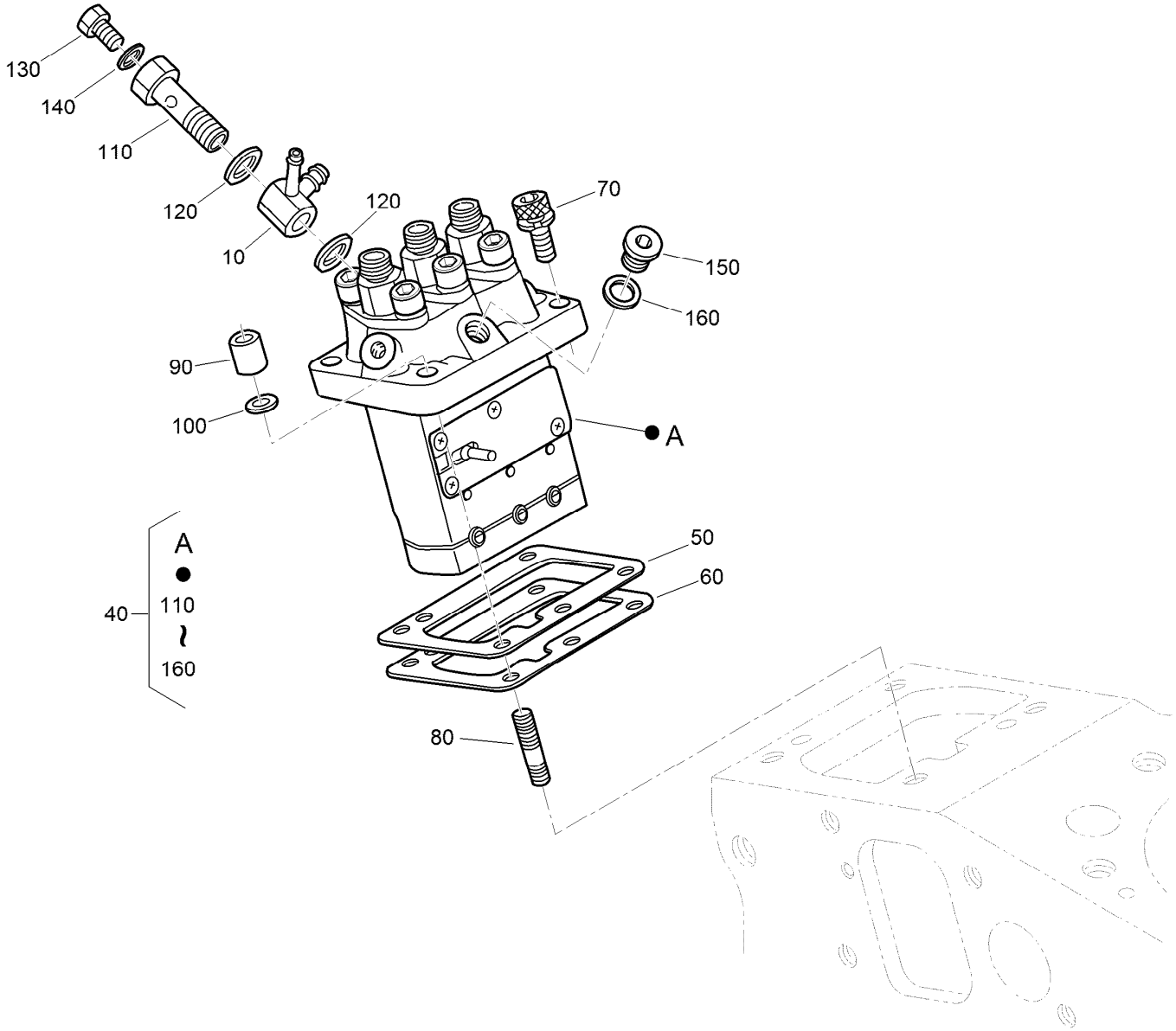

Injection Pump Assembly

Ref.	Part Number	Qty.	Description
10	110-3764	1	Joint
40	110-3765	1	Injection Pump ASM
50	115-3045	1	Shim-Injection (0.175Mm)
50	98-9456	1	Shim-Injection (0.20Mm)
50	98-9457	1	Shim-Injection (0.25Mm)
60	98-9458	1	Shim-Injection (0.30Mm)
60	115-3046	1	Shim-Injection (0.35Mm)
70	117-7564	2	Bolt-Hex Soc HD
80	98-9438	2	Stud

Ref.	Part Number	Qty.	Description
90	98-9440	2	Nut-Cap
100	98-7699	2	Washer-Spring
110	100-1896	1	Screw-Hollow
120	98-9445	2	Gasket
130	98-9430	1	Screw
140	98-9446	1	Gasket
150	98-9466	1	Plug
160	98-9451	1	Gasket

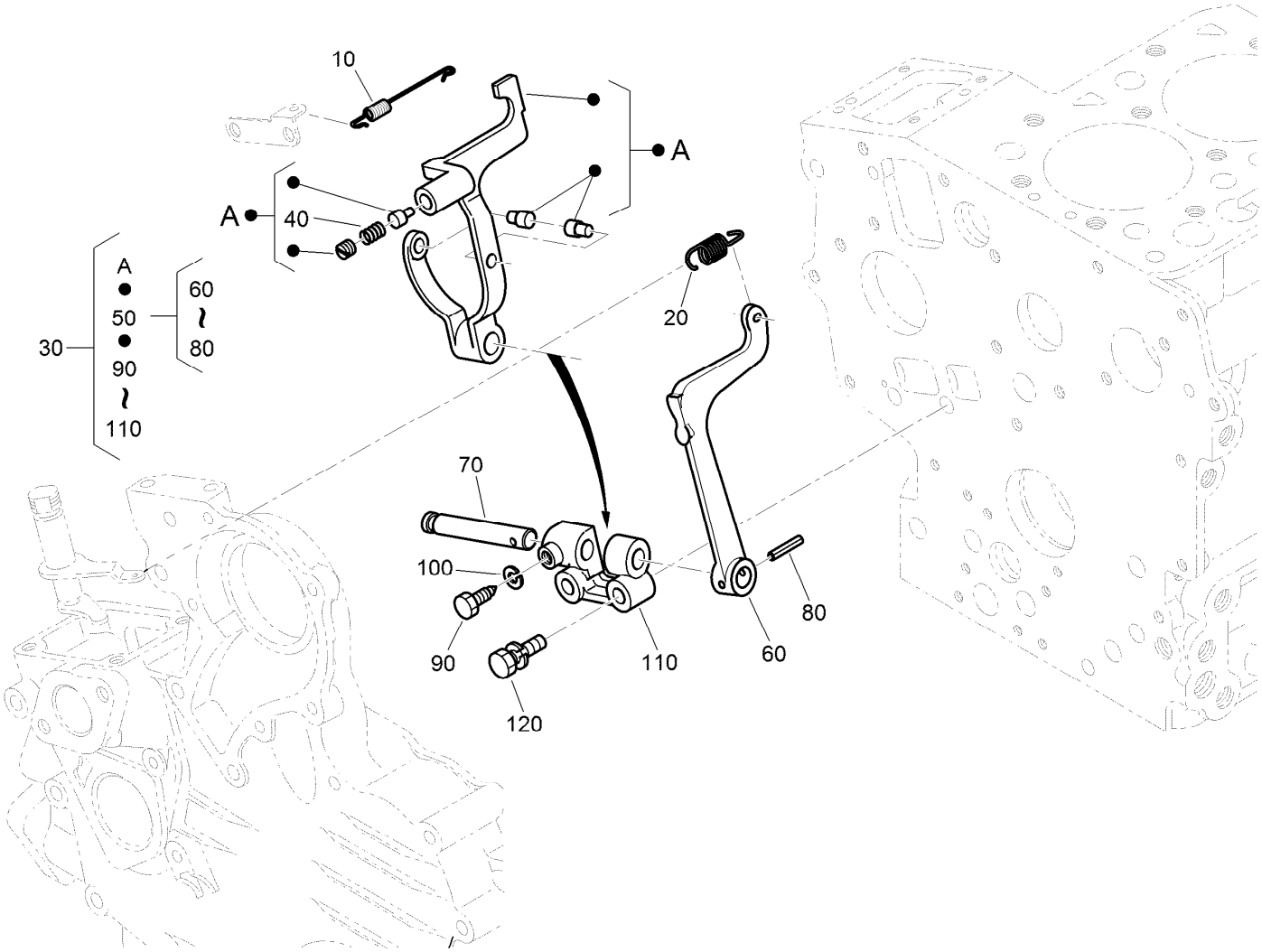

Governor Assembly

Ref.	Part Number	Qty.	Description
10	110-3766	1	Spring-Start
20	110-3767	1	Spring-Governor
30	130-1368	1	Fork Lever ASM
40	117-0313	1	Spring
50	100-1905	1	Fork Lever ASM
60	100-1907	1	Lever-Fork
70	100-1908	1	Shaft-Lever, Fork
80	100-1751	1	Pin-Spring
90	100-1845	1	Bolt
100	127-0408	1	Washer-Lock, Spring
110	100-1909	1	Holder-Lever, Fork
120	100-1763	2	Bolt

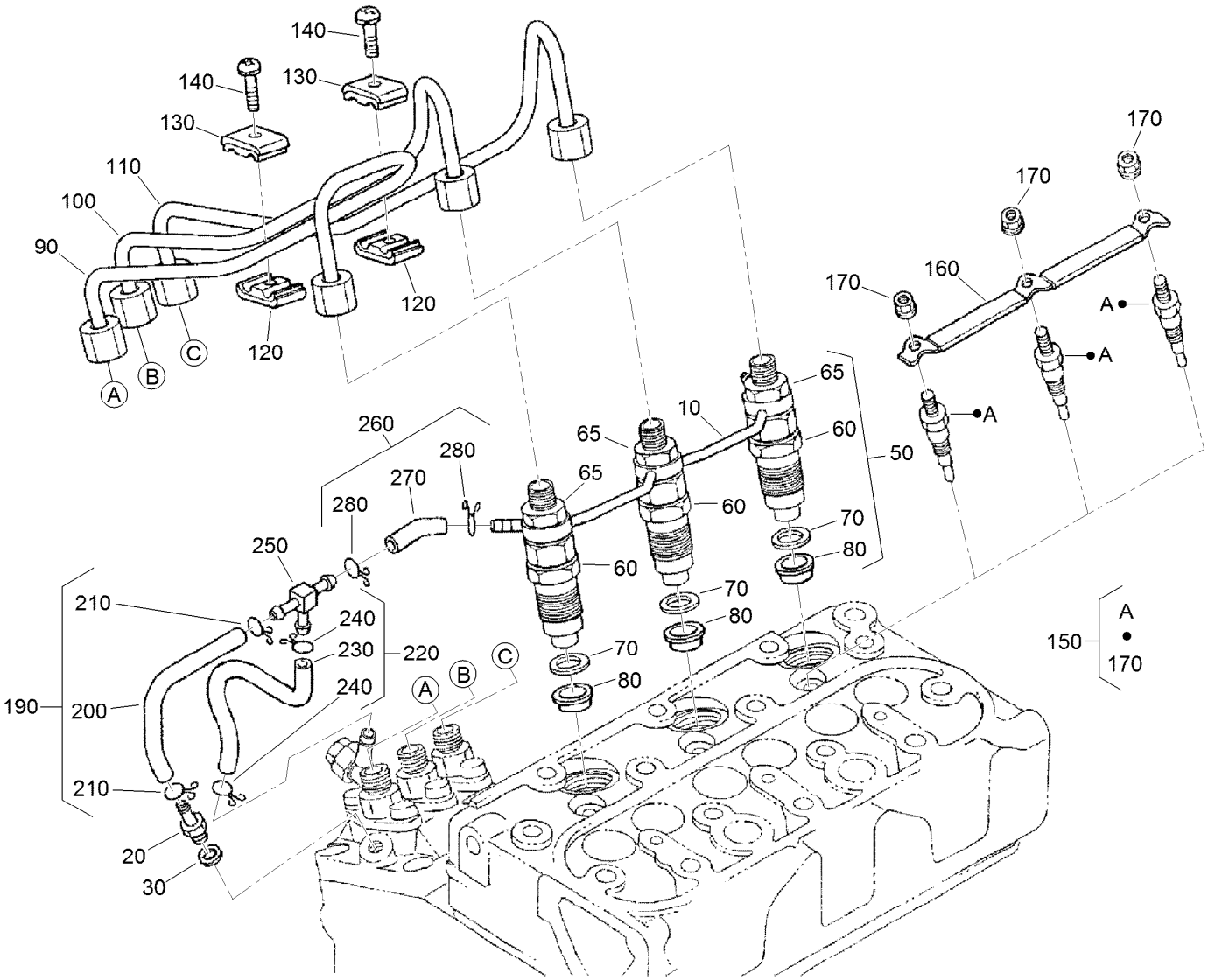

Nozzle Holder and Glow Plug Assembly

Ref.	Part Number	Qty.	Description
10	110-3780	1	Over Flow Pipe ASM
20	98-9431	1	Screw-Bleeder, Air
30	98-7654	1	Gasket
50	130-1305	3	Nozzle Holder Kit
60	130-1303	3	Nozzle Holder ASM
65	121-2411	3	Nut
70	98-7676	3	Gasket
80	98-7677	3	Seal-Heat
90	130-1522	1	Pipe-Injection
100	130-1523	1	Pipe-Injection
110	130-1541	1	Pipe-Injection
120	98-7682	2	Clamp-Pipe
130	98-7683	2	Clamp-Pipe
140	98-7684	2	Screw (W/Washer)

Ref.	Part Number	Qty.	Description
150	130-1411	3	Plug-Glow
160	110-3784	1	Cord-Plug, Glow
170	99-8377	3	Nut-Flange
190	110-3785	1	Fuel Tube ASM
200	110-3786	1	Tube-Fuel
210	98-7671	2	Clip-Pipe
220	110-3787	1	Fuel Tube ASM
230	110-3788	1	Tube-Fuel
240	98-7671	2	Clip-Pipe
250	112-8338	1	Pipe-Joint, T
260	110-3790	1	Fuel Tube ASM
270	110-3791	1	Tube-Fuel
280	98-7671	2	Clip-Pipe

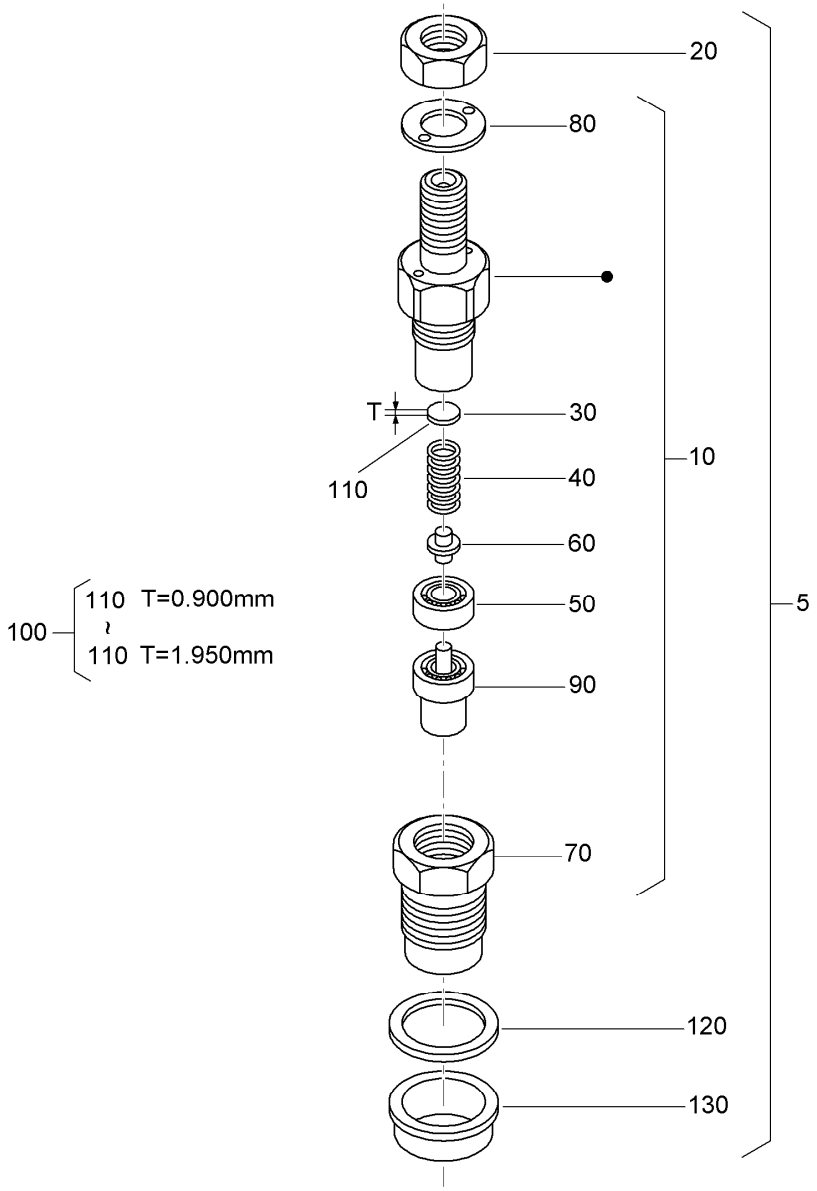

Nozzle Holder Assembly

Ref.	Part Number	Qty.	Description
5	130-1305	3	Nozzle Holder Kit
10	130-1303	3	Nozzle Holder ASM
20	121-2411	3	Nut
30	99-8302	3	Washer-Adjusting
40	99-8303	3	Spring-Nozzle
50	99-8304	3	Spacer-Distance
60	99-8305	3	Rod-Push
70	130-1304	3	Nut-Nozzle
80	99-8307	3	Washer-Plain
90	130-1497	3	Nozzle-Piece
100	98-9448	3	Adjusting Washer ASM
110	98-7642	3	Washer-Adjusting (0.900Mm)
110	98-7841	3	Washer-Adjusting (0.925Mm)
110	98-7842	3	Washer-Adjusting (0.950Mm)
110	98-7843	3	Washer-Adjusting (0.975Mm)
110	98-7844	3	Washer-Adjusting (1.000Mm)
110	98-7845	3	Washer-Adjusting (1.025Mm)
110	98-7846	3	Washer-Adjusting (1.050Mm)
110	98-7847	3	Washer-Adjusting (1.075Mm)
110	98-7848	3	Washer-Adjusting (1.100Mm)
110	98-7849	3	Washer-Adjusting (1.125Mm)
110	98-7850	3	Washer-Adjusting (1.150Mm)
110	98-7851	3	Washer-Adjusting (1.175Mm)
110	98-7852	3	Washer-Adjusting (1.200Mm)
110	98-7853	3	Washer-Adjusting (1.225Mm)
110	98-7854	3	Washer-Adjusting (1.250Mm)

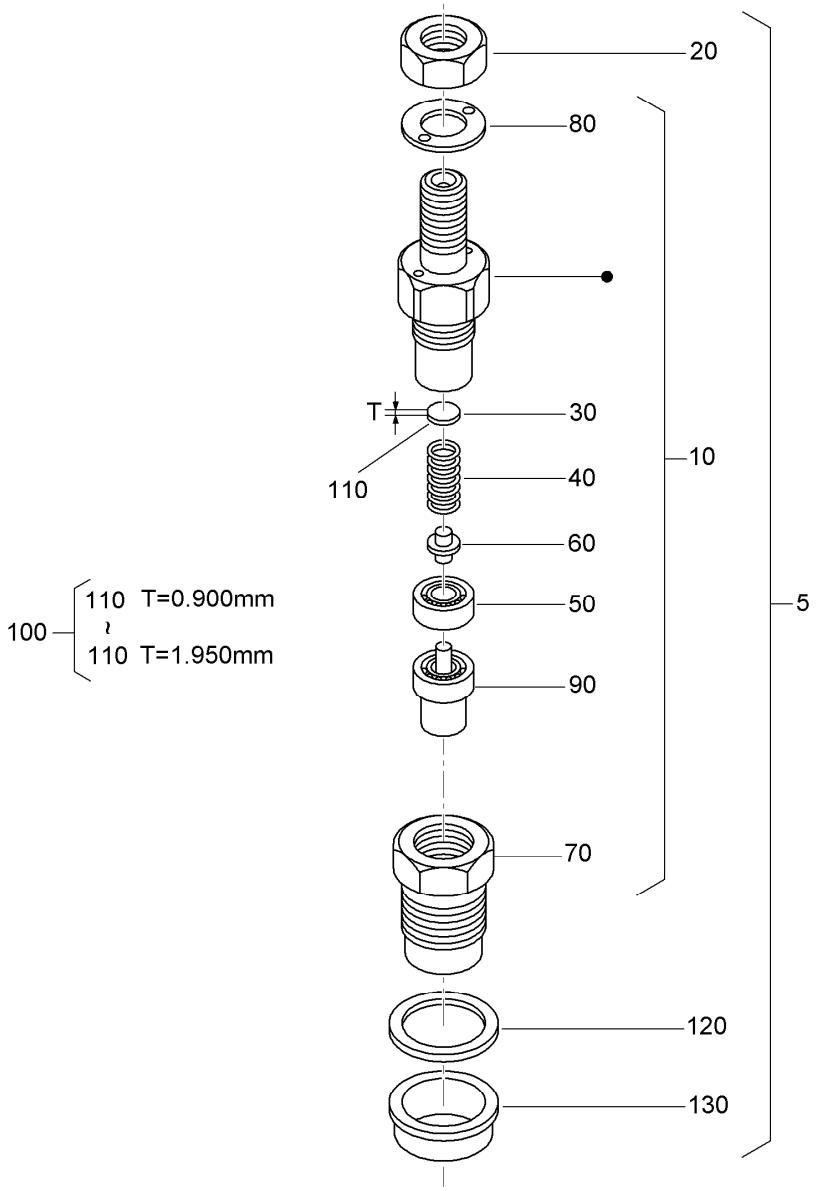

Nozzle Holder Assembly (continued)

Ref.	Part Number	Qty.	Description
110	98-7855	3	Washer-Adjusting (1.275Mm)
110	98-7856	3	Washer-Adjusting 1.300Mm)
110	98-7857	3	Washer-Adjusting (1.325Mm)
110	98-7858	3	Washer-Adjusting (1.350Mm)
110	98-7859	3	Washer-Adjusting (1.375Mm)
110	98-7860	3	Washer-Adjusting (1.400Mm)
110	98-7861	3	Washer-Adjusting (1.425Mm)
110	98-7862	3	Washer-Adjusting (1.450Mm)
110	98-7863	3	Washer-Adjusting (1.475Mm)
110	98-7864	3	Washer-Adjusting (1.500Mm)

Ref.	Part Number	Qty.	Description
110	98-7865	3	Washer-Adjusting (1.525Mm)
110	98-7866	3	Washer-Adjusting (1.550Mm)
110	98-7867	3	Washer-Adjusting (1.575Mm)
110	98-7868	3	Washer-Adjusting (1.600Mm)
110	98-7869	3	Washer-Adjusting (1.625Mm)
110	98-7870	3	Washer-Adjusting (1.650Mm)
110	98-7871	3	Washer-Adjusting (1.675Mm)
110	98-7872	3	Washer-Adjusting (1.700Mm)
110	98-7873	3	Washer-Adjusting (1.725Mm)
110	98-7874	3	Washer-Adjusting (1.750Mm)

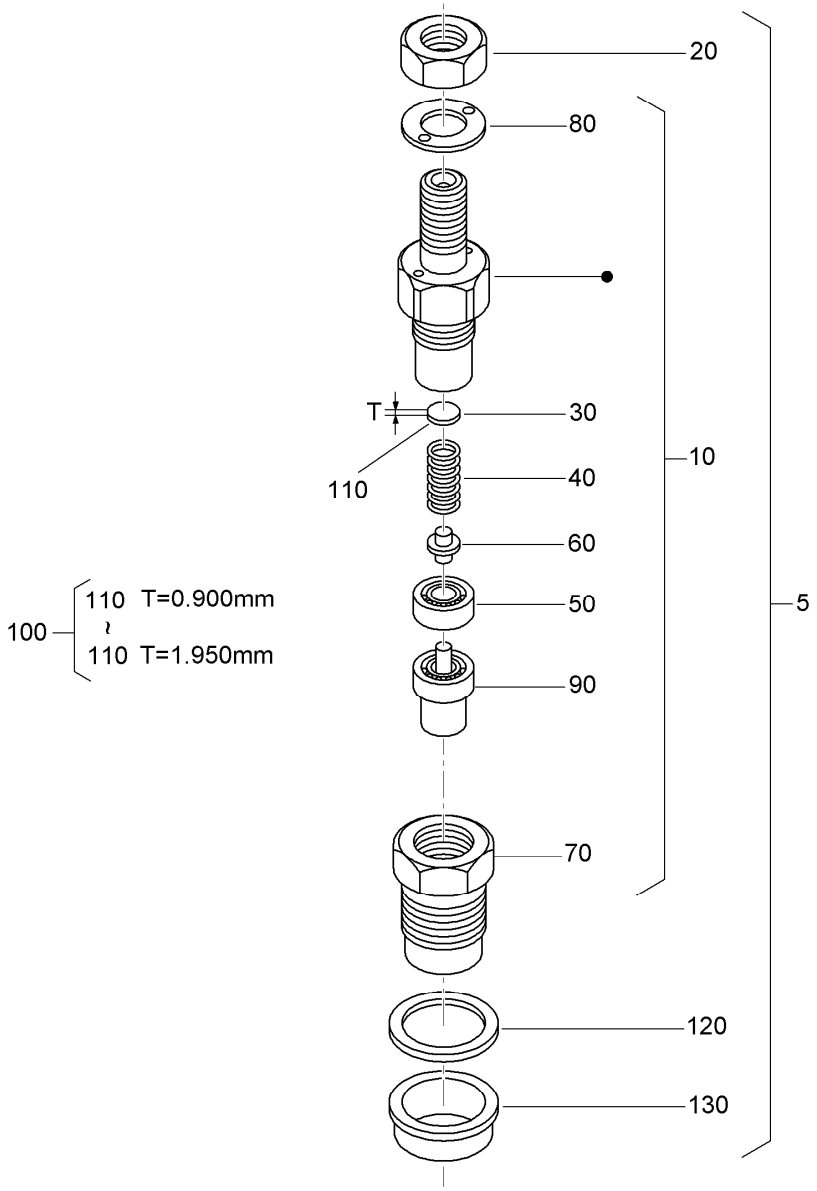

Nozzle Holder Assembly (continued)

Ref.	Part Number	Qty.	Description
110	98-7875	3	Washer-Adjusting (1.775Mm)
110	98-7876	3	Washer-Adjusting (1.800Mm)
110	98-7877	3	Washer-Adjusting (1.825Mm)
110	98-7878	3	Washer-Adjusting (1.850Mm)
110	98-7879	3	Washer-Adjusting (1.875Mm)

Ref.	Part Number	Qty.	Description
110	98-7880	3	Washer-Adjusting (1.900Mm)
110	98-7881	3	Washer-Adjusting (1.925Mm)
110	98-7882	3	Washer-Adjusting (1.950Mm)
120	98-7676	3	Gasket
130	98-7677	3	Seal-Heat

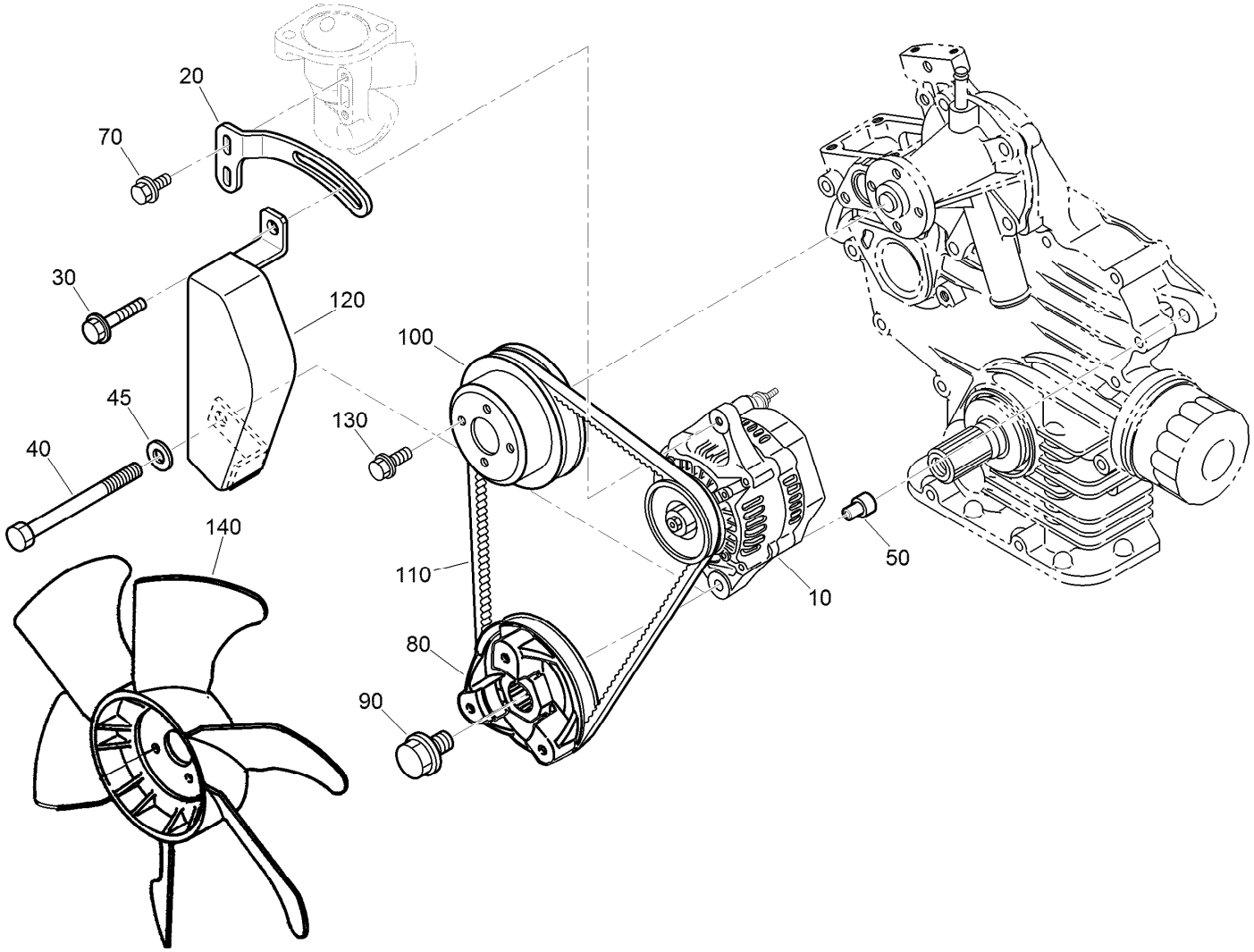

Alternator, Pulley and Fan Assembly

Ref.	Part Number	Qty.	Description
10	98-9474	1	Alternator ASM
20	110-3792	1	Stay-Alternator
30	121-3800	1	Bolt-Sems
40	98-7556	1	Bolt
45	120-5832	1	Washer-Plain
50	110-3794	1	Collar
70	98-7692	2	Bolt
80	112-2510	1	Pulley-Drive, Fan
90	100-1978	1	Bolt
100	100-1921	1	Pulley-Fan
110	112-2511	1	Belt
120	110-3797	1	Cover
130	99-8363	4	Bolt-Flange
140	112-2513	1	Fan

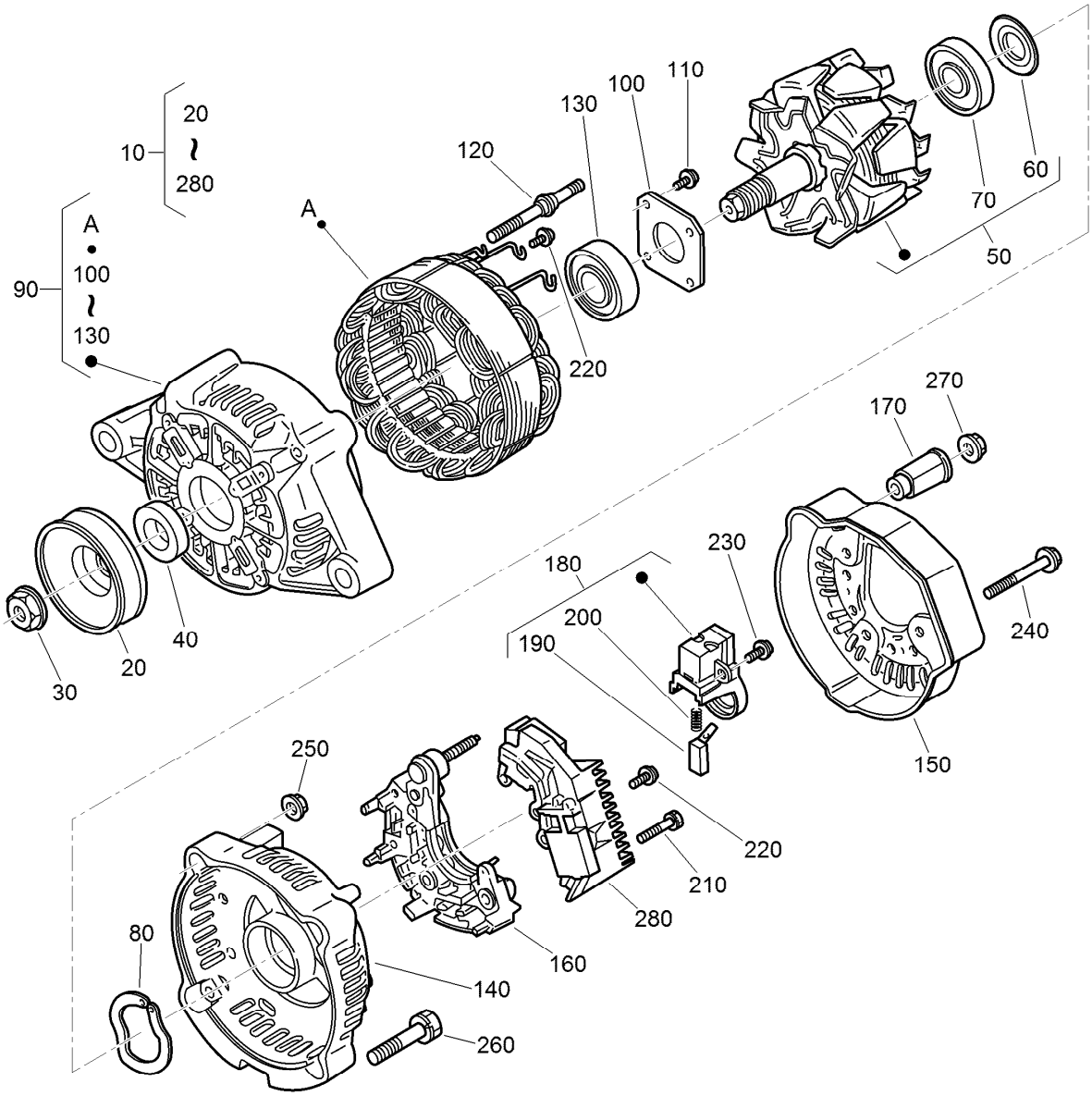

Alternator Components Assembly

Ref.	Part Number	Qty.	Description
10	98-9474	1	Alternator ASM
20	98-9453	1	Pulley-Dynamo
30	98-7708	1	Nut
40	98-7709	1	Collar
50	107-0136	1	Rotor ASM
60	98-7711	1	Cover-Bearing
70	107-0138	1	Bearing-Ball
80	98-7713	1	Washer-Thrust
90	107-0139	1	Drive End Frame ASM
100	98-7715	1	Plate-Retainer
110	98-7716	4	Screw-Head, Round
120	98-7717	2	Bolt-Through
130	133-2811	1	Bearing
140	107-9087	1	Frame-End

Ref.	Part Number	Qty.	Description
150	107-0140	1	Cover-End
160	127-1612	1	Rectifier ASM
170	98-7722	1	Bushing-Insulation
180	107-0141	1	Brush Holder ASM
190	98-7724	2	Brush
200	98-7725	2	Spring-Brush
210	98-7726	2	Screw-Head, Round
220	98-7727	6	Screw-Head, Round
230	98-7728	1	Screw-Head, Round
240	98-7729	3	Bolt
250	98-7730	2	Nut
260	98-7731	2	Bolt
270	98-7732	1	Nut
280	110-3799	1	Regulator ASM

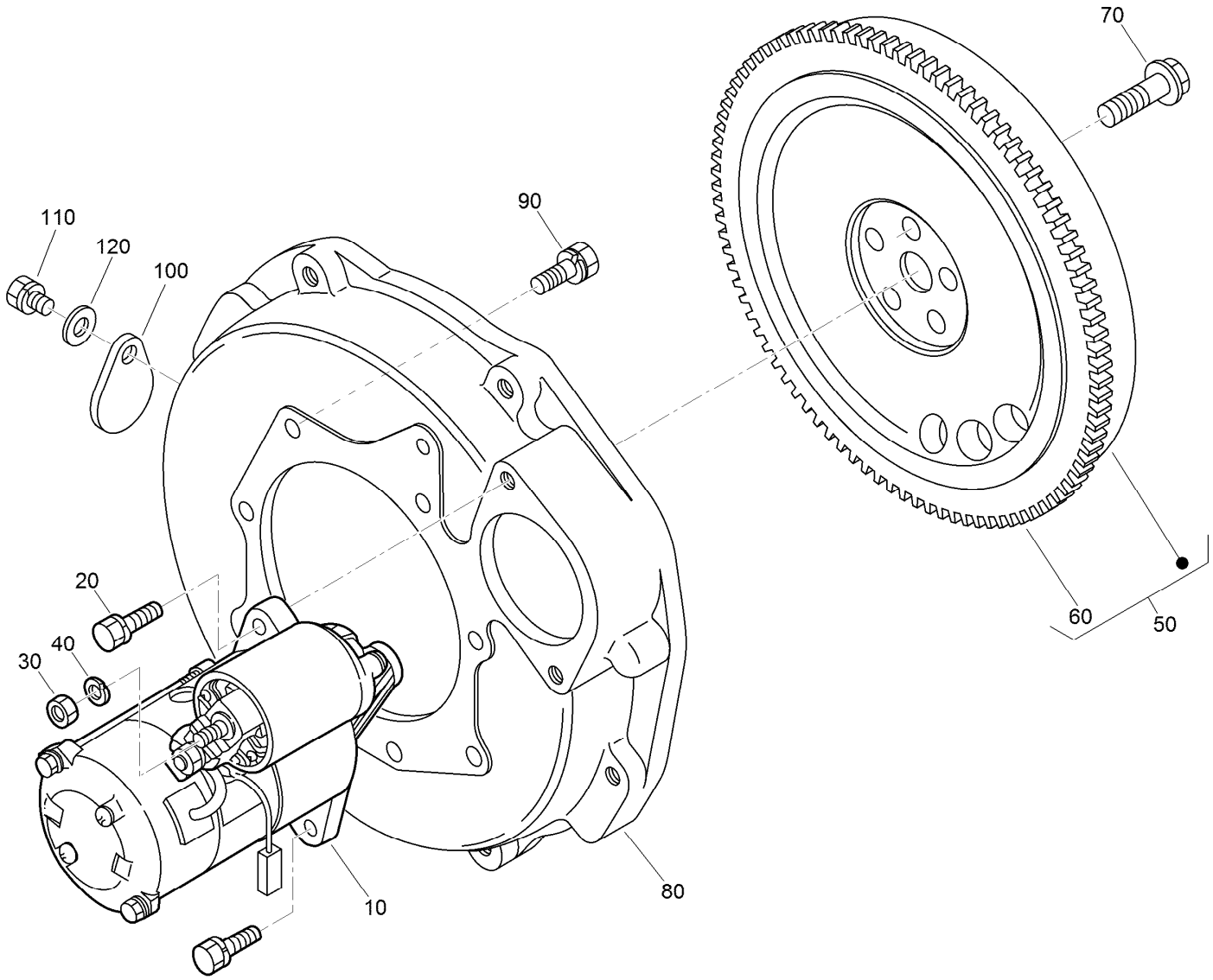

Starter and Flywheel Assembly

Ref.	*Part Number*	*Qty.*	*Description*
10	100-2179	1	Starter ASM
20	98-7438	2	Bolt
30	98-7534	1	Nut
40	105-2893	1	Washer-Spring
50	130-1496	1	Flywheel ASM
60	127-1604	1	Gear-Ring
70	100-1930	5	Bolt-Flywheel
80	117-1703	1	Housing-Flywheel
90	98-9359	8	Bolt
100	100-2177	1	Cover
110	100-9195	1	Bolt
120	120-5832	1	Washer-Plain

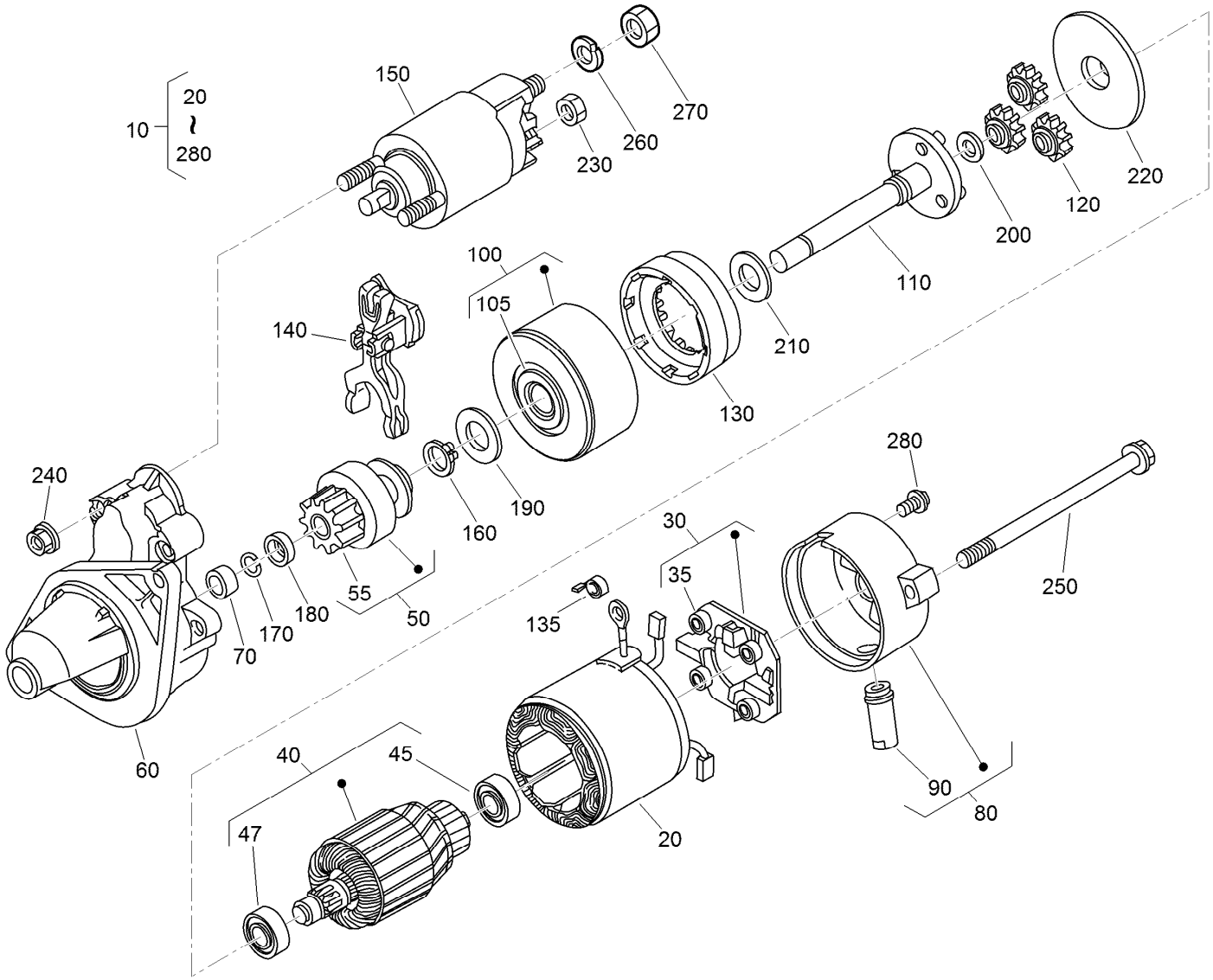

Starter Component Assembly

Ref.	Part Number	Qty.	Description
10	100-2179	1	Starter ASM
20	100-2181	1	Starter Yoke ASM
30	100-2222	1	Holder ASM
35	127-0415	4	Spring-Brush
40	100-2182	1	Armature ASM
45	98-9412	1	Bearing-Ball
47	98-9411	1	Bearing-Ball
50	100-2185	1	Starter Clutch ASM
55	112-2833	1	Gear-Pinion
60	100-2180	1	Starter Housing ASM
70	100-2183	1	Bearing
80	100-2186	1	Frame ASM
90	100-2213	1	Cover
100	100-2223	1	Bearing ASM
105	127-0414	1	Bearing
110	100-2187	1	Starter Shaft ASM
120	100-2220	3	Gear

Ref.	Part Number	Qty.	Description
130	100-2221	1	Gear
135	98-7750	4	Spring-Brush
140	100-2218	1	Lever
150	100-2211	1	Magnetic Switch ASM
160	100-2219	1	Ring-Snap
170	100-2212	1	Ring-Snap
180	100-2216	1	Collar
190	100-2224	1	Washer-Plain
200	100-2225	1	Washer-Plain
210	100-2226	1	Washer-Plain
220	100-2227	1	Plate
230	99-8371	1	Nut-Hex
240	100-1813	2	Nut
250	100-2210	2	Bolt-Through
260	100-2215	1	Washer-Spring
270	100-2171	1	Nut-Hex
280	100-2188	2	Screw

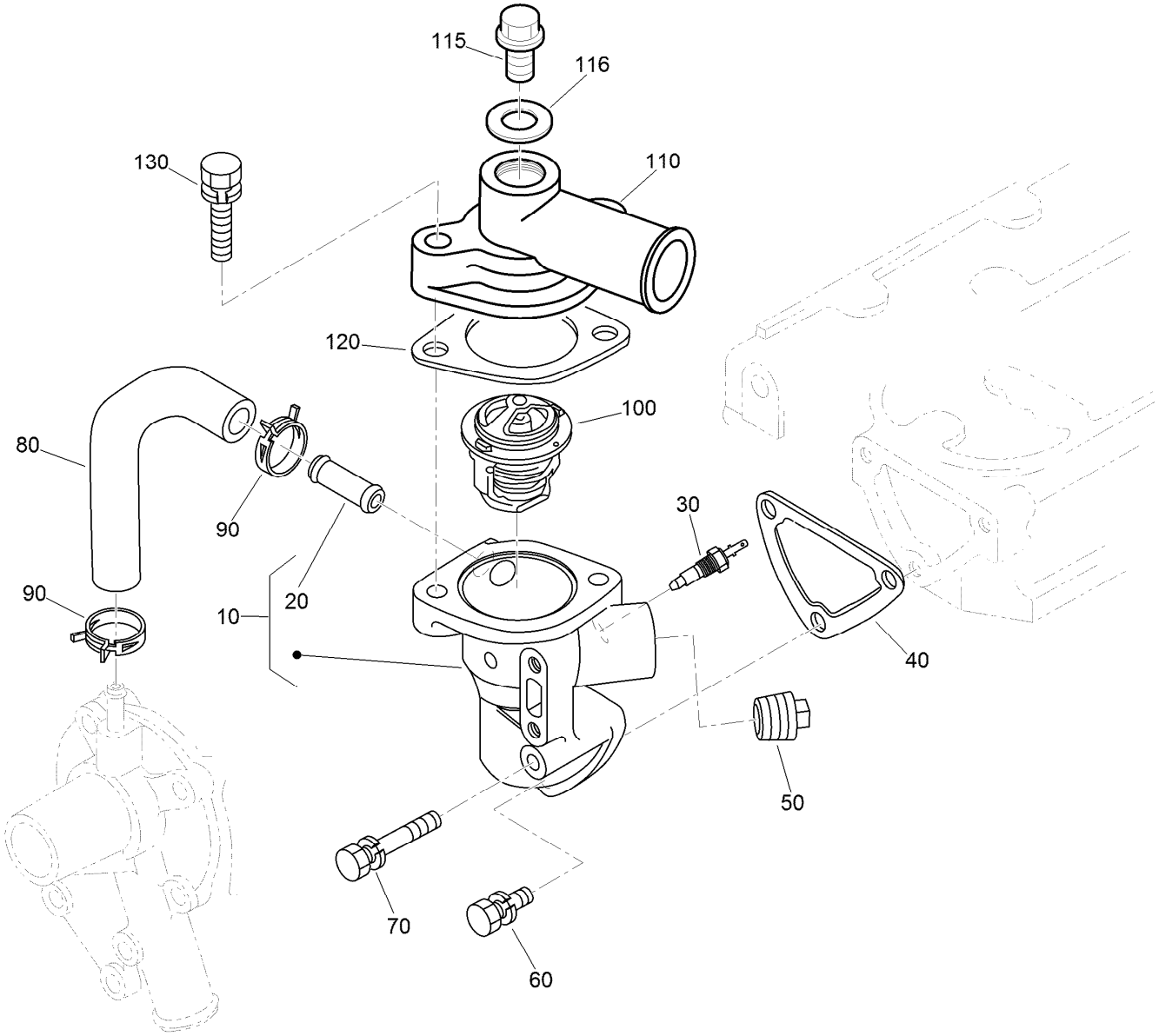

Water Flange and Thermostat Assembly

Ref.	Part Number	Qty.	Description
10	110-3819	1	Water Flange ASM
20	98-9580	1	Pipe-Return, Water
30	99-3582	1	Thermoswitch
40	110-3820	1	Gasket-Flange, Water
50	110-3821	1	Plug
60	98-7692	2	Bolt
70	125-9063	1	Bolt-Sems
80	110-3822	1	Pipe-Return, Water
90	125-9078	2	Clamp-Hose
100	98-7778	1	Thermostat ASM
110	112-2512	1	Cover-Thermostat
115	105-3747	1	Plug
116	99-3583	1	Gasket
120	105-3748	1	Gasket-Thermostat
130	98-7777	2	Bolt

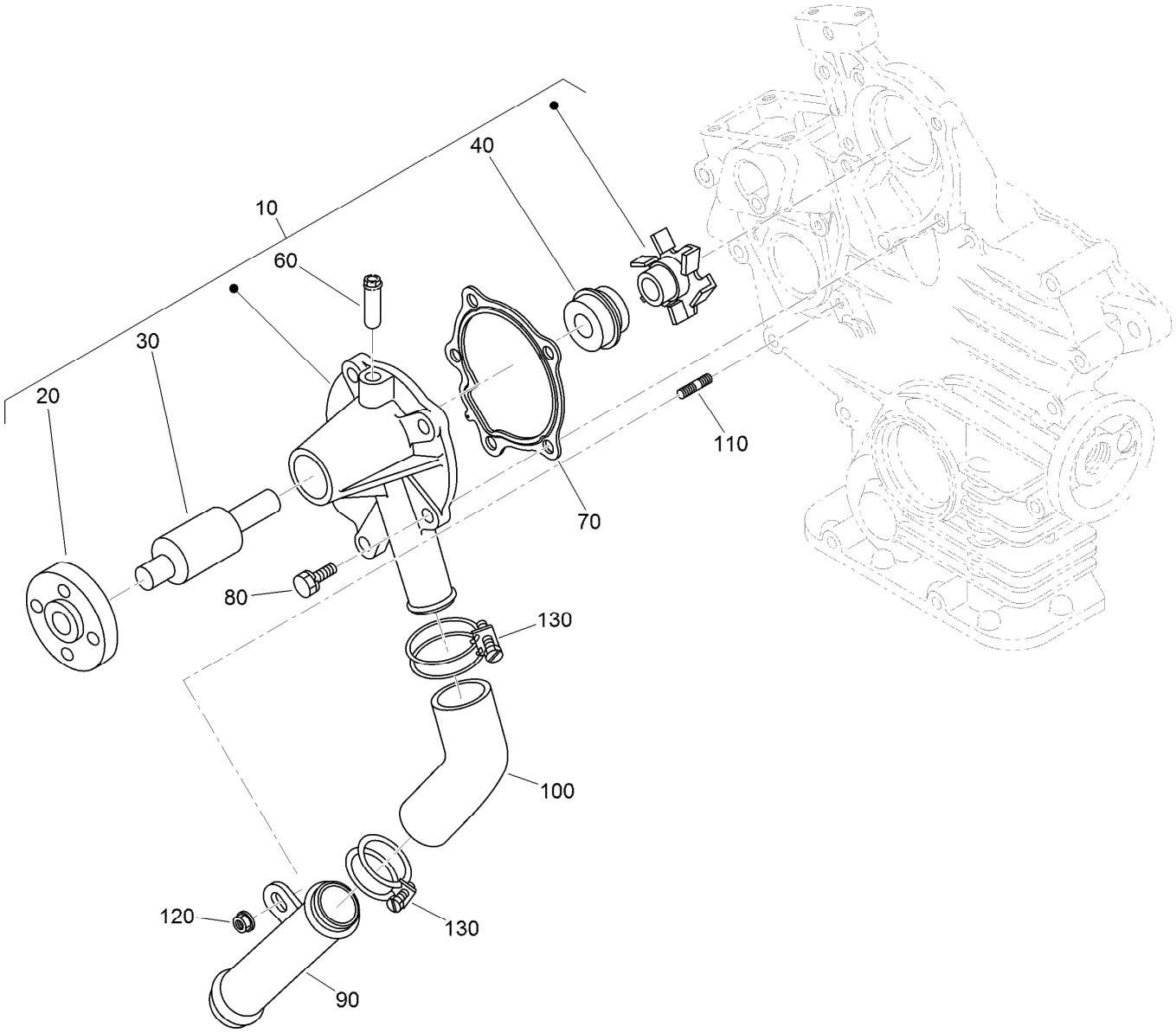

Water Pump and Water Pipe Assembly

Ref.	Part Number	Qty.	Description
10	110-3824	1	Water Pump ASM
20	125-9081	1	Flange-Pump, Water
30	100-1934	1	Bearing-Ball
40	99-3518	1	Water Pump Seal ASM
60	100-1932	1	Pipe-Return, Water
70	117-0330	1	Gasket-Pump, Water
80	100-1750	4	Bolt
90	100-1918	1	Pipe-Water
100	110-3827	1	Pipe-Water
110	100-1924	1	Stud
120	100-2203	1	Nut-Flange
130	110-3828	2	Band-Pipe

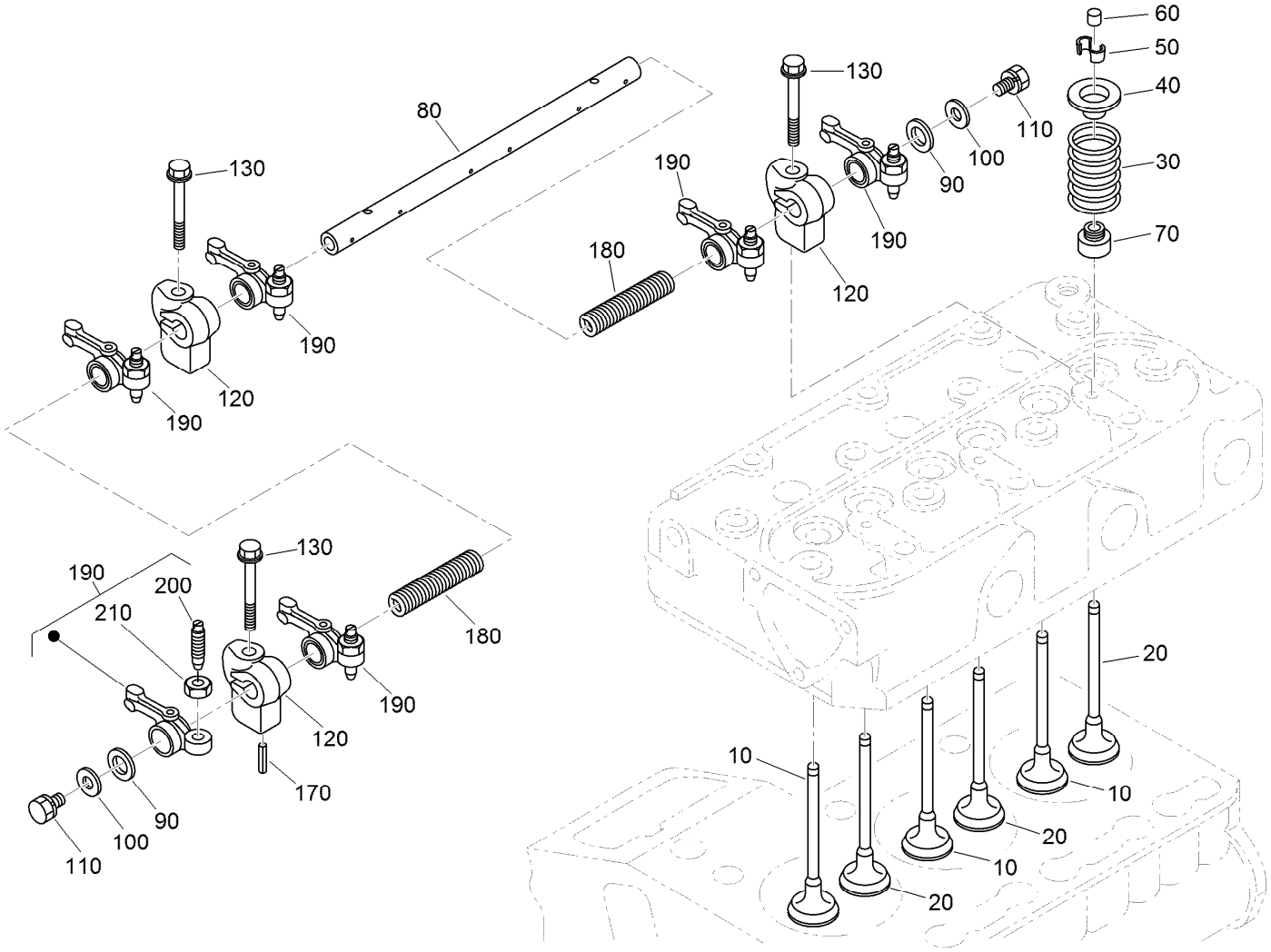

Valve and Rocker Arm Assembly

Ref.	Part Number	Qty.	Description
10	112-2514	3	Valve-Inlet
20	112-2515	3	Valve-Exhaust
30	100-1823	6	Spring-Valve
40	100-1825	6	Retainer-Spring, Valve
50	120-3136	6	Collet-Spring, Valve
60	100-2155	6	Cap-Valve
70	100-1797	6	Seal-Stem, Valve
80	112-8341	1	Shaft-Arm, Rocker
90	100-2044	2	Washer

Ref.	Part Number	Qty.	Description
100	110-3832	2	Washer-Plain
110	100-1762	2	Bolt
120	110-3833	3	Bracket-Arm, Rocker
130	110-3834	3	Bolt-Flange
170	98-7602	1	Pin-Spring
180	112-8342	2	Spring
190	100-1884	6	Rocker Arm ASM
200	100-1885	6	Screw-Adjusting
210	100-1827	6	Nut

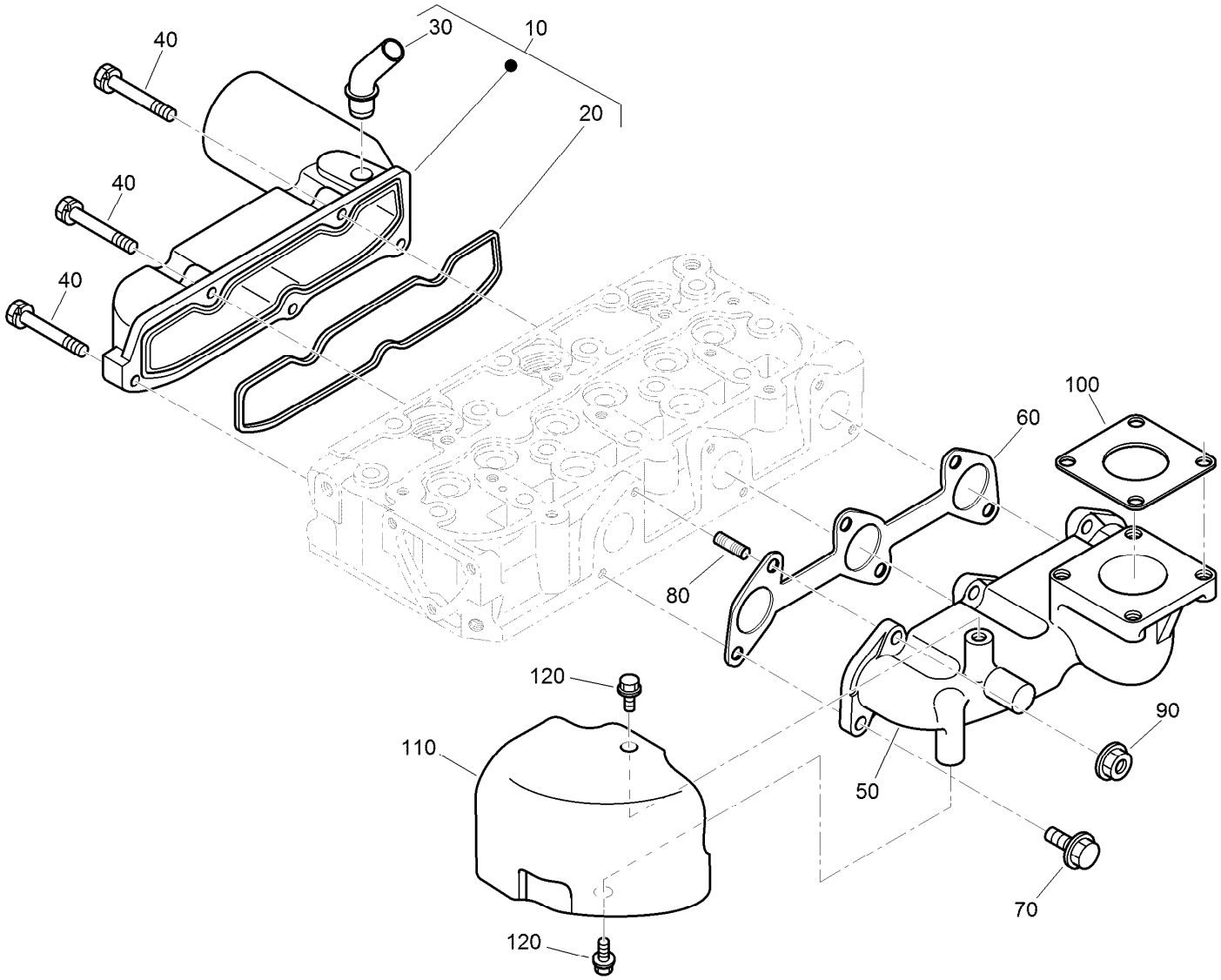

Inlet and Exhaust Manifold Assembly

Ref.	*Part Number*	*Qty.*	*Description*
10	120-3141	1	Intake Manifold ASM
20	110-3838	1	Gasket-Manifold, Intake
30	121-2417	1	Pipe-Breather
40	98-9352	5	Bolt
50	112-2516	1	Manifold-Exhaust
60	110-3840	1	Gasket-Manifold, Exhaust
70	130-1154	3	Screw-Hex HD
80	130-1156	3	Bolt-Stud
90	100-1778	3	Nut
100	99-8343	1	Gasket-Muffler
110	112-2517	1	Cover-Heat
120	130-1173	2	Screw-Flange HD

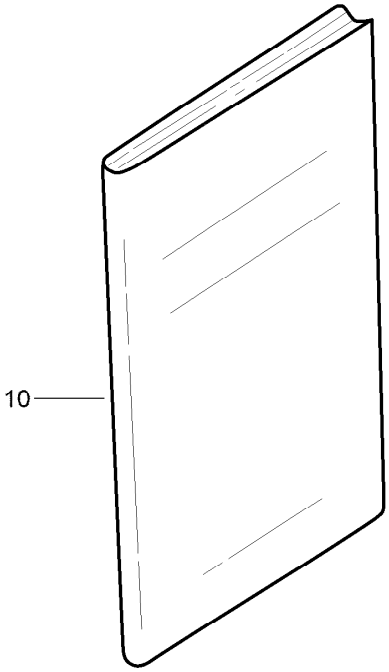

Miscellaneous Engine Parts

Ref.	*Part Number*	*Qty.*	*Description*
10	130-1513	1	Manual-Operator

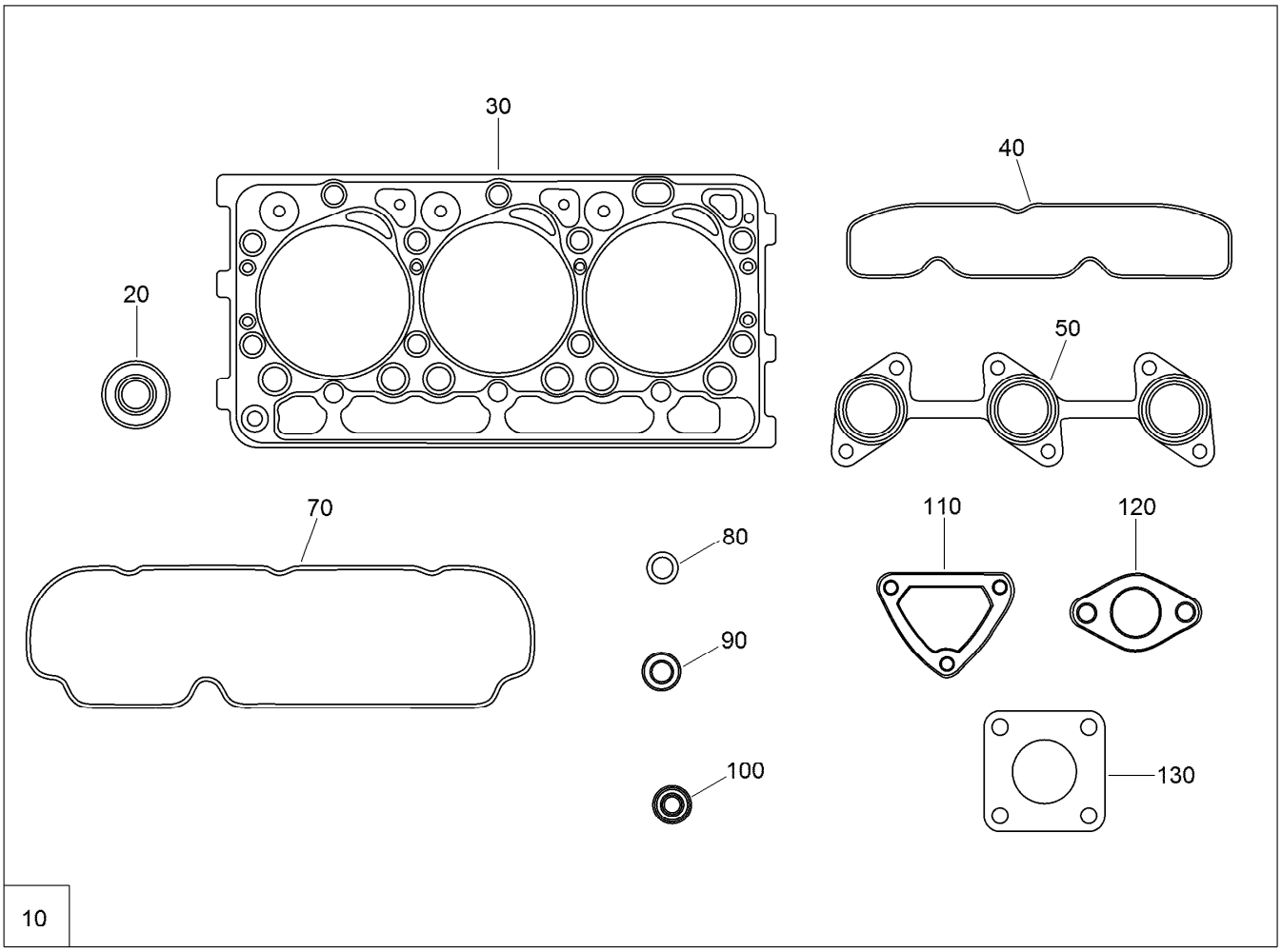

Upper Engine Gasket Kit

Ref.	*Part Number*	*Qty.*	*Description*
10	112-2518	1	Upper Gasket Kit
20	100-1797	6	Seal-Stem, Valve
30	112-2520	1	Gasket-Head, Cylinder
40	110-3838	1	Gasket-Manifold, Intake
50	110-3840	1	Gasket-Manifold, Exhaust
70	112-2521	1	Gasket-Cover, Head
80	99-3446	1	O-Ring
90	98-7676	3	Gasket
100	98-7677	3	Seal-Heat
110	110-3820	1	Gasket-Flange, Water
120	105-3748	1	Gasket-Thermostat
130	99-8343	1	Gasket-Muffler

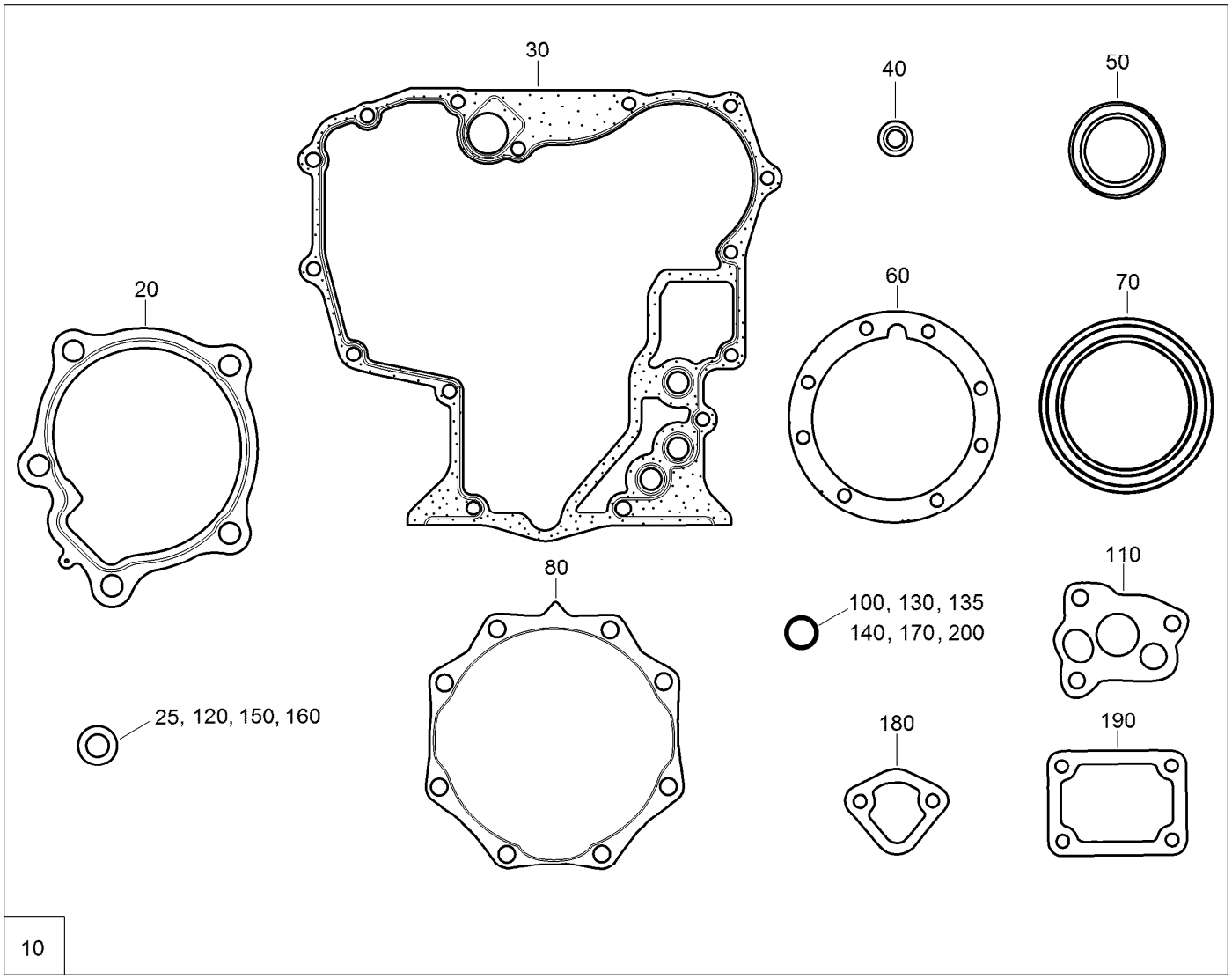

Lower Engine Gasket Kit

Ref.	Part Number	Qty.	Description
10	117-1706	1	Lower Gasket Kit
20	117-0330	1	Gasket-Pump, Water
25	98-7524	1	Gasket
30	117-0327	1	Gasket-Case, Gear
40	112-8325	1	Washer
50	120-7852	1	Seal-Oil
60	112-2812	1	Gasket-Case, Bearing
70	110-3724	1	Seal-Oil
80	100-1876	1	Gasket-Cover, Case
100	100-2209	1	O-Ring
110	100-2003	1	Gasket-Pump, Oil

Ref.	Part Number	Qty.	Description
120	98-7654	1	Gasket
130	105-3776	1	O-Ring
135	98-9722	1	O-Ring
140	100-2207	1	O-Ring
150	98-7654	2	Gasket
160	110-9715	1	Gasket-Pan, Oil
170	100-2208	1	O-Ring
180	98-9636	1	Gasket-Pump, Fuel
190	100-1962	1	Gasket-Plate, Control
200	110-3762	1	O-Ring

Attachments and Accessories

For 22323G TX 525 Compact Tool Carrier

Product Name	Model/Part
Light Kit	100-8840
Track Kit	104-6106
Road Wheel Kit	106-7620
Reference Guide Kit	107-9310
Track-Aggressive Tread	108-5640
4 Cubic Foot Standard Bucket	22409
Loose Materials Bucket	22410
48in Hydraulic Blade	22414
Rotary Broom	22415
Bore Drive Head	22420
Rod and Reamer	22421
Multi-Purpose Tool	22423
Direct Drive Power Box Rake	22426
Stump Grinder	22429
Tree Forks	22438
Cement Bowl	22442
40in Tiller	22445
Snowthrower	22456
Crumber Kit	22464
Trench Filler	22472
High-Torque Trencher Head	22473
High-Speed Trencher Head	22474
TX Platform	22476
Narrow Bucket	22520
Grapple Rake	22521
Auger Head	22805
Universal Swivel Auger Head	22806
18in Auger Bit	22814
24in Auger Bit	22815
30in Auger Bit	22816
12in Auger Bit Extension	22818
24in Auger Bit Extension	22819
6in Full-Flight Auger Bit	22820
9in Full-Flight Auger Bit	22821
12in Full-Flight Auger Bit	22822
15in Full-Flight Auger Bit	22823
Vibratory Plow	22911
Soil Cultivator	23102
Concrete Breaker	23135
Backhoe Fitup Kit	23162
Backhoe	23163
Adjustable Forks	23164
Leveler	23165
Spark Arrestor Screen	75-6880

Notes:

Notes:

TORO®

Count on it.