FORM NO. 3321–633 Rev A

TORO®

1232 Power Shift®
Snowthrower

Model No. 38590 – 9900001 & Up
Model No. 38591 – 9900001 & Up

Parts Catalog

ORDERING REPLACEMENT PARTS

To order replacement parts, please supply: the part number, the quantity, and the description of each part desired.

Contents

Description	Page
Housing Assembly	1
Housing Assembly (cont.)	2
Transmission Assembly No. 66−8030	3
Transmission Assembly No. 66−8030 (cont.)	4
Engine & Transmission Drive Assembly	5
Traction Linkage Assembly	6
Handle Assembly	7
Handle Assembly (cont.)	8
Traction Drive Assembly	9
Traction Drive Assembly (cont.)	10
32” Auger Gearcase Assembly No. 74−1562	11
Carburetor No. 640105	12
Engine Tecumseh Model OHSK120−223619A (Model 38591 Only)	13−15
Engine Tecumseh Model OHSK120−223620A (Model 38590 Only)	16−18
Tecumseh Starter No. 590749	19
Tecumseh Starter No. 590733 (Optional)	20
Toro Part Number Index	21−25

Note:

Accessories

Description	Model / Parts No.
110 Vac Electric Starter Kit	Model No. 38039
Light Kit (Optional Model No. 38590 Only) (Standard Model No. 38591 Only)	Part No. 66–7941
Tire Chain Kit (For Std. Axle, Not For Use With Differential Kit	Part No. 63–3040
Differential Kit (Model No. 38591 Only)	Model No. 38038
Snow Cab	Part No. 68–9500
Weight Kit (Required with Snow Cab)	Part No. 74–1190
Drift Breaker	Part No. 66–7980

Part Description Abbreviations

Part descriptions in this catalog may include the following abbreviations.

Abbreviation	Meaning
AR	as required
ASM	assembly
CARR	carriage
DEG	degrees
FH	flat head
GA	gauge
HF	hex flange
HFW	hex flange washer
HH	hex head
HHF	hex head flange
HHST	hex head self tapping
HJ	hex jam
HOC	height-of-cut
HS	hex socket
HSBH	hex socket button head
HSFH	hex socket flat head
HSH	hex socket head
HWH	hex washer head
HWHTF	hex washer head thread forming
INC	incorporated
LH	left hand

© The TORO Company — 1998
All Rights Reserved

PH . . . . . pan head
PPH . . . . . Phillips pan head
PTO . . . . . power take off
RH . . . . . right hand
SFH . . . . . slotted fillister head
SH . . . . . square head
SHWH . . . . . slotted hex washer head
SPH . . . . . slotted pan head
STD . . . . . standard
TAP . . . . . self tapping
TH . . . . . truss head
TTH . . . . . Torx truss head
WH . . . . . wing head

Important Format Explanations

This catalog uses special formats to convey information in illustrations and parts lists. Specifically, one format is used in conjunction with service assemblies and another with quantities associated with reference numbers.

Service Assemblies

Parts within service assemblies have reference numbers in the form *X:Y. X* is the reference number of the service assembly and *Y* is a sequential number unique to each part within the service assembly.

For example, a wheel assembly might be identified by reference number 6, the tire by 6:1, the valve by 6:2, and the wheel by 6:3. When you order the assembly identified by reference number 6, you receive all parts identified by reference numbers 6:1, 6:2, and 6:3. However, you may also order any part individually.

Reference numbers of this type appear in part lists and as callouts in illustrations.

Reference Numbers with Quantities

Illustrations may have a quantity in parentheses next to a reference number, in the form *X (Y). X* is the reference number. *Y* in parentheses is the quantity of the part identified by the reference number.

For example, the illustration callout 4 (2) indicates that two parts are used in that instance.

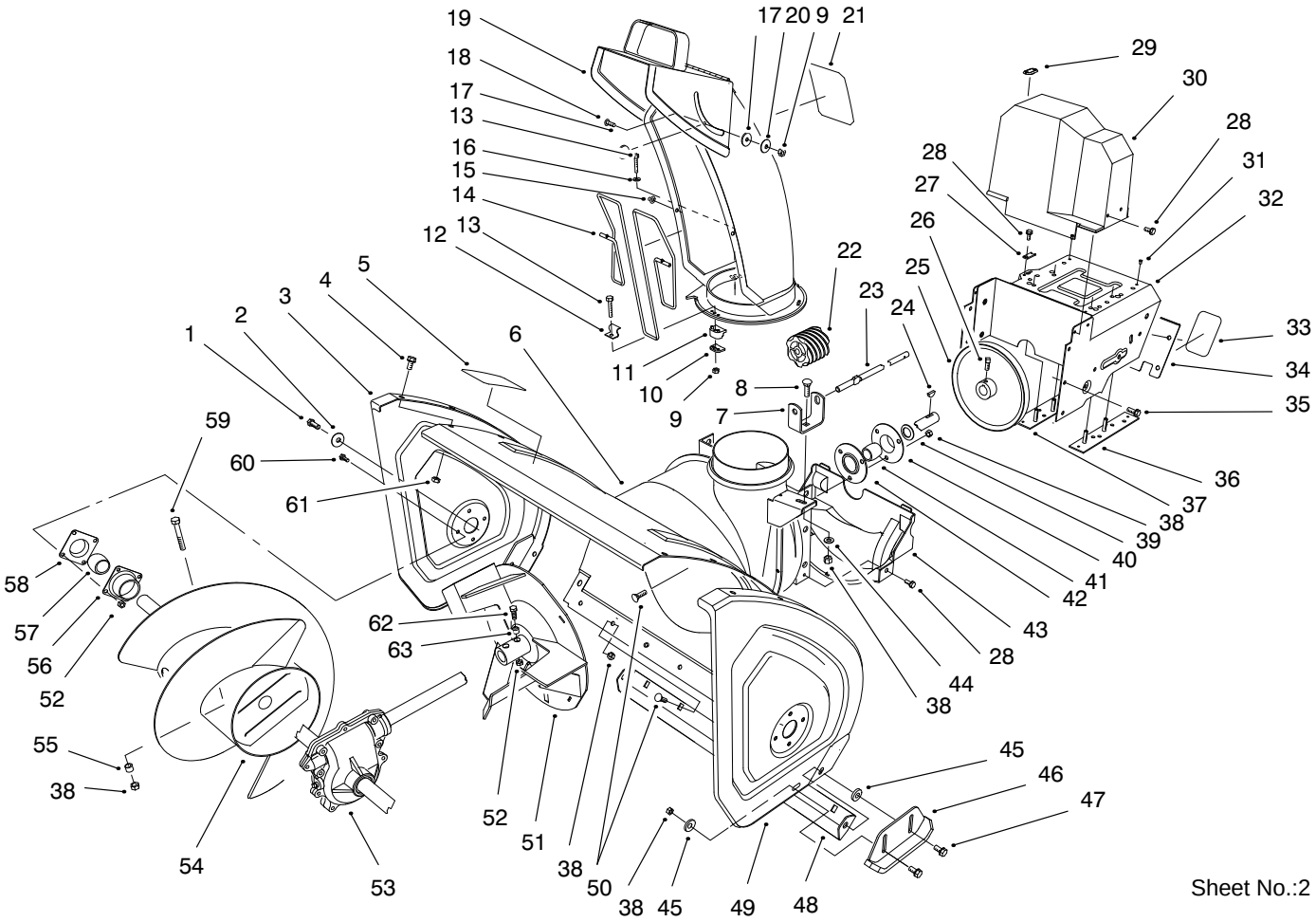

Housing Assembly

Ref. No.	Part No.	Qty.	Description
1	323–4	2	Screw–HH
2	3–0750	2	Washer
3	66–7821–01	1	Plate–Side, RH
4	3234–28	12	Screw–Hfh
5	53–7670	1	Decal–Warning Auger (Model 38590)
5	94–2568	1	Decal–Warning (Model 38591)
6	62–0722–01	1	32” Housing Wa (Red)
7	63–2180	1	Bracket–worm, Chute
8	3230–2	1	Screw–CARR
9	3296–2	4	Nut–Lock
10	63–2670	3	Plate–Retainer, Chute
11	62–1430	3	Retainer–Chute
12	63–3130	1	Clip–Guard Chute
13	3274–13	3	Screw–HSH
14	63–3020	1	Guard–Chute
15	3290–326	2	Nut–Push
16	3256–14	1	Washer–Flat
17	63–2900	2	Washer–Plastic
18	32122–32	1	Screw
19	62–0840–03	1	Chute ASM, Welded
20	3256–61	1	Washer–Flat
21	94–8079	1	Decal–Danger, Discharge (Model 38590)

Ref. No.	Part No.	Qty.	Description
21	94–2559	1	Decal–Danger (Model 38591)
22	62–0820	1	Gear–Worm
23	62–1720	1	Rod–Chute, Lower
24	3257–23	1	Key–Woodruff
25	62–1300	1	Pulley–Impeller
26	3242–4	2	Screw–SQH
27	63–2300	1	Retainer–Cable
28	32144–4	6	Screw–HH
29	63–3290	1	Cover–Cable
30	63–2080	1	Cover–Belt, Upper
31	3269–23	4	Rivet–Pop
32	66–6980–01	1	Engine Frame ASM, Welded
33	68–9390	1	Decal (Model 38590)
34	62–1440–01	1	Cover–Frame, Engine
35	32144–14	6	Screw–HWH
36	68–4110	1	Plate ASM–Frame, LH, Welded
37	68–4100	1	Plate ASM–Frame, RH, Welded
38	3296–29	16	Nut–Lock
39	252–80	1	Bearing–Thrust
40	26–6110	1	Flange–Cup, Bearing
41	63–3450	1	Bearing–Ball
42	26–6120	1	Flange–Cup, Bearing

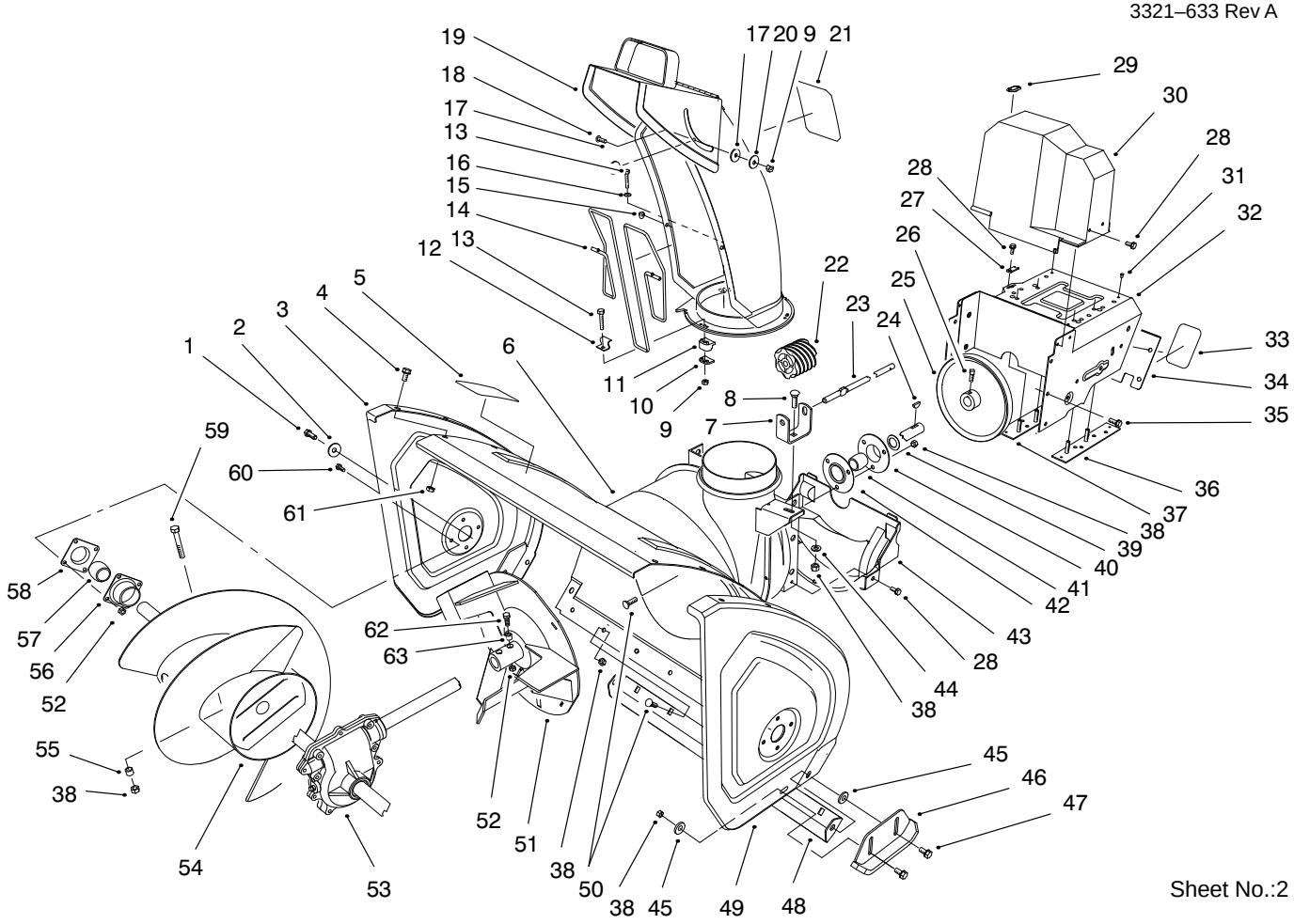

Housing Assembly (cont.)

Ref. No.	Part No.	Qty.	Description
43	68–8410	1	Cover–Belt, Lower
44	3256–23	1	Washer–Flat
45	52–2861	4	Washer
46	74–1440–01	2	Skid ASM, Welded
47	3234–5	4	Screw–HHF
48	66–7760–01	1	Scraper Blade Wa (Red)
49	66–7831–01	1	Plate–Side, LH
50	3230–23	11	Screw–CARR
51	66–7920–03	1	4 Blade Impeller Wa (Black)
52	3296–42	10	Nut–Lock
53	74–1562	1	Auger Gearcase ASM
54	68–7452–03	1	RH Auger Wa 32” (Black)
54	68–7462–03	1	LH Auger Wa 32” (Black)
55	25–5090	1	Spacer–Hub, Auger
56	20–0990	2	Flange–Bearing, Front
57	20–0980	2	Bearing
58	20–1000	2	Flange–Bearing, Rear
59	322–12	2	Screw–HH,
60	321–3	8	Screw–HH,
61	3296–47	12	Nut–Lock
62	321–44	2	Screw–HHF

Ref. No.	Part No.	Qty.	Description
63	66–8010	2	Spacer–Hub, Impeller

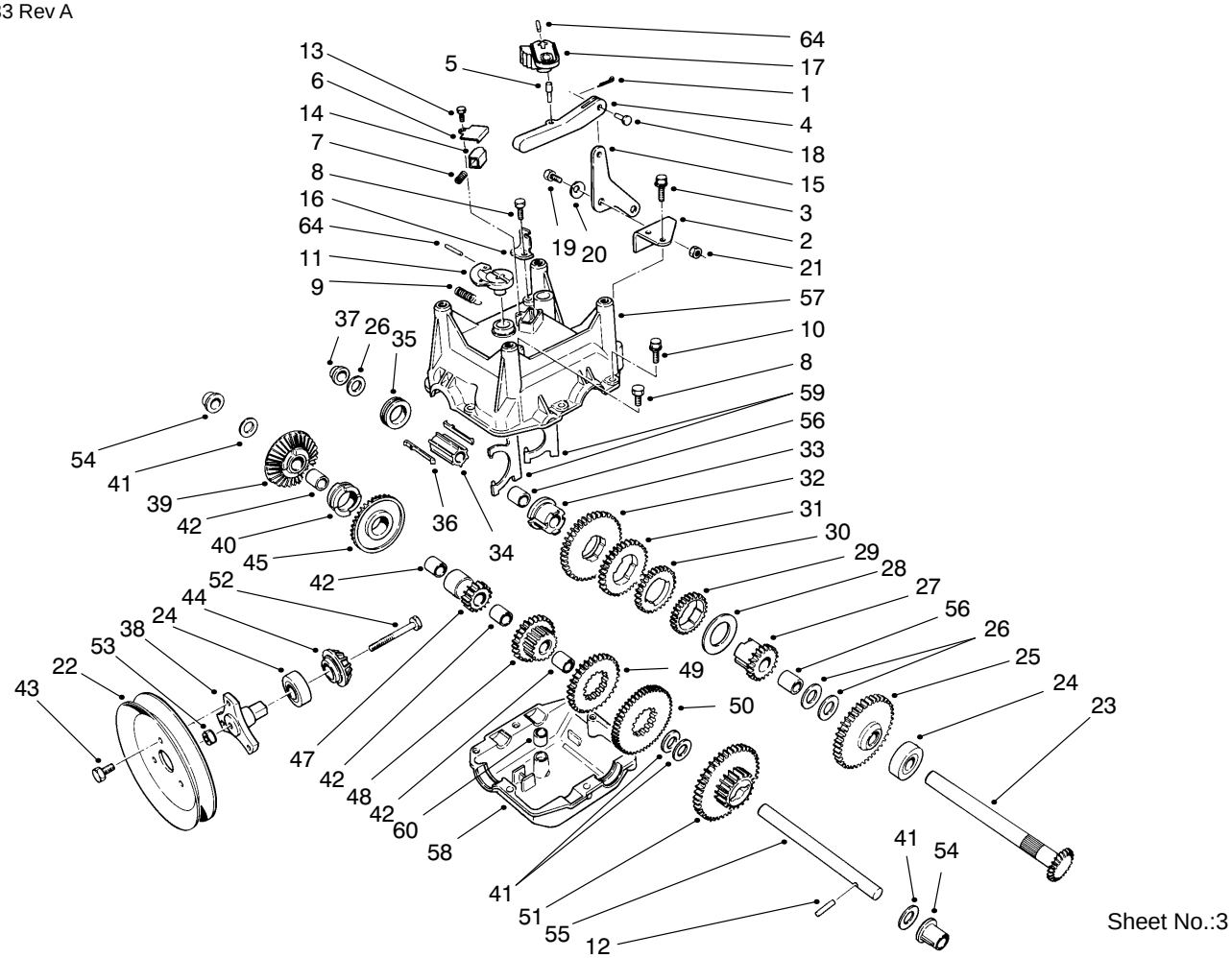

Sheet No.:3

Transmission Assembly No. 66–8030

Ref. No.	Part No.	Qty.	Description
1	3272–1	1	Pin–Cotter
2	62–1190	1	Bracket–Bellcrank
3	32104–95	2	Screw–HWH
4	62–0860	1	Link–Shift, Gear
5	63–2190	1	Pin–Link, Gear Shift
6	62–1690	1	Cover–Detent
7	63–2890	1	Spring–Detent
8	32144–4	2	Screw–HH
9	63–2920	1	Spring–Extension
10	32144–86	6	Screw–HH
11	62–0880	1	Lever
12	32121–106	1	Pin–Spring
13	32104–71	1	Screw–HWH
14	62–1020	1	Button–Detent
15	63–2600	1	Bellcrank
16	62–1740	1	Bracket–Cable, F/R
17	62–0870	1	Lever–Shift, Gear
18	283–3	1	Pin–Clevis
19	63–3410	1	Screw–Shoulder
20	3290–477	1	Washer–Curved
21	3296–42	1	Nut–Lock
22	62–1310	1	Traction–Sheave, Half
23	62–1080	1	Shaft–Output
24	38–7820	2	Bearing–Ball
25	62–0370	1	Gear, 41 T
26	252–59	3	Bearing–Thrust

Ref. No.	Part No.	Qty.	Description
27	62–0340	1	Gear–Sleeve, 19 T
28	63–2280	1	Washer–Thrust
29	62–0250	1	Gear, 29 T
30	62–0200	1	Gear, 27 T
31	62–0220	1	Gear, 34 T
32	62–0240	1	Gear, 45 T
33	62–0320	1	Sleeve–Gear
34	68–4320	1	Sleeve–Shift
35	62–0430	1	Collar–Shift
36	62–0310	2	Key
37	62–1180	1	Bushing–Flange, Output
38	62–0380	1	Hub–Pulley
39	13–3559	1	Gear–Bevel, Rev, 36 T
40	67–5880	1	Collar–Shift
41	257–10	4	Washer–Thrust
42	62–1160	4	Bushing
43	12–3270	3	Screw
44	62–0350	1	Pinion–Bevel
45	67–5870	1	Bevel Gear 36 T
47	62–0500	1	Gear–Bevel, 15 T
48	68–4310	1	Gear, 26 T
49	62–0210	1	Gear, 33 T
50	62–0260	1	Gear, 51 T
51	62–0360	1	Gear, 19/41 T
52	321–15	1	Screw–HH

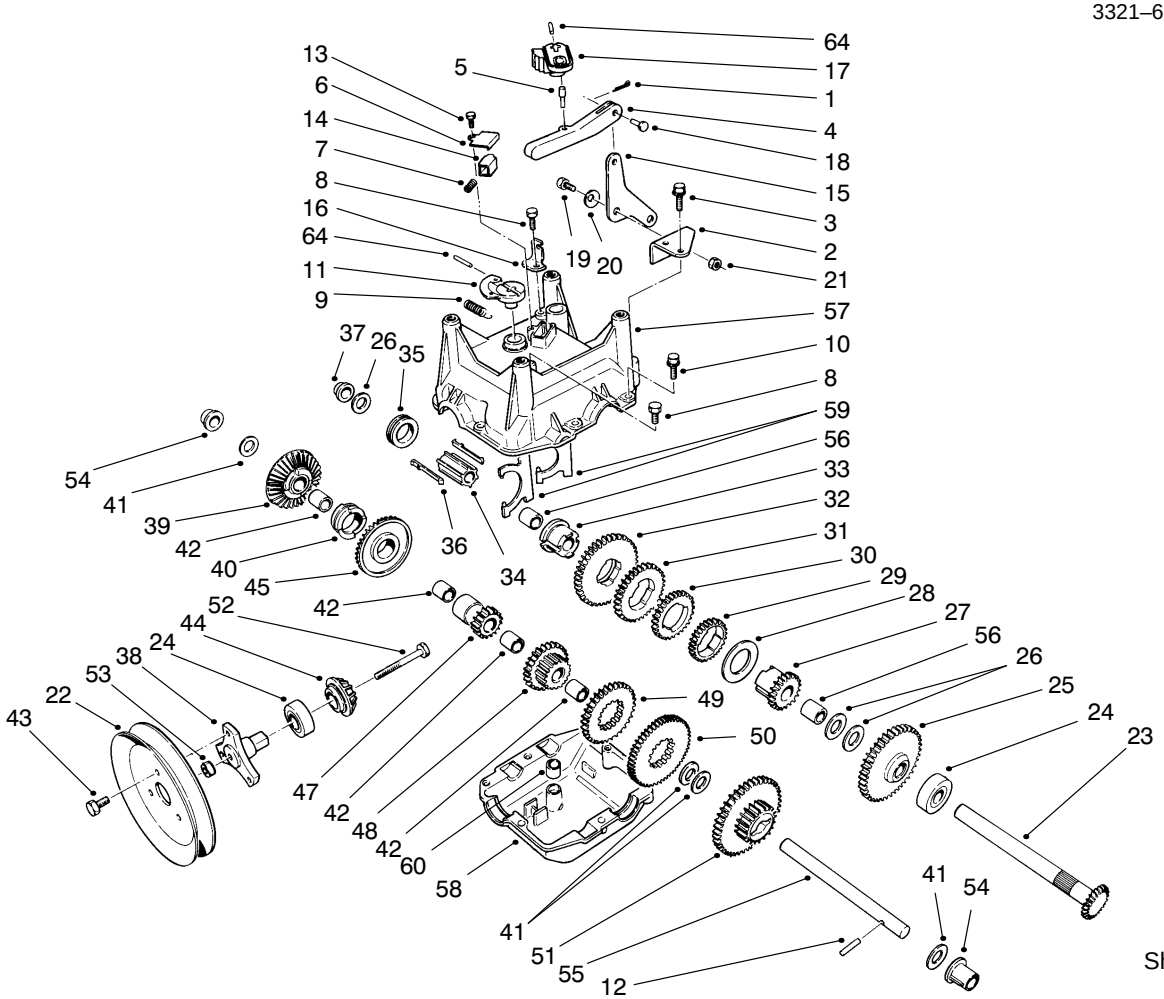

Sheet No.:3

Transmission Assembly No. 66–8030 (cont.)

Ref. No.	Part No.	Qty.	Description
53	32128–32	1	Nut–Hex, Flange
54	62–1170	2	Bushing–Intermediate
55	62–0330	1	Shaft–Intermediate
56	62–1350	2	Bushing–Output
57	62–0490	1	Gearcase–Upper, Casing
58	62–0480	1	Gearcase–Lower, Casing
59	62–1040	2	Yoke–Shift
60	29–9570	1	Bushing–Yoke
64	32121–120	2	Pin–Spring

Ref. No.	Part No.	Qty.	Description

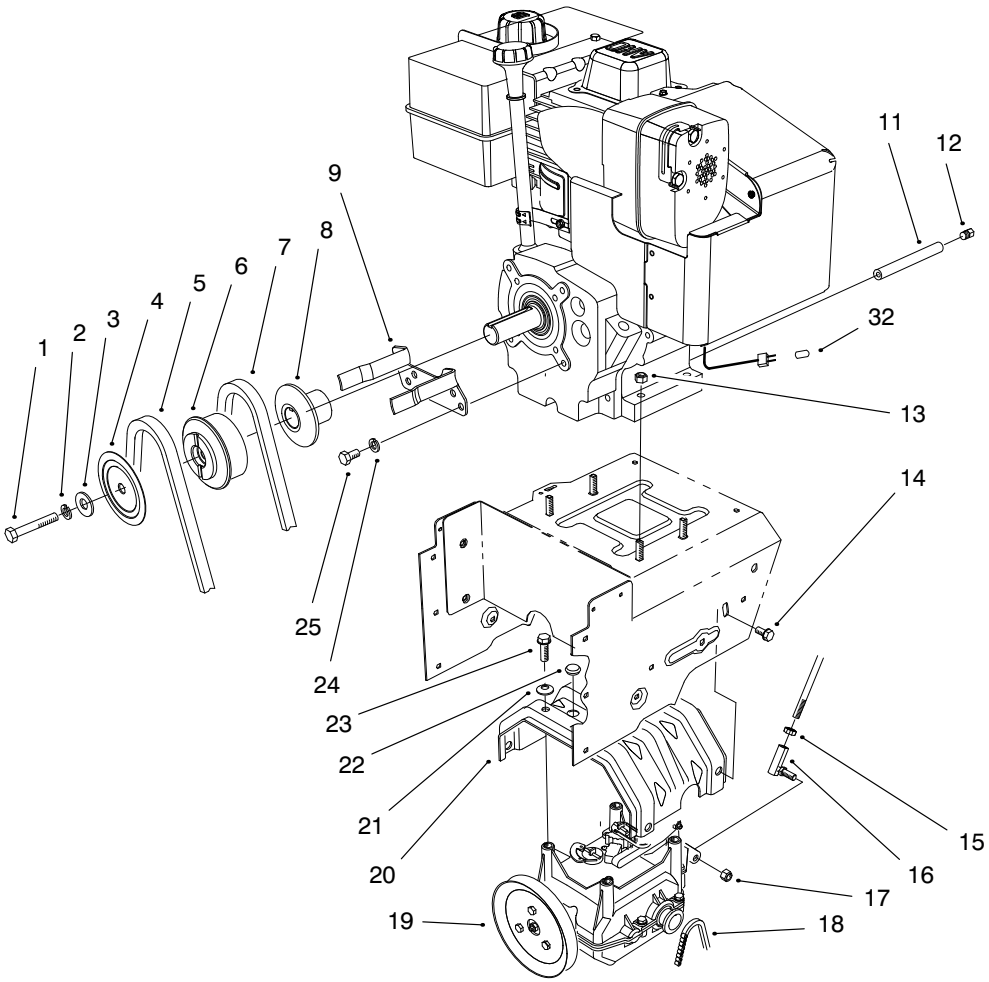

Sheet No.:4

Engine & Transmission Drive Assembly

Ref. No.	Part No.	Qty.	Description
1	3212–8	1	Screw–HH
2	3253–6	1	Washer–Lock
3	3256–41	1	Washer–Flat
4	62–0940	1	Sheave–Half, Impeller
5	63–2967	1	V Belt – Impeller
6	62–0930	1	Pulley–Engine, Center
7	63–2955	1	Traction Belt
8	62–0920	1	Sheave–Half,Traction
9	68–7510–03	1	Belt Guide ASM, Welded
11	289–34	1	Nipple–Pipe
12	288–2	1	Cap–Pipe
13	32128–20	4	Nut–Hex, Flange
14	3234–7	4	Screw–HHF
15	3220–3	1	Nut–Jam
16	78–2920	1	Ball–Joint
17	3296–6	1	Nut–Lock
18	63–2930	1	Chain
19	66–8030	1	Traction Gearcase ASM
20	63–2990–03	1	Transmission Frame
21	3290–461	4	Washer–belleville
22	95–7947	2	Cap–Plug
23	11–0590	4	Screw–Thr’d Form
24	3253–4	2	Washer–Lock
25	3210–1	2	Screw–Cap

Ref. No.	Part No.	Qty.	Description
32	94–2782	1	Cap–Lite Wire (Model 38590)

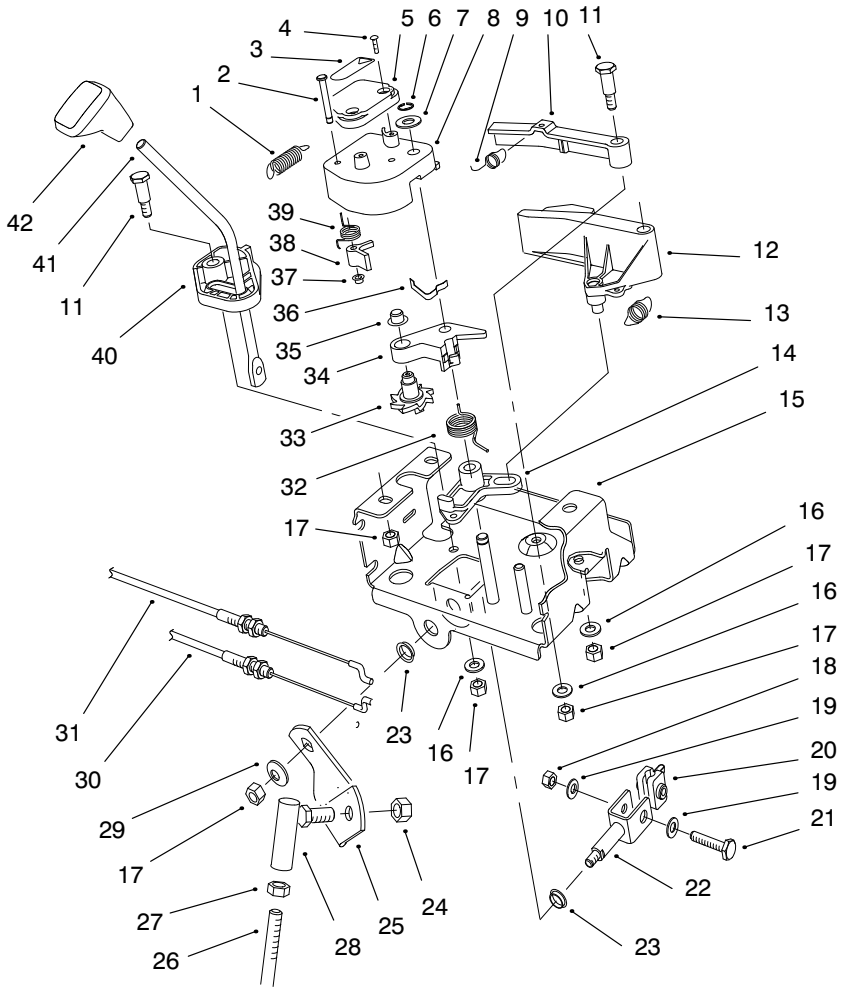

Sheet No.:5

Traction Linkage Assembly

Ref. No.	Part No.	Qty.	Description
1	63–2220	1	Extension Spring
2	63–2610	1	Pin–Tang
3	63–2480	1	Decal–No. 2
4	94–6961	2	Screw
5	62–1140	1	Cover–Latch
6	32120–46	1	Ring–Retaining
7	257–9	1	Washer–Thrust
8	62–1100	1	Lever Latch
9	63–2240	1	Spring–Extension
10	62–1700	1	Lever–Lockout
11	63–2650	2	Screw–Shoulder
12	62–1130	1	Lever–Reverse
13	63–2230	1	Spring–Extension
14	62–1120	1	Lever–Reverse, Switch
15	63–2150–03	1	Control Frame ASM, Welded
16	3256–23	3	Washer–Flat
17	3296–29	7	Nut–Lock
18	3296–42	1	Nut–Lock
19	3256–1	2	Washer–Flat
20	67–9250	1	Retainer–Rod, Shift
21	321–9	1	Screw–HH
22	66–7730	1	Clevis ASM, Welded
23	256–296	2	Bushing
24	3296–6	1	Nut–Lock

Ref. No.	Part No.	Qty.	Description
25	63–2630	1	Bracket–Shift
26	63–2830	1	Rod–Bent Shift, Lower
27	3220–3	1	Nut–Jam
28	78–2920	1	Ball–Joint
29	3290–456	1	Washer–Belleville
30	63–2210	1	Cable–Gearbox
31	63–2200	1	Cable–Arm, Latch
32	63–2270	1	Torsion Spring
33	62–0170	1	Wheel–Index
34	62–1110	1	Lever–Wheel, Index
35	3290–320	1	Retainer–Push On
36	62–1710	1	Spring–Flat
37	3290–422	1	Nut–Push
38	62–0180	1	Tang–Index
39	62–1650	1	Spring–Torsion
40	62–1470	1	Base–Lockout
41	67–9240	1	Rod–Shift
42	62–1290	1	Knob–Shift

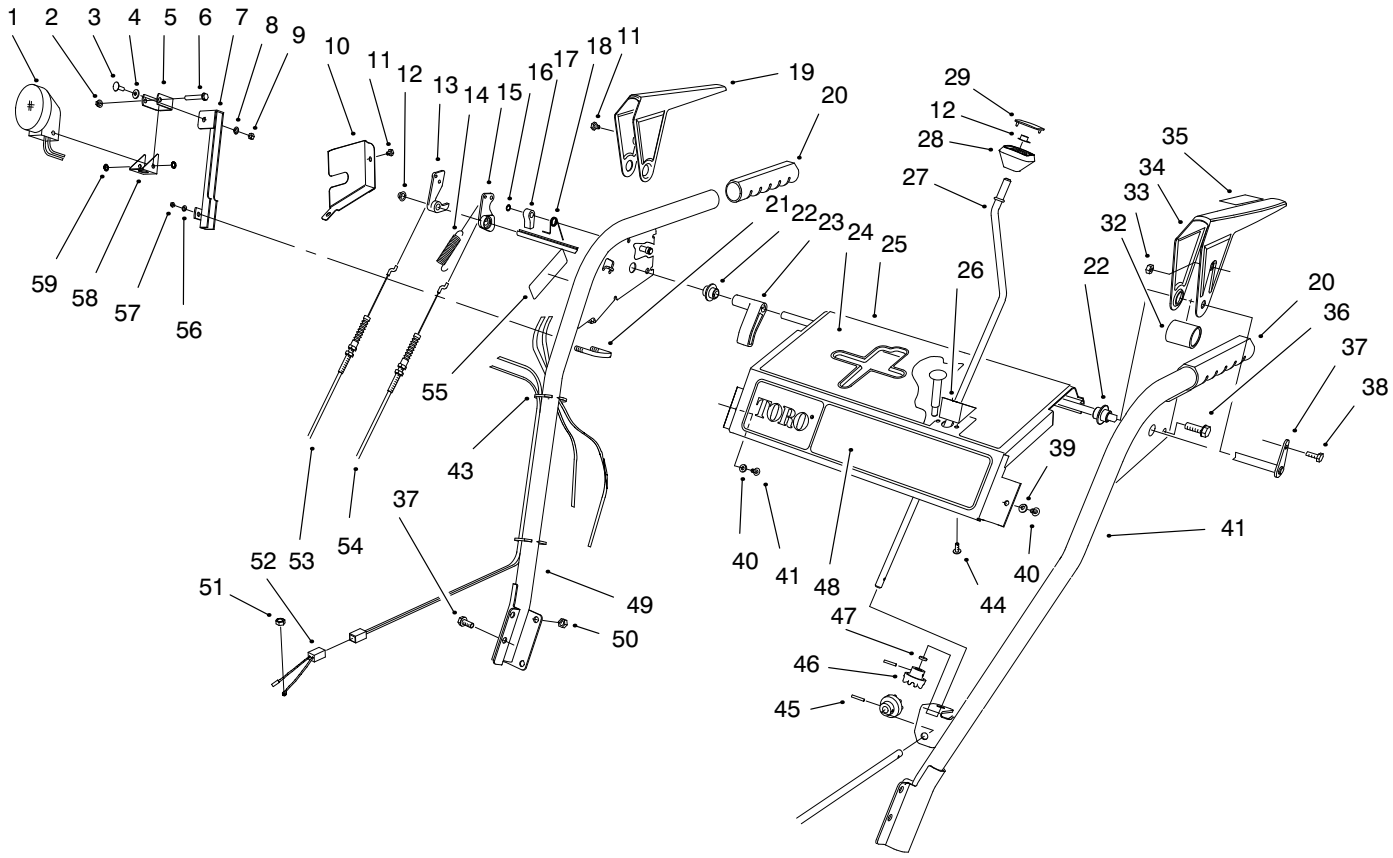

Sheet No.:6

Handle Assembly

Ref. No.	Part No.	Qty.	Description
1	54–9871	1	Headlamp ASM (Model 38591)
2	32128–35		Nut–Flange (Model 38591)
3	3231–2	1	Bolt–carriage (Model 38591)
4	3256–26	1	Washer–Flat (Model 38591)
5	218–556	1	Bracket (Model 38591)
6	322–13	1	Screw–Hex Hd (Model 38591)
7	68–7110–03		Mount–Light (Model 38591)
8	3253–21	1	Washer–lock (Model 38591
9	3217–7	1	Nut–Hex (Model 38591)
10	63–2170–03	1	Cover–Lock, Lever
11	2210–250	3	Screw–HH
12	3290–320	2	Retainer–Push On
13	62–0300	1	Tang–Locking
14	88–0810	1	Spring–Extension
15	62–0290	1	Cam–Release
16	32151–66	1	E–Ring–Retainer
17	62–0280	1	Latch–Locking
18	63–2910	1	Spring–Torsion
19	62–1050–03	1	Lever–Traction, RH
20	66–7850	2	Grip–Handle

Ref. No.	Part No.	Qty.	Description
21	68–7140	1	U–Bolt (Model 38591)
22	62–1070	2	Bushing–Lever
23	62–1640	1	Lever–Trip
24	99–3230	1	Decal–Top, Panel (Model 38590)
24	99–3229	1	Decal –Control (Model 38591)
25	99–5972	1	Control Plate ASM, Welded (Model 38590)
25	99–5973	1	Control Plate ASM, Welded (Model 38591)
26	62–1490	1	Plate–Guide
27	63–2160	1	Crank–Rod, Chute
28	62–1320	1	Knob–Control, Chute
29	62–1520	1	Cover–Knob
32	63–3380	1	Spacer–Lever, Traction
33	3296–2	1	Nut–Lock
34	62–1060–03	1	Lever–Traction, LH
35	63–3050	1	Decal–Lever (Model 38590)
36	32144–14	6	Screw–HWH]
37	63–2030	1	Cross Rod ASM, Welded
38	3290–359	1	Screw–HWH
39	3256–14	2	Washer–Flat
40	32104–76	2	Screw–Acorn Slot

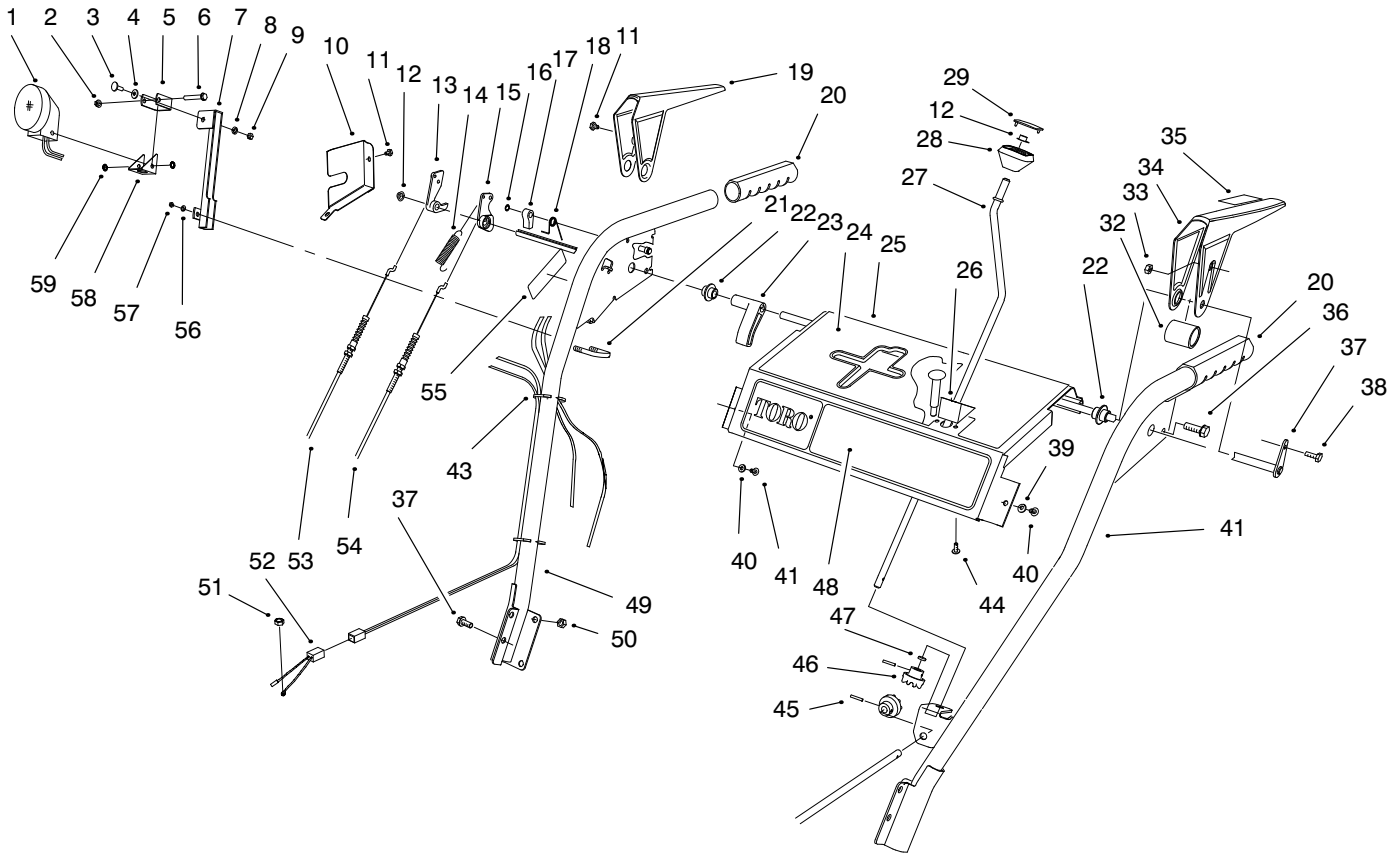

Sheet No.:6

Handle Assembly (cont.)

Ref. No.	Part No.	Qty.	Description
41	66–8091–03	1	LH Handle ASM, 24”–32”, Welded
43	3290–378	2	Tie–Cable
44	94–6961	2	Screw
45	32121–50	2	Pin–Spring
46	62–1460	2	Gear–Universal
47	62–1230	1	Washer–Rubber
48	93–8029	1	Decal–Control Panel (1232 P/S)
49	62–1381–03	1	RH Handle ASM, 24”–32”, Welded
50	3296–47	4	Nut–Lock
51	3217–6	1	Nut–Hex (Model 38591)
52	54–9810	1	Wire Assembly (Model 38591)
53	63–2700	1	Cable–Impeller
54	63–2710	1	Cable–Traction
55	66–6860	1	Decal–Warning (Model 38590)
55	94–2575	1	Decal–Adjustment (Model 38591)
56	3256–23	2	Washer–Flat (Model 38591)
57	3296–29	3	Nut–Lock (Model 38590)

Ref. No.	Part No.	Qty.	Description
57	3296–29	5	Nut–Lock (Model 38591)
58	218–554	1	Bracket (Model 38591)
59	3255–8	2	Washer–Lock (Model 38591)

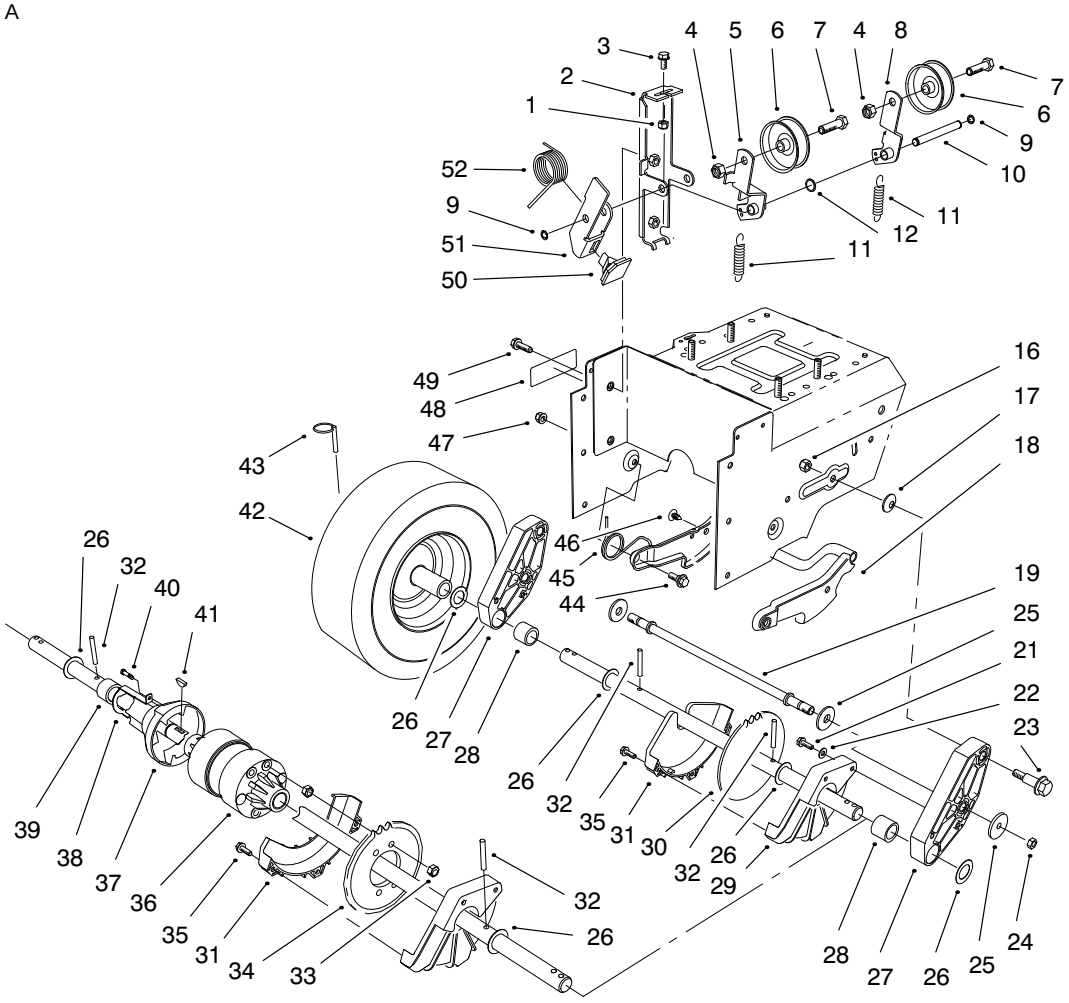

Sheet No.:7

Traction Drive Assembly

Ref. No.	Part No.	Qty.	Description
1	3296–42	1	Nut–Lock
2	63–2850	1	Idler Arm Bracket ASM, Welded
3	3234–13	1	Screw–HHF
4	3296–59	2	Nut–Lock
5	93–8046	1	Impeller Idler Arm ASM, Welded
6	3–4244	2	Pulley–Idler
7	323–7	2	Screw–HH
8	93–8045	1	Traction Idler Arm ASM, Welded
9	32120–46	2	Ring–Retaining
10	62–0970	1	Pin–Idler
11	63–2870	2	Spring–Extension
12	3256–38	1	Washer–Flat
16	3296–39	2	Nut–Lock Ni,
17	3290–461	2	Washer–Belleville
18	62–0470–03	1	Latch W A *B
19	66–7720	1	Rod–Latch
21	32144–4	2	Screw–HH
22	3256–1	2	Washer–Flat
23	62–1330	2	Bolt–Shoulder
24	3296–23	2	Nut–Lock Ni,
25	63–3340	4	Washer–Support
26	252–80	4	Bearing–Thrust
27	66–7740	2	Pivot Arm ASM

Ref. No.	Part No.	Qty.	Description
28	63–2250	2	Axle Bushing
29	62–1010	1	Guard–Chain, LH
30	63–2112	1	Axle ASM (38591)
31	68–9310	1	Chain Guard (Model 38590)
31	62–1000	1	Guard–Chain (Model 38591)
32	32121–9	2	Pin–Spring,
33	3296–47	6	Nut–Lock (Model 38590)
34	68–9270	1	32t Sprocket (Model 38590)
35	94–4496	3	Screw–Pan Hd
36	68–9200	1	Differential Assembly (Model 38590)
37	68–9250	1	Differential Coupling (Model 38590)
38	68–9260	1	Spring Locknut (Model 38590)
39	95–7930	1	Spacer (Model 38590)
40	32144–73	1	Screw (Model 38590)
41	3257–41	2	Non–Rok Key (Model 38590)
42	67–9230	2	Wheel & Tire Assembly
43	3290–243	2	Pin–Lynch
44	5–2490	2	Screw–Shoulder

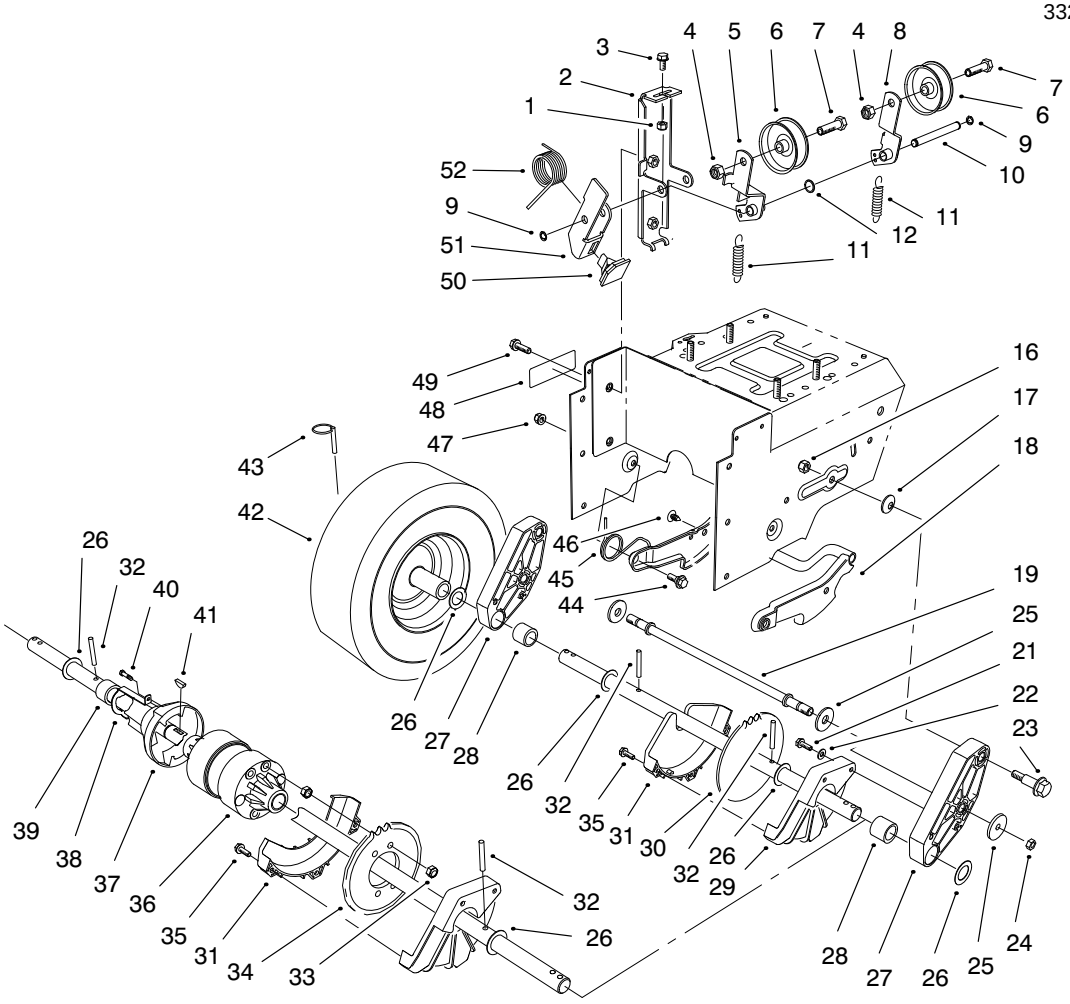

Sheet No.:7

Traction Drive Assembly (cont.)

Ref. No.	Part No.	Qty.	Description
45	63–2740	1	Spring–Latch, Torsion
46	3290–476	1	Fastener–Panel
47	3296–47	2	Nut–Lock
48	66–6860	1	Decal–Warning (Model 38590)
48	94–2575	1	Decal –Adjustment (Model 38591)
49	3234–7	2	Screw–HHF
50	66–8060	1	Pad–Brake, Molded
51	63–2820	1	Brake Arm
52	63–2882	1	Torsion Spring

Ref. No.	Part No.	Qty.	Description

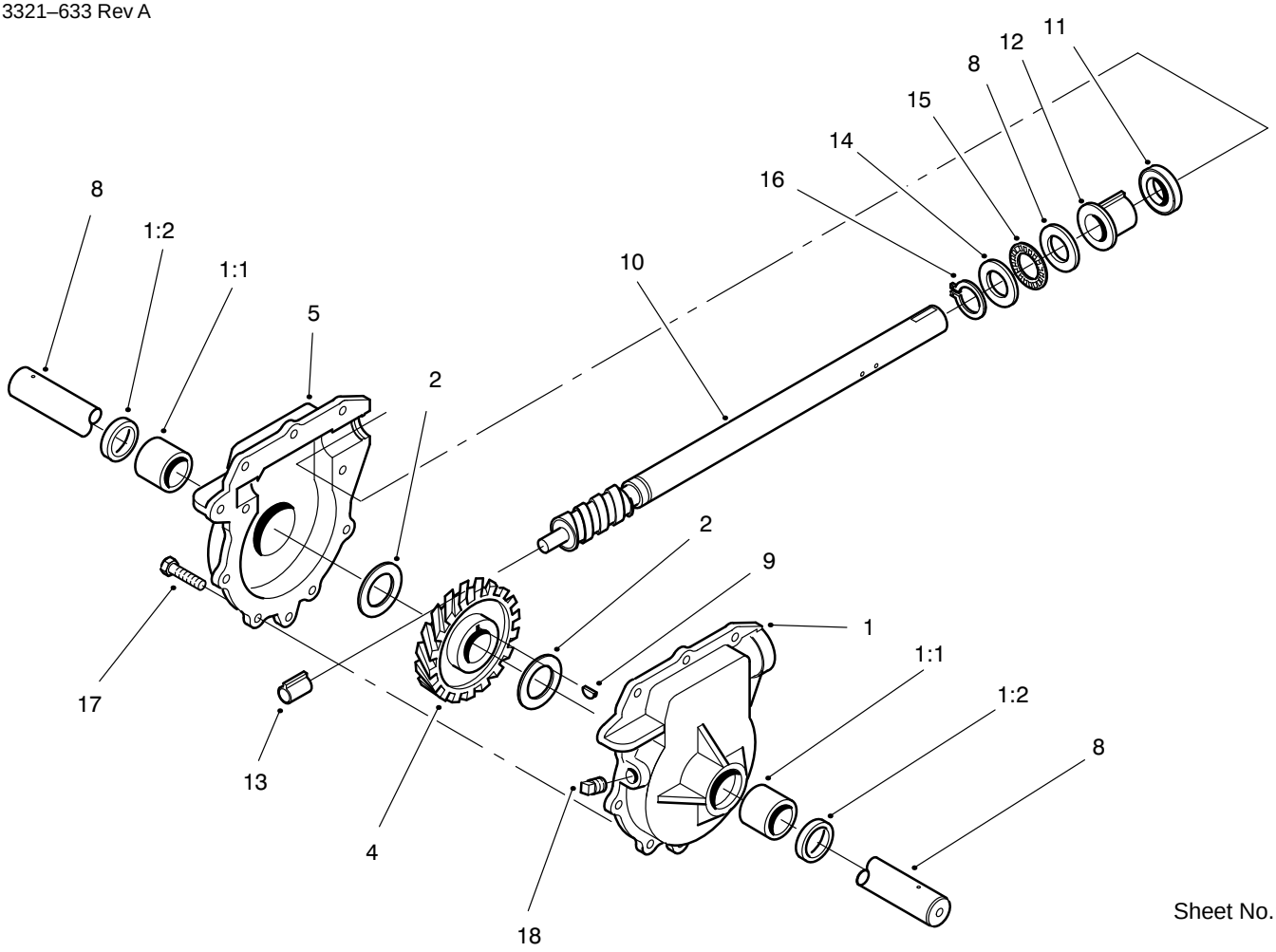

Sheet No.:8

32” Auger Gearcase Assembly No. 74–1562

Ref. No.	Part No.	Qty.	Description
1	74–1540	1	ASM–Gearcase LH
1:1	256–237	2	Bushing
1:2	7–0045	2	Seal–Oil
2	252–71	2	Washer–Thrust
4	62–0120	1	Gear–Helical
5	74–1550	1	ASM–Gearcase RH
8	62–1532	1	Shaft–Auger
9	3257–10	1	Key–Woodruff
10	66–7811	1	Shaft–Impeller
11	253–149	1	Seal–Oil
12	37–6560	1	Bushing–Input
13	62–1150	1	Bushing–Worm
14	252–78	2	Washer–Thrust
15	252–76	1	Bearing–Thrust
16	32151–33	1	Ring–Snap
17	32144–110	9	Screw–HWHTF
18	281–1	1	Plug–square Head Pipe

Ref. No.	Part No.	Qty.	Description

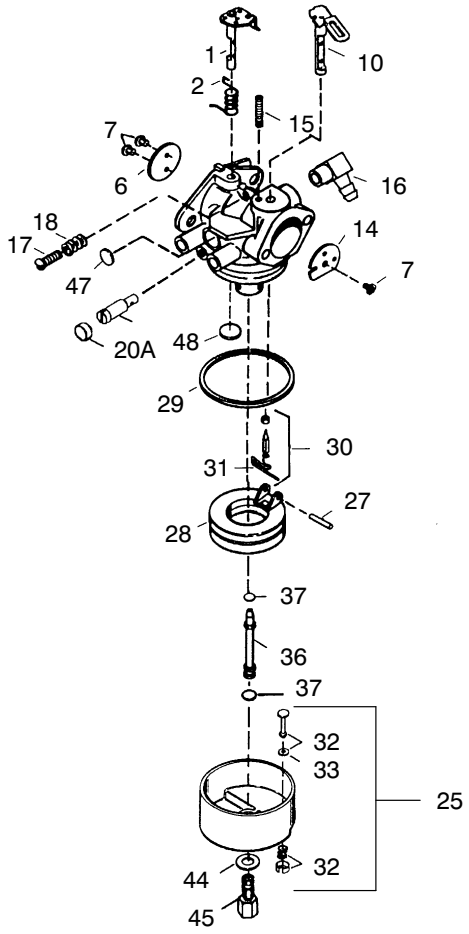

CARBURETOR NO. 640105

Ref. No.	Part No.	Description	No. Used
1	632512	Throttle Shaft & Lever Assembly	1
2	631970	Throttle Return Spring	1
6	640107	Throttle Shutter	1
7	650506	Shutter Screw	4
10	632513	Choke Shaft & Lever Assembly	1
14	632429A	Choke Shutter	1
15	630735	Choke Positioning Spring	1
16	632527	Fuel Fitting	1
17	651025	Throttle Crack Screw/ Idle Speed Screw	1
18	630766	Tension Spring	1
20	640016	Idle Restrictor Screw	1
20A	640053	Idle Restrictor Screw Cap	1
25	632594A	Float Bowl Assembly (Incl. 32 & 33)	1

Ref. No.	Part No.	Description	No. Used
27	631024	Float Shaft	1
28	632019	Float	1
29	631028	Float Bowl O−Ring	1
30	631021	Inlet Needle, Seat, & Clip (Incl. 31)	1
31	631022	Spring Clip	1
32	27136	Bowl Drain Assembly	1
33	27554	Drain Plunger Gasket	1
36	640005	Main Nozzle Tube	1
37	632547	O−Ring − Main Nozzle Tube	2
40	640106	High Speed Bowl Nut	1
44	27110	Bow Nut Washer	1
47	630748	Welch Plug − Idle Mixture Well	1
48	631027	Welch Plug − Atmospheric Vent	1

Obtain Parts From Your Local Tecumseh Dealer

Engine Tecumseh Model OHSK120−223619A (Model 38591 Only)

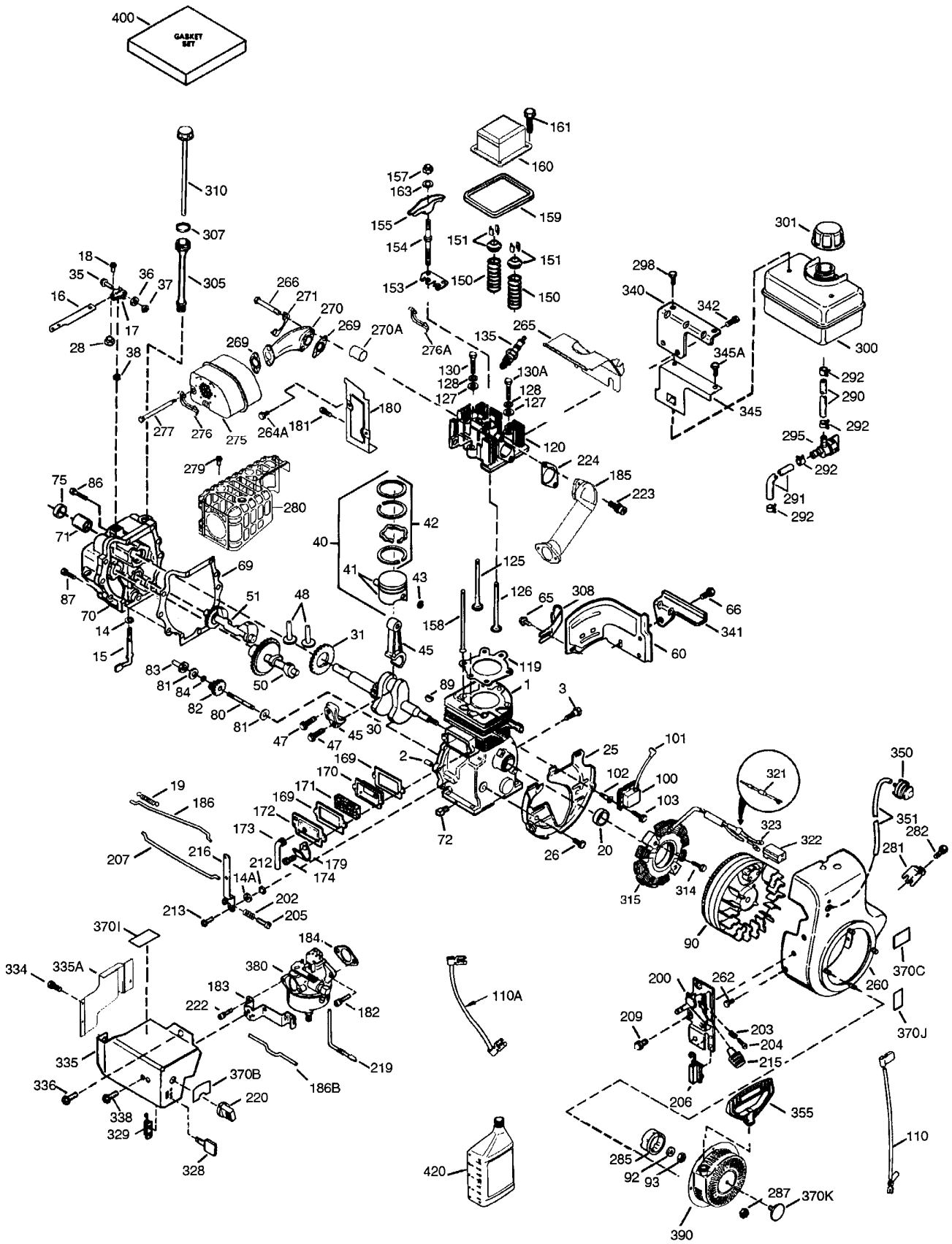

Engine Tecumseh Model OHSK120−223619A (Model 38591 Only)

Ref. No.	Part No.	Description	No. Used
1	37083	Cylinder (Incl. 2, 20, & 80)	1
2	27652	Dowel Pin	2
3	650820	Screw	2
14	28277	Washer	1
14A	28558	Washer	1
15	35685	Governor Rod (Incl. 14 & 38)	1
16	35686	Governor Lever	1
17	29916	Governor Lever Clamp	1
18	651028	Screw − Torx T−15	1
19	35688	Extension Spring	1
20	35319	Oil Seal	1
25	36460	Blower Housing Baffle	1
26	650561	Screw	2
28	30322	Locknut	1
30	36706	Crankshaft	1
31	35327	Counterbalance Gear	1
35	29826	Screw	1
36	29918	Lockwasher	1
37	29216	Locknut	1
38	29642	Retaining Ring	3
40	35776A	Piston − Pin & Ring Set (Std.)	1
40	35777A	Piston − Pin & Ring Set (.010” OS)	1
40	37778A	Piston − Pin & Ring Set (.020” OS)	1
41	35773A	Piston & Pin Ass’y (Std.) (Incl. 43)	1
41	35774A	Piston & Pin Ass’y (.010” OS) (Incl. 43)	1
41	35775A	Piston & Pin Ass’y (.020” OS) (Incl. 43)	1
42	35779	Ring Set (Std.)	1
42	35780	Ring Set (.010” OS)	1
42	35781	Ring Set (.020” OS)	1
43	35772	PIston Pin Retaining Ring	2
45	36898	Connecting Rod Ass’y (Incl. 47)	1
47	651033	Connecting Rod Bolt	2
48	35313	Valve Lifter	2
50	35682A	Camshaft (MCR)	1
51	35315A	Counterbalance Weight	1
60	35316A	Blower Housing Extension	1
65	30200	Screw	1
66	650561	Screw	1
*69	35683	Cylinder Cover Gasket	1
70	35684A	Cylinder Cover (Incl. 14, 15, 38, 71, 75)	1
71	35377	Crankshaft Bushing	1
72	27642	Oil Drain Plug	1
75	35319	Oil Seal	1
80	35751	Governor Shaft	1
81	35479	Washer	2
82	35321	Governor Gear Ass’y	1
83	35322	Governor Spool	1
84	29193	Retaining Ring	1
86	650833	Screw	7
87	650832	Screw	1
89	32589	Flywheel Key	1
90	611094	Flywheel (W/Ring Gear)	1
92	650880	Lockwasher	1
93	650881	Flywheel Nut	1
100	35135	Solid State Ignition	1
101	610118	Spark Plug Cover	1
102	651024	Solid State Mounting Stud	2
103	651007	Screw − Torx t−15	2
110	35187	Ground Wire	1
110A	36874	Ground Wire	1
*119	36932	Cylinder Head Gasket	1
120	37084	Cylinder Head	1
125	36934	Exhaust Valve (Std.)	1
125	36936	Exhaust Valve (1/32” OS)	1
126	36935	Intake Valve (Std.)	1
126	36937	Intake Valve (1/32” OS)	1
127	650691	Washer	6
128	650690	Belleville Washer	6
130	650697A	Screw	6
130A	650990	Screw − Torx T−30	1
135	34645	Spark Plug (RN4C)	1
150	33507	Valve Spring	2
151	33508	Valve Spring Keeper	2
153	35949	Push Rod Guide	1
154	650945	Rocker arm Stud	2
155	35950	Rocker arm	2
157	650947	Jam Nut	2
158	35466	Push Rod	2
*159	35952	Rocker Arm Cover Gasket	1
160	35953A	Rocker Arm Housing	1
161	30063	Screw − Torx T−30	4
163	650890	Lockwasher	2
*169	27896A	Valve Cover Gasket	2
170	28423	Breather Body	1
171	28424	Breather Element	1
172	28425	Valve Cover	1
173	35350	Breather Tube	2
174	650128	Screw	2
179	30593	Retainer Clip	1
180	35954	Blower Housing Extension	1
181	30200	Locknut	2
182	650517	Screw	2
183	34583A	Choke Bracket	1
*184	33263	Carburetor To Intake Pipe Gasket	1
185	37085	Intake Pipe	1
186	35691	Governor Link	1
186B	36653	Choke Spring	1
200	35702	Control Bracket (Incl. 203, 204, & 206)	1
202	36482	Compression Spring	1
203	31342	Compression Spring	1
204	651029	Screw − Torx T−10	1
205	651019	Screw − Torx T−10	1
206	610973	Terminal	1
207	35692	Throttle Link	1
209	650821	Screw	2
212	30773A	Bushing	1
213	650930	Screw	1
215	35440	Control Know	1
216	35679	R.P.M. Adjusting Lever	1

* Included in Gasket Set No. 36947A Ref. #400
Obtain Parts From Your Local Tecumseh Dealer

Engine Tecumseh Model OHSK120−223619A (Model 38591 Only)

Ref. No.	Part No.	Description	No. Used
219	35689	Choke Rod	1
220	35438	Choke Knob	1
222	28820	Screw	2
223	650971	Screw − Torx T−30	2
*224	33515A	Intake Pipe Gasket	1
260	35694	Blower Housing	1
262	29747B	Screw − Torx T−40	2
264A	650738	Screw	1
265	37086	Cylinder Head Cover	1
266	650876	Screw	2
*269	35762	Exhaust Gasket	2
270	35870	Exhaust Manifold	1
270A	35829A	Exhaust Port Liner	1
271	35293	Locking Plate (Manifold)	1
275	37264	Muffler	1
276	35348	Locking Plate	1
276A	31588	Locking Plate	1
277	650877	Screw	2
279	651011	Screw	1
280	37265	Heat Shield	1
281	33013	Starter Bubble Cover	1
282	650760	Screw	1
285	35985B	Starter Cup	1
287	29752	Nut & Lockwasher	4
290	29774	Fuel Line	1
291	30962	Fuel Line	1
292	26460	Fuel Line Clamp	4
295	35857	Fuel Shut−Off Valve	1
298	650665	Screw	1
300	37290	Fuel Tank (Incl. 292 & 301)	1
301	36246	Fuel Cap	1
305	35574	Oil Fill Tube	1
307	35499	O−Ring	1
308	35539	Fill Tube Clip	1
310	35700	Dipstick	1
314	650873	Screw	1
315	611104	Alternator Coil (3/5 Split) (Inc. 321−323)	1
321	611161	Diode	1
322	611142	Connector Body	1
323	611118	Terminal	2
328	35062	Key Switch	2
329	610973	Terminal	1
334	650257	Screw	2
335	35698	Carburetor Cover (Front)	1
335A	37087	Carburetor Cover (Back)	1
336	650765	Screw	1
338	650821	Screw	2
340	35696	Fuel Tank Bracket	1
341	35697	Fuel tank Bracket	1
342	792028	Screw	1
345	35699	Heat Baffle	1
345A	650876	Screw	2
350	570682A	Primer Ass'y	1
351	32180C	Primer Line	1
355	590574	Starter Handle	1
370B	36253	Control Decal	1
370C	36501	Primer Decal	1
370I	37119	Warning Decal	1
370J	35703	Throttle Decal	1
370K	36695	Starter Decal	1
380	640105	Carburetor (Incl. 184)	1
390	590749	Rewind Starter (Note: This engine could have been built with 590733 starter)	1
400	36947A	Gasket Set	1
420	730226	SAE 5W30 4−Cycle Engine Oil (Quart)	1

* Included in Gasket Set No. 36947A Ref. #400

Obtain Parts From Your Local Tecumseh Dealer

Engine Tecumseh Model OHSK120−223620A (Model 38590 Only)

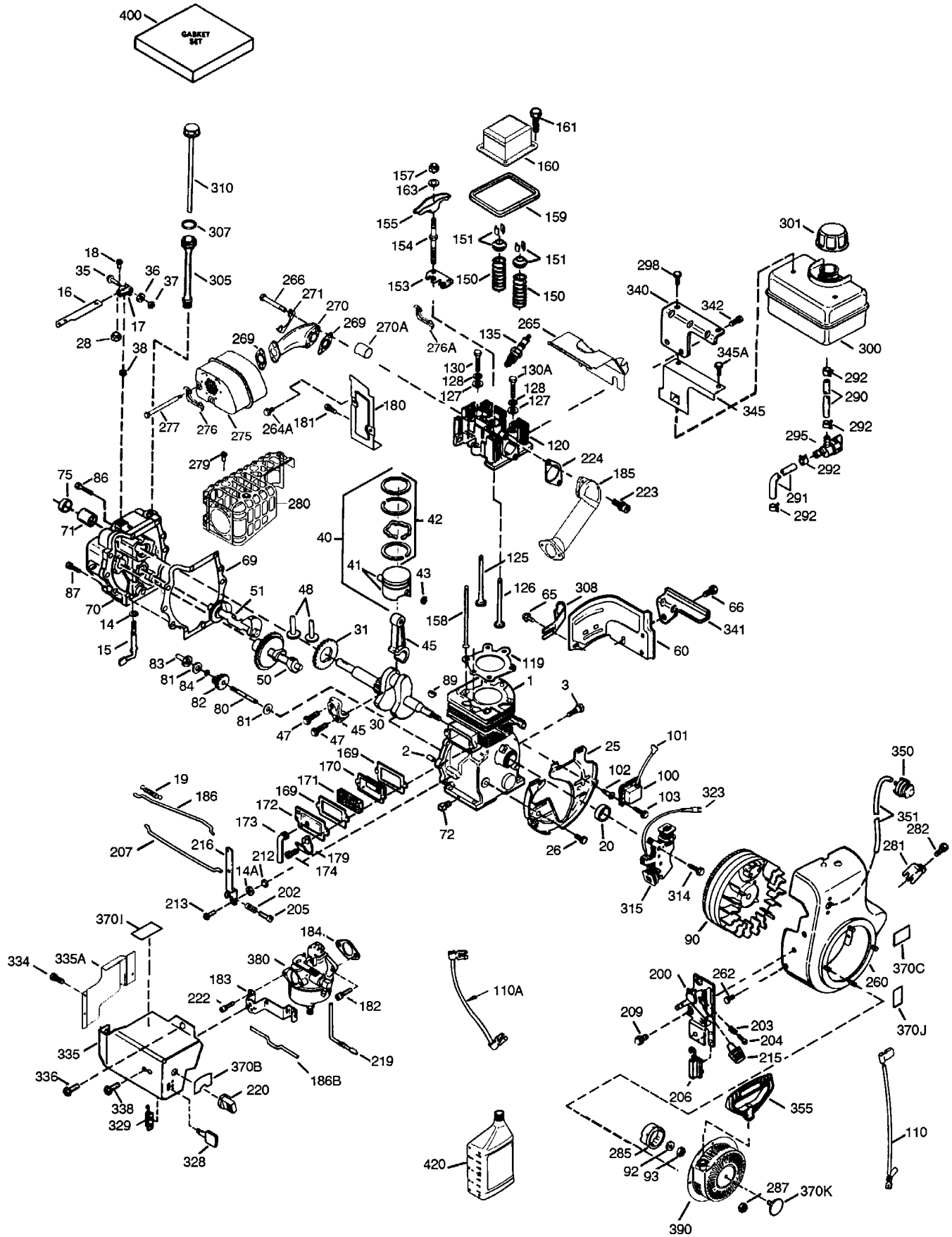

Engine Tecumseh Model OHSK120−223620A (Model 38590 Only)

Ref. No.	Part No.	Description	No. Used
1	37083	Cylinder (Incl. 2, 20, & 80)	1
2	27652	Dowel Pin	2
3	650820	Screw	2
14	28277	Washer	1
14A	28558	Washer	1
15	35685	Governor Rod (Incl. 14 & 38)	1
16	35686	Governor Lever	1
17	29916	Governor Lever Clamp	1
18	651028	Screw − Torx T−15	1
19	35688	Extension Spring	1
20	35319	Oil Seal	1
25	36460	Blower Housing Baffle	1
26	650561	Screw	2
28	30322	Locknut	1
30	36706	Crankshaft	1
31	35327	Counterbalance Gear	1
35	29826	Screw	1
36	29918	Lockwasher	1
37	29216	Locknut	1
38	29642	Retaining Ring	3
40	35776A	Piston − Pin & Ring Set (Std.)	1
40	35777A	Piston − Pin & Ring Set (.010” OS)	1
40	37778A	Piston − Pin & Ring Set (.020” OS)	1
41	35773A	Piston & Pin Ass’y (Std.) (Incl. 43)	1
41	35774A	Piston & Pin Ass’y (.010” OS) (Incl. 43)	1
41	35775A	Piston & Pin Ass’y (.020” OS) (Incl. 43)	1
42	35779	Ring Set (Std.)	1
42	35780	Ring Set (.010” OS)	1
42	35781	Ring Set (.020” OS)	1
43	35772	PIston Pin Retaining Ring	2
45	36898	Connecting Rod Ass’y (Incl. 47)	1
47	651033	Connecting Rod Bolt	2
48	35313	Valve Lifter	2
50	35682A	Camshaft (MCR)	1
51	35315A	Counterbalance Weight	1
60	35316A	Blower Housing Extension	1
65	30200	Screw	1
66	650561	Screw	1
*69	35683	Cylinder Cover Gasket	1
70	35684A	Cylinder Cover (Incl. 14, 15, 38, 71, 75)	1
71	35377	Crankshaft Bushing	1
72	27642	Oil Drain Plug	1
75	35319	Oil Seal	1
80	35751	Governor Shaft	1
81	35479	Washer	2
82	35321	Governor Gear Ass’y	1
83	35322	Governor Spool	1
84	29193	Retaining Ring	1
86	650833	Screw	7
87	650832	Screw	1
89	32589	Flywheel Key	1
90	611093	Flywheel (W/Ring Gear)	1
92	650880	Lockwasher	1
93	650881	Flywheel Nut	1
100	35135	Solid State Ignition	1
101	610118	Spark Plug Cover	1
102	651024	Solid State Mounting Stud	2
103	651007	Screw − Torx t−15	2
110	35187	Ground Wire	1
110A	36874	Ground Wire	1
*119	36932	Cylinder Head Gasket	1
120	37084	Cylinder Head	1
125	36934	Exhaust Valve (Std.)	1
125	36936	Exhaust Valve (1/32” OS)	1
126	36935	Intake Valve (Std.)	1
126	36937	Intake Valve (1/32” OS)	1
127	650691	Washer	6
128	650690	Belleville Washer	6
130	650697A	Screw	6
130A	650990	Screw − Torx T−30	1
135	34645	Spark Plug (RN4C)	1
150	33507	Valve Spring	2
151	33508	Valve Spring Keeper	2
153	35949	Push Rod Guide	1
154	650945	Rocker arm Stud	2
155	35950	Rocker arm	2
157	650947	Jam Nut	2
158	35466	Push Rod	2
*159	35952	Rocker Arm Cover Gasket	1
160	35953A	Rocker Arm Housing	1
161	30063	Screw − Torx T−30	4
163	650890	Lockwasher	2
*169	27896A	Valve Cover Gasket	2
170	28423	Breather Body	1
171	28424	Breather Element	1
172	28425	Valve Cover	1
173	35350	Breather Tube	2
174	650128	Screw	2
179	30593	Retainer Clip	1
180	35954	Blower Housing Extension	1
181	30200	Locknut	2
182	650517	Screw	2
183	34583A	Choke Bracket	1
*184	33263	Carburetor To Intake Pipe Gasket	1
185	37085	Intake Pipe	1
186	35691	Governor Link	1
186B	36653	Choke Spring	1
200	35702	Control Bracket (Incl. 203, 204, & 206)	1
202	36482	Compression Spring	1
203	31342	Compression Spring	1
204	651029	Screw − Torx T−10	1
205	651019	Screw − Torx T−10	1
206	610973	Terminal	1
207	35692	Throttle Link	1
209	650821	Screw	2
212	30773A	Bushing	1
213	650930	Screw	1
215	35440	Control Know	1
216	35679	R.P.M. Adjusting Lever	1

* Included in Gasket Set No. 36947A Ref. #400
Obtain Parts From Your Local Tecumseh Dealer

Engine Tecumseh Model OHSK120−223620A (Model 38590 Only)

Ref. No.	Part No.	Description	No. Used
219	35689	Choke Rod	1
220	35438	Choke Knob	1
222	28820	Screw	2
223	650971	Screw − Torx T−30	2
*224	33515A	Intake Pipe Gasket	1
260	35694	Blower Housing	1
262	29747B	Screw − Torx T−40	2
264A	650738	Screw	1
265	37086	Cylinder Head Cover	1
266	650876	Screw	2
*269	35762	Exhaust Gasket	2
270	37263	Exhaust Manifold	1
270A	35829A	Exhaust Port Liner	1
271	35293	Locking Plate (Manifold)	1
275	37264	Muffler	1
276	35348	Locking Plate	1
276A	31588	Locking Plate	1
277	650877	Screw	2
279	651011	Screw	1
280	37265	Heat Shield	1
281	33013	Starter Bubble Cover	1
282	650760	Screw	1
285	35985B	Starter Cup	1
287	29752	Nut & Lockwasher	4
290	29774	Fuel Line	1
291	30962	Fuel Line	1
292	26460	Fuel Line Clamp	4
295	35857	Fuel Shut−Off Valve	1
298	650665	Screw	1
300	37290	Fuel Tank (Incl. 292 & 301)	1
301	36246	Fuel Cap	1
305	35574	Oil Fill Tube	1
307	35499	O−Ring	1
308	35539	Fill Tube Clip	1
310	35700	Dipstick	1
314	650873	Screw	1
315	611101	Alternator Coil (18 watt) (Incl. 323)	1
323	611118	Terminal	2
328	35062	Key Switch	2
329	610973	Terminal	1
334	650257	Screw	2
335	35698	Carburetor Cover (Front)	1
335A	37087	Carburetor Cover (Back)	1
336	650765	Screw	1
338	650821	Screw	2
340	35696	Fuel Tank Bracket	1
341	35697	Fuel tank Bracket	1
342	792028	Screw	1
345	35699	Heat Baffle	1
345A	650876	Screw	2
350	570682A	Primer Ass'y	1
351	32180C	Primer Line	1
355	590574	Starter Handle	1
370B	36253	Control Decal	1
370C	36501	Primer Decal	1
370I	37119	Warning Decal	1
370J	35703	Throttle Decal	1
370K	36695	Starter Decal	1
380	640105	Carburetor (Incl. 184)	1
390	590749	Rewind Starter (Note: This engine could have been built with 590733 starter)	1
400	36947A	Gasket Set	1
420	730226	SAE 5W30 4−Cycle Engine Oil (Quart)	1

* Included in Gasket Set No. 36947A Ref. #400

Obtain Parts From Your Local Tecumseh Dealer

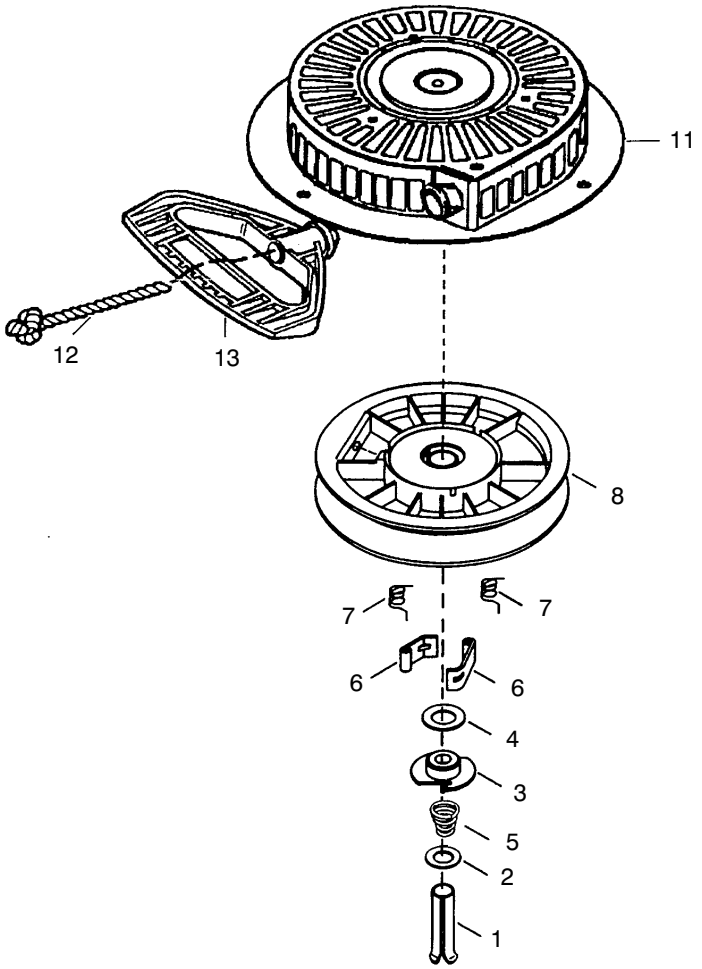

TECUMSEH STARTER NO. 590749

Ref. No.	Part No.	Description	No. Used
1	590599A	Spring Pin (Incl. Ref. #4)	1
2	590600	Washer	1
3	590679	Retainer	1
4	590601	Washer	1
5	590678	Brake Spring	1
6	590680	Starter Dog	2
7	590412	Dog Spring	2

Ref. No.	Part No.	Description	No. Used
8	590682	Pulley & Rewind Spring Assembly	1
11	590750	Starter Housing Assembly	1
12	590535	Starter Rope (Length 98” x 9/64” dia.)	1
13	590574	Mitten Grip Handle (Not included with starter)	1

Obtain Parts From Your Local Tecumseh Dealer

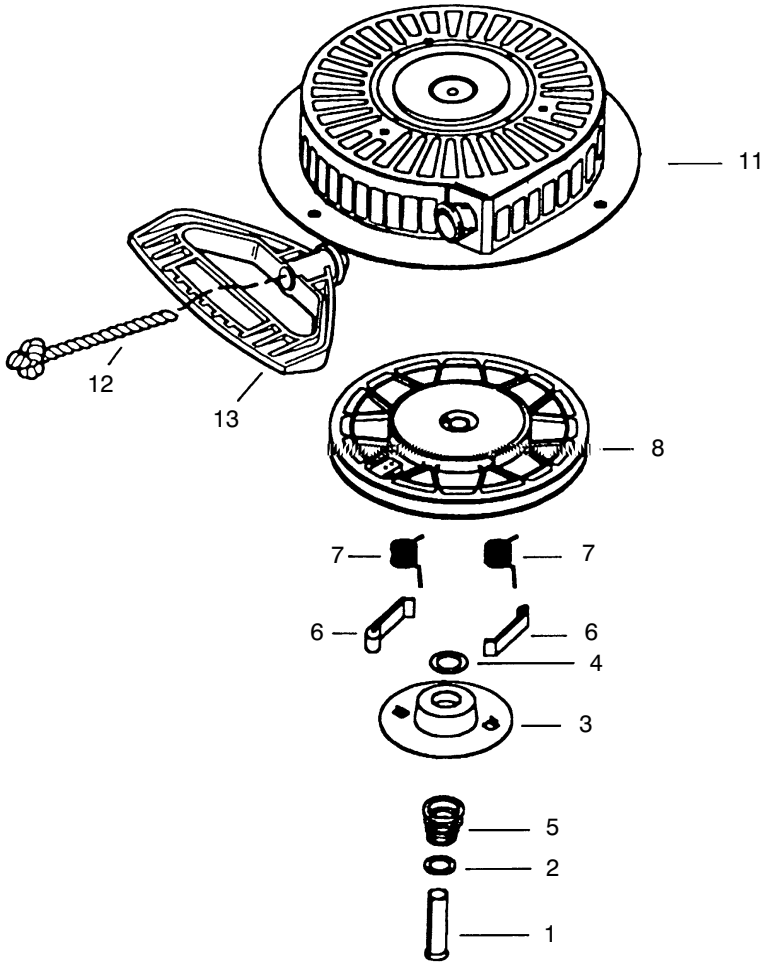

TECUMSEH STARTER NO. 590733 (OPTIONAL)

Ref. No.	Part No.	Description	No. Used
1	590599A	Pin – Spring (Incl. Ref. #4)	1
2	590600	Washer	1
3	590696	Retainer	1
4	590601	Washer	1
5	590697	Spring – Brake	1
6	590698	Dog – Starter	2
7	590699	Spring – Dog	2
8	590709	Pulley & Rewind Spring Assembly	1
11	590734	Starter Housing Assembly	1
12	590535	Rope – Starter	1
‡13	590574	Handle – Mitten Grip	1

Obtain Parts From Your Local Tecumseh Dealer
‡ Not Included In Starter Assembly

Toro Part Number Index

Part No.	Page No.	Ref. No.	Qty.	Description
3−0750	1	2	2	Washer
3−4244	9	6	2	Pulley−Idler
5−2490	9	44	2	Screw−Shoulder
7−0045	11	1:2	2	Seal−Oil
11−0590	5	23	4	Screw−Thr'd Form
12−3270	3	43	3	Screw
13−3559	3	39	1	Gear−Bevel, Rev, 36 T
20−0980	2	57	2	Bearing
20−0990	2	56	2	Flange−Bearing, Front
20−1000	2	58	2	Flange−Bearing, Rear
25−5090	2	55	1	Spacer−Hub, Auger
26−6110	1	40	1	Flange−Cup, Bearing
26−6120	1	42	1	Flange−Cup, Bearing
29−9570	4	60	1	Bushing−Yoke
37−6560	11	12	1	Bushing−Input
38−7820	3	24	2	Bearing−Ball
52−2861	2	45	4	Washer
53−7670	1	5	1	Decal−Warning Auger (Model 38590)
54−9810	8	52	1	Wire Assembly (Model 38591)
54−9871	7	1	1	Headlamp ASM (Model 38591)
62−0120	11	4	1	Gear−Helical
62−0170	6	33	1	Wheel−Index
62−0180	6	38	1	Tang−Index
62−0200	3	30	1	Gear, 27 T
62−0210	3	49	1	Gear, 33 T
62−0220	3	31	1	Gear, 34 T
62−0240	3	32	1	Gear, 45 T
62−0250	3	29	1	Gear, 29 T
62−0260	3	50	1	Gear, 51 T
62−0280	7	17	1	Latch−Locking
62−0290	7	15	1	Cam−Release
62−0300	7	13	1	Tang−Locking
62−0310	3	36	2	Key
62−0320	3	33	1	Sleeve−Gear
62−0330	4	55	1	Shaft−Intermediate
62−0340	3	27	1	Gear−Sleeve, 19 T
62−0350	3	44	1	Pinion−Bevel
62−0360	3	51	1	Gear, 19/41 T
62−0370	3	25	1	Gear, 41 T
62−0380	3	38	1	Hub−Pulley
62−0430	3	35	1	Collar−Shift
62−0470−03	9	18	1	Latch W A *B
62−0480	4	58	1	Gearcase−Lower, Casing
62−0490	4	57	1	Gearcase−Upper, Casing
62−0500	3	47	1	Gear−Bevel, 15 T
62−0722−01	1	6	1	32" Housing Wa (Red)
62−0820	1	22	1	Gear−Worm
62−0840−03	1	19	1	Chute ASM, Welded
62−0860	3	4	1	Link−Shift, Gear
62−0870	3	17	1	Lever−Shift, Gear
62−0880	3	11	1	Lever
62−0920	5	8	1	Sheave−Half,Traction
62−0930	5	6	1	Pulley−Engine, Center
62−0940	5	4	1	Sheave−Half, Impeller
62−0970	9	10	1	Pin−Idler
62−1000	9	31	1	Guard−Chain (Model 38591)
62−1010	9	29	1	Guard−Chain, LH
62−1020	3	14	1	Button−Detent
62−1040	4	59	2	Yoke−Shift
62−1050−03	7	19	1	Lever−Traction, RH
62−1060−03	7	34	1	Lever−Traction, LH
62−1070	7	22	2	Bushing−Lever
62−1080	3	23	1	Shaft−Output
62−1100	6	8	1	Lever Latch

*Not Illustrated

Toro Part Number Index (cont.)

Part No.	Page No.	Ref. No.	Qty.	Description
62–1110	6	34	1	Lever–Wheel, Index
62–1120	6	14	1	Lever–Reverse, Switch
62–1130	6	12	1	Lever–Reverse
62–1140	6	5	1	Cover–Latch
62–1150	11	13	1	Bushing–Worm
62–1160	3	42	4	Bushing
62–1170	4	54	2	Bushing–Intermediate
62–1180	3	37	1	Bushing–Flange, Output
62–1190	3	2	1	Bracket–Bellcrank
62–1230	8	47	1	Washer–Rubber
62–1290	6	42	1	Knob–Shift
62–1300	1	25	1	Pulley–Impeller
62–1310	3	22	1	Traction–Sheave, Half
62–1320	7	28	1	Knob–Control, Chute
62–1330	9	23	2	Bolt–Shoulder
62–1350	4	56	2	Bushing–Output
62–1381–03	8	49	1	RH Handle ASM, 24”–32”, Welded
62–1430	1	11	3	Retainer–Chute
62–1440–01	1	34	1	Cover–Frame, Engine
62–1460	8	46	2	Gear–Universal
62–1470	6	40	1	Base–Lockout
62–1490	7	26	1	Plate–Guide
62–1520	7	29	1	Cover–Knob
62–1532	11	8	1	Shaft–Auger
62–1640	7	23	1	Lever–Trip
62–1650	6	39	1	Spring–Torsion
62–1690	3	6	1	Cover–Detent
62–1700	6	10	1	Lever–Lockout
62–1710	6	36	1	Spring–Flat
62–1720	1	23	1	Rod–Chute, Lower
62–1740	3	16	1	Bracket–Cable, F/R
63–2030	7	37	1	Cross Rod ASM, Welded
63–2080	1	30	1	Cover–Belt, Upper
63–2112	9	30	1	Axle ASM (38591)
63–2150–03	6	15	1	Control Frame ASM, Welded
63–2160	7	27	1	Crank–Rod, Chute
63–2170–03	7	10	1	Cover–Lock, Lever
63–2190	3	5	1	Pin–Link, Gear Shift
63–2200	6	31	1	Cable–Arm, Latch
63–2210	6	30	1	Cable–Gearbox
63–2220	6	1	1	Extension Spring
63–2230	6	13	1	Spring–Extension
63–2240	6	9	1	Spring–Extension
63–2250	9	28	2	Axle Bushing
63–2270	6	32	1	Torsion Spring
63–2280	3	28	1	Washer–Thrust
63–2300	1	27	1	Retainer–Cable
63–2480	6	3	1	Decal–No. 2
63–2600	3	15	1	Bellcrank
63–2610	6	2	1	Pin–Tang
63–2630	6	25	1	Bracket–Shift
63–2650	6	11	2	Screw–Shoulder
63–2670	1	10	3	Plate–Retainer, Chute
63–2700	8	53	1	Cable–Impeller
63–2710	8	54	1	Cable–Traction
63–2740	10	45	1	Spring–Latch, Torsion
63–2820	10	51	1	Brake Arm
63–2830	6	26	1	Rod–Bent Shift, Lower
63–2850	9	2	1	Idler Arm Bracket ASM, Welded
63–2870	9	11	2	Spring–Extension
63–2882	10	52	1	Torsion Spring
63–2890	3	7	1	Spring–Detent
63–2900	1	17	2	Washer–Plastic
63–2910	7	18	1	Spring–Torsion

*Not Illustrated

Toro Part Number Index (cont.)

Part No.	Page No.	Ref. No.	Qty.	Description
63−2920	3	9	1	Spring−Extension
63−2930	5	18	1	Chain
63−2955	5	7	1	Traction Belt
63−2967	5	5	1	V Belt − Impeller
63−2990−03	5	20	1	Transmission Frame
63−3020	1	14	1	Guard−Chute
63−3050	7	35	1	Decal−Lever (Model 38590)
63−3130	1	12	1	Clip−Guard Chute
63−3290	1	29	1	Cover−Cable
63−3340	9	25	4	Washer−Support
63−3380	7	32	1	Spacer−Lever, Traction
63−3410	3	19	1	Screw−Shoulder
63−3450	1	41	1	Bearing−Ball
66−6860	8	55	1	Decal−Warning (Model 38590)
66−6860	10	48	1	Decal−Warning (Model 38590)
66−6980−01	1	32	1	Engine Frame ASM, Welded
66−7720	9	19	1	Rod−Latch
66−7730	6	22	1	Clevis ASM, Welded
66−7740	9	27	2	Pivot Arm ASM
66−7760−01	2	48	1	Scraper Blade Wa (Red)
66−7811	11	10	1	Shaft−Impeller
66−7821−01	1	3	1	Plate−Side, RH
66−7831−01	2	49	1	Plate−Side, LH
66−7850	7	20	2	Grip−Handle
66−7920−03	2	51	1	4 Blade Impeller Wa (Black)
66−8010	2	63	2	Spacer−Hub, Impeller
66−8030	5	19	1	Traction Gearcase ASM
66−8060	10	50	1	Pad−Brake, Molded
66−8091−03	8	41	1	LH Handle ASM, 24”−32”, Welded
67−5870	3	45	1	Bevel Gear 36 T
67−5880	3	40	1	Collar−Shift
67−9230	9	42	2	Wheel & Tire Assembly
67−9240	6	41	1	Rod−Shift
67−9250	6	20	1	Retainer−Rod, Shift
68−4100	1	37	1	Plate ASM−Frame, RH, Welded
68−4110	1	36	1	Plate ASM−Frame, LH, Welded
68−4310	3	48	1	Gear, 26 T
68−4320	3	34	1	Sleeve−Shift
68−7110−03	7	7	1	Mount−Light (Model 38591)
68−7140	7	21	1	U−Bolt (Model 38591)
68−7452−03	2	54	1	RH Auger Wa 32” (Black)
68−7462−03	2	54	1	LH Auger Wa 32” (Black)
68−7510−03	5	9	1	Belt Guide ASM, Welded
68−8410	2	43	1	Cover−Belt, Lower
68−9200	9	36	1	Differential Assembly (Model 38590)
68−9250	9	37	1	Differential Coupling (Model 38590)
68−9260	9	38	1	Spring Locknut (Model 38590)
68−9270	9	34	1	32t Sprocket (Model 38590)
68−9310	9	31	1	Chain Guard (Model 38590)
68−9390	1	33	1	Decal (Model 38590)
74−1440−01	2	46	2	Skid ASM, Welded
74−1540	11	1	1	ASM−Gearcase LH
74−1550	11	5	1	ASM−Gearcase RH
74−1562	2	53	1	Auger Gearcase ASM
78−2920	5	16	1	Ball−Joint
78−2920	6	28	1	Ball−Joint
88−0810	7	14	1	Spring−Extension
93−8045	9	8	1	Traction Idler Arm ASM, Welded
93−8046	9	5	1	Impeller Idler Arm ASM, Welded
94−2559	1	21	1	Decal−Danger (Model 38591)
94−2568	1	5	1	Decal−Warning (Model 38591)
94−2575	10	48	1	Decal −Adjustment (Model 38591)
94−2575	8	55	1	Decal−Adjustment (Model 38591)
94−2782	5	32	1	Cap−Lite Wire (Model 38590)

*Not Illustrated

Toro Part Number Index (cont.)

Part No.	Page No.	Ref. No.	Qty.	Description
94−4496	9	35	3	Screw−Pan Hd
94−6961	6	4	2	Screw
94−6961	8	44	2	Screw
94−8079	1	21	1	Decal−Danger, Discharge (Model 38590)
95−7930	9	39	1	Spacer (Model 38590)
95−7947	5	22	2	Cap−Plug
99−3229	7	24	1	Decal −Control (Model 38591)
99−3230	7	24	1	Decal−Top, Panel (Model 38590)
99−5972	7	25	1	Control Plate ASM, Welded (Model 38590)
99−5973	7	25	1	Control Plate ASM, Welded (Model 38591)
99−8029	8	48	1	Decal−Control Panel (1232 P/S)
218−554	8	58	1	Bracket (Model 38591)
218−556	7	5	1	Bracket (Model 38591)
2210−250	7	11	3	Screw−HH
252−59	3	26	3	Bearing−Thrust
252−71	11	2	2	Washer−Thrust
252−76	11	15	1	Bearing−Thrust
252−78	11	14	2	Washer−Thrust
252−80	1	39	1	Bearing−Thrust
252−80	9	26	4	Bearing−Thrust
253−149	11	11	1	Seal−Oil
256−237	11	1:1	2	Bushing
256−296	6	23	2	Bushing
257−9	6	7	1	Washer−Thrust
257−10	3	41	4	Washer−Thrust
281−1	11	18	1	Plug−square Head Pipe
283−3	3	18	1	Pin−Clevis
288−2	5	12	1	Cap−Pipe
289−34	5	11	1	Nipple−Pipe
321−3	2	60	8	Screw−HH,
321−9	6	21	1	Screw−HH
321−15	3	52	1	Screw−HH
321−44	2	62	2	Screw−HHF
322−12	2	59	2	Screw−HH,
322−13	7	6	1	Screw−Hex Hd (Model 38591)
323−4	1	1	2	Screw−HH
323−7	9	7	2	Screw−HH
3210−1	5	25	2	Screw−Cap
3212−8	5	1	1	Screw−HH
3217−6	8	51	1	Nut−Hex (Model 38591)
3217−7	7	9	1	Nut−Hex (Model 38591)
3220−3	5	15	1	Nut−Jam
3220−3	6	27	1	Nut−Jam]
3230−2	1	8	1	Screw−CARR
3230−23	2	50	11	Screw−CARR
3234−5	2	47	4	Screw−HHF
3234−7	5	14	4	Screw−HHF
3234−7	10	49	2	Screw−HHF
3234−13	9	3	1	Screw−HHF
3234−28	1	4	12	Screw−Hfh
3242−4	1	26	2	Screw−SQH
3253−4	5	24	2	Washer−Lock
3253−6	5	2	1	Washer−Lock
3255−8	8	59	2	Washer−Lock (Model 38591)
3256−1	6	19	2	Washer−Flat
3256−1	9	22	2	Washer−Flat
3256−14	1	16	1	Washer−Flat
3256−14	7	39	2	Washer−Flat
3256−23	2	44	1	Washer−Flat
3256−23	6	16	3	Washer−Flat
3256−23	8	56	2	Washer−Flat (Model 38591)
3256−26	7	4	1	Washer−Flat (Model 38591)
3256−38	9	12	1	Washer−Flat
3256−41	5	3	1	Washer−Flat

*Not Illustrated

Toro Part Number Index (cont.)

Part No.	Page No.	Ref. No.	Qty.	Description
3256−61	1	20	1	Washer−Flat
3257−10	11	9	1	Key−Woodruff
3257−23	1	24	1	Key−Woodruff
3257−41	9	41	2	Non−Rok Key (Model 38590)
3269−23	1	31	4	Rivet−Pop
3272−1	3	1	1	Pin−Cotter
3274−13	1	13	3	Screw−HSH
3290−243	9	43	2	Pin−Lynch
3290−320	6	35	1	Retainer−Push On
3290−320	7	12	2	Retainer−Push On
3290−326	1	15	2	Nut−Push
3290−359	7	38	1	Screw−HWH
3290−378	8	43	2	Tie−Cable
3290−422	6	37	1	Nut−Push
3290−456	6	29	1	Washer−Belleville
3290−461	9	17	2	Washer−Belleville
3290−476	10	46	1	Fastener−Panel
3290−477	3	20	1	Washer−Curved
3296−2	1	9	4	Nut−Lock
3296−2	7	33	1	Nut−Lock
3296−6	5	17	1	Nut−Lock
3296−6	6	24	1	Nut−Lock
3296−23	9	24	2	Nut−Lock Ni,
3296−29	1	38	16	Nut−Lock
3296−29	6	17	7	Nut−Lock
3296−29	8	57	3	Nut−Lock (Model 38590)
3296−29	8	57	5	Nut−Lock (Model 38591)
3296−39	9	16	2	Nut−Lock Ni,
3296−42	2	52	10	Nut−Lock
3296−42	3	21	1	Nut−Lock
3296−42	6	18	1	Nut−Lock
3296−42	9	1	1	Nut−Lock
3296−47	8	50	4	Nut−Lock
3296−47	2	61	12	Nut−Lock
3296−47	10	47	2	Nut−Lock
3296−47	9	33	6	Nut−Lock (Model 38590)
3296−59	9	4	2	Nut−Lock
32104−71	3	13	1	Screw−HWH
32104−76	7	40	2	Screw−Acorn Slot
32104−95	3	3	2	Screw−HWH
32120−46	6	6	1	Ring−Retaining
32120−46	9	9	2	Ring−Retaining
32121−9	9	32	2	Pin−Spring,
32121−50	8	45	2	Pin−Spring
32121−106	3	12	1	Pin−Spring
32121−120	4	64	2	Pin−Spring
32122−32	1	18	1	Screw
32128−20	5	13	4	Nut−Hex, Flange
32128−32	4	53	1	Nut−Hex, Flange
32128−35	7	2		Nut−Flange (Model 38591)
32144−4	1	28	6	Screw−HH
32144−4	3	8	2	Screw−HH
32144−4	9	21	2	Screw−HH
32144−14	1	35	6	Screw−HWH
32144−14	7	36	6	Screw−HWH]
32144−73	9	40	1	Screw (Model 38590)
32144−86	3	10	6	Screw−HH
32144−110	11	17	9	Screw−HWHTF
32151−33	11	16	1	Ring−Snap
32151−66	7	16	1	E−Ring−Retainer

*Not Illustrated