Form No. 3420-724 Rev A

TORO®

Count on it.

Operator's Manual

Trench Filler

Compact Tool Carrier

Model No. 22472—Serial No. 402000000 and Up

Register at www.Toro.com.
Original Instructions (EN)

CE

3420-724 A

This product complies with all relevant European directives. For details, please see the Declaration of Incorporation (DOI) at the back of this publication.

⚠ WARNING

CALIFORNIA
Proposition 65 Warning

Use of this product may cause exposure to chemicals known to the State of California to cause cancer, birth defects, or other reproductive harm.

Model No. _____

Serial No. _____

Introduction

The trench filler is an attachment designed for use on Toro compact utility loaders to fill trenches dug by a trencher with loose soil left by the trenching process.

Read this information carefully to learn how to operate and maintain your product properly and to avoid injury and product damage. You are responsible for operating the product properly and safely.

You may contact Toro directly at www.Toro.com for product safety and operation training materials, accessory information, help finding a dealer, or to register your product.

Whenever you need service, genuine Toro parts, or additional information, contact an Authorized Service Dealer or Toro Customer Service and have the model and serial numbers of your product ready. Figure 1 identifies the location of the model and serial numbers on the product. Write the numbers in the space provided.

Important: **With your mobile device, you can scan the QR code on the serial number decal (if equipped) to access warranty, parts, and other product information.**

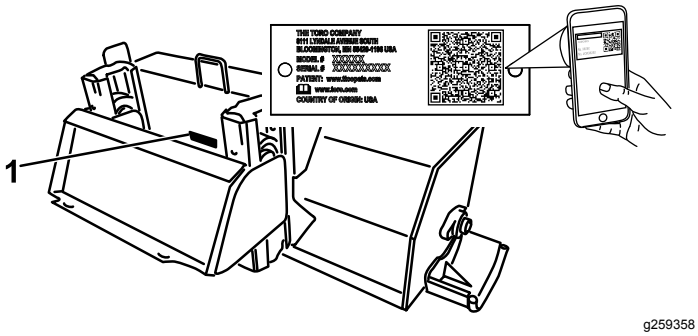

g259358

Figure 1

1. Model and serial number location

This manual identifies potential hazards and has safety messages identified by the safety-alert symbol (Figure 2), which signals a hazard that may cause serious injury or death if you do not follow the recommended precautions.



g000502

Figure 2

1. Safety-alert symbol

This manual also uses 2 words to highlight information. **Important** calls attention to special mechanical information and **Note** emphasizes general information worthy of special attention.

Contents

Safety 3
- General Safety 3
- Slope Safety 3
- Trench Filler Safety 4
- Maintenance and Storage Safety 4
- Safety and Instructional Decals 4

Product Overview 5
- Specifications 5
- Attachments/Accessories 5

Operation 5
- Installing and Removing the Attachment 5
- Filling a Trench 6
- Transporting the Attachment on a Trailer 6
- Transport Position 6
- Operating Tips 6

Maintenance 7
- Recommended Maintenance Schedule(s) 7
- Greasing the Auger Bearing 7
- Adjusting the Skids 7

Storage 8

Troubleshooting 9

© 2018—The Toro® Company

All Rights Reserved

Safety

⚠ DANGER

There may be buried utility lines in the work area. Digging into them may cause a shock or an explosion.

Have the property or work area marked for buried lines and do not dig in marked areas. Contact your local marking service or utility company to have the property marked (for example, in the US, call 811 or in Australia, call 1100 for the nationwide marking service).

General Safety

Always follow all safety instructions to avoid serious injury or death.

- Always carry the attachment close to the ground; refer to Transport Position (page 6).
- Have the property or work area marked for buried lines and other objects, and do not dig in marked areas.
- Read and understand the content of this *Operator's Manual* before starting the engine.
- Use your full attention while operating the machine. Do not engage in any activity that causes distractions; otherwise, injury or property damage may occur.
- Never allow children or untrained people to operate the machine.
- Keep your hands and feet away from the moving components and attachments.
- Do not operate the machine without the guards and other safety protective devices in place and working on the machine.
- Keep bystanders and pets a safe distance away from the machine.
- Stop the machine, shut off the engine, and remove the key before servicing, fueling, or unclogging the machine.

Improperly using or maintaining this machine can result in injury. To reduce the potential for injury, comply with these safety instructions and always pay attention to the safety-alert symbol ⚠, which means Caution, Warning, or Danger—personal safety instruction. Failure to comply with these instructions may result in personal injury or death.

You can find additional safety information where needed throughout this *Operator's Manual*.

Slope Safety

- **Operate the machine up and down slopes with the heavy end of the machine uphill.** Weight distribution changes with attachments. An empty attachment makes the rear of the machine the heavy end, and a full attachment makes the front of the machine the heavy end. Most other attachments make the front of machine the heavy end.
- **Keep the attachment in the lowered position when on slopes.** Raising the attachment on a slope affects the stability of the machine.
- Slopes are a major factor related to loss of control and tip-over accidents, which can result in severe injury or death. Operating the machine on any slope or uneven terrain requires extra caution.
- Establish your own procedures and rules for operating on slopes. These procedures must include surveying the site to determine which slopes are safe for machine operation. Always use common sense and good judgment when performing this survey.
- Slow down and use extra care on hillsides. Ground conditions can affect the stability of the machine.
- Avoid starting or stopping on a slope. If the machine loses traction, proceed slowly, straight down the slope.
- Avoid turning on slopes. If you must turn, turn slowly and keep the heavy end of the machine uphill.
- Keep all movements on slopes slow and gradual. Do not make sudden changes in speed or direction.
- If you feel uneasy operating the machine on a slope, do not do it.
- Watch for holes, ruts, or bumps, as uneven terrain could overturn the machine. Tall grass can hide obstacles.
- Use caution when operating on wet surfaces. Reduced traction could cause sliding.
- Do not operate the machine near drop-offs, ditches, embankments, or bodies of water. The machine could suddenly roll over if a wheel or track goes over the edge or the edge caves in. Maintain a safe distance between the machine and any hazard.
- Do not remove or add attachments on a slope.
- Do not park the machine on a hillside or slope.
- Do not pull a trailer on any slope.

Trench Filler Safety

- Stay in the operator's position behind the control panel while operating the trench filler.
- Do not overload the machine capacity by attempting to backfill too fast.
- Disengage power to the auger/impeller when the trench filler is transported or not in use.

Maintenance and Storage Safety

- Check fasteners at frequent intervals for proper tightness to ensure that the equipment is in safe operating condition.
- Refer to the *Operator's Manual* for important details if you store the attachment for an extended period of time
- Maintain or replace safety and instruction labels, as necessary.

Safety and Instructional Decals

Safety decals and instructions are easily visible to the operator and are located near any area of potential danger. Replace any decal that is damaged or missing.

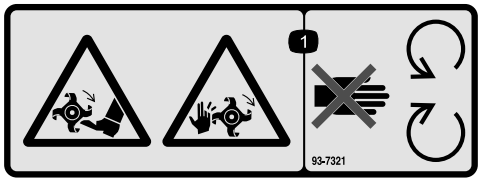

decal93-7321

93–7321

1. Cutting/dismemberment hazard of hands and feet, rotating knives—stay away from moving parts.



decal100-4652

100–4652

1. Crushing hazard of hand—keep bystanders a safe distance from the machine.
2. Crushing hazard of foot—keep bystanders a safe distance from the machine.

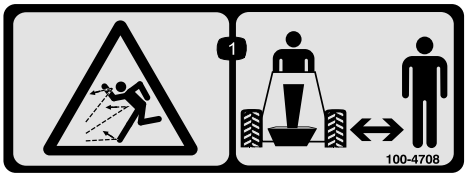

decal100-4708

100–4708

1. Thrown object hazard—keep bystanders a safe distance from the traction unit.

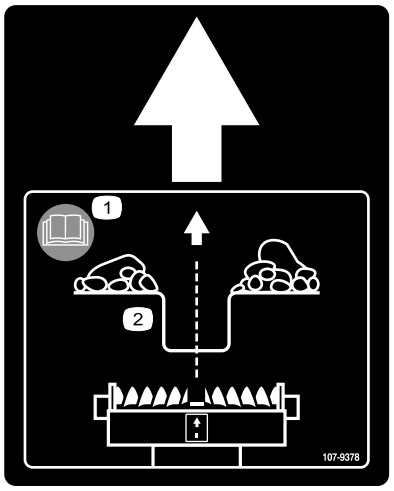

decal107-9378

107–9378

1. For more information read the *Operator's Manual*.
2. Keep the center arrow on the trench filler attachment decal centered over the trench when operating.

Product Overview

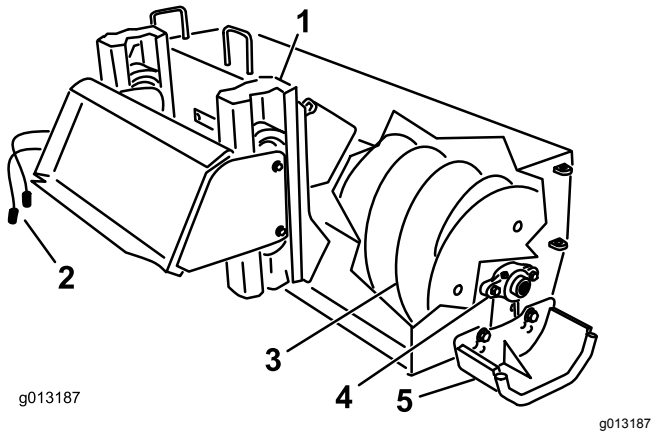

Figure 3

1. Float guide
2. Hydraulic lines
3. Auger
4. Bearing
5. Skid (2)

Specifications

Note: Specifications and design are subject to change without notice.

Width	157 cm (62 inches)
Working width	122 cm (48 inches)
Length	79 cm (31 inches)
Height	56 cm (22 inches)
Weight	186 kg (410 lb)

Attachments/Accessories

A selection of Toro approved attachments and accessories is available for use with the machine to enhance and expand its capabilities. Contact your Authorized Service Dealer or authorized Toro distributor or go to www.Toro.com for a list of all approved attachments and accessories.

To ensure optimum performance and continued safety certification of the machine, use only genuine Toro replacement parts and accessories. Replacement parts and accessories made by other manufacturers could be dangerous, and such use could void the product warranty.

Operation

Installing and Removing the Attachment

Refer to the *Operator's Manual* for the traction unit for the installation and removal procedure.

Important: **Before installing the attachment, position the machine on a level surface, ensure that the mount plates are free of any dirt or debris, and ensure that the pins rotate freely. If the pins do not rotate freely, grease them.**

Note: Always use the traction unit to lift and move the attachment.

⚠ WARNING

If you do not fully seat the quick-attach pins through the attachment mount plate, the attachment could fall off the machine, crushing you or bystanders.

Ensure that the quick-attach pins are fully seated in the attachment mount plate.

⚠ WARNING

Hydraulic fluid escaping under pressure can penetrate skin and cause injury. Fluid injected into the skin must be surgically removed within a few hours by a doctor familiar with this form of injury; otherwise, gangrene may result.

- **Ensure that all hydraulic-fluid hoses and lines are in good condition and all hydraulic connections and fittings are tight before applying pressure to the hydraulic system.**
- **Keep your body and hands away from pinhole leaks or nozzles that eject high-pressure hydraulic fluid.**
- **Use cardboard or paper to find hydraulic leaks; never use your hands.**

⚠ CAUTION

Hydraulic couplers, hydraulic lines/valves, and hydraulic fluid may be hot. If you contact hot components, you may be burned.

- **Wear gloves when operating the hydraulic couplers.**
- **Allow the machine to cool before touching hydraulic components.**
- **Do not touch hydraulic fluid spills.**

Filling a Trench

1. Start the machine.
2. Pull the auxiliary-hydraulics lever to the reference bar to engage the trench filler.
3. Slowly lower the trench filler to the ground so that the auger is just above the ground.

   Note: For best results, start with the float rollers centered in the float guide.
4. Slowly move the traction unit forward to fill the trench.

   Note: When you move too fast, the trench filler stalls. If it stalls, raise it slightly, slowly drive rearward, then resume moving forward.
5. When finished, stop the trench filler by releasing the auxiliary-hydraulics lever.

Transporting the Attachment on a Trailer

1. Place the attachment on a trailer or truck capable of carrying it.
2. Securely tie the attachment to the trailer or truck using tie straps appropriate for the weight of the attachment and for highway use.

Transport Position

When transporting the attachment, keep it as close to the ground as possible, no more than 15 cm (6 inches) above the lowest position. Tilt it rearward.

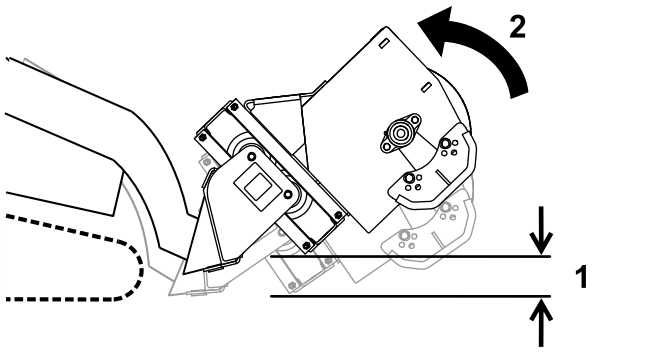

Figure 4

1. No more than 15 cm (6 inches) above the lowest position
2. Tilt the attachment rearward.

Operating Tips

- Clean the area of trash, branches, and rocks before trench filling to prevent equipment damage.
- For best trench filling, center the unit over the trench (Figure 5).

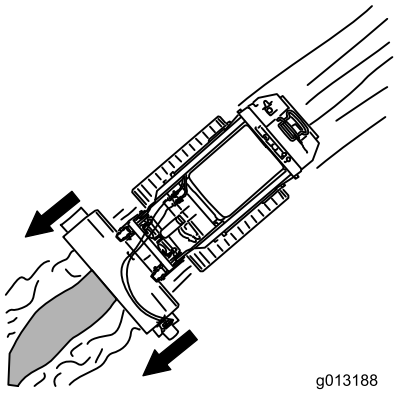

Figure 5

- Always begin trench filling with the slowest ground speed possible. Increase the speed if conditions permit.
- Always use full throttle (maximum engine speed) when trench filling.
- Never transport the trench filler with the loader arms raised.
- When trench filling, the auger should just clear the original ground surface to obtain maximum soil deposit into the trench.
- Periodically check to ensure that the rollers on the trench filler float are operating properly.
- When finished, compact the material over the trench to prepare it for grading.

Maintenance

Recommended Maintenance Schedule(s)

Maintenance Service Interval	Maintenance Procedure
Every 200 hours	• Grease the auger bearing.
Before storage	• Paint chipped surfaces.
Yearly or before storage	• Adjust the skids.

⚠ CAUTION

If you leave the key in the switch, someone could accidently start the engine and seriously injure you or other bystanders.

Remove the key from the switch before you perform any maintenance.

Greasing the Auger Bearing

Service Interval: Every 200 hours

Grease the fitting immediately after every washing.

Grease Type: General-purpose grease

1. Park the machine on a level surface, engage the parking brake, and lower the loader arms.
2. Shut off the engine and remove the key.
3. Clean the grease fitting with a rag (Figure 6).

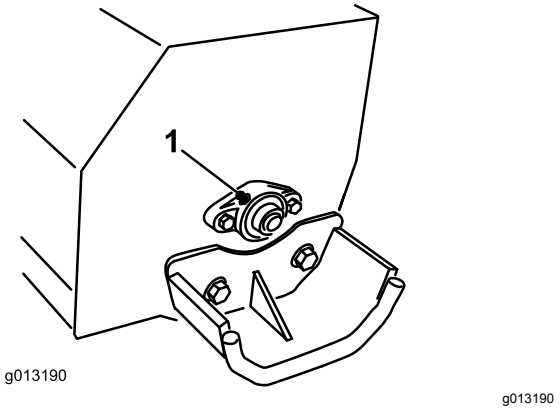

Figure 6

1. Grease fitting

4. Connect a grease gun to the fitting.
5. Pump grease into the fitting until grease begins to ooze out of the auger bearing.
6. Wipe up any excess grease.

Adjusting the Skids

Service Interval: Yearly or before storage

The distance between the auger blade and the ground is controlled by skids on each side of the housing. Adjust the height so that the auger flighting does not catch on uneven surfaces.

1. Park the machine on a level surface, engage the parking brake, and lower the attachment until it is just above the ground.
2. Shut off the engine and remove the key.
3. Remove the bolts that secure the skids to the housing (Figure 7).

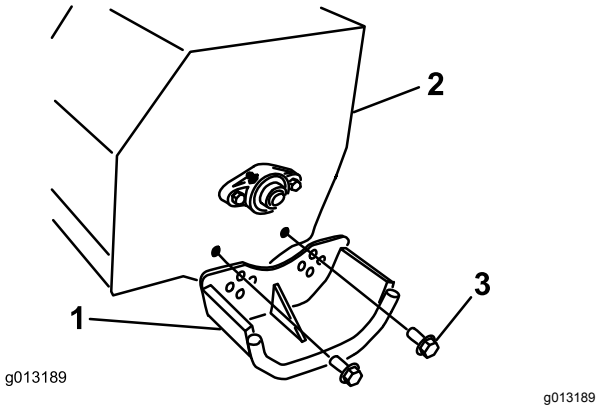

Figure 7

1. Skid
2. Housing
3. Bolts (install the bolt heads on the outside)

4. Position the skids equally on both sides and secure them with the bolts (Figure 7).

Storage

1. Before long-term storage, wash the attachment with mild detergent and water to remove dirt and grime.
2. Check the condition of the teeth. Turn or replace any worn or damaged teeth.
3. Check and tighten all bolts, nuts, and screws. Repair or replace any damaged or worn part.
4. Ensure that all hydraulic couplers are connected together to prevent contamination of the hydraulic system.
5. Paint all scratched or bare metal surfaces. Paint is available from your Authorized Service Dealer.
6. Store the attachment in a clean, dry garage or storage area. Cover it to protect it and keep it clean.

Troubleshooting

Problem	Possible Cause	Corrective Action
The attachment does not operate.	1. A hydraulic coupler is not completely connected.	1. Check and tighten all couplers.
	2. A hydraulic coupler is damaged.	2. Check the couplers and replace any that are damaged.
	3. There is an obstruction in a hydraulic hose.	3. Find and remove the obstruction.
	4. A hydraulic hose is kinked.	4. Replace the kinked hose.
	5. The auxiliary valve on the traction unit is not opening.	5. Repair the valve.

Notes:

Declaration of Incorporation

Model No.	Serial No.	Product Description	Invoice Description	General Description	Directive
22472	402000000 and Up	Trench Filler, Compact Utility Loader	TRENCH FILLER ATTACHMENT CE	Compact Utility Loader	2006/42/EC

Relevant technical documentation has been compiled as required per Part B of Annex VII of 2006/42/EC.

We will undertake to transmit, in response to requests by national authorities, relevant information on this partly completed machinery. The method of transmission shall be electronic transmittal.

This machinery shall not be put into service until incorporated into approved Toro models as indicated on the associated Declaration of Conformity and in accordance with all instructions, whereby it can be declared in conformity with all relevant Directives.

Certified:



Joe Hager
Sr. Engineering Manager
8111 Lyndale Ave. South
Bloomington, MN 55420, USA
June 26, 2018

Authorized Representative:

Marcel Dutrieux
Manager European Product Integrity
Toro Europe NV
Nijverheidsstraat 5
2260 Oevel
Belgium

Tel. +32 16 386 659

European Privacy Notice

The Information Toro Collects
Toro Warranty Company (Toro) respects your privacy. In order to process your warranty claim and contact you in the event of a product recall, we ask you to share certain personal information with us, either directly or through your local Toro company or dealer.

The Toro warranty system is hosted on servers located within the United States where privacy law may not provide the same protection as applies in your country.

BY SHARING YOUR PERSONAL INFORMATION WITH US, YOU ARE CONSENTING TO THE PROCESSING OF YOUR PERSONAL INFORMATION AS DESCRIBED IN THIS PRIVACY NOTICE.

The Way Toro Uses Information
Toro may use your personal information to process warranty claims, to contact you in the event of a product recall and for any other purpose which we tell you about. Toro may share your information with Toro's affiliates, dealers or other business partners in connection with any of these activities. We will not sell your personal information to any other company. We reserve the right to disclose personal information in order to comply with applicable laws and with requests by the appropriate authorities, to operate our systems properly or for our own protection or that of other users.

Retention of your Personal Information
We will keep your personal information as long as we need it for the purposes for which it was originally collected or for other legitimate purposes (such as regulatory compliance), or as required by applicable law.

Toro's Commitment to Security of Your Personal Information
We take reasonable precautions in order to protect the security of your personal information. We also take steps to maintain the accuracy and current status of personal information.

Access and Correction of your Personal Information
If you would like to review or correct your personal information, please contact us by email at legal@toro.com.

Australian Consumer Law

Australian customers will find details relating to the Australian Consumer Law either inside the box or at your local Toro Dealer.