Form No. 3417-925 Rev B

TORO®

Count on it.

Operator's Manual

Reelmaster® 5410-D or 5510-D Traction Unit

Model No. 03606—Serial No. 401334001 and Up

Model No. 03607—Serial No. 401334001 and Up

Register at www.Toro.com.
Original Instructions (EN)

CE

3417-925 B

This product complies with all relevant European directives. For details, please see the separate product specific Declaration of Conformity (DOC) sheet.

⚠ WARNING

CALIFORNIA
Proposition 65 Warning

This product contains a chemical or chemicals known to the State of California to cause cancer, birth defects, or reproductive harm.

Diesel engine exhaust and some of its constituents are known to the State of California to cause cancer, birth defects, and other reproductive harm.

It is a violation of California Public Resource Code Section 4442 or 4443 to use or operate the engine on any forest-covered, brush-covered, or grass-covered land unless the engine is equipped with a spark arrester, as defined in Section 4442, maintained in effective working order or the engine is constructed, equipped, and maintained for the prevention of fire.

The enclosed engine owner's manual is supplied for information regarding the US Environmental Protection Agency (EPA) and the California Emission Control Regulation of emission systems, maintenance, and warranty. Replacements may be ordered through the engine manufacturer.

Introduction

This machine is a ride-on, reel-blade lawn mower intended to be used by professional, hired operators in commercial applications. It is primarily designed for cutting grass on well-maintained lawns in golf courses, parks, sports fields, and on commercial grounds. It is not designed for cutting brush, mowing grass and other growth alongside highways, or for agricultural uses.

Read this information carefully to learn how to operate and maintain your product properly and to avoid injury and product damage. You are responsible for operating the product properly and safely.

Important: **To maximize safety, performance, and proper operation of this machine, you must carefully read and fully understand the contents of this *Operator's Manual*. Failure to follow these operating instructions or to receive proper training may result in injury. For more information on safe operating practices, including safety tips and training materials, go to www.Toro.com.**

You may contact Toro directly at www.Toro.com for product safety and operation training materials, accessory information, help finding a dealer, or to register your product.

Whenever you need service, genuine Toro parts, or additional information, contact an Authorized Service Dealer or Toro Customer Service and have the model and serial numbers of your product ready. The model and serial numbers are on a plate mounted on the left side of the frame under the foot rest. Write the numbers in the space provided.

Model No. _____

Serial No. _____

This manual identifies potential hazards and has safety messages identified by the safety-alert symbol (Figure 1), which signals a hazard that may cause serious injury or death if you do not follow the recommended precautions.

g000502

Figure 1

1. Safety-alert symbol

This manual uses 2 words to highlight information. **Important** calls attention to special mechanical information and **Note** emphasizes general information worthy of special attention.

© 2017—The Toro® Company
8111 Lyndale Avenue South
Bloomington, MN 55420

Contact us at www.Toro.com.
Printed in the USA
All Rights Reserved

Contents

Safety 4
General Safety 4
Engine Emission Certification 4
Safety and Instructional Decals 5
Setup 9
1 Adjusting the Tire Pressure 10
2 Adjusting the Control-Arm Position 10
3 Installing the Cutting Units 11
4 Adjusting the Turf-Compensation Spring 14
5 Using the Cutting-Unit Kickstand 15
6 Replacing the Warning Decal for CE Compliance 15
Product Overview 16
Controls 16
Specifications 23
Attachments/Accessories 23
Operation 24
Before Operation Safety 24
Filling the Fuel Tank 24
Checking the Engine-Oil Level 25
Checking the Cooling System 26
Checking the Hydraulic Fluid 26
Checking the Reel-to-Bedknife Contact 27
Checking the Torque of the Wheel Nuts 27
Burnishing the Brakes 27
During Operation Safety 28
Starting and Shutting off the Engine 29
Cutting Grass with the Machine 29
Diesel Particulate Filter Regeneration 30
Adjusting the Lift-Arm Counterbalance 42
Adjusting the Lift-Arm Turnaround Position 42
Pushing or Towing the Machine 43
Hauling the Machine 43
Jacking Points 44
Understanding the Diagnostic Light 44
Checking the Interlock Switches 45
After Operation Safety 46
Hauling the Machine 46
Hydraulic-Valve Solenoid Functions 46
Operating Tips 46
Maintenance 47
Recommended Maintenance Schedule(s) 47
Daily Maintenance Checklist 48
Service Interval Chart 49
Pre-Maintenance Procedures 49
Pre-Maintenance Safety 49
Lubrication 49
Greasing the Bearings and Bushings 49
Engine Maintenance 51
Engine Safety 51
Servicing the Air Cleaner 51
Servicing the Engine Oil 53
Servicing the Diesel-Oxidation Catalyst (DOC) and the Soot Filter 54
Fuel System Maintenance 55
Servicing the Water Separator 55
Servicing the Engine Fuel Filter 55
Checking the Fuel Lines and Connections 56
Fuel Pick-up Tube Screen 56
Electrical System Maintenance 56
Electrical System Safety 56
Servicing the Battery 56
Checking the Fuses 57
Drive System Maintenance 58
Adjusting the Traction Drive for Neutral 58
Adjusting the Rear Wheel Toe-in 59
Cooling System Maintenance 59
Cooling System Safety 59
Removing Debris from the Cooling System 59
Brake Maintenance 60
Adjusting the Parking Brakes 60
Adjusting the Parking-Brake Latch 61
Belt Maintenance 61
Servicing the Alternator Belt 61
Hydraulic System Maintenance 62
Hydraulic System Safety 62
Changing the Hydraulic Fluid 62
Replacing the Hydraulic Filters 63
Checking the Hydraulic Lines and Hoses 63
Hydraulic-System Test Ports 64
Cutting Unit System Maintenance 65
Cutting Unit Safety 65
Backlapping the Cutting Units 65
Storage 66
Preparing the Traction Unit 66
Preparing the Engine 66

Safety

This machine has been designed to meet or exceed EN ISO 5395:2013 (when appropriate decals are applied) and ANSI B71.4-2017.

General Safety

This product is capable of amputating hands and feet and of throwing objects. Always follow all safety instructions to avoid serious personal injury.

Using this product for purposes other than its intended use could prove dangerous to you and bystanders.

- Read and understand the contents of this *Operator's Manual* before starting the engine.
- Do not put your hands or feet near moving components of the machine.
- Do not operate the machine without all guards and other safety protective devices in place and working on the machine.
- Use your full attention while operating the machine. Do not engage in any activity that causes distraction; otherwise, injury or property damage may occur.
- Keep clear of any discharge opening. Keep bystanders and pets a safe distance away from the machine.
- Keep children out of the operating area. Never allow children to operate the machine.
- Stop the machine and shut off the engine before servicing, fueling, or unclogging the machine.

Improperly using or maintaining this machine can result in injury. To reduce the potential for injury, comply with these safety instructions and always pay attention to the safety-alert symbol, which means Caution, Warning, or Danger—personal safety instruction. Failure to comply with these instructions may result in personal injury or death.

You can find additional safety information where needed throughout this *Operator's Manual*.

Engine Emission Certification

The engine in this machine is EPA Tier 4 Final and stage 3b compliant.

Safety and Instructional Decals

Safety decals and instructions are easily visible to the operator and are located near any area of potential danger. Replace any decal that is damaged or missing.

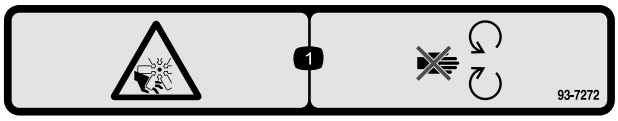

decal93-7272

93-7272

1. Cutting/dismemberment hazard, fan—stay away from moving parts.

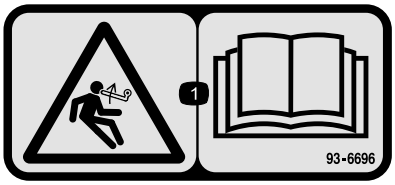

decal93-6696

93–6696

1. Stored energy hazard—read the *Operator's Manual*.

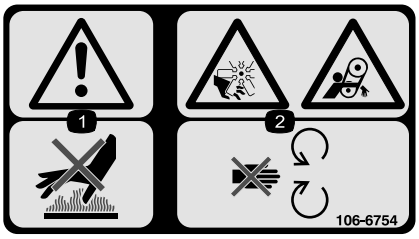

decal106-6754

106-6754

1. Warning—do not touch the hot surface.
2. Cutting/dismemberment hazard, fan and entanglement hazard, belt—stay away from moving parts.

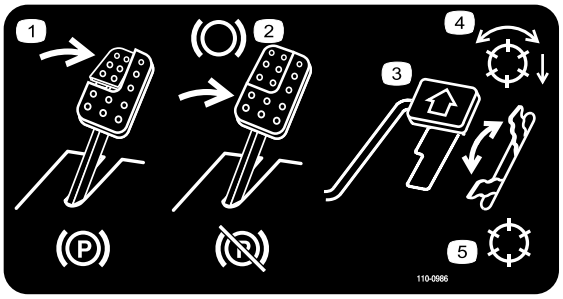

decal110-0986

110-0986

1. Press the brake pedal and parking brake pedal to set the parking brake.
2. Press the brake pedal to apply the brake.
3. Press the traction pedal to move the machine forward.
4. Reel enabled mode
5. Transport mode

---

decal106-6755

106-6755

1. Engine coolant under pressure.
2. Explosion hazard—read the *Operator's Manual.*
3. Warning—do not touch the hot surface.
4. Warning—read the *Operator's Manual.*

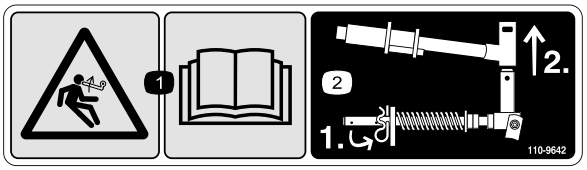

decal110-9642

110-9642

1. Stored energy hazard—read the *Operator's Manual*.
2. Move the cotter pin to the hole closest to the rod bracket and then remove the lift arm and pivot yoke.

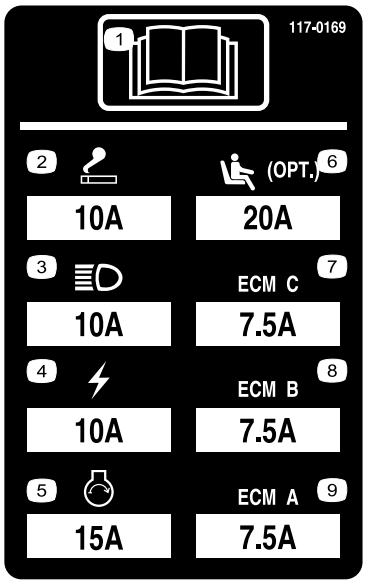

r:\decal117-0169

117-0169

1. Read the *Operator's Manual*.
2. Power point (10 A)
3. Headlights (10 A)
4. Power (10 A)
5. Engine start (15 A)
6. Optional air ride seat suspension (10 A)
7. Engine computer management C (10 A)
8. Engine computer management B (10 A)
9. Engine computer management A (10 A)

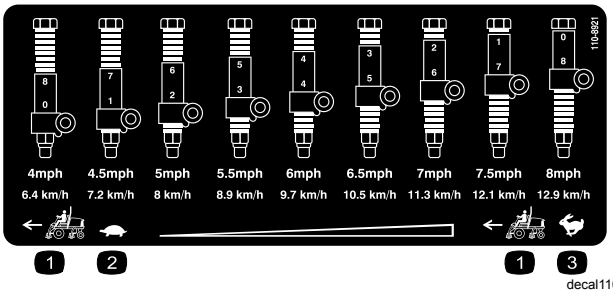

decal110-8921

110-8921

1. Traction unit speed
2. Slow
3. Fast

decal117-2718

117–2718

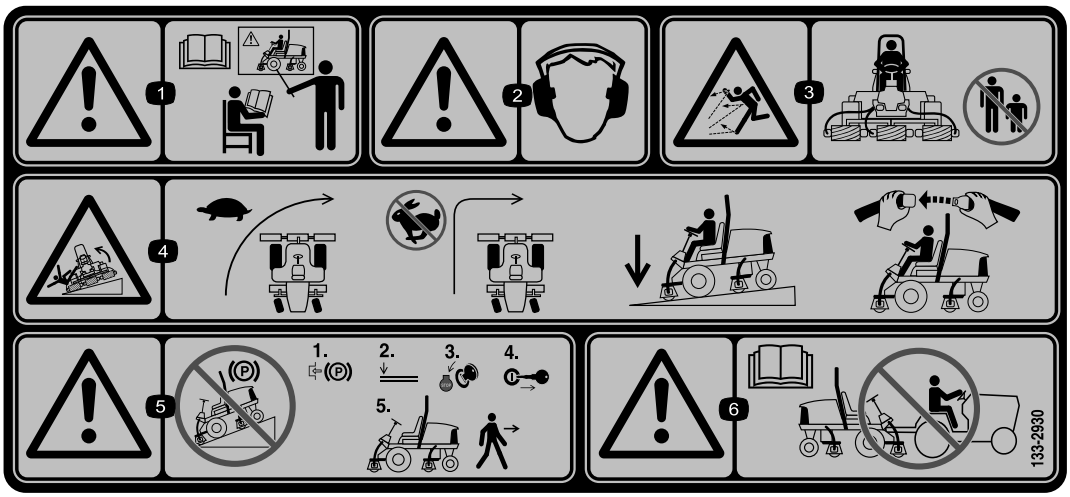

decal133-2930

133-2930

1. Warning—read the *Operator's Manual*; do not operate this machine unless you are trained.
2. Warning—wear hearing protection.
3. Thrown object hazard—keep bystanders a safe distance away from the machine.
4. Tipping hazard—slow the machine before turning; do not turn at high speeds; drive only on slopes with the cutting units lowered; always wear a seatbelt.
5. Warning—do not park on slopes; lock the parking brake, shut off the engine and remove the ignition key before leaving the machine.
6. Warning—read the *Operator's Manual*; do not tow the machine.

decal133-2931

133-2931

(Affix over Part No. 133-2930)

Note: This machine complies with the industry standard stability test in the static lateral and longitudinal tests with the maximum recommended slope indicated on the decal. Review the instructions for operating the machine on slopes in the Operator's Manual as well as the conditions in which you would operate the machine to determine whether you can operate the machine in the conditions on that day and at that site. Changes in the terrain can result in a change in slope operation for the machine. If possible, keep the cutting units lowered to the ground while operating the machine on slopes. Raising the cutting units while operating on slopes can cause the machine to become unstable.

1. Warning—read the *Operator's Manual*; do not operate this machine unless you are trained.
2. Warning—wear hearing protection.
3. Thrown object hazard—keep bystanders a safe distance away from the machine
4. Tipping hazard—do not drive across or down slopes greater than 15 degrees; only drive on slopes with the cutting units lowered; always wear a seatbelt
5. Warning—do not park on slopes; engage the parking brake, shut off the engine, and remove the ignition key before leaving the machine.
6. Warning—read the *Operator's Manual*; do not tow the machine.

decalbatterysymbols

Battery Symbols

Some or all of these symbols are on your battery.

1. Explosion hazard
2. No fire, open flame, or smoking
3. Caustic liquid/chemical burn hazard
4. Wear eye protection.
5. Read the *Operator's Manual.*
6. Keep bystanders a safe distance from the battery.
7. Wear eye protection; explosive gases can cause blindness and other injuries.
8. Battery acid can cause blindness or severe burns.
9. Flush eyes immediately with water and get medical help fast.
10. Contains lead; do not discard

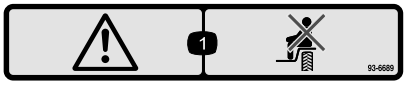

decal93-6689

93–6689

1. Danger—no riders.

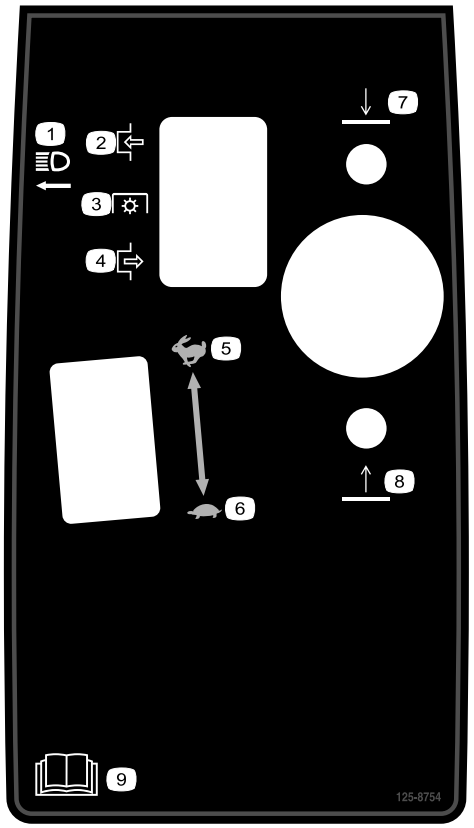

decal125-8754

125–8754

1. Headlights
2. Engage
3. Power take-off (PTO)
4. Disengage
5. Fast
6. Slow
7. Lower the cutting units
8. Raise the cutting units
9. Read the *Operator's Manual*.

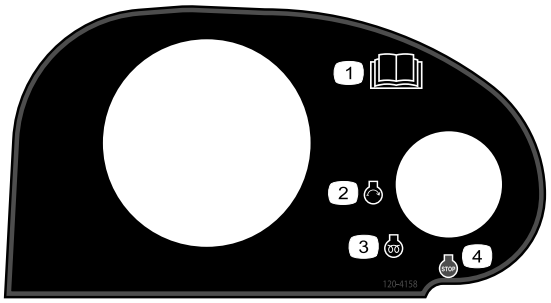

decal120-4158

120–4158

1. Read the *Operator's Manual*.
2. Engine—start
3. Engine—preheat
4. Engine—stop

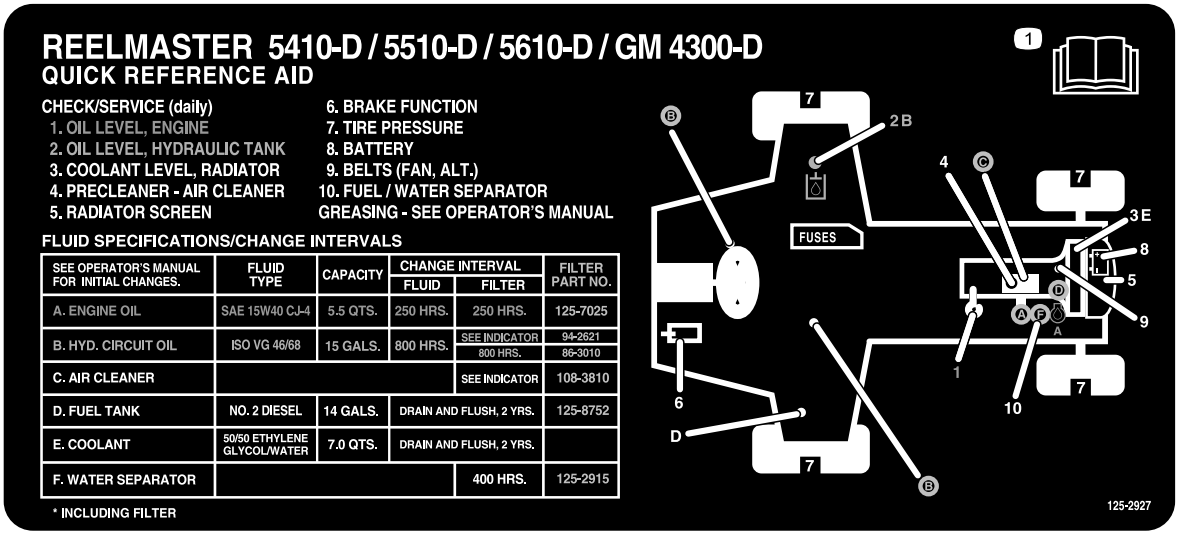

decal125-2927

125–2927

1. Read the *Operator's Manual* for maintenance information.

Setup

Loose Parts

Use the chart below to verify that all parts have been shipped.

Procedure	Description	Qty.	Use
1	No parts required	–	Adjust the tire pressure.
2	No parts required	–	Adjust the control-arm position.
3	Right, front hose guide Left, front hose guide	1 1	Install the cutting units.
4	No parts required	–	Adjust the turf-compensation spring.
5	Cutting-unit kickstand	1	Install the cutting-unit kickstand.
6	Warning decal	1	Replace the decal for CE compliance.

Media and Additional Parts

Description	Qty.	Use
Operator's Manual	1	Read the Operator's Manual before operating the machine.
Engine owner’s manual	1	Read the manual before operating the engine.
Cutting performance paper	1	Adjust the cutting-unit bedknife to reel.
Shim	1	Adjust the cutting-unit bedknife to reel.

Note: Determine the left and right sides of the machine from the normal operating position.

1

Adjusting the Tire Pressure

No Parts Required

Procedure

The tires are over-inflated for shipping. Therefore, release some of the air to reduce the pressure. Correct air pressure in the front and rear tires is 83 to 103 kPa (12 to 15 psi).

Important: **Maintain even pressure in all tires to ensure that there is uniform contact with the turf.**

2

Adjusting the Control-Arm Position

No Parts Required

Procedure

The control-arm position can be adjusted for your comfort.

1. Loosen the 2 bolts securing the control arm to the retaining bracket (Figure 2).

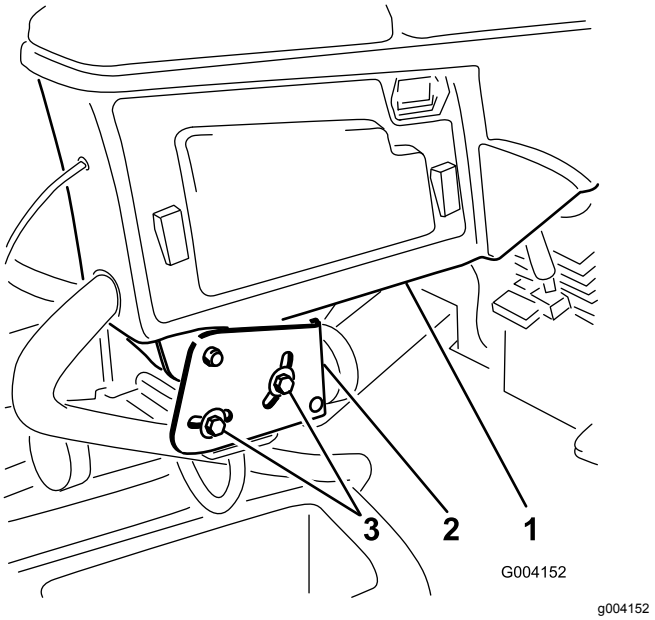

Figure 2

1. Control arm
2. Retaining brackets
3. Bolt

2. Rotate the control arm to the desired position and tighten the 2 bolts.

3

Installing the Cutting Units

Parts needed for this procedure:

1	Right, front hose guide
1	Left, front hose guide

Procedure

1. Remove the reel motors from the shipping brackets.

   Note: Discard the shipping brackets.

2. Remove the cutting units from the cartons.
3. Assemble and adjust the cutting units as described in the *Operator's Manual* for the cutting units.
4. Make sure that the counter weight (Figure 3) is installed to the proper end of each cutting unit as described in the *Operator's Manual* for the cutting units.

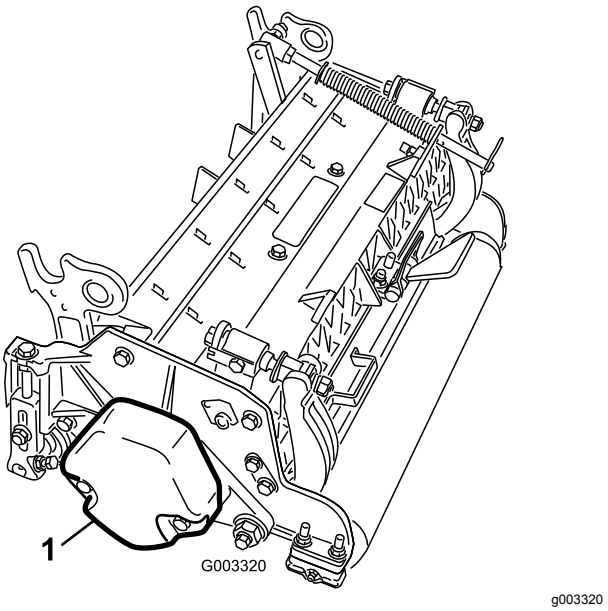

Figure 3

1. Counter weight

5. Mount the turf-compensation spring to the same side of the cutting unit as the reel-drive motor. Reposition the turf-compensation spring as follows:

   Note: All cutting units are shipped with the turf-compensation spring mounted to the right side of the cutting unit.

   A. Remove the 2 carriage bolts and nuts securing the rod bracket to the cutting-unit tabs (Figure 4).

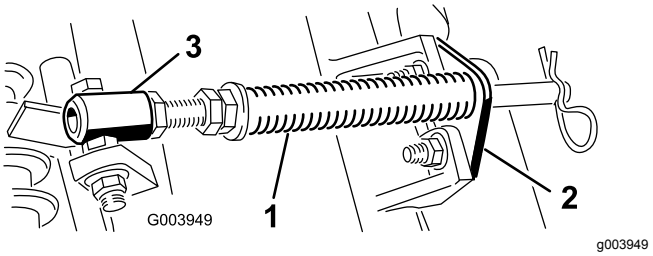

Figure 4

1. Turf-compensation spring
2. Rod bracket
3. Spring tube

   B. Remove the flange nut securing the spring-tube bolt to the carrier-frame tab (Figure 4). Remove the assembly.

   C. Mount the spring-tube bolt to the opposite tab on the carrier frame and secure with the flange nut.

   Note: Position the bolt head to the outer side of the tab as shown in Figure 5.

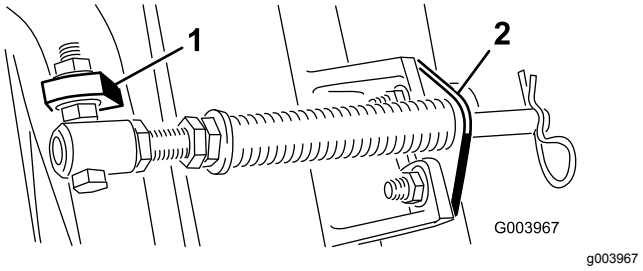

Figure 5

1. Opposite carrier-frame tab
2. Rod bracket

   D. Mount the rod bracket to the cutting-unit tabs with the carriage bolts and nuts (Figure 5).

   Important: **On cutting unit 4 (left front) and cutting unit 5 (right front), use the rod-bracket-mounting nuts to install the hose guides to the front of the cutting-unit tabs (Figure 6 and Figure 7). The hose guides should lean toward the center cutting unit (Figure 7 and Figure 8).**

   Note: When installing or removing the cutting units, make sure that the hairpin cotter is installed in the spring-rod hole next to the rod bracket. When not installing or removing the cutting units, the hairpin cotter must be installed in the hole in the end of the rod.

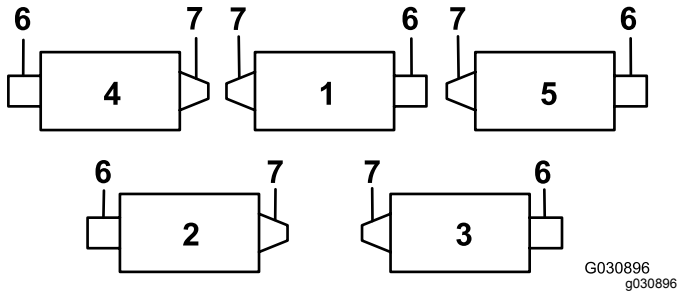

Figure 6

1. Cutting unit 1
2. Cutting unit 2
3. Cutting unit 3
4. Cutting unit 4
5. Cutting unit 5
6. Reel motor
7. Weight

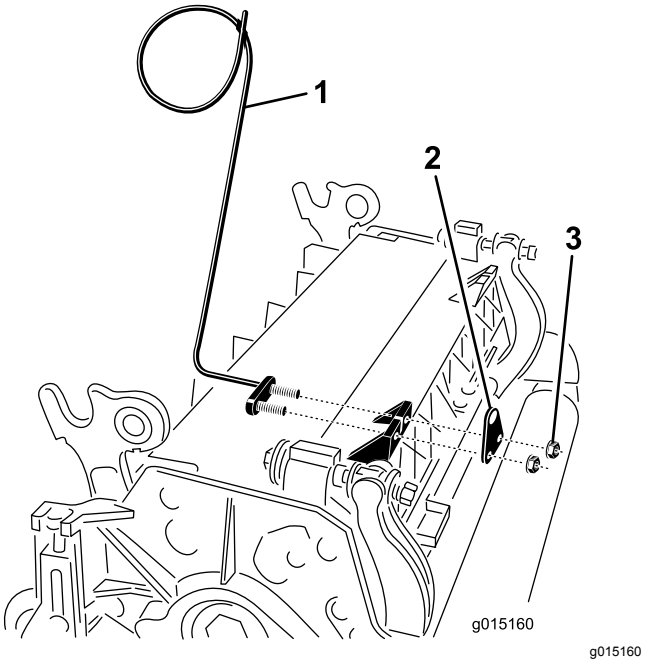

Figure 7

1. Hose guide (cutting unit 4 shown)
2. Rod bracket
3. Nut

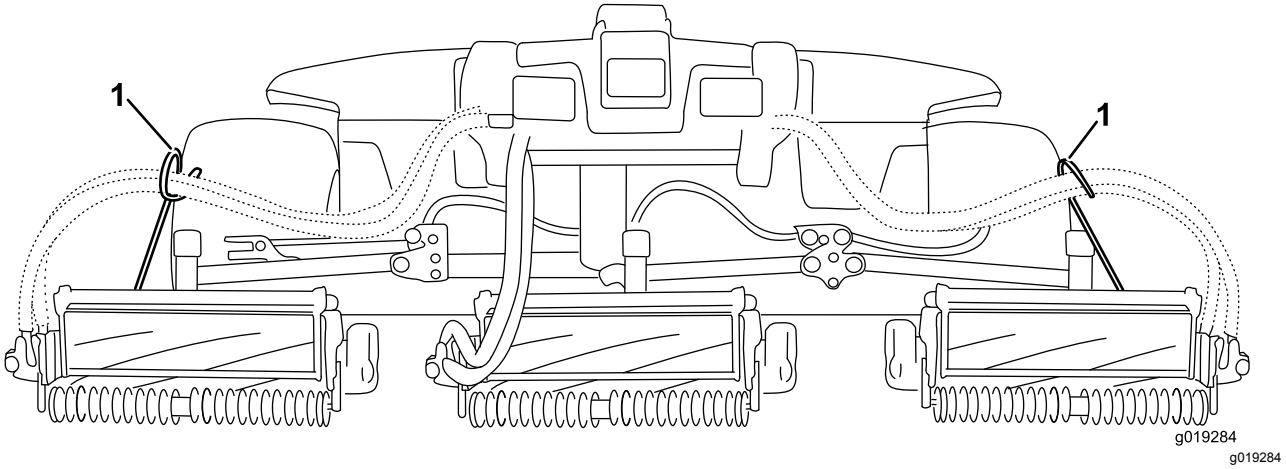

Figure 8

1. Hose guides must lean toward the center cutting unit.

6. Lower all lift arms completely.
7. Remove the snapper pin and the cap from the lift-arm-pivot yoke (Figure 9).

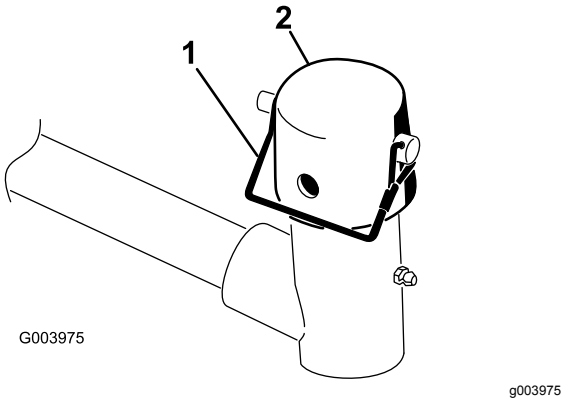

Figure 9

1. Snapper pin
2. Cap

8. For the front cutting units, slide a cutting unit under the lift arm while inserting the carrier-frame shaft up into the lift-arm-pivot yoke (Figure 10).

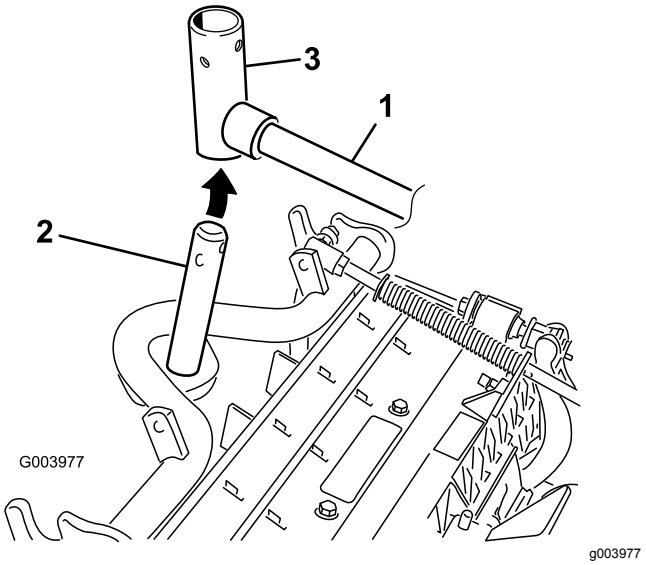

Figure 10

1. Lift arm
2. Carrier-frame shaft
3. Lift-arm-pivot yoke

9. Use the following procedure on the rear cutting units when the height of cut is above 19 mm (3/4 inch).
   A. Remove the lynch pin and washer securing the lift-arm-pivot shaft to the lift arm and slide the lift-arm-pivot shaft out of the lift arm (Figure 11).

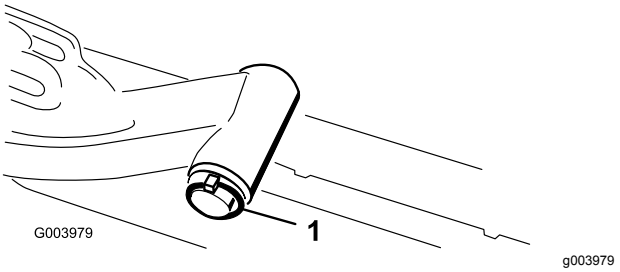

Figure 11

1. Lynch pin and washer

   B. Insert the lift-arm yoke onto the carrier-frame shaft (Figure 10).
   C. Insert the lift-arm shaft into the lift arm and secure it with the washer and lynch pin (Figure 11).

10. Insert the cap over the carrier-frame shaft and lift-arm yoke.
11. Secure the cap and the carrier-frame shaft to the lift-arm yoke with the snapper pin (Figure 9).

    Note: Use the slot if a steering cutting unit is desired or use the hole if the cutting unit is to be locked in position

12. Secure the lift-arm chain to the chain bracket with the snapper pin (Figure 12).

    Note: Use the number of chain links described in the *Operator's Manual* for the cutting unit.

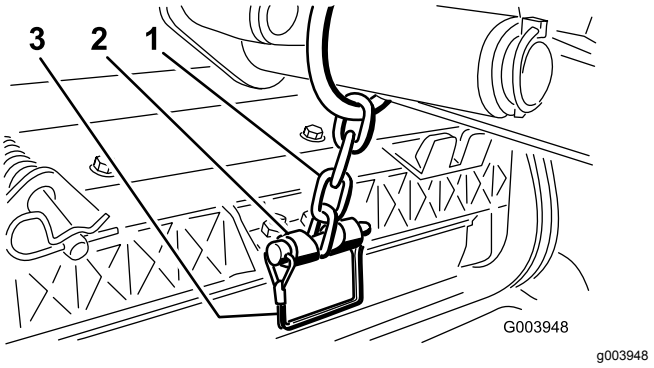

Figure 12

1. Lift-arm chain
2. Chain bracket
3. Pin

13. On cutting unit 4 (left front) and cutting unit 5 (right front), insert the reel-motor hoses into the respective hose guide.
14. Coat the spline shaft of the reel motor with clean grease.
15. Oil the reel-motor O-ring and install it onto the motor flange.
16. Install the motor by rotating it clockwise so that the motor flanges clear the bolts (Figure 13).

Note: Rotate the motor counterclockwise until the flanges encircle the bolts and then tighten the bolts.

Important: **Make sure that the reel-motor hoses are not twisted, kinked, or at risk of being pinched.**

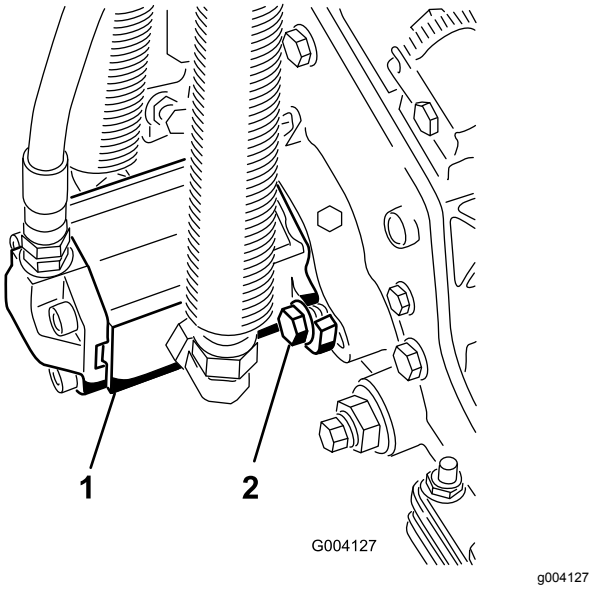

Figure 13

1. Reel-drive motor
2. Mounting bolts

4

Adjusting the Turf-Compensation Spring

No Parts Required

Procedure

The turf-compensation spring transfers weight from the front to the rear roller (Figure 14). This helps to reduce a wave pattern in the turf, also known as marcelling or bobbing.

Important: **Make spring adjustments with the cutting unit mounted to the traction unit, pointing straight ahead and lowered to the ground.**

1. Make sure that the hairpin cotter is installed in the rear hole in the spring rod (Figure 14).

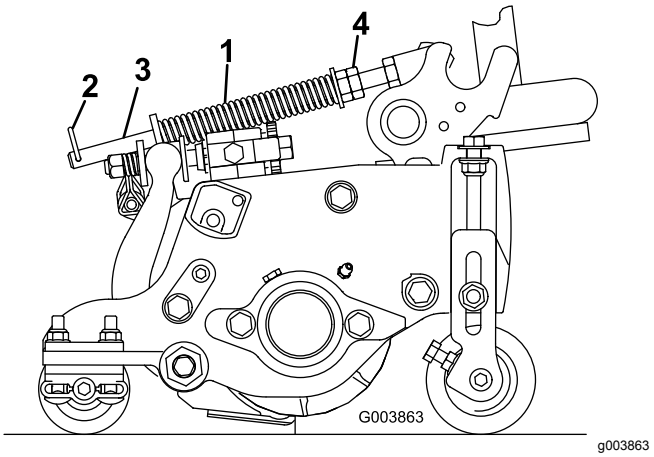

Figure 14

1. Turf-compensation spring
2. Hairpin cotter
3. Spring rod
4. Hex nuts

2. Tighten the hex nuts on the front end of the spring rod until the compressed length of the spring is 12.7 cm (5 inches) for 5-inch cutting units or 15.9 cm (6.25 inches) for 7-inch cutting units (Figure 14).

   Note: When operating on rough terrain, decrease the spring length by 12.7 mm (1/2 inch). This slightly decreases the ground following.

5

Using the Cutting-Unit Kickstand

Parts needed for this procedure:

1	Cutting-unit kickstand

Procedure

Whenever you need to tip the cutting unit to expose the bedknife/reel, prop up the rear of the cutting unit with the kickstand to make sure that the nuts on the back end of the bedbar-adjusting screws are not resting on the work surface (Figure 15).

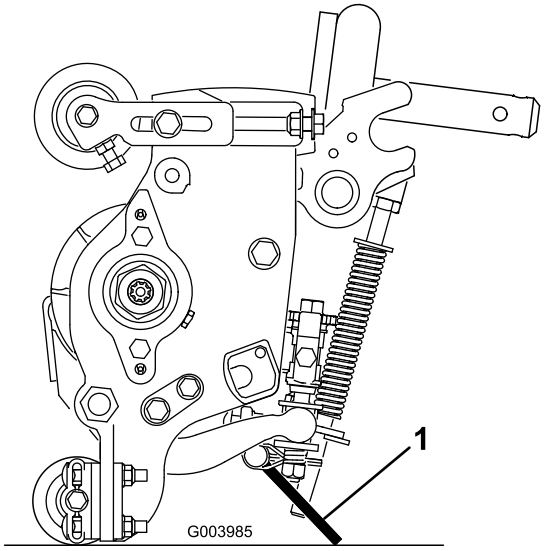

g003985

Figure 15

1. Cutting-unit kickstand

Secure the kickstand to the chain bracket with the snapper pin (Figure 16).

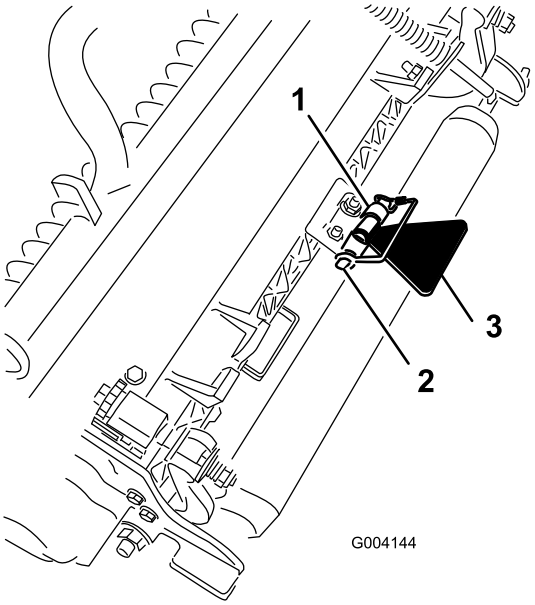

g004144

Figure 16

1. Chain bracket
2. Snapper pin
3. Cutting-unit kickstand

6

Replacing the Warning Decal for CE Compliance

Parts needed for this procedure:

1	Warning decal

Procedure

On machines requiring CE Compliance, affix the CE warning decal (Part No. 133-2931) over the standard warning decal (Part No. 133-2930).

Product Overview

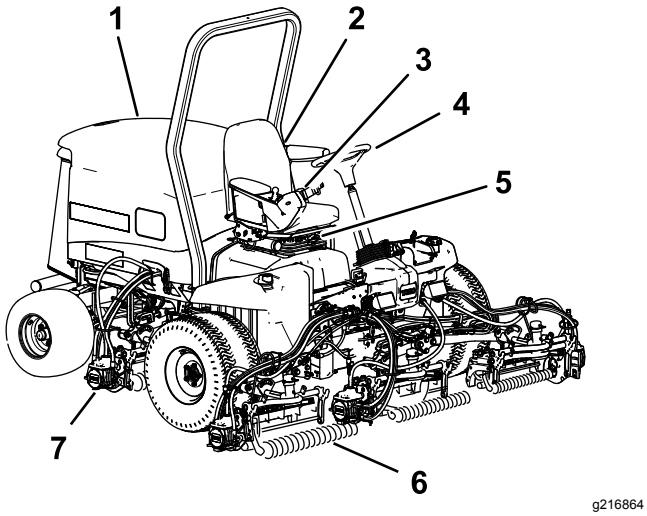

Figure 17

1. Engine hood
2. Seat
3. Control arm
4. Steering wheel
5. Seat adjustments
6. Front cutting units
7. Rear cutting units

Controls

Seat-Adjusting Knobs

The seat-adjusting lever allows you to adjust the seat forward and rearward (Figure 18). The weight-adjusting knob adjusts the seat for your weight. The weight gauge indicates when the seat is adjusted to your weight. The height-adjusting knob adjusts the seat for your height.

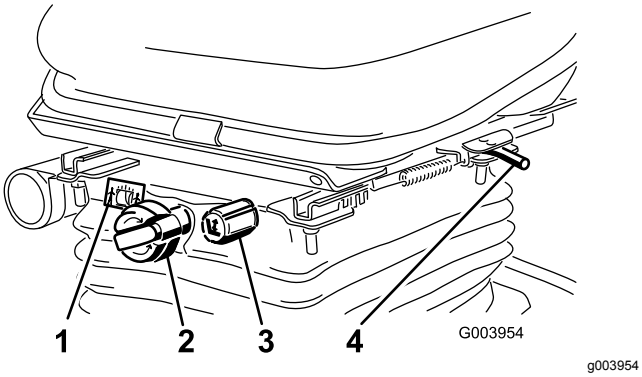

Figure 18

1. Weight gauge
2. Weight-adjusting knob
3. Height-adjusting knob
4. Adjusting lever

Traction Pedal

The traction pedal controls the forward and reverse operation (Figure 19). Press the top of the pedal to move forward and the bottom to move rearward. Ground speed depends on how far you press the pedal. For no load, maximum ground speed, set the engine speed to the FAST position and fully press the pedal.

To stop, reduce foot pressure on the traction pedal and allow it to return to the center position.

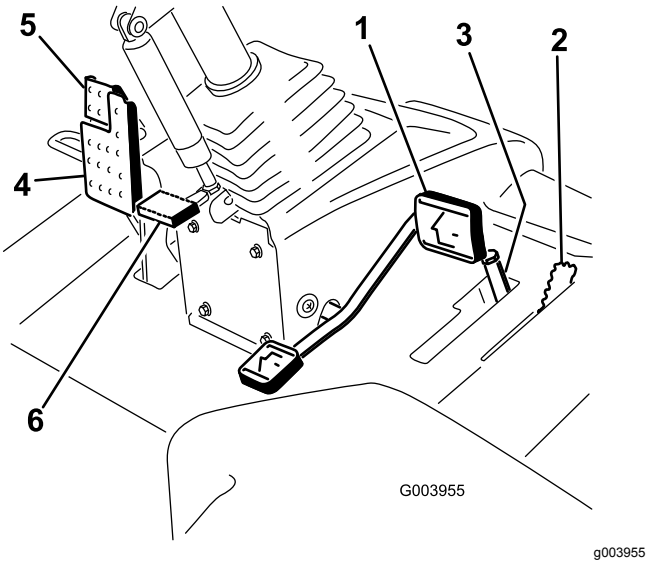

Figure 19

1. Traction pedal
2. Mow-speed limiter
3. Spacers
4. Brake pedal
5. Parking brake
6. Tilt-steering pedal

Mow-Speed Limiter

When the mow-speed limiter is flipped up, it controls the mow speed and allows the cutting units to be engaged (Figure 19). Each spacer adjusts the mowing speed by 0.8 km/h (0.5 mph). The more spacers you have on the top of the bolt, the slower the mowing speed. To transport the machine, flip back the mow-speed limiter for the maximum transport speed.

Brake Pedal

Press the brake pedal to stop the machine (Figure 19).

Parking Brake

To engage the parking brake, push down on the brake pedal and press the top forward to latch (Figure 19). To release the parking brake, press the brake pedal until the parking-brake latch retracts.

Tilt-Steering Pedal

To tilt the steering wheel toward you, press the foot pedal down, pull the steering tower toward you to the most comfortable position, and release the pedal (Figure 19).

Engine-Speed Switch

The engine-speed switch has 2 modes to change the engine speed (Figure 20). By momentarily tapping the switch, you can change the engine speed in 100 rpm increments. If you hold the switch down, the engine automatically moves to High or Low idle, depending on which end of the switch you press.

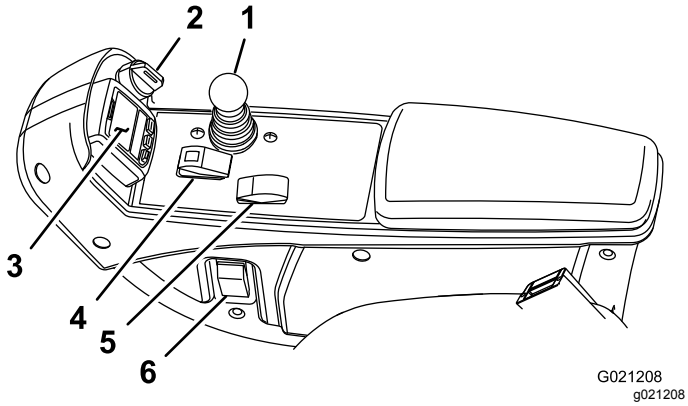

Figure 20

1. Lower mow/raise control lever
2. Key switch
3. InfoCenter
4. Enable/disable switch
5. Engine-speed switch
6. Headlight switch

Enable/Disable Switch

Use the enable/disable switch in conjunction with the lower mow/raise control lever to operate the cutting units (Figure 20).

InfoCenter

The InfoCenter LCD display shows information about your machine, such as the operating status, various diagnostics, and other information about the machine (Figure 20).

Key Switch

The key switch has 3 positions: OFF, ON/RUN, and START (Figure 20).

Lower Mow/Raise Control Lever

This lever raises and lowers the cutting units and also starts and stops the cutting units when the cutting units are enabled in the MOW mode (Figure 20). You cannot lower the cutting units when the mow/transport lever is in the TRANSPORT position.

Headlight Switch

Pivot the switch downward to turn on the headlights (Figure 20).

Backlap Levers

Use the backlap levers in conjunction with the lower mow/raise control lever for backlapping the reels (Figure 21).

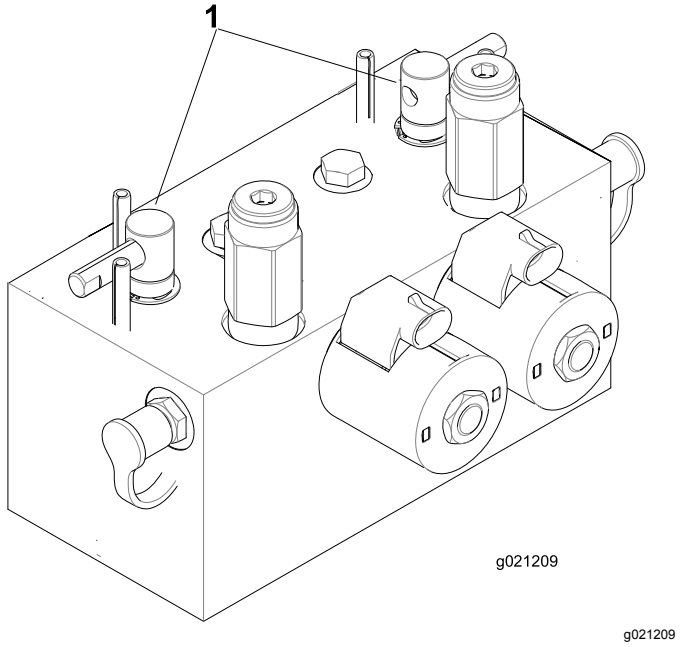

Figure 21

1. Backlap levers

Hydraulic-Filter-Restriction Indicator

With the engine running at normal operating temperature, ensure that the indicator is in the green zone (Figure 22). When the indicator is in the red zone, change the hydraulic filters.

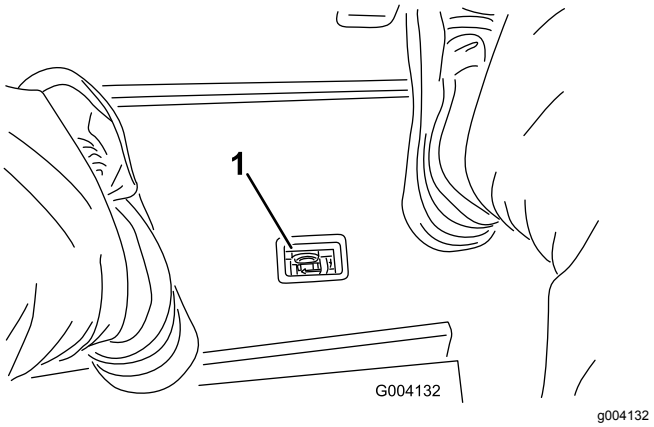

Figure 22

1. Hydraulic-filter-restriction indicator

Power Point

The power point is a 12 V power supply for electronic devices (Figure 23).

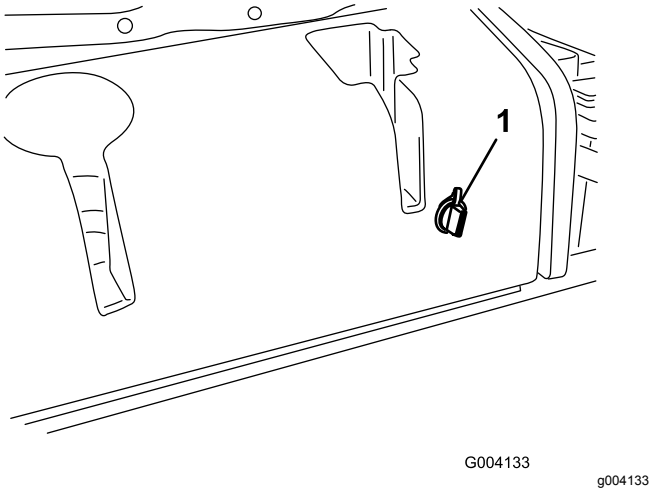

Figure 23

1. Power point

Using the InfoCenter LCD Display

The InfoCenter LCD display shows information about your machine, such as the operating status, various diagnostics, and other information about the machine (Figure 24). There is a splash screen and main information screen of the InfoCenter. You can switch between the splash screen and main information screen, at any time, by pressing any of the InfoCenter buttons and then selecting the appropriate directional arrow.

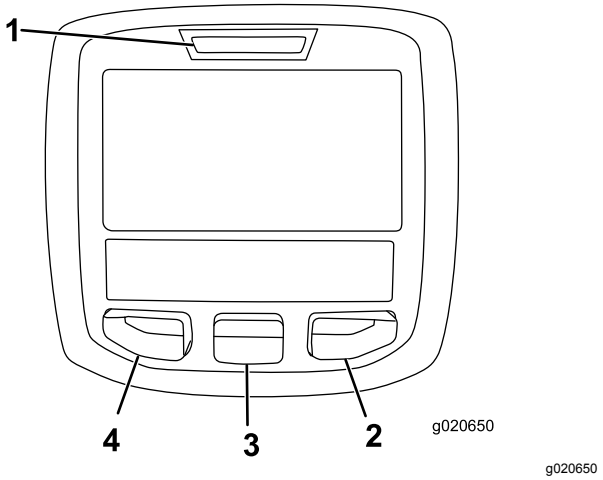

Figure 24

1. Indicator light
2. Right button
3. Middle button
4. Left button

- Left Button, Menu Access/Back Button— Press this button to access the InfoCenter menus. You can use it to back out of any menu you are currently using.
- Middle Button— Press this button to scroll down menus.
- Right Button— Press this button to open a menu where a right arrow indicates additional content.

Note: The purpose of each button may change depending on what is required at the time. Each button is labeled with an icon displaying its current function.

InfoCenter Icon Description

	Hours remaining until service
	Reset the service hours 🔒
SERVICE DUE	Indicates when scheduled service should be performed
n min	Engine rpm/status—indicates the engine speed (rpm)
	Hour meter
i	Info icon
	Fast
	Slow
	Fuel level
	Stationary regeneration is required.
	The glow plugs are active.
	Raise the cutting units.
	Lower the cutting units.
	Sit in the seat.
P	Parking brake is On.
H	The range is high (transport).
N	Neutral
L	The range is low (mow).
	Engine-coolant temperature (°C or °F)
	Temperature (hot)
	The PTO is engaged.
	Not allowed

	Start the engine.
	Shut off the engine.
	Engine
	Key switch
	The cutting units are lowering.
	The cutting units are raising.
PIN	PIN code
CAN	CAN bus
	InfoCenter
Bad	Bad or failed
	Bulb
OUT	Output of TEC controller or control wire in harness
	Switch
	Release the switch.
	Change to the indicated state.
Symbols are often combined to form sentences. Some examples are shown below	
N	Put the machine into Neutral.
	Engine start is denied.
STOP	Engine shutdown
	Engine coolant is too hot.
	Reset-standby regeneration request Parked or recovery regeneration request
ACK	A parked or recovery regeneration is processing.

	High exhaust temperature
48.1g/l	DPF ash-accumulation notification—Refer to DPF Ash Accumulation (page 31) for details.
or	Sit down or engage the parking brake

Using the Menus

To access the InfoCenter menu system, press the menu access button while at the main screen. This brings you to the main menu. Refer to the following tables for a synopsis of the options available from the menus:

Main Menu	
Menu Item	**Description**
Faults	Contains a list of the recent machine faults. Refer to the *Service Manual* or contact your authorized Toro distributor for more information on the Faults menu and the information contained there.
Service	Contains information on the machine such as hours of use counters and other similar numbers.
Diagnostics	Displays the state of each machine switch, sensor and control output. You can use this to troubleshoot certain issues as it quickly tells you which machine controls are on and which are off.
Settings	Allows you to customize and modify configuration variables on the InfoCenter display.
About	Lists the model number, serial number, and software version of your machine.

Service	
Menu Item	**Description**
Hours	Lists the total number of hours that the machine, engine and PTO have been on, as well as the number of hours the machine has been transported and service due.
Counts	Lists numerous counts the machine has experienced.
DPF Regeneration	The diesel particulate filter regeneration option and DPF submenus
Inhibit Regen	Use to control reset regeneration
Parked Regen	Use to initiate a parked regeneration
Last Regen	Lists the number hours since the last reset, parked, or recovery regeneration
Recover Regen	Use to initiate a recovery regeneration

Diagnostics	
Menu Item	**Description**
Cutting Units	Indicates the inputs, qualifiers and outputs for raising and lowering the cutting units.
Hi/Low Range	Indicates the inputs, qualifiers and outputs for driving in transport mode.
PTO	Indicates the inputs, qualifiers and outputs for enabling the PTO circuit.
Engine Run	Indicates the inputs, qualifiers and outputs for starting the engine.
Backlap	Indicates the inputs, qualifiers and outputs for operating the backlap function.

Settings	
Menu Item	**Description**
Units	Controls the units used on the InfoCenter. The menu choices are English or Metric
Language	Controls the language used on the InfoCenter*.
LCD Backlight	Controls the brightness of the LCD display.
LCD Contrast	Controls the contrast of the LCD display.
Front Backlap Reel Speed	Controls the speed of the front reels in backlap mode.
Rear Backlap Reel Speed	Controls the speed of the rear reels in backlap mode.
Protected Menus	Allows a person authorized by your company with the PIN code to access protected menus.
Auto Idle 🔒	Controls the amount of time allowed before returning the engine to low idle when the machine is stationary.
Blade Count 🔒	Controls the number of blades on the reel for reel speed.
Mow Speed 🔒	Controls the ground speed for determining the reel speed.

Height of cut (HOC) 🔒	Controls the height of cut (HOC) for determining the reel speed.
F Reel RPM 🔒	Displays the calculated reel speed position for the front reels. The reels can also be manually adjusted.
R Reel RPM 🔒	Displays the calculated reel speed position for the rear reels. The reels can also be manually adjusted.

*Only operator-faced text is translated. Faults, Service, and Diagnostics screens are service-faced. Titles appear in the selected language, but menu items are in English.

🔒 Protected under Protected Menus—accessible only by entering PIN

About	
Menu Item	**Description**
Model	Lists the model number of the machine.
SN	Lists the serial number of the machine.
Machine-Controller Revision	Lists the software revision of the master controller.
InfoCenter Revision	Lists the software revision of the InfoCenter.
CAN Bus	Lists the machine communication bus status.

Protected Menus

There are 8 operating configuration settings that are adjustable within the Settings Menu of the InfoCenter: auto idle time delay, Blade Count, Mow Speed, Height of Cut (HOC), F Reel RPM, and R Reel RPM. These settings can be locked by using the Protected Menu.

Note: At the time of delivery, the initial password code is programmed by your distributor.

Accessing Protected Menus

Note: The factory default PIN code for you machine is either 0000 or 1234.

If you changed the PIN code and forgot the code, contact your authorized Toro distributor for assistance.

1. From the MAIN MENU, use the center button to scroll down to the SETTINGS MENU and press the right button (Figure 25).

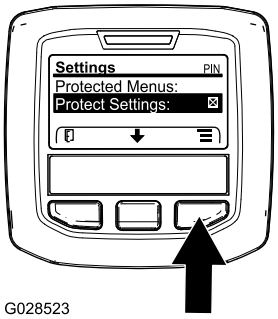

g028523

Figure 25

2. In the SETTINGS MENU, use the center button to scroll down to the PROTECTED MENU and press the right button (Figure 26A).

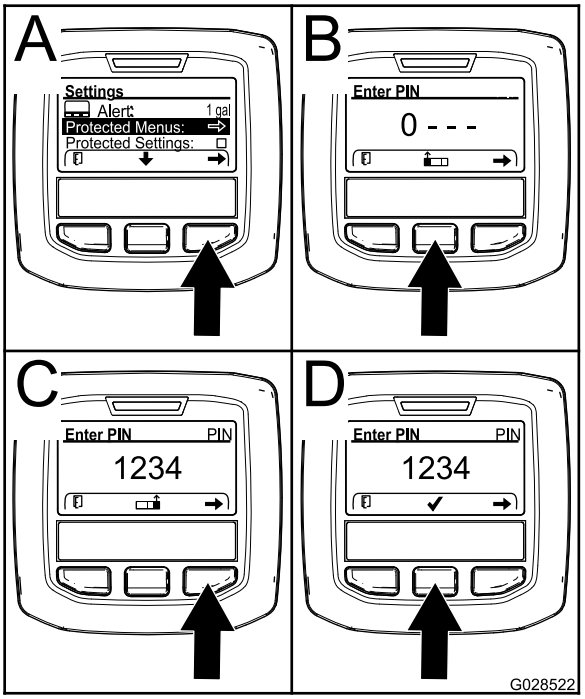

g028522

Figure 26

3. To enter the PIN code, press the center button until the correct first digit appears, then press the right button to move on to the next digit (Figure 26B and Figure 26C). Repeat this step until the last digit is entered and press the right button once more.

4. Press the middle button to enter the PIN code (Figure 26D).

   Wait until the red indicator light of the InfoCenter illuminates.

   Note: If the InfoCenter accepts the PIN code and the protected menu is unlocked, the word “PIN” displays in the upper right corner of the screen.

Note: Rotate the key switch to the OFF position and then to the ON position locks the protected menu.

You have the ability to view and change the settings in the Protected Menu. Once you access the Protected Menu, scroll down to Protect Settings option. Use the right button to change the setting. Setting the Protect Settings to OFF allows you to view and change the settings in the Protected Menu without entering the PIN code. Setting the Protect Settings to ON hides the protected options and requires you to enter the PIN code to change the setting in the Protected Menu. After you set the PIN code, rotate the key switch OFF and back to the ON position to enable and save this feature.

Viewing and Changing the Protected Menu Settings

1. In the Protected Menu, scroll down to Protect Settings.
2. To view and change the settings without entering a passcode, use the right button to change the Protect Settings to OFF.
3. To view and change the settings with a passcode, use the left button to change the Protect Settings to ON, set the passcode, and turn the key in the ignition switch to the OFF position and then to the ON position.

Setting the Auto Idle

1. In the Settings Menu, scroll down to Auto Idle.
2. Press the right button to change the auto idle time between OFF, 8S, 10S, 15S, 20S, and 30S.

Setting the Blade Count

1. In the Settings Menu, scroll down to Blade Count.
2. Press the right button to change the blade count between 5, 8, or 11 blade reels.

Setting the Mow Speed

1. In the Settings Menu, scroll down to Mow Speed.
2. Press the right button to select mow speed.
3. Use the center and right button to select the appropriate mow speed set on the mechanical mow-speed limiter on the traction pedal.
4. Press the left button to exit mow speed and save the setting.

Setting the Height of Cut (HOC)

1. In the Settings Menu, scroll down to HOC.
2. Press the right button to select HOC.
3. Use the center and right button to select the appropriate HOC setting. (If the exact setting is not displayed, select the nearest HOC setting from the list displayed).
4. Press the left button to exit HOC and save the setting.

Setting the Front and Rear Reel Speeds

Although the front and rear reel speeds are calculated by inputting the number of blades, mow speed and HOC into the InfoCenter, the setting can be manually changed to accommodate for different mowing conditions.

1. To change the Reel Speed Settings, scroll down to the F Reel RPM, R Reel RPM, or both.
2. Press the right button to change the reel speed value. As you change the speed setting, the display continues to show the calculated reel speed based on blade count, mow speed and HOC, which was previously entered, but the new value is also displayed.

Specifications

Note: Specifications and design are subject to change without notice.

Specification	ReelMaster® 5410-D	ReelMaster® 5510-D
Transport width	228 cm (90 inches)	233 cm (92 inches)
Width of cut	254 cm (100 inches)	254 cm (100 inches)
Length	282 cm (111 inches)	282 cm (111 inches)
Height	160 cm (63 inches)	160 cm (63 inches)
Weight (with fluids and 8 blade cutting units installed)	1,335 kg (2,943 lb)	1,420 kg (3,131 lb)
Engine	Yanmar 36 hp	Yanmar 36 hp
Fuel-tank capacity	53 L (14 US gallons)	53 L (14 US gallons)
Transport speed	0 to 16 km/h (0 to 10 mph)	0 to 16 km/h (0 to 10 mph)
Mowing speed	0 to 13 km/h (0 to 8 mph)	0 to 13 km/h (0 to 8 mph)

Attachments/Accessories

A selection of Toro approved attachments and accessories is available for use with the machine to enhance and expand its capabilities. Contact your Authorized Service Dealer or Distributor or go to www.Toro.com for a list of all approved attachments and accessories.

To best protect your investment and maintain optimal performance of your Toro equipment, count on Toro genuine parts. When it comes to reliability, Toro delivers replacement parts designed to the exact engineering specification of our equipment. For peace of mind, insist on Toro genuine parts.

Operation

Note: Determine the left and right sides of the machine from the normal operating position.

Before Operation Safety

General Safety

- Never allow children or untrained people to operate or service the machine. Local regulations may restrict the age of the operator. The owner is responsible for training all operators and mechanics.
- Become familiar with the safe operation of the equipment, operator controls, and safety signs.
- Know how to stop the machine and shut off the engine quickly.
- Check that operator-presence controls, safety switches, and shields are attached and functioning properly. Do not operate the machine unless they are functioning properly.
- Before mowing, always inspect the machine to ensure that the blades, blade bolts, and cutting assemblies are in good working condition. Replace worn or damaged blades and bolts in sets to preserve balance.
- Inspect the area where you will use the machine and remove all objects that the machine could throw.

Fuel Safety

- Use extreme care in handling fuel. It is flammable and its vapors are explosive.
- Extinguish all cigarettes, cigars, pipes, and other sources of ignition.
- Use only an approved fuel container.
- Do not remove the fuel cap or fill the fuel tank while the engine is running or hot.
- Do not add or drain the fuel in an enclosed space.
- Do not store the machine or fuel container where there is an open flame, spark, or pilot light, such as on a water heater or other appliance.
- If you spill fuel, do not attempt to start the engine; avoid creating any source of ignition until the fuel vapors have dissipated.

Filling the Fuel Tank

Fuel Tank Capacity

53 L (14 US gallons)

Fuel Specification

Important: **Use only ultra-low sulphur diesel fuel. Fuel with higher rates of sulfur degrades the diesel oxidation catalyst (DOC), which causes operational problems and shortens the service life of engine components.**

Failure to observe the following cautions may damage the engine.

- Never use kerosene or gasoline instead of diesel fuel.
- Never mix kerosene or used engine oil with the diesel fuel.
- Never keep fuel in containers with zinc plating on the inside.
- Do not use fuel additives.

Petroleum Diesel

Cetane rating: 45 or higher

Sulfur content: Ultra-low sulfur (<15 ppm)

Fuel Table

Diesel fuel specification	Location
ASTM D975 No. 1-D S15 No. 2-D S15	USA
EN 590	European Union
ISO 8217 DMX	International
JIS K2204 Grade No. 2	Japan
KSM-2610	Korea

- Use only clean, fresh diesel fuel or biodiesel fuels.
- Purchase fuel in quantities that can be used within 180 days to ensure fuel freshness.

Use summer-grade diesel fuel (No. 2-D) at temperatures above -7°C (20°F) and winter-grade fuel (No. 1-D or No. 1-D/2-D blend) below that temperature.

Note: Use of winter-grade fuel at lower temperatures provides lower flash point and cold flow characteristics which eases starting and reduces fuel filter plugging.

Using summer-grade fuel above -7°C (20°F) contributes toward longer fuel pump life and increased power compared to winter-grade fuel.

Biodiesel

This machine can also use a biodiesel blended fuel of up to B20 (20% biodiesel, 80% petroleum diesel).

Sulfur content: Ultra-low sulfur (<15 ppm)

Biodiesel fuel specification: ASTM D6751 or EN14214

Blended fuel specification: ASTM D975, EN590, or JIS K2204

Important: **The petroleum diesel portion must be ultra-low sulfur.**

Observe the following precautions:

- Biodiesel blends may damage painted surfaces.
- Use B5 (biodiesel content of 5%) or lesser blends in cold weather.
- Monitor seals, hoses, gaskets in contact with fuel as they may be degraded over time.
- Fuel filter plugging may be expected for a time after converting to biodiesel blends.
- Contact your authorized Toro distributor if you wish for more information on biodiesel.

Adding Fuel

1. Park the machine on a level surface, lower the cutting units, shut off the engine, and remove the key.
2. Using a clean rag, clean area around fuel-tank cap.
3. Remove the cap from the fuel tank (Figure 27).

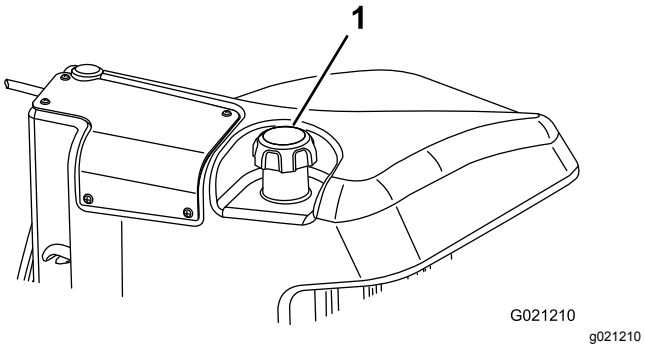

Figure 27

1. Fuel-tank cap

4. Fill the tank until the level is 6 to 13 mm (1/4 to 1/2 inch) below the bottom of the filler neck.
5. Install the fuel-tank cap tightly after filling the tank.

   Note: If possible, fill the fuel tank after each use. This minimizes possible buildup of condensation inside the fuel tank.

Checking the Engine-Oil Level

Before you start the engine and use the machine, check the oil level in the engine crankcase; refer to Checking the Engine-Oil Level (page 53).

Checking the Cooling System

Service Interval: Before each use or daily

Clean debris off the screen, oil cooler, and front of the radiator daily and more often if conditions are extremely dusty and dirty. Refer to Removing Debris from the Cooling System (page 59).

The cooling system is filled with a 50/50 solution of water and permanent ethylene glycol antifreeze. Check the level of coolant in the expansion tank at the beginning of each day before starting the engine. The capacity of the cooling system is 6.6 L (7.0 US qt).

⚠ CAUTION

If the engine has been running, the pressurized, hot coolant can escape and cause burns.

- **Do not open the radiator cap when the engine is running.**
- **Use a rag when opening the radiator cap, and open the cap slowly to allow steam to escape.**

1. Check the level of coolant in the expansion tank (Figure 28).

   The coolant level should be between the marks on the side of the tank.

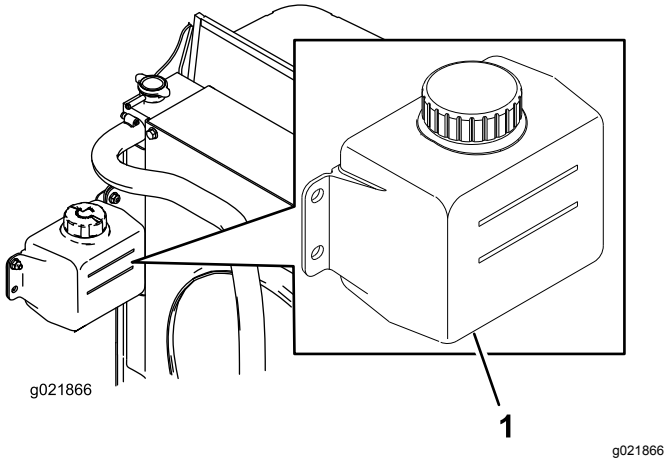

Figure 28

1. Expansion tank

2. If the coolant level is low, remove the expansion-tank cap and replenish the system. **Do not overfill.**
3. Install the expansion-tank cap.

Checking the Hydraulic Fluid

Service Interval: Before each use or daily

The machines reservoir is filled at the factory with approximately 30 L (8 US gallons) of high-quality hydraulic fluid. Check the level of the hydraulic fluid before the engine is first started and daily thereafter. The recommended replacement fluid is as follows:

> **Toro Premium All Season Hydraulic Fluid** (Available in 19 L (5 US gallon) pails or 208 L (55 US gallon) drums. See the *Parts Catalog* or your authorized Toro distributor for part numbers.)

Alternate fluids: If the Toro fluid is not available, other fluids may be used provided they meet all the following material properties and industry specifications. Do not use synthetic fluid. Consult with your lubricant distributor to identify a satisfactory product.

Note: Toro does not assume responsibility for damage caused by improper substitutions, so use only products from reputable manufacturers who stand behind their recommendation.

High Viscosity Index/Low Pour Point Anti-wear Hydraulic Fluid, ISO VG 46

Material Properties:

Viscosity, ASTM D445	cSt @ 40°C 44 to 50 cSt @ 100°C 7.9 to 8.5
Viscosity Index ASTM D2270	140 to 160
Pour Point, ASTM D97	-36.6°C (-34°F) to 9.4°C (-49°F)

Industry Specifications:

Vickers I-286-S (Quality Level), Vickers M-2950-S (Quality Level), Denison HF-0

Important: **The ISO VG 46 Multigrade fluid has been found to offer optimal performance in a wide-range of temperature conditions. For operation in consistently high ambient temperatures, 18°C (65°F) to 49°C (120°F), ISO VG 68 hydraulic fluid may offer improved performance.**

Premium Biodegradable Hydraulic Fluid-Mobil EAL EnviroSyn 46H

Important: **Mobil EAL EnviroSyn 46H is the only synthetic biodegradable fluid approved by Toro. This fluid is compatible with the elastomers used in Toro hydraulic systems and is suitable for a wide-range of temperature conditions. This fluid is compatible with conventional mineral oils, but for maximum biodegradability and performance, the hydraulic system should be thoroughly flushed of conventional fluid. The oil is available in 19 L (5 US gallon) containers or 208 L (55 US gallon) drums from your Mobil distributor.**

Important: **Many hydraulic fluids are almost colorless, making it difficult to spot leaks. A**

red dye additive for the hydraulic system oil is available in 20 ml (2/3 oz) bottles. 1 bottle is sufficient for 15 to 22 L (4 to 6 gallons) of hydraulic oil. Order Part Number 44-2500 from your authorized Toro distributor. This red dye is not recommended for use with biodegradable fluids. Use food coloring.

1. Position the machine on a level surface, lower the cutting units, and shut off the engine.
2. Clean the area around the filler neck and cap of the hydraulic tank (Figure 29). Remove the cap from the filler neck.

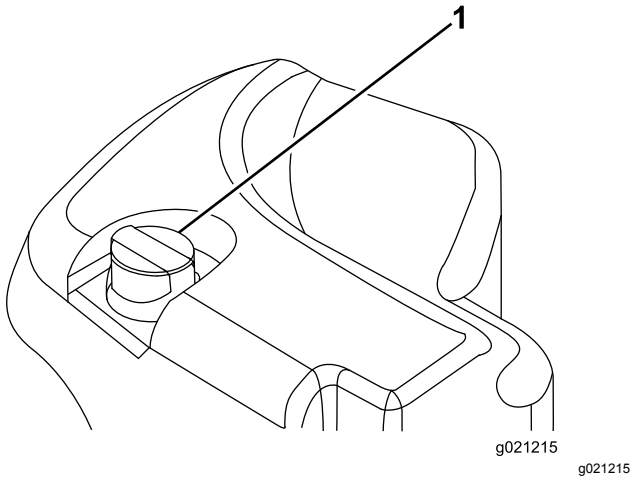

Figure 29

1. Hydraulic-tank cap

3. Remove the dipstick from the filler neck and wipe it with a clean rag.
4. Insert the dipstick into the filler neck; then remove it and check the level of the fluid.

   Note: The fluid level should be within 6.3 mm (1/4 inch) of the mark on the dipstick.

   Important: **Do not overfill.**
5. If the level is low, add appropriate fluid to raise the level to the FULL mark.
6. Install the dipstick and cap onto the filler neck.

Checking the Reel-to-Bedknife Contact

Service Interval: Before each use or daily

Each day before operating, check reel-to-bedknife contact, regardless if the quality of cut had previously been acceptable. There must be light contact across the full length of the reel and the bedknife (refer to Adjusting the Reel to Bedknife in the *Operator's Manual* for the cutting units).

Checking the Torque of the Wheel Nuts

Service Interval: After the first hour

After the first 10 hours

Every 250 hours

Torque the wheel nuts to 94 to 122 N·m (70 to 90 ft-lb).

⚠ WARNING

Failure to maintain proper torque of the wheel nuts could result in personal injury.

Maintain the proper torque on the wheel nuts.

Burnishing the Brakes

To ensure optimum performance of the parking-brake system, burnish (break in) the brakes before use. Set the forward traction speed to 6.4 km/h (4 mph) to match the reverse traction speed (all 8 spacers moved to the top of the mow-speed control). With the engine at high idle, proceed forward with the mow-speed-control stop engaged and ride the brake for 15 seconds. Proceed backward at full reverse speed and ride the brake for 15 seconds. Repeat this 5 times, waiting 1 minute between each forward and reverse cycle to avoid overheating the brakes; refer to Adjusting the Parking Brakes (page 60).

During Operation Safety

General Safety

- The owner/operator can prevent and is responsible for accidents that may cause personal injury or property damage.
- Wear appropriate clothing, including eye protection; slip-resistant, substantial footwear; long pants; and hearing protection. Tie back long hair and do not wear dangling jewelry.
- Do not operate the machine while ill, tired, or under the influence of alcohol or drugs.
- Never carry passengers on the machine and keep bystanders and pets away from the machine during operation.
- Operate the machine only in good visibility to avoid holes or hidden hazards.
- Avoid mowing on wet grass. Reduced traction could cause the machine to slide.
- Before you start the engine, ensure that all drives are in neutral, the parking brake is engaged, and you are in the operating position.
- Keep your hands and feet away from the cutting units. Keep clear of the discharge opening at all times.
- Look behind and down before backing up to be sure of a clear path.
- Use care when approaching blind corners, shrubs, trees, or other objects that may obscure your vision.
- Do not mow near drop-offs, ditches, or embankments. The machine could suddenly roll over if a wheel goes over the edge or if the edge gives way.
- Stop the cutting units whenever you are not mowing.
- Stop the machine and inspect the cutting units after striking an object or if there is an abnormal vibration in the machine. Make all necessary repairs before resuming operation.
- Slow down and use caution when making turns and crossing roads and sidewalks with the machine. Always yield the right-of-way.
- Disengage the drive to the cutting unit and shut off the engine before adjusting the height of cut (unless you can adjust it from the operating position).
- Never run an engine in an area where exhaust gasses are enclosed.
- Never leave a running machine unattended.
- Before leaving the operating position (including to empty the catchers or to unclog the chute), do the following:
  - Park the machine on level ground.
  - Disengage the power take-off and lower the attachments.
  - Engage the parking brake.
  - Shut off the engine and remove the key.
  - Wait for all moving parts to stop.
- Do not operate the machine when there is the risk of lightning.
- Do not use the machine as a towing vehicle.
- Use accessories, attachments, and replacement parts approved by The Toro® Company only.

Rollover Protection System (ROPS) Safety

- **Do not** remove the ROPS from the machine.
- Ensure that the seat belt is attached and that you can release it quickly in an emergency.
- Check carefully for overhead obstructions and do not contact them.
- Keep the ROPS in safe operating condition by thoroughly inspecting it periodically for damage and keeping all the mounting fasteners tight.
- Replace a damaged ROPS. Do not repair or alter it.

Machines with a Foldable Roll Bar

- Always use the seat belt with the roll bar in the raised position.
- The ROPS is an integral safety device. Keep a folding roll bar in the raised and locked position, and use the seat belt when operating the machine with the roll bar in the raised position.
- Lower a folding roll bar temporarily only when necessary. Do not wear the seat belt when the roll bar is folded down.
- Be aware that there is no rollover protection when a folded roll bar is in the down position.
- Check the area that you will be mowing and never fold down a folding roll bar in areas where there are slopes, drop-offs, or water.

Slope Safety

- Slopes are a major factor related to loss of control and rollover accidents, which can result in severe injury or death. You are responsible for safe slope operation. Operating the machine on any slope requires extra caution.
- Evaluate the site conditions to determine if the slope is safe for machine operation, including surveying the site. Always use common sense and good judgment when performing this survey.

- Review the slope instructions listed below for operating the machine on slopes and review the conditions to determine whether you can operate the machine in the conditions on that day and at that site. Changes in the terrain can result in a change in slope operation for the machine.
- Avoid starting, stopping or turning the machine on slopes. Avoid making sudden changes in speed or direction. Make turns slowly and gradually.
- Do not operate a machine under any conditions where traction, steering, or stability is in question.
- Remove or mark obstructions such as ditches, holes, ruts, bumps, rocks, or other hidden hazards. Tall grass can hide obstructions. Uneven terrain could overturn the machine.
- Be aware that operating the machine on wet grass, across slopes or downhill may cause the machine to lose traction. Loss of traction to the drive wheels may result in sliding and a loss of braking and steering.
- Use extreme caution when operating the machine near drop offs, ditches, embankments, water hazards or other hazards. The machine could suddenly roll over if a wheel goes over the edge or the edge caves in. Establish a safety area between the machine and any hazard.
- Identify hazards at the base of the slope. If there are hazards, mow the slope with a pedestrian-controlled machine.
- If possible, keep the cutting unit(s) lowered to the ground while operating on slopes. Raising the cutting unit(s) while operating on slopes can cause the machine to become unstable.
- Use extreme caution with grass collection systems or other attachments. These can change the stability of the machine and cause a loss of control.

Starting and Shutting off the Engine

Important: **The fuel system automatically bleeds itself when any of the following situations occur:**

- You are starting a new machine for the first time.
- The engine has ceased running due to lack of fuel.
- Maintenance has been performed upon the fuel system components.

Starting the Engine

1. Sit on the seat, keep your foot off the traction pedal so that it is in NEUTRAL, engage the parking brake, set the engine-speed switch to the MIDDLE position, and ensure that the Enable/Disable switch is in the DISABLE position.
2. Remove your foot from the traction pedal and make sure that the pedal is in the NEUTRAL position.
3. Turn the ignition key to the RUN position.
4. When the glow indicator dims, turn the ignition key to the START position. Release the key immediately when the engine starts and allow it to return to the RUN position. Allow the engine to warm up (without load), then move the throttle control to the desired position.

Shutting off the Engine

1. Move all controls to NEUTRAL, engage the parking brake, move the engine-speed switch to the low idle position and allow the engine to reach low idle speed.
2. Turn the key to the OFF position and remove it from the switch.

Cutting Grass with the Machine

Note: Cutting grass at a rate that loads the engine promotes DPF regeneration.

1. Move the machine to the job site and align the machine outside the cutting area for the first cutting pass.
2. Ensure that the PTO switch is set to the DISABLE position.
3. Move the lever for the mow-speed limiter forward.
4. Press the throttle-speed switch to set the engine speed to HIGH IDLE.
5. Use the joystick to lower the cutting units to the ground.
6. Press the PTO switch to prepare cutting units for operation.
7. Use the joystick to raise the cutting units off the ground.
8. Begin moving the machine toward the cutting area and lower the cutting units.

   Note: Cutting grass at a rate that loads the engine promotes DPF regeneration.
9. When you complete the mowing pass, use the joystick to lift the cutting units.
10. Perform a tear-shaped turn to quickly line up for your next pass.

Diesel Particulate Filter Regeneration

The diesel particulate filter (DPF) is part of the exhaust system. The diesel-oxidation catalyst of the DPF reduces harmful gasses and the soot filter removes soot from the engine exhaust.

The DPF regeneration process uses heat from the engine exhaust to incinerate the soot accumulated on the soot filter, converting the soot to ash, and clears the channels of the soot filter so that filtered engine exhaust flows out the DPF.

The engine computer monitors the accumulation of soot by measuring the back pressure in the DPF. If the back pressure is too high, soot is not incinerating in the soot filter through normal engine operation. To keep the DPF clear of soot, remember the following:

- Passive regeneration occurs continuously while the engine is running—run the engine at full engine speed when possible to promote DPF regeneration.
- If the back pressure in the DPF is too high or a reset regeneration has not occurred for 100 hours, the engine computer signals you through the InfoCenter when reset regeneration is running.
- Allow the reset regeneration process to complete before shutting off the engine.

Operate and maintain your machine with the function of the DPF in mind. Engine load at high idle (full throttle) engine speed generally produces adequate exhaust temperature for DPF regeneration.

Important: **Minimize the amount of time that you idle the engine or operate the engine at low-engine speed to help reduce the accumulation of soot in the soot filter.**

DPF Soot Accumulation

- Over time, the diesel particulate filter accumulates soot in the soot filter. The computer for the engine monitors the soot level in the DPF.
- When enough soot accumulates, the computer informs you that it is time to regenerate the DPF.
- DPF regeneration is a process that heats the DPF to convert the soot to ash.
- In addition to the warning messages, the computer reduces the power produced by the engine at different soot-accumulation levels.

Engine Warning Messages—Soot Accumulation

Indication Level	Fault Code	Engine Power Rating	Recommended Action
Level 1: Engine Warning	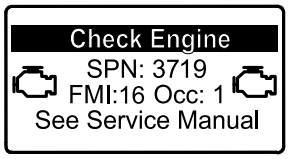 g213866 **Figure 30** Check Engine SPN 3719, FMI 16	The computer de-rates the engine power to 85%.	Perform a parked regeneration as soon as possible; refer to Parked or Recovery Regeneration (page 37).
Level 2: Engine Warning	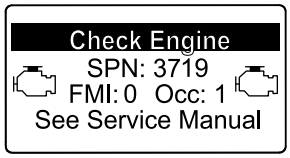 g213867 **Figure 31** Check Engine SPN 3719, FMI 0	The computer de-rates the engine power to 50%.	Perform a recovery regeneration as soon as possible; refer to Parked or Recovery Regeneration (page 37).

DPF Ash Accumulation

- The lighter ash is discharged through the exhaust system; the heavier ash collects in the soot filter.
- Ash is a residue of the regeneration process. Over time, the diesel particulate filter accumulates ash that does not discharge with the engine exhaust.
- The computer for the engine calculates the amount of ash accumulated in the DPF.
- When enough ash accumulates, the engine computer sends information to the InfoCenter in the form of an engine fault to indicate the accumulation of ash in the DPF.
- The fault messages indicate that it is time to service the DPF.
- In addition to the warnings, the computer reduces the power produced by the engine at different ash-accumulation levels.

InfoCenter Advisory and Engine Warning Messages—Ash Accumulation

Indication Level	Fault Code	Engine Speed Reduction	Engine Power Rating	Recommended Action
Level 1: Engine Warning	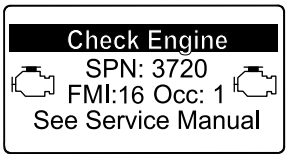 g213863 **Figure 32** Check Engine SPN 3720, FMI 16	None	The computer de-rates the engine power to 85%.	Service the DPF; refer to Servicing the Diesel-Oxidation Catalyst (DOC) and the Soot Filter (page 54)
Level 2: Engine Warning	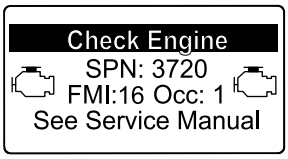 g213863 **Figure 33** Check Engine SPN 3720, FMI 16	None	The computer de-rates the engine power to 50%.	Service the DPF; refer to Servicing the Diesel-Oxidation Catalyst (DOC) and the Soot Filter (page 54)
Level 3: Engine Warning	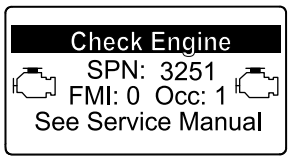 g214715 **Figure 34** Check Engine SPN 3251, FMI 0	Engine speed at maximum torque + 200 rpm	The computer de-rates the engine power to 50%.	Service the DPF; refer to Servicing the Diesel-Oxidation Catalyst (DOC) and the Soot Filter (page 54)

Types of Diesel Particulate Filter Regeneration

Types of diesel particulate filter regeneration that are performed while the machine is operating:

Type of Regeneration	Conditions that cause DPF regeneration	DPF description of operation
Passive	Occurs during normal operation of the machine at high-engine speed or high-engine load	• The InfoCenter does not display an icon indicating passive regeneration. • During passive regeneration, the DPF processes high-heat exhaust gasses, oxidizing harmful emissions, and burning soot to ash. Refer to Passive DPF Regeneration (page 34).
Assist	Occurs because of low-engine speed, low-engine load, or after the computer detects the DPF is becoming obstructed with soot	• The InfoCenter does not display an icon indicating assist regeneration. • During assist regeneration, the engine computer adjusts the engine settings to raise the exhaust temperature. Refer to Assist DPF Regeneration (page 35).
Reset	Occurs every 100 hours Also occurs after assist regeneration only if the computer detects that assist regeneration did not sufficiently reduce the soot level	• When the high exhaust-temperature icon is displayed in the InfoCenter, a regeneration is in progress. • During reset regeneration, the engine computer adjusts the engine settings to raise the exhaust temperature. Refer to Reset Regeneration (page 35).

Types of diesel particulate filter regeneration that require you to park the machine:

Type of Regeneration	Conditions that cause DPF regeneration	DPF description of operation
Parked	Occurs because the computer detects back pressure in the DPF due to soot buildup Also occurs because the operator initiates a parked regeneration May occur because you set the InfoCenter to inhibit reset regeneration and continued operating the machine, adding more soot when the DPF already needs a reset regeneration May result from using the incorrect fuel or engine oil	• When the reset-standby/parked or recovery regeneration icon or ADVISORY #188 displays in the InfoCenter, a regeneration is requested. • Perform the parked regeneration as soon as possible to avoid needing a recovery regeneration. • A parked regeneration requires 30 to 60 minutes to complete. • You must have at least a 1/4 tank of fuel in the tank. • You must park the machine to perform a parked regeneration. Refer to Parked or Recovery Regeneration (page 37).

Types of diesel particulate filter regeneration that require you to park the machine: (cont'd.)

Type of Regeneration	Conditions that cause DPF regeneration	DPF description of operation
Recovery	Occurs because the operator ignored requests for a parked regeneration and continued operating the machine, adding more soot to the DPF	• When the reset-standby/parked or recovery regeneration icon or ADVISORY #190 displays in the InfoCenter, a recovery regeneration is requested. • A recovery regeneration requires up to 3 hours to complete. • You must have at least a 1/2 tank of fuel in the machine. • You must park the machine to perform a recovery regeneration. Refer to Parked or Recovery Regeneration (page 37).

Accessing the DPF Regeneration Menus

Accessing the DPF Regeneration Menus

1. Access the Service menu, press the center button to scroll down to the DPF REGENERATION option (Figure 35).

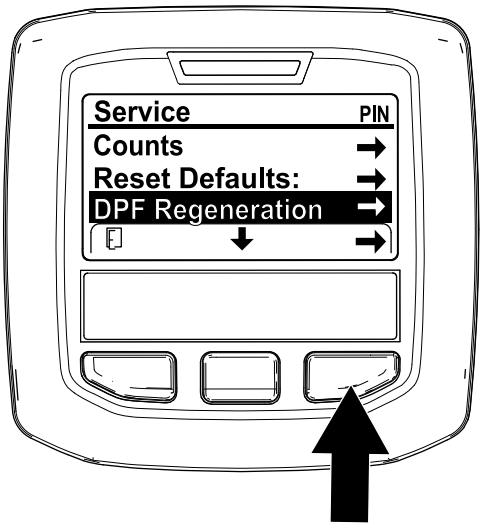

g227667

Figure 35

2. Press the right button to select the DPF Regeneration entry (Figure 35).

Time Since Last Regeneration

Access the DPF Regeneration menu, press the center button to scroll down to the LAST REGEN field (Figure 36).

Use the LAST REGEN field to determine how many hours you have run the engine since the last reset, parked, or recovery regeneration.

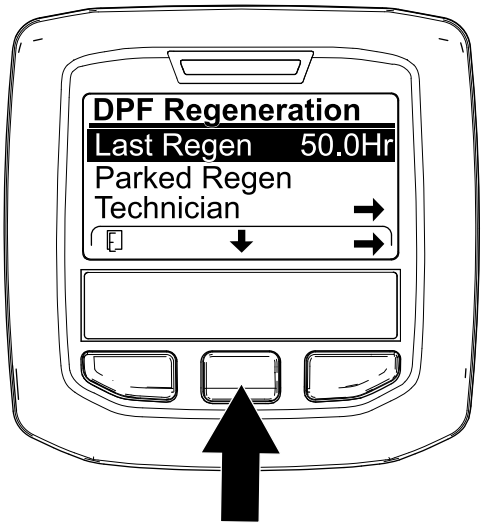

g224693

Figure 36

Technician Menu

Important: **For operating convenience, you may decide to perform a parked regeneration before the soot load reaches 100%, provided the engine has run more than 50 hours since the last successful reset, parked, or recovery regeneration.**

Use the technician menu to view the current state of engine regeneration control and view the reported soot level.

Access the DPF Regeneration menu, press the center button to scroll down to the TECHNICIAN option, and

press the right button to select the Technician entry (Figure 37).

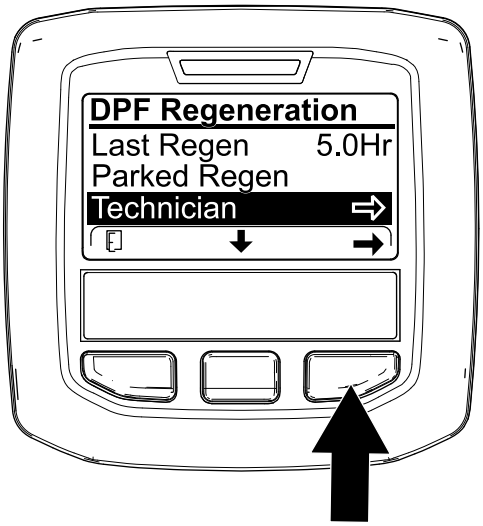

g227348

Figure 37

- Use the DPF operation table to understand the current state of DPF operation (Figure 38).

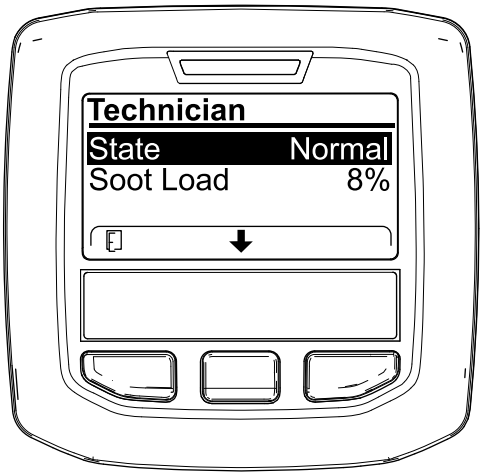

g227360

Figure 38

.

DPF Operation Table

State	Description	
Normal	The DPF is in normal-operating mode—passive regeneration.	
Assist Regen	The engine computer is performing an assist regeneration.	
Reset Stby	The engine computer is trying to run a reset regeneration, but 1 of the following conditions prevents regeneration:	The regen inhibit setting is set to ON.
		The exhaust temperature is too low for regeneration.

DPF Operation Table (cont'd.)

State	Description
Reset Regen	The engine computer is running a reset regeneration.
Parked Stby	The engine computer is requesting that you run a parked regeneration.
Parked Regen	You initiated a parked regeneration request and the engine computer is processing the regeneration.
Recov. Stby	The engine computer is requesting that you run a recovery regeneration.
Recov. Regen	You initiated a recovery regeneration request and the engine computer is processing the regeneration.

- View the soot load which is measured as the percentage of soot in the DPF(Figure 39); refer to the soot-load table.

  Note: The soot load value varies as the machine is operated and DPF regeneration occurs.

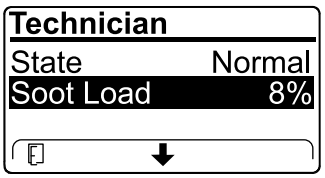

g227359

Figure 39

Soot-Load Table

Important Soot Load Values	Regeneration State
0% to 5%	Minimum soot load range
78%	The engine computer performs an assist regeneration.
100%	The engine computer automatically requests a parked regeneration.
122%	The engine computer automatically requests a recovery regeneration.

Passive DPF Regeneration

- Passive regeneration occurs as part of normal engine operation.
- While operating the machine, run the engine at full-engine speed and high load when possible to promote DPF regeneration.

Assist DPF Regeneration

- The engine computer adjusts engine settings to raise the exhaust temperature.
- While operating the machine, run the engine at full engine speed and high load when possible to promote DPF regeneration.

Reset Regeneration

⚠ CAUTION

The exhaust temperature is hot (approximately 600°C (1,112°F) during DPF regeneration. Hot exhaust gas can harm you or other people.

- **Never operate the engine in an enclosed area.**
- **Make sure that there are no flammable materials around the exhaust system.**
- **Never touch a hot exhaust system component.**
- **Never stand near or around the exhaust pipe of the machine.**

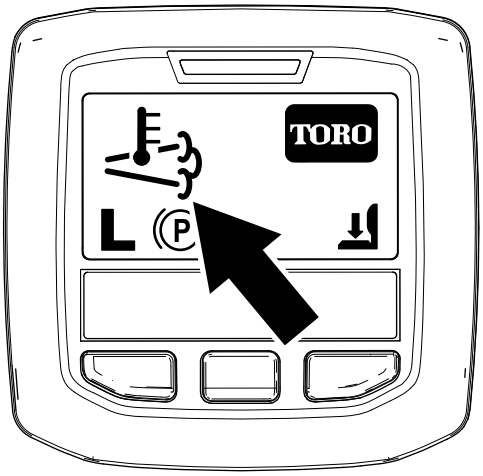

g224417

Figure 40

- The high exhaust-temperature icon displays in the InfoCenter (Figure 40).
- The engine computer adjusts engine settings to raise the exhaust temperature.

  Important: **The high exhaust-temperature icon indicates that the exhaust temperature discharged from of your machine may be hotter than during regular operation.**
- While operating the machine, run the engine at full engine speed and high load when possible to promote DPF regeneration.
- The icon displays in the InfoCenter while the reset regeneration is processing.
- Whenever possible, do not shut off the engine or reduce engine speed while the reset regeneration is processing.

  Important: **Whenever possible, allow the machine to complete the reset regeneration process before shutting off the engine.**

Periodic Reset Regeneration

If the engine has not completed a successful Reset, Parked, or Recovery regeneration in the previous 100 hours of engine operation, the engine computer will attempt to perform a reset regeneration.

Setting the Inhibit Regen

Reset Regeneration Only

Note: If you set the InfoCenter to inhibit regeneration, the InfoCenter displays ADVISORY #185 (Figure 41) every 15 minutes while the engine requests a reset regeneration.

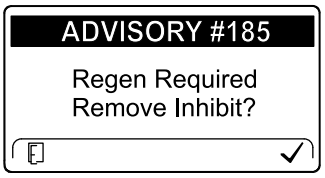

g224692

Figure 41

A reset regeneration produces the elevated engine exhaust. If you are operating the machine around trees, brush, tall grass, or other temperature-sensitive plants or materials, you can use the Inhibit Regen setting to prevent the engine computer from performing a reset regeneration.

Important: **When you shut off the engine and start it again, the inhibit regen setting defaults to OFF.**

1. Access the DPF Regeneration menu, press the center button to scroll down to the INHIBIT REGEN option, and press the right button to select the Inhibit Regen entry (Figure 42).

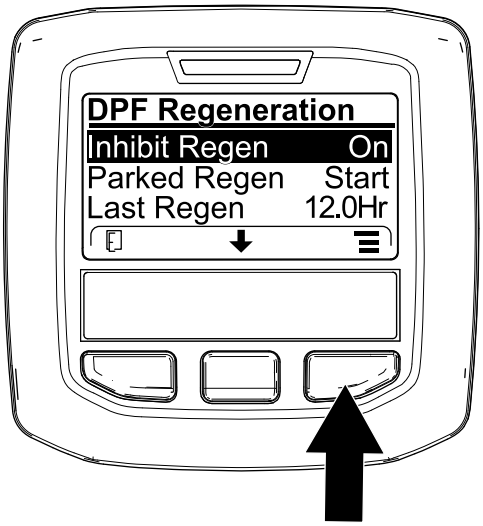

g227304

Figure 42

2. Press the right button to change the inhibit regeneration setting from On to Off (Figure 42) or from Off to On (Figure 43).

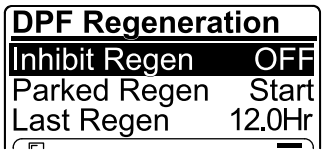

g224691

Figure 43

Allowing a Reset Regeneration

The InfoCenter displays the high exhaust-temperature icon when the reset regeneration is in process.

Note: If INHIBIT REGEN is set to ON, the InfoCenter displays ADVISORY #185 (Figure 44). Press button 3 to set inhibit regeneration setting to OFF and continue with the reset regeneration.

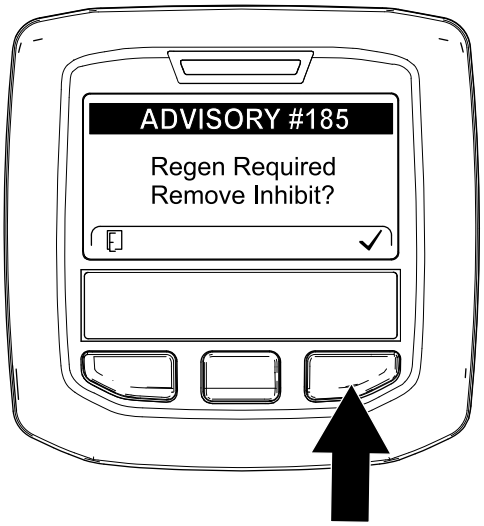

g224394

Figure 44

Note: If the engine exhaust temperature is too low, the InfoCenter displays ADVISORY #186 (Figure 45) to inform you to set the engine to full throttle (high idle).

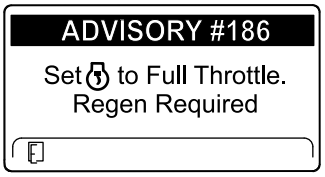

g224395

Figure 45

Note: When the reset regeneration completes, the high exhaust-temperature disappears from the InfoCenter screen.

Parked or Recovery Regeneration

- When the engine computer requests either a parked regeneration or a recovery regeneration, the regeneration request icon (Figure 46) displays in the InfoCenter.

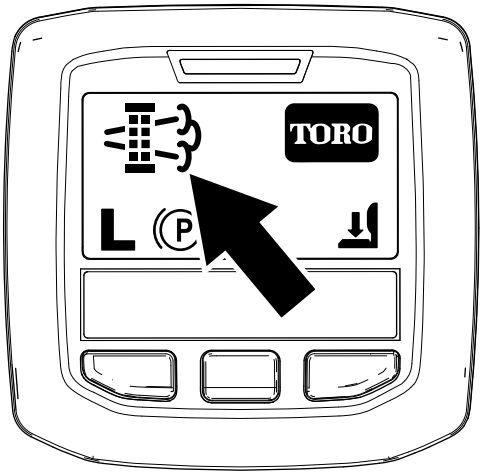

g224404

Figure 46

- The machine does not automatically perform a parked regeneration or a recovery regeneration, you must run the regeneration through the InfoCenter.

Parked Regeneration Messages

When a parked regeneration is requested by the engine computer the following messages display in the InfoCenter:

- Engine warning SPN 3720, FMI 16 (Figure 47)

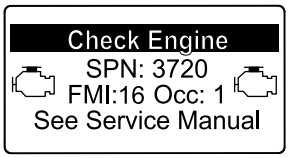

g213863

Figure 47

- Parked regeneration required ADVISORY #188 (Figure 48)

  Note: Advisory #188 displays every 15 minutes.

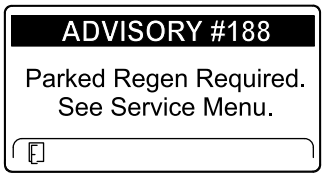

g224397

Figure 48

- If you do not perform a parked regeneration within 2 hours, the InfoCenter displays parked regeneration required—power takeoff disabled ADVISORY #189 (Figure 49).

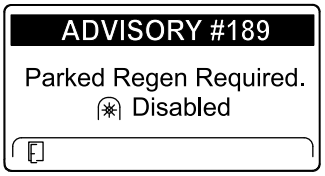

g224398

Figure 49

Important: **Perform a parked regeneration to restore the PTO function; refer to Preparing to Perform a Parked or Recovery Regeneration (page 38) and Performing a Parked or Recovery Regeneration (page 38).**

Note: The Home screen displays the PTO disabled Icon (Figure 50).

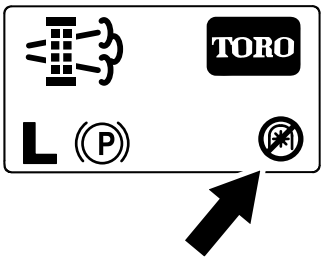

g224415

Figure 50

Recovery Regeneration Messages

When a recovery regeneration is requested by the engine computer, the following messages display in the InfoCenter:

- Engine warning SPN 3719, FMI 0 (Figure 51)

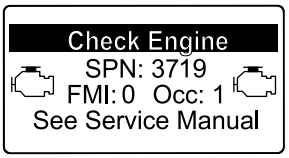

g213867

Figure 51

- Recovery regeneration required—power takeoff disabled ADVISORY #190 (Figure 52)

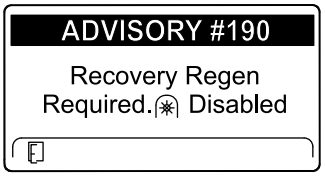

g224399

Figure 52

Important: **Perform a recovery regeneration to restore the PTO function; refer to Preparing to Perform a Parked or Recovery Regeneration (page 38) and Performing a Parked or Recovery Regeneration (page 38).**

Note: The Home screen displays the PTO disabled Icon; refer to Figure 50 in Parked Regeneration Messages (page 37).

DPF Status-Limitation

- If the engine computer requests a recovery regeneration or is processing a recovery regeneration and you scroll down to the PARKED REGEN option, parked regeneration locks and the lock icon (Figure 53) appears in the lower right corner of the InfoCenter.

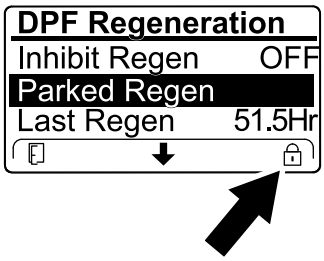

g224625

Figure 53

- If the engine computer has not requested a recovery regeneration and you scroll down to the RECOVERY REGEN option, the recovery regeneration locks and the lock icon (Figure 54) appears in the lower right corner of the InfoCenter.

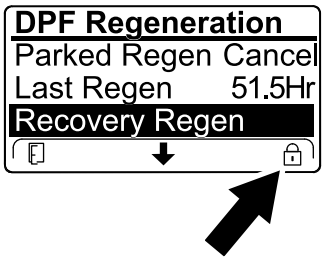

g224628

Figure 54

Preparing to Perform a Parked or Recovery Regeneration

1. Ensure that the machine has fuel in the tank for the type of regeneration you are performing:
   - **Parked Regeneration:** Ensure that you have 1/4 tank of fuel before performing the parked regeneration.
   - **Recovery Regeneration:** Ensure that you have 1/2 tank of fuel before performing the recovery regeneration.
2. Move the machine outside to an area away from combustible materials.
3. Park the machine on a level surface.
4. Ensure that the traction control or motion-control levers are in the NEUTRAL position.
5. If applicable, shut off the PTO, and lower the cutting units or accessories.
6. Engage the parking brake.
7. Set the throttle to the low IDLE position.

Performing a Parked or Recovery Regeneration

⚠ CAUTION

The exhaust temperature is hot (approximately 600°C (1,112°F) during DPF regeneration. Hot exhaust gas can harm you or other people.

- **Never operate the engine in an enclosed area.**
- **Make sure that there are no flammable materials around the exhaust system.**
- **Never touch a hot exhaust system component.**
- **Never stand near or around the exhaust pipe of the machine.**

Important: **The computer of the machine cancels DPF regeneration if you increase the engine speed from low idle or release the parking brake.**

1. Access the DPF Regeneration menu, press the center button to scroll down to either the PARKED REGEN START option or the RECOVERY REGEN START option (Figure 55), and press the right button to select the start the regeneration (Figure 55).

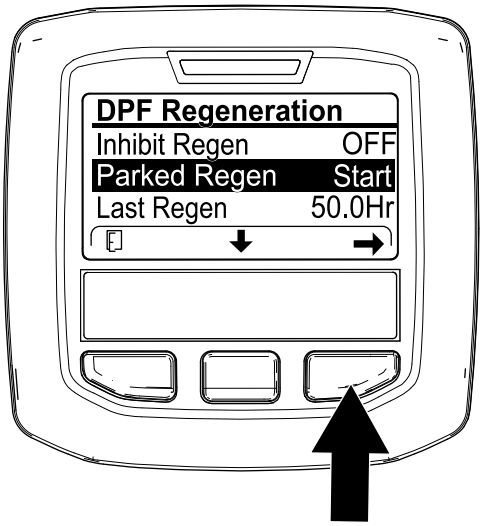

g224402

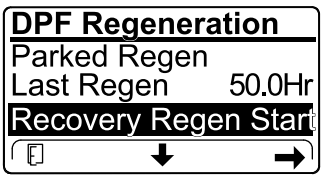

g224629

Figure 55

2. At the VERIFY FUEL LEVEL screen, verify that you have 1/4 tank of fuel if you are performing the parked regeneration or 1/2 tank of fuel if you are performing the recovery regeneration, and press the right button to continue (Figure 56).

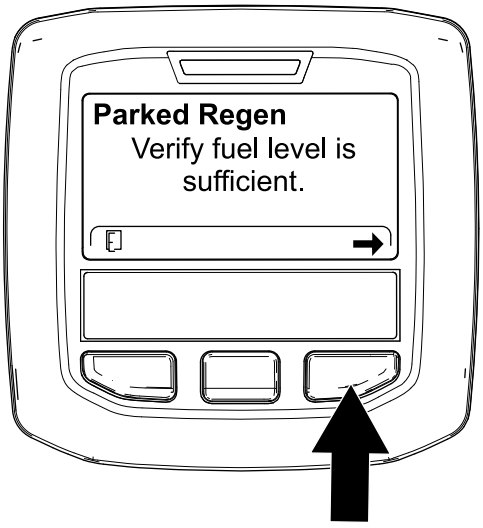

g224414

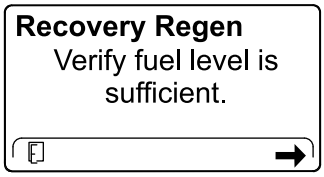

g227678

Figure 56

3. At the DPF checklist screen, verify that the parking brake is engaged and that the engine speed is set to low idle (Figure 57).

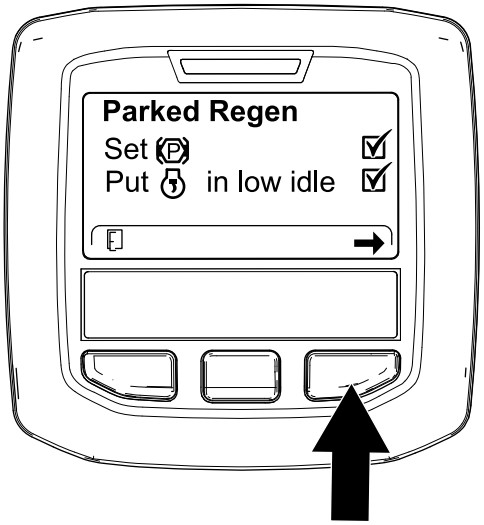

g224407

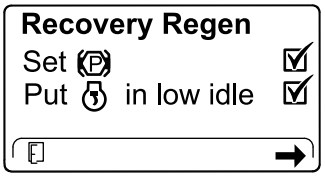

g227679

Figure 57

4. At the INITIATE DPF REGEN screen, press the right button to continue (Figure 58).

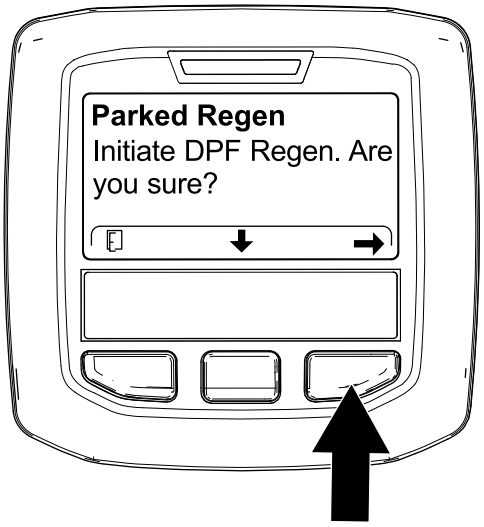

g224626

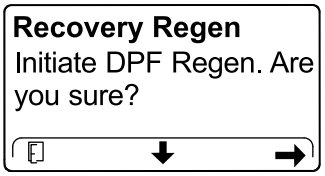

g224630

Figure 58

5. The InfoCenter displays the INITIATING DPF REGEN message (Figure 59).

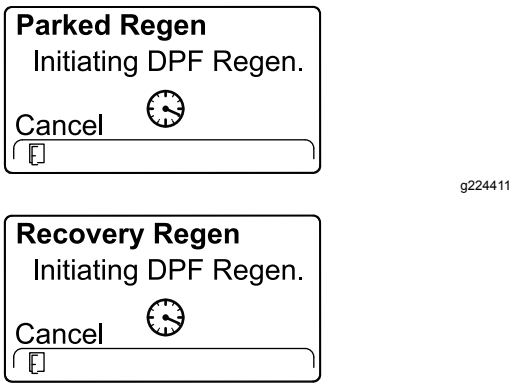

Figure 59

6. The InfoCenter displays the time to complete message (Figure 60).

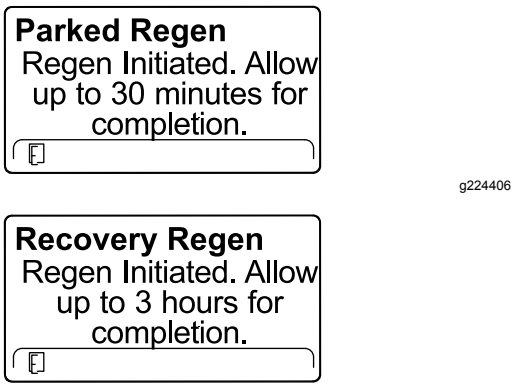

Figure 60

7. The engine computer checks the engine state and fault information. The InfoCenter may display the following messages found in the table that follows:

Check Message and Corrective Action Table

Parked Regen Regen refused: 50 hour limit.	
Corrective Action: Exit the regeneration menu and run the machine until the time since last regeneration is greater than 50 hours; refer to Time Since Last Regeneration (page 33).	
Parked Regen Regen refused active engine faults.	**Recovery Regen** Regen refused active engine faults.
Corrective Action: Troubleshoot the engine fault and retry DPF regeneration.	

Check Message and Corrective Action Table (cont'd.)

Parked Regen must be running	**Recovery Regen** must be running
Corrective Action: Start and run the engine.	
Parked Regen Ensure is running and above 60C/140F.	**Recovery Regen** Ensure is running and above 60C/140F.
Corrective Action: Run the engine to warm the coolant temperature to 60°C (140°F).	
Parked Regen Put in low idle.	**Recovery Regen** Put in low idle.
Corrective Action: Change the engine speed to low idle.	
Parked Regen Regen refused by ECU.	**Recovery Regen** Regen refused by ECU.
Corrective Action: Troubleshoot the engine computer condition and retry DPF regeneration.	

8. The InfoCenter displays the home screen and the regeneration acknowledge icon (Figure 61) appears in the lower right corner of the screen as the regeneration processes.

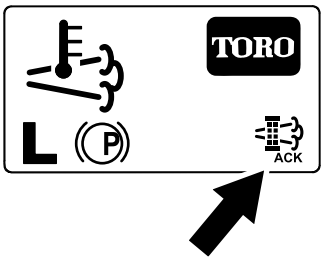

Figure 61

Note: While the DPF regeneration runs, the InfoCenter displays the high exhaust-temperature icon .

9. When the engine computer completes a parked or recovery regeneration, the InfoCenter

displays ADVISORY #183 (Figure 62). Press the left button to exit to the home screen.

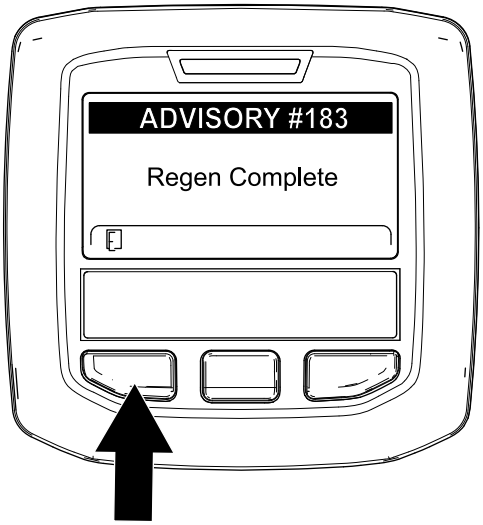

g224392

Figure 62

Note: If the regeneration fails to complete, the InfoCenter displays Advisory #184 (Figure 62). Press the left button to exit to the home screen.

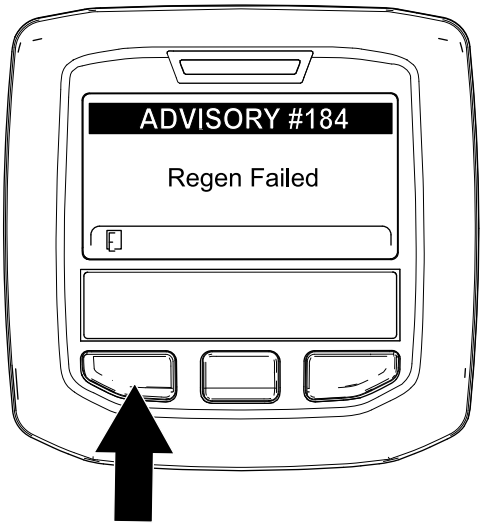

g224393

Figure 63

Canceling a Parked or Recovery Regeneration

Use the Parked Regen Cancel or Recovery Regen Cancel setting to cancel a running parked or recovery regeneration process.

1. Access the DPF Regeneration menu (Figure 64).

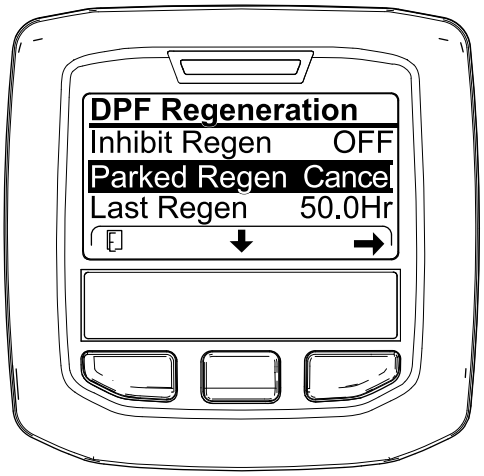

g227305

Figure 64

2. Press the center button to scroll down to the PARKED REGEN CANCEL (Figure 64) or the RECOVERY REGEN CANCEL option (Figure 65).

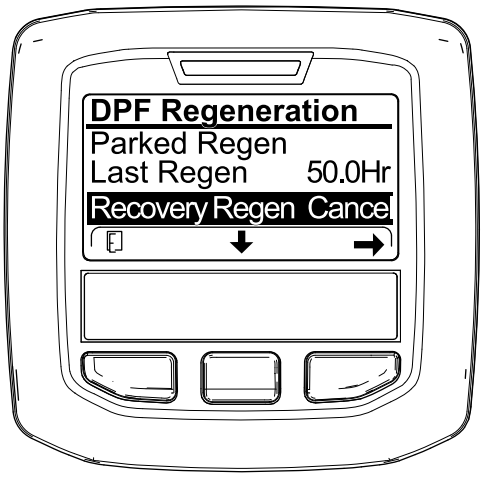

g227306

Figure 65

3. Press the right button to select the Regen Cancel entry (Figure 64 or Figure 65).

Adjusting the Lift-Arm Counterbalance

You can adjust the counterbalance on the rear cutting-unit lift arms to compensate for different turf conditions and to maintain a uniform height of cut in the rough conditions or in areas of thatch buildup.

You can adjust each counterbalance spring to 1 of 4 settings. Each increment increases or decreases counterbalance on the cutting unit by 2.3 kg (5 lb). You can position the springs on the back side of the first spring actuator to remove all counter balance (fourth position).

1. Park the machine on a level surface, lower the cutting units, engage the parking brake, shut off the engine, and remove the key.
2. Insert a tube or similar object onto the long spring end and pivot it around the spring actuator to the desired position (Figure 66).

⚠ CAUTION

The springs are under tension and could cause personal injury.

Use caution when adjusting the springs.

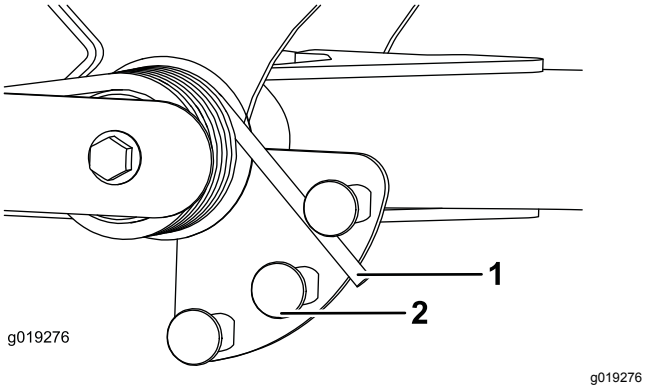

Figure 66

1. Spring
2. Spring actuator

3. Repeat the procedure on the other spring.

Adjusting the Lift-Arm Turnaround Position

1. Park the machine on a level surface, lower the cutting units, engage the parking brake, shut off the engine, and remove the key.
2. The lift-arm switch is located underneath the hydraulic tank behind the front, right lift arm (Figure 67).
3. Loosen the switch-mounting screws and move the switch down to increase the lift-arm turnaround height or move the switch up to decrease the lift-arm turnaround height (Figure 67).

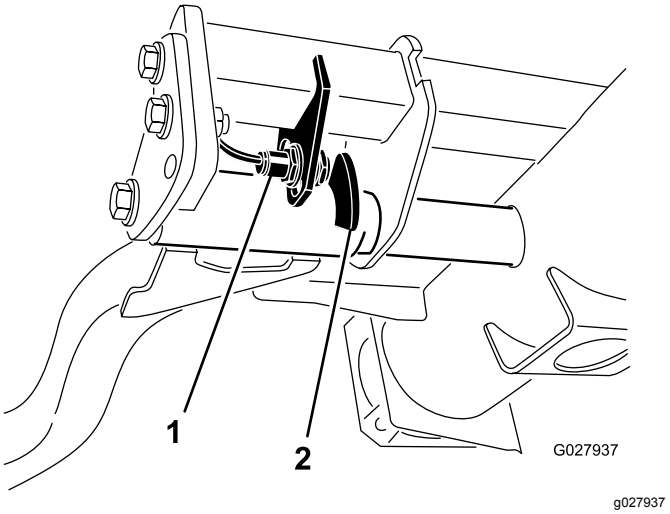

Figure 67

1. Switch
2. Lift-arm sensing device

4. Tighten the mounting screws.

Pushing or Towing the Machine

In an emergency, you can move the machine by actuating the bypass valve in the variable displacement hydraulic pump and pushing or towing the machine.

Important: **Do not push or tow the machine faster than 3 to 4.8 km/h (2 to 3 mph) because internal transmission damage may occur. The bypass valve must be open whenever you push or tow the machine.**

1. Rotate the bypass-valve bolt 1-1/2 turns to open and allow oil to bypass internally (Figure 68).

   Note: The bypass valve is located on the left side of the hydrostat. By bypassing the fluid, you can move the machine slowly without damaging the transmission.

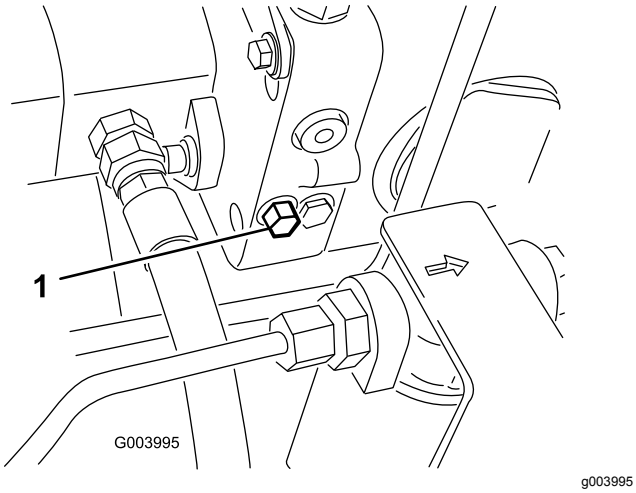

Figure 68

1. Bypass-valve bolt

2. Close the bypass valve before starting the engine. However, do not exceed 7 to 11 N·m (5 to 8 ft-lb) torque to close the valve.

   Important: **Running the engine with the bypass valve open causes the transmission to overheat.**

Hauling the Machine

- Use care when loading or unloading the machine into or out of a trailer or a truck.
- Use a full-width ramp for loading or unloading the machine into or out of a trailer or a truck.
- Tie the machine down securely. Both front and rear straps should be directed down and outward from the machine; refer to Figure 69 and Figure 70.
  - Front—the hole in the rectangular pad, under the axle tube, inside each front tire (Figure 69)

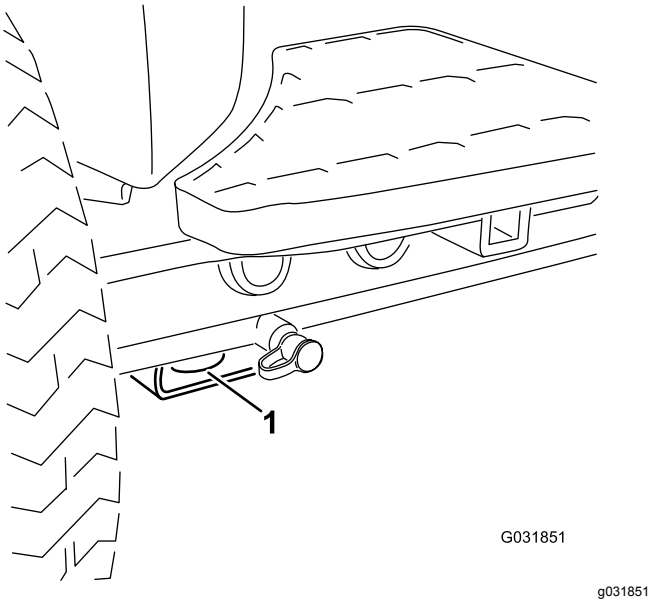

Figure 69

1. Front tie-down

  - Rear—each side of the machine on the rear frame (Figure 70)

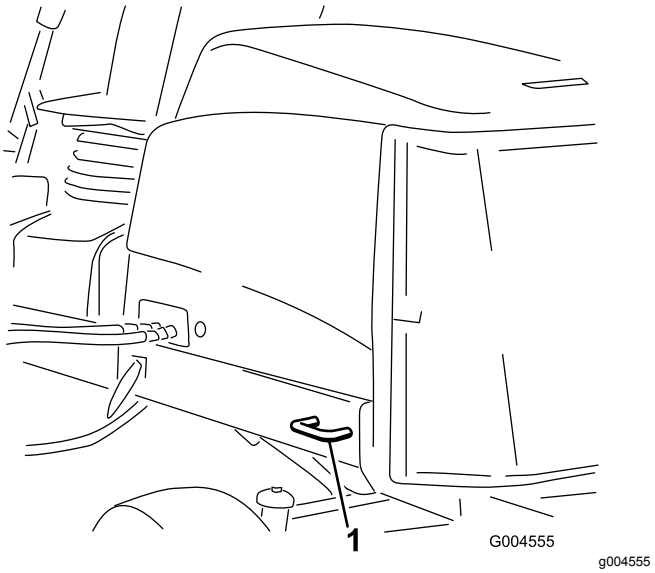

Figure 70

1. Rear tie-down

Jacking Points

Note: Use jack stands to support the machine when required.

- Front—rectangular pad, under the axle tube, inside each front tire (Figure 71).

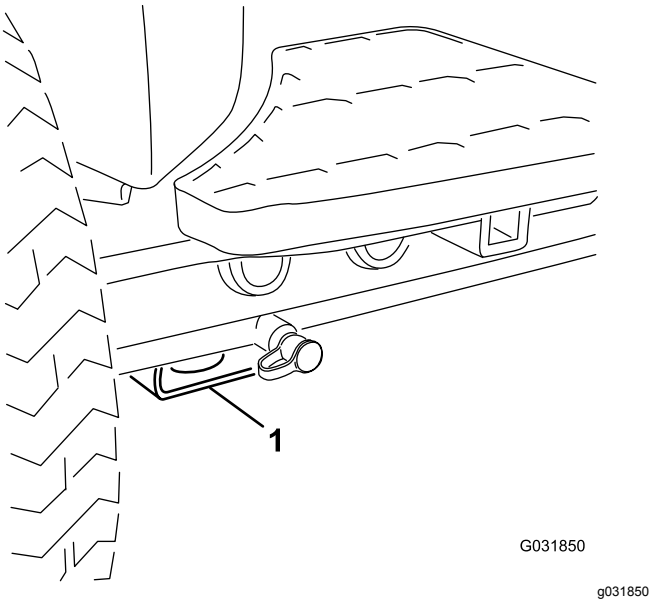

Figure 71

1. Front jacking point

- Rear—rectangular axle tube on the rear axle.

Understanding the Diagnostic Light

The machine is equipped with a diagnostic light, which indicates if the machine detects a malfunction. The diagnostic light is located on the InfoCenter, above the display screen (Figure 72). When the machine is functioning properly and the key switch is moved to the ON/RUN position, the diagnostic light turns on briefly to indicate that the light is working properly. When a machine advisory message appears, the light illuminates when the message is present. When a fault message appears, the light blinks until the fault is resolved.

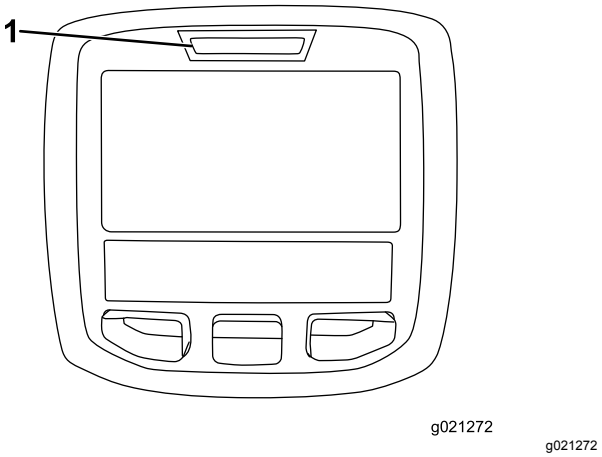

Figure 72

1. Diagnostic light

Checking the Interlock Switches

The purpose of the interlock switches is to prevent the engine from cranking or starting unless the traction pedal is in the NEUTRAL position, the Enable/Disable switch is in the DISABLE position, and the Lower Mow/Raise control is in the NEUTRAL position. In addition, the engine should stop when you press the traction pedal while you are off the seat or if the parking brake is engaged.

⚠ CAUTION

If the safety-interlock switches are disconnected or damaged, the machine could operate unexpectedly, causing personal injury.

- **Do not tamper with the interlock switches.**
- **Check the operation of the interlock switches daily and replace any damaged switches before operating the machine.**

Verifying the Interlock-Switch Function

Service Interval: Before each use or daily

1. Park the machine on a level surface, lower the cutting units, shut off the engine, engage the parking brake, and remove the key from the ignition switch.
2. Turn the key in the ignition switch to the ON position, but do not start the machine.
3. Locate the appropriate switch function in the diagnostics menu on the InfoCenter.
4. Individually, change each of the switches from open to closed (i.e., sit on seat, engage traction pedal, etc.), and note that the appropriate state of the switch changes.

   Note: Repeat this for all switches that you can change by hand.
5. If a switch is closed and the appropriate indicator does not change, check all wiring and connections to the switch and/or check the switches with an ohm meter.

   Note: Replace any faulty switches and repair any faulty wiring.

Note: The InfoCenter display also has the ability to detect which output solenoids or relays are turned on. This is a quick way to determine if a machine malfunction is electrical or hydraulic.

Verifying the Output Function

1. Park the machine on a level surface, lower the cutting units, shut off the engine, engage the parking brake, and remove the key from the ignition switch.
2. Turn the key in the ignition switch to the ON position and start the machine.
3. Locate the appropriate output function in the diagnostics menu on the InfoCenter.
4. Sit on the seat and attempt to operate the desired function of the machine.

Note: The appropriate outputs should change state to indicate that the ECM is turning on that function.

If the correct outputs do not illuminate, verify that the required input switches are in the necessary positions to allow that function to occur. Verify the correct switch function.

If the output displays are on as specified, but the machine does not function properly, this indicates a non-electrical problem. Repair the machine as necessary.

After Operation Safety

- Clean grass and debris from the cutting units, mufflers, and engine compartment to help prevent fires. Clean up oil or fuel spills.
- If the cutting units are in the transport position, use the positive mechanical lock (if available) before you leave the machine unattended.
- Allow the engine to cool before storing the machine in any enclosure.
- Shut off the fuel before storing or transporting the machine.
- Never store the machine or fuel container where there is an open flame, spark, or pilot light, such as on a water heater or on other appliances.
- Keep all parts of the machine in good working condition and all hardware tightened, especially blade-attachment hardware.
- Replace all worn or damaged decals.

Hauling the Machine

- Use full-width ramps for loading the machine onto a trailer or truck.
- Tie the machine down securely.

Hydraulic-Valve Solenoid Functions

Use the list below to identify and describe the different functions of the solenoids in the hydraulic manifold. Each solenoid must be energized to allow the function to occur.

Solenoid	Function
SP2	Front reel circuit
SP1	Rear reel circuit
SVRV	Lift/lower cutting units
SV1	Lift/lower front cutting units
SV3	Lift/lower rear cutting units
SV2	Raise any cutting units

Operating Tips

Becoming Familiarized with the Machine

Before mowing grass, practice operating the machine in an open area. Start and shut off the engine. Operate in forward and reverse. Lower and raise the cutting units and engage and disengage the reels. When you feel familiar with the machine, practice operating up and down slopes at different speeds.

Understanding the Warning System

If a warning light comes on during operation, stop the machine immediately and correct the problem before continuing operation. Serious damage could occur if you operate the machine with a malfunction.

Mowing

Start the engine and move the engine-speed switch to the FAST position. Move the Enable/Disable switch to the ENABLE position and use the Lower Mow/Raise lever to control the cutting units (the front cutting units are timed to lower before the rear cutting units). To move forward and cut grass, press the traction pedal forward.

Transporting the Machine

Move the Enable/Disable switch to the DISABLE position and raise the cutting units to the TRANSPORT position. Move the Mow/Transport lever to the TRANSPORT position. Be careful when driving between objects so you do not accidentally damage the machine or cutting units. Use extra care when operating the machine on slopes. Drive slowly and avoid sharp turns on slopes to prevent rollovers. Lower the cutting units when going downhill for steering control.

Maintenance

Note: Determine the left and right sides of the machine from the normal operating position.

Recommended Maintenance Schedule(s)

Maintenance Service Interval	Maintenance Procedure
After the first hour	• Torque the wheel lug nuts to 94 to 122 N·m (70 to 90 ft-lb).
After the first 10 hours	• Torque the wheel lug nuts to 94 to 122 N·m (70 to 90 ft-lb). • Check the alternator-belt tension.
Before each use or daily	• Check the cooling system. • Check the hydraulic-fluid level. • Check the reel-to-bedknife contact. • Check the operation of the interlock switches. • Check the engine-oil level. • Drain water or other contaminants from water separator. • Remove debris from the screen and radiator/oil cooler. (More frequently in dirty operating conditions). • Check the hydraulic lines and hoses.
Every 50 hours	• Grease the bearings and bushings (and immediately after every washing). • Clean the battery and check the condition of it (or weekly, whichever comes first). • Check the battery-cable connections.
Every 100 hours	• Inspect the cooling-system hoses. • Check the alternator-belt tension.
Every 250 hours	• Torque the wheel lug nuts to 94 to 122 N·m (70 to 90 ft-lb). • Change the engine oil and filter.
Every 400 hours	• Service the air cleaner. Service the air cleaner earlier if the service indicator shows red. Service it more frequently in extremely dirty or dusty conditions. • Replace the fuel-filter canister. • Replace the engine fuel filter. • Check the fuel lines and connections for deterioration, damage, or loose connections. (Or yearly, whichever comes first).
Every 800 hours	• Check the rear wheel toe-in. • Change the hydraulic fluid. • Change the hydraulic filters. (Or more often if the service-interval indicator is in the red zone). • Pack the rear wheel bearings.
Every 6,000 hours	• Disassemble, clean, and assemble the soot filter of the DPF or clean the soot filter if engine faults SPN 3251 FMI 0, SPN 3720 FMI 0, or SPN 3720 FMI 16 display in the InfoCenter.
Every 2 years	• Flush and replace the cooling-system fluid. • Drain and flush the hydraulic tank. • Replace all moving hoses.

Daily Maintenance Checklist

Duplicate this page for routine use.

Maintenance Check Item	For the week of:						
	Mon.	Tues.	Wed.	Thurs.	Fri.	Sat.	Sun.
Check the safety-interlock operation.							
Check the brake operation.							
Check the engine oil and fuel level.							
Drain the water/fuel separator.							
Check the air-filter-restriction indicator.							
Check the radiator and screen for debris.							
Check unusual engine noises.[1]							
Check unusual operating noises.							
Check the hydraulic-system-oil level.							
Check the hydraulic-filter indicator. [2]							
Check hydraulic hoses for damage.							
Check for fluid leaks.							
Check the tire pressure.							
Check the instrument operation.							
Check the reel-to-bedknife adjustment.							
Check the height-of-cut adjustment.							
Check all grease fittings for lubrication. [3]							
Touch-up damaged paint.							

1. Check the glow plug and injector nozzles if hard starting, excess smoking, or rough running is noted.
2. Check with the engine running and the oil at operating temperature.
3. Immediately after every washing, regardless of the interval listed

Notation for Areas of Concern

Inspection performed by:

Item	Date	Information
1		
2		
3		
4		
5		
6		
7		
8		

Important: **Refer to your engine owner's manual for additional maintenance procedures.**

Note: To obtain an electrical schematic or a hydraulic schematic for your machine, visit www.Toro.com.

Service Interval Chart

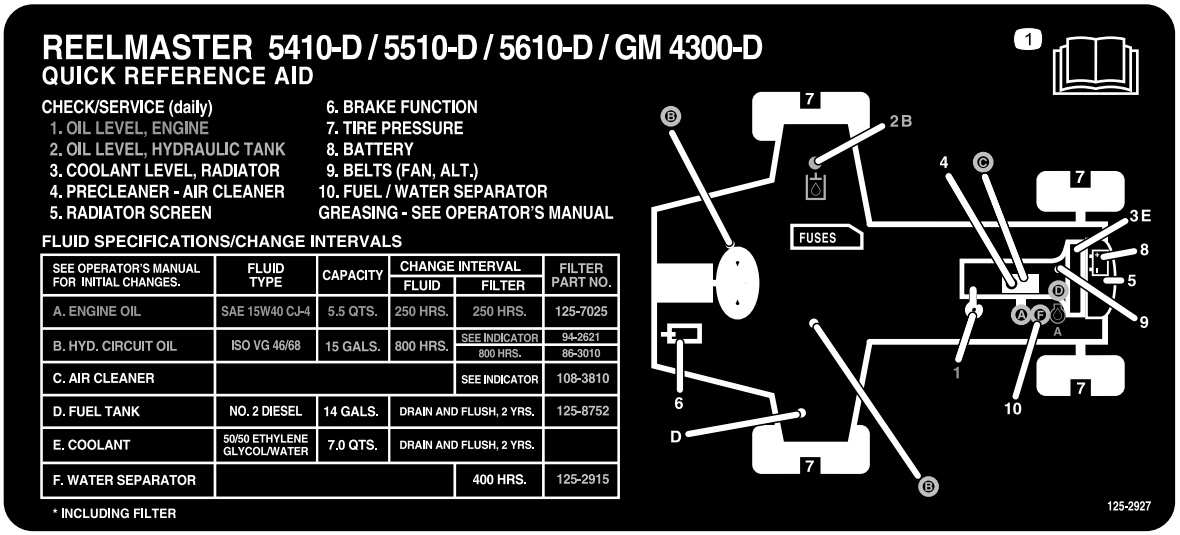

decal125-2927

Figure 73

⚠ CAUTION

If you leave the key in the ignition switch, someone could accidently start the engine and seriously injure you or other bystanders.

Remove the key from the ignition switch before you perform any maintenance.

Pre-Maintenance Procedures

Pre-Maintenance Safety

- Before adjusting, cleaning, repairing, or leaving the machine, do the following:
  - Park the machine on a level surface.
  - Move the throttle switch to the low-idle position.
  - Disengage the cutting units.
  - Lower the cutting units.
  - Ensure that the traction is in neutral.
  - Engage the parking brake.
  - Shut off the engine and remove the key.
  - Wait for all moving parts to stop.
  - Allow machine components to cool before performing maintenance.
- If possible, do not perform maintenance while the engine is running. Keep away from moving parts.
- Use jack stands to support the machine or components when required.
- Carefully release pressure from components with stored energy.

Lubrication

Greasing the Bearings and Bushings

Service Interval: Every 50 hours (and immediately after every washing).

Lubricate all grease fittings for the bearings and bushings with No. 2 lithium grease.

The grease fitting locations and quantities are as follows:

- Pump driveshaft (3) (Figure 74)

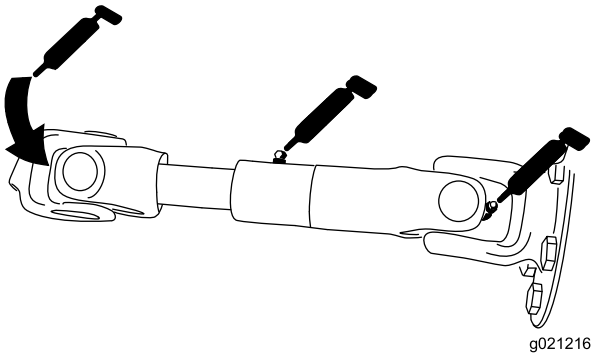

g021216

Figure 74

- Cutting-unit lift-arm cylinders (2 each) (Figure 75)

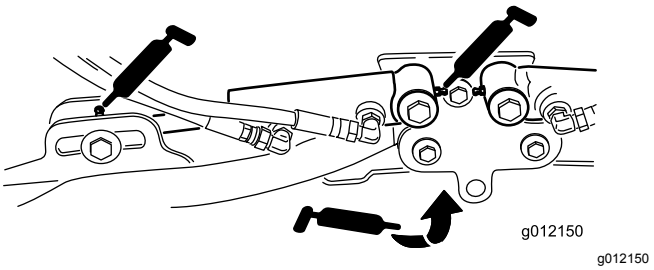

Figure 75

- Lift-arm pivots (1 each) (Figure 75)
- Cutting-unit carrier-frame and pivot (2 each) (Figure 76)

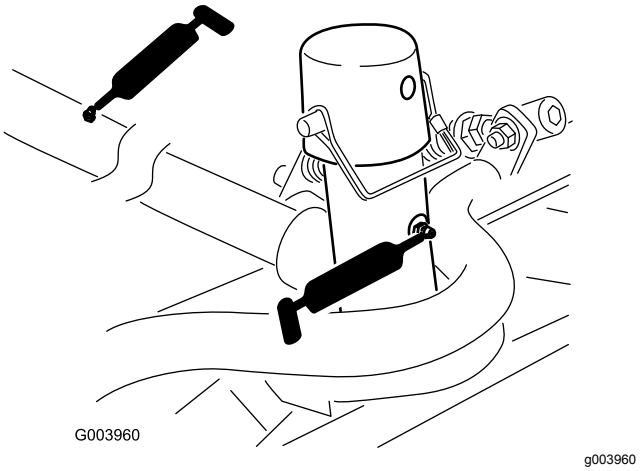

Figure 76

- Lift-arm-pivot shaft (1 each) (Figure 77)

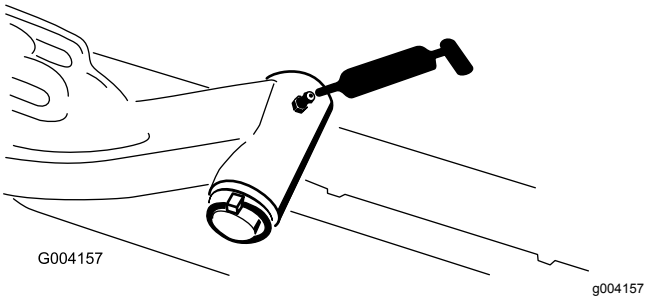

Figure 77

- Rear axle tie rod (2) (Figure 78)

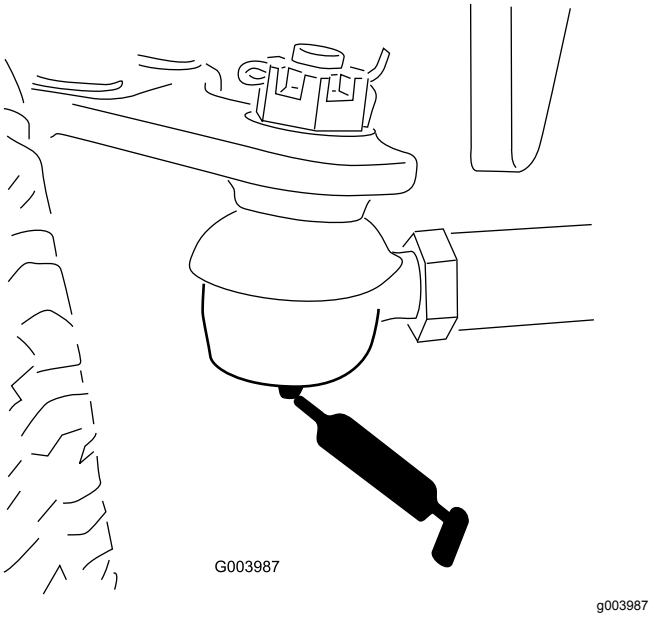

Figure 78

- Axle-steering pivot (1) (Figure 79)

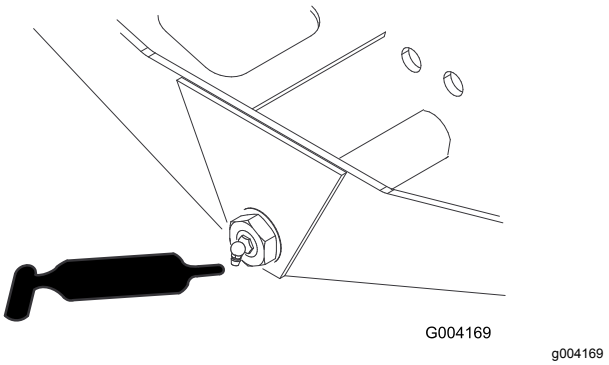

Figure 79

- Steering-cylinder ball joints (2) (Figure 80)

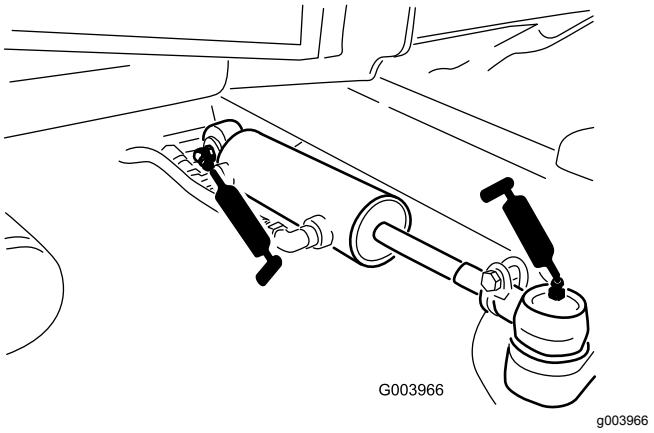

Figure 80

- Brake pedal (1) (Figure 81)

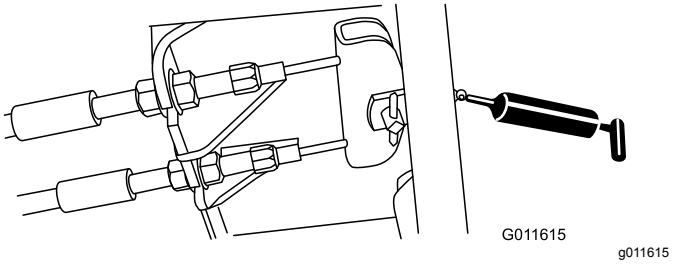

Figure 81

Engine Maintenance

Engine Safety

- Shut off the engine before checking the oil or adding oil to the crankcase.
- Do not change the governor speed or overspeed the engine.

Servicing the Air Cleaner

Service Interval: Every 400 hours—Service the air cleaner. Service the air cleaner earlier if the service indicator shows red. Service it more frequently in extremely dirty or dusty conditions.

Check the air-cleaner body for damage which could cause an air leak. Replace if damaged. Check the whole intake system for leaks, damage, or loose hose clamps.

Service the air-cleaner filter only when the service indicator requires it (Figure 83). Changing the air filter before it is necessary only increases the chance of dirt entering the engine when you remove the filter.

Important: **Make sure that the cover is seated correctly and seals with the air-cleaner body.**

1. Park the machine on a level surface, lower the cutting units, engage the parking brake, shut off the engine, and remove the key.
2. Pull the latch outward and rotate the air-cleaner cover counterclockwise (Figure 82).

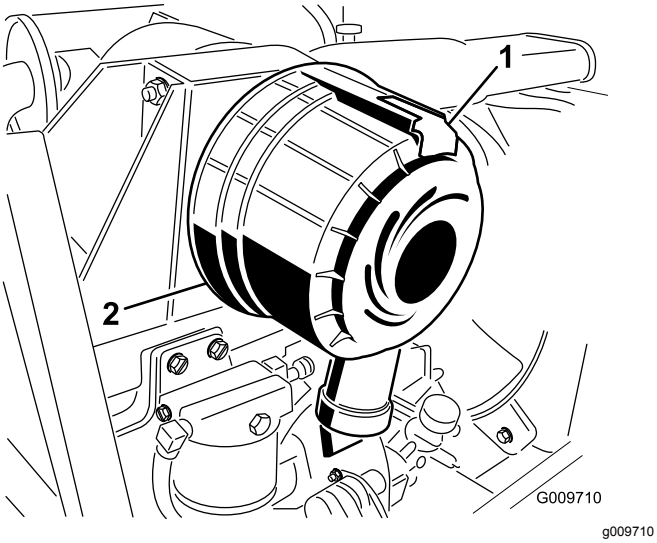

Figure 82

1. Service indicator
2. Latch
3. Cover

3. Release the latches securing the air-cleaner cover to the air-cleaner body (Figure 83).

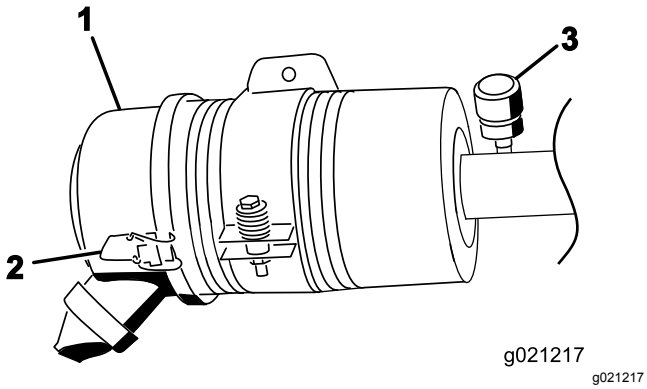

Figure 83

1. Air-cleaner cover
2. Air-cleaner-cover latch
3. Air-cleaner service indicator

4. Remove the cover from the air-cleaner body.
5. Before removing the filter, use low-pressure air—275 kPa (40 psi), clean and dry—to help remove large accumulations of debris packed between outside of the filter and the canister.

   Important: **Avoid using high-pressure air, which could force dirt through the filter into the intake tract.**

   Note: This cleaning process prevents debris from migrating into the intake when you remove the filter.
6. Remove and replace the filter (Figure 84).

   Note: Do not clean the used element due to the possibility of damaging the filter media.

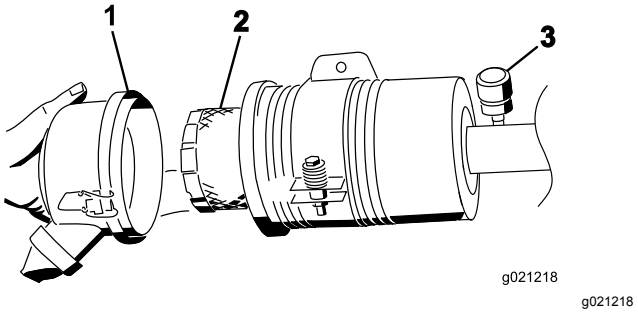

Figure 84

1. Air-cleaner cover
2. Air-cleaner filter
3. Air-cleaner indicator

7. Inspect the new filter for shipping damage, checking the sealing end of the filter and the body.

   Important: **Do not use a damaged element.**
8. Insert the new filter by applying pressure to the outer rim of the element to seat it in the canister.

   Important: **Do not apply pressure to the flexible center of the filter.**
9. Clean the dirt-ejection port located in the removable cover. Remove the rubber outlet valve from the cover, clean the cavity, and replace the outlet valve.
10. Install the cover orienting the rubber outlet valve in a downward position—between approximately 5 o'clock to 7 o'clock when viewed from the end.
11. Secure the latches.

Servicing the Engine Oil

Oil Specification

Use high-quality, low-ash engine oil that meets or exceeds the following specifications:

- API service category CJ-4 or higher
- ACEA service category E6
- JASO service category DH-2

Important: **Using engine oil other than API CJ-4 or higher, ACEA E6, or JASO DH-2 may cause the diesel particulate filter to plug or cause engine damage.**

Use the following engine oil viscosity grade:

- Preferred oil: SAE 15W-40 (above 0°F)
- Alternate oil: SAE 10W-30 or 5W-30 (all temperatures)

Toro Premium Engine Oil is available from your authorized Toro distributor in either 15W-40 or 10W-30 viscosity grades. See the parts catalog for part numbers.

Checking the Engine-Oil Level

Service Interval: Before each use or daily

Important: **Check the engine oil daily. If the engine-oil level is above the Full mark on the dipstick, the engine oil may be diluted with fuel;**

If the engine oil level is above the Full mark, change the engine oil.

The best time to check the engine oil is when the engine is cool before it has been started for the day. If it has already been run, allow the oil to drain back down to the sump for at least 10 minutes before checking. If the oil level is at or below the Add mark on the dipstick, add oil to bring the oil level to the Full mark. **Do not overfill the engine with oil**.

Important: **Keep the engine oil level between the upper and lower limits on the oil gauge; the engine may fail if you run it with too much or too little oil.**

1. Park the machine on a level surface. Unlock the engine-cover latches.
2. Open the engine cover.
3. Remove the dipstick, wipe it clean, install the dipstick into the tube, and pull it out again. The oil level should be between the FULL and ADD marks (Figure 85).

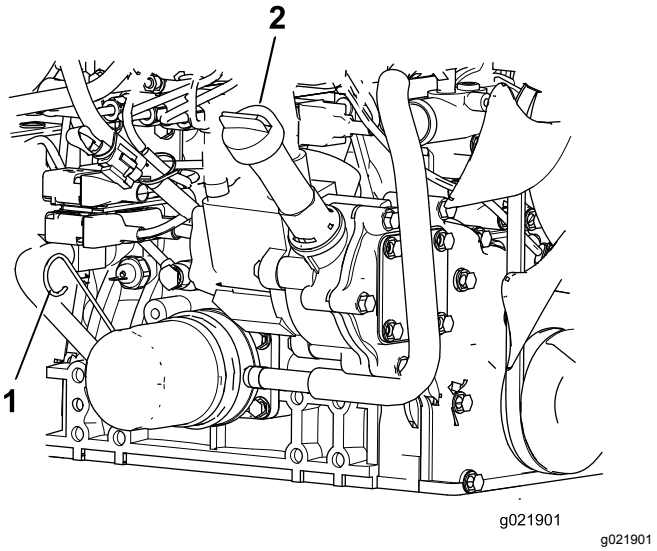

g021901

Figure 85

1. Dipstick
2. Oil-fill cap

4. If the oil level is low, remove the fill cap and add oil until it is between the FULL and ADD marks (Figure 85).

   Note: Do not overfill.
5. Install the oil-fill cap and dipstick.
6. Close the engine cover and secure it with the latches.

Crankcase Oil Capacity

5.2 L (5.5 US qt) with the filter

Changing the Engine Oil and Filter

Service Interval: Every 250 hours—Change the engine oil and filter.

1. Remove the drain plug and let the oil flow into a drain pan (Figure 86).

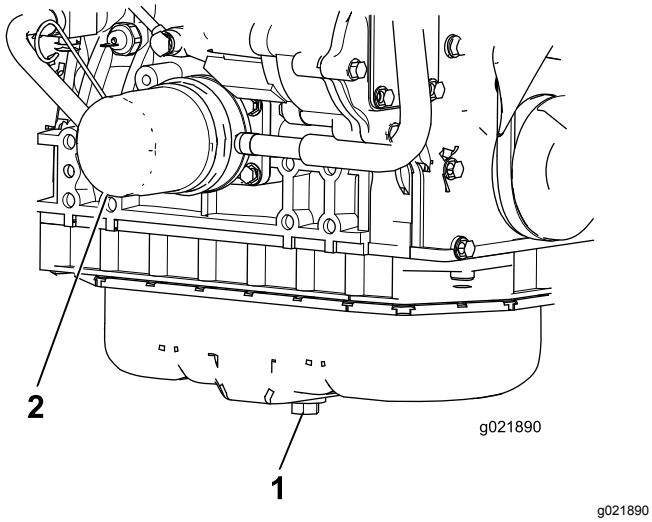

Figure 86

1. Engine-oil drain plug
2. Oil filter

2. When all the oil is drained, install the drain plug.
3. Remove the oil filter (Figure 86).
4. Apply a light coat of clean oil to the new filter seal before screwing it on.

   Important: **Do not overtighten.**

5. Add oil to the crankcase; refer to Servicing the Engine Oil (page 53).

Servicing the Diesel-Oxidation Catalyst (DOC) and the Soot Filter

Service Interval: Every 6,000 hours—Disassemble, clean, and assemble the soot filter of the DPF or clean the soot filter if engine faults SPN 3251 FMI 0, SPN 3720 FMI 0, or SPN 3720 FMI 16 display in the InfoCenter.

If engine faults CHECK ENGINE SPN 3251 FMI 0, CHECK ENGINE SPN 3720 FMI 0, or CHECK ENGINE SPN 3720 FMI 16 display in the InfoCenter (Figure 87), clean the soot filter using the steps that follow:

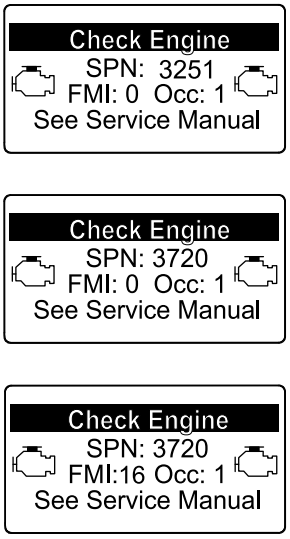

Figure 87

1. Refer to the Engine section in the *Service Manual* for information on disassembling and assembling the diesel-oxidation catalyst and the soot filter of the DPF.
2. Refer to your authorized Toro distributor for diesel-oxidation catalyst and the soot filter replacement parts or service.
3. Contact your authorized Toro distributor to reset the engine ECU after you install a clean DPF.

Fuel System Maintenance

⚠ DANGER

Under certain conditions, fuel and fuel vapors are highly flammable and explosive. A fire or explosion from fuel can burn you and others and can cause property damage.

- **Fill the fuel tank outdoors, in an open area, when the engine is off and is cold. Wipe up any fuel that spills.**
- **Do not fill the fuel tank completely full. Add fuel to the fuel tank until the level is 25 mm (1 inch) below the top of the tank, not the filler neck. This empty space in the tank allows the fuel to expand.**
- **Never smoke when handling fuel, and stay away from an open flame or where fuel fumes may be ignited by a spark.**
- **Store fuel in a clean, safety-approved container and keep the cap in place.**

Servicing the Water Separator

Service Interval: Before each use or daily—Drain water or other contaminants from water separator.

Every 400 hours—Replace the fuel-filter canister.

1. Place a clean container under the fuel filter.
2. Loosen the drain plug on the bottom of the filter canister and open the vent on the top of the canister mount.

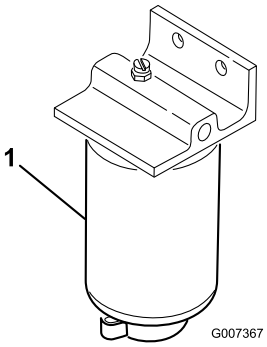

g007367

Figure 88

1. Water separator filter canister

3. Clean the area where the filter canister mounts.
4. Remove the filter canister and clean the mounting surface.
5. Lubricate the gasket on the filter canister with clean oil.
6. Install the filter canister by hand until the gasket contacts mounting surface, then rotate it an additional 1/2 turn.
7. Tighten the drain plug on the bottom of the filter canister and close the vent on the top of the canister mount.

Servicing the Engine Fuel Filter

Service Interval: Every 400 hours—Replace the engine fuel filter.

1. Clean the area around the fuel-filter head (Figure 89).

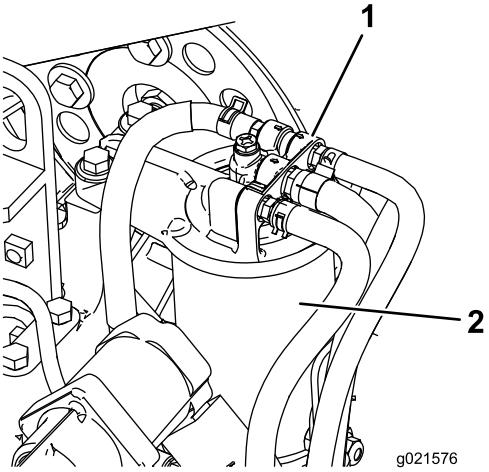

g021576

Figure 89

1. Fuel-filter head
2. Fuel filter

2. Remove the filter and clean the filter-head mounting surface (Figure 89).
3. Lubricate the filter gasket with clean lubricating engine oil. Refer to the engine operator's manual, included with the machine, for additional information.
4. Install the dry filter canister, by hand, until the gasket contacts the filter head, then rotate it an additional 1/2 turn.
5. Start the engine and check for fuel leaks around the filter head.

Checking the Fuel Lines and Connections

Service Interval: Every 400 hours (Or yearly, whichever comes first).

Check the fuel lines and connections for deterioration, damage, or loose connections.

Fuel Pick-up Tube Screen

The fuel pick-up tube, located inside the fuel tank, is equipped with a screen to help prevent debris from entering the fuel system. Remove the fuel pick-up tube and clean screen as required.

Electrical System Maintenance

WARNING

CALIFORNIA
Proposition 65 Warning

Battery posts, terminals, and related accessories contain lead and lead compounds, chemicals known to the State of California to cause cancer and reproductive harm. Wash hands after handling.

Important: **Before welding on the machine, disconnect both cables from the battery, both wire harness plugs from the electronic control module, and the terminal connector from the alternator to prevent damage to the electrical system.**

Electrical System Safety

- Disconnect the battery before repairing the machine. Disconnect the negative terminal first and the positive last. Connect the positive terminal first and the negative last.
- Charge the battery in an open, well-ventilated area, away from sparks and flames. Unplug the charger before connecting or disconnecting the battery. Wear protective clothing and use insulated tools.

Servicing the Battery

Service Interval: Every 50 hours—Clean the battery and check the condition of it (or weekly, whichever comes first).

Every 50 hours—Check the battery-cable connections.

⚠ DANGER

Battery electrolyte contains sulfuric acid, which is fatal if consumed and causes severe burns.

- **Do not drink electrolyte and avoid contact with skin, eyes, or clothing. Wear safety glasses to shield your eyes and rubber gloves to protect your hands.**
- **Fill the battery where clean water is always available for flushing the skin.**

⚠ WARNING

Charging the battery produces gasses that can explode.

Never smoke near the battery and keep sparks and flames away from it.

Keep the terminals and the entire battery case clean because a dirty battery discharges slowly. To clean the battery, wash the entire case with a solution of baking soda and water. Rinse it with clear water.

Checking the Fuses

There are 8 fuses in the electrical system. The fuse block is located behind the control-arm-access panel (Figure 90).

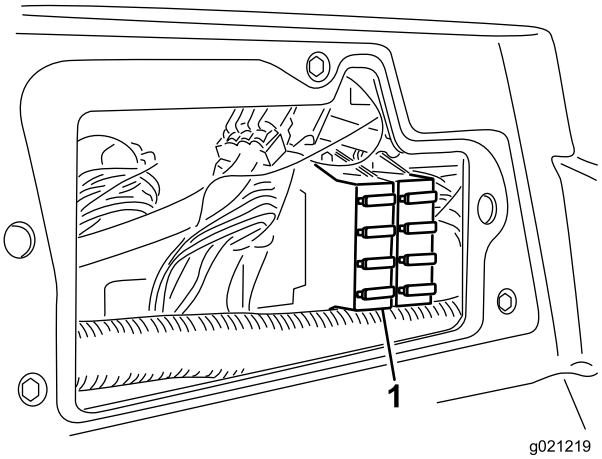

Figure 90

1. Fuse block

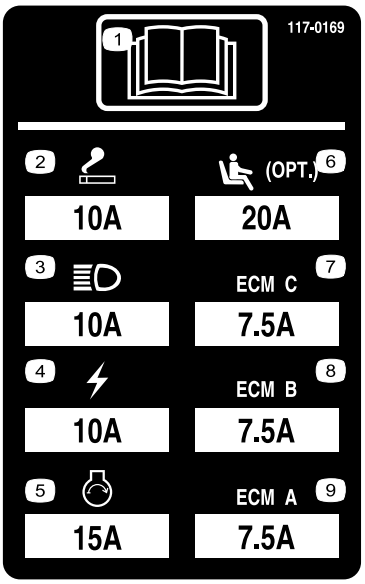

Figure 91

Drive System Maintenance

Adjusting the Traction Drive for Neutral

The machine must not creep when you release the traction pedal. If it does creep, adjust it as follows:

1. Park the machine on a level surface, lower the cutting units to the ground, shut off the engine, and remove the key.
2. Jack up the front of the machine until the front tires are off the ground. Support the machine with jack stands to prevent it from falling accidentally.

   Note: On 4-wheel-drive models, the rear tires must also be off the ground.
3. On the right side of the hydrostat, loosen the locknut on the traction-adjustment cam (Figure 92).

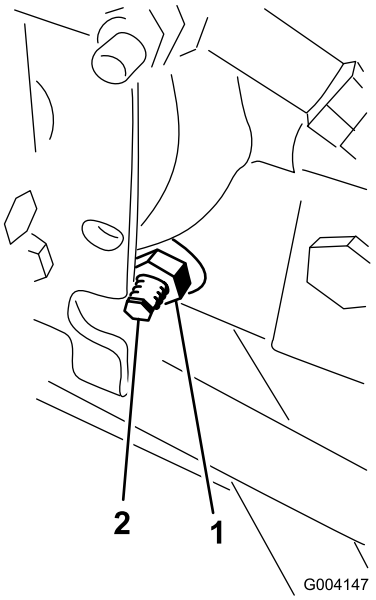

g004147

Figure 92

1. Locknut
2. Traction-adjustment cam

⚠ WARNING

The engine must be running while you perform the final adjustment on the traction adjustment cam. This could cause personal injury.

Keep your hands, feet, face, and other body parts away from the muffler, other hot parts of the engine, and any rotating parts.

4. Start the engine and rotate the cam hex in either direction until the wheels stop rotating.
5. Tighten the locknut to secure the adjustment.
6. Shut off the engine, remove the jack stands, and lower the machine to the ground.
7. Test drive the machine to make that sure that it does not creep.

Adjusting the Rear Wheel Toe-in

Service Interval: Every 800 hours—Check the rear wheel toe-in.

1. Rotate the steering wheel to position the rear wheels straight ahead.
2. Loosen the jam nut on each end of the tie rod (Figure 93).

   Note: The end of the tie rod with the external groove is a left-hand thread.

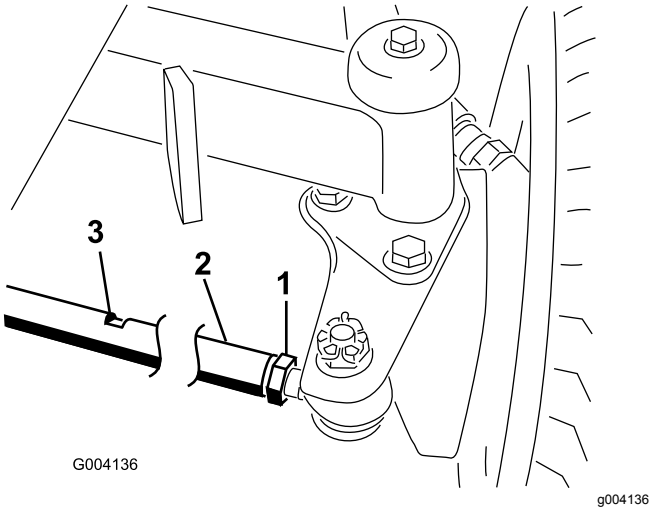

Figure 93

1. Jam nut
2. Tie rod
3. Wrench slot

3. Using the wrench slot, rotate the tie rod
4. Measure the distance at the front and rear of the rear wheels at axle height.

   Note: The distance at the front of the rear wheels should be less than 6 mm (1/4 inch) of the distance measured at the rear of the wheels.
5. Repeat this procedure as required.

Cooling System Maintenance

Cooling System Safety

- **Swallowing engine coolant can cause injury or death; keep out of reach from children and pets.**
- Discharge of hot, pressurized coolant or touching a hot radiator and surrounding parts can cause severe burns.
  - Always allow the engine to cool at least 15 minutes before removing the radiator cap.
  - Use a rag when opening the radiator cap, and open the cap slowly to allow steam to escape.

Removing Debris from the Cooling System

Service Interval: Before each use or daily (More frequently in dirty operating conditions).

Every 100 hours—Inspect the cooling-system hoses.

Every 2 years—Flush and replace the cooling-system fluid.

1. Shut off the engine and remove the key from the ignition switch.
2. Thoroughly clean all debris out of the engine area.
3. Unlatch the clamp and pivot open the rear screen (Figure 94).

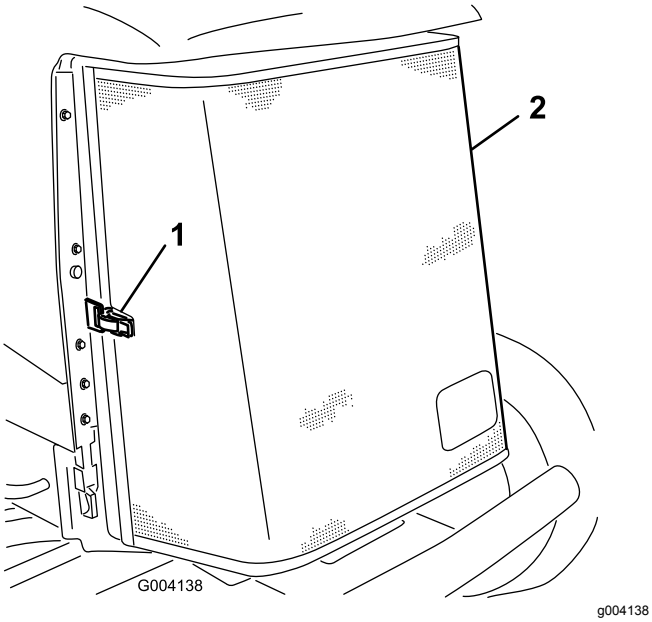

Figure 94

1. Rear-screen latch
2. Rear screen

4. Thoroughly clean both sides of the radiator/oil cooler with compressed air (Figure 95).

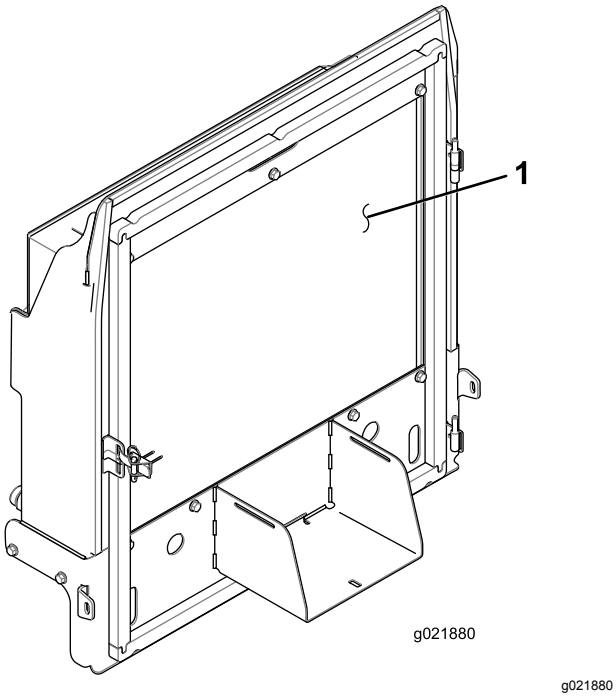

Figure 95

1. Radiator/oil cooler

5. Close the screen and secure the latch.

Brake Maintenance

Adjusting the Parking Brakes

Adjust the brakes when there is more than 2.5 cm (1 inch) of free travel of the brake pedal, or when more holding force is required (Figure 96). Free travel is the distance that the brake pedal moves before you feel braking resistance.

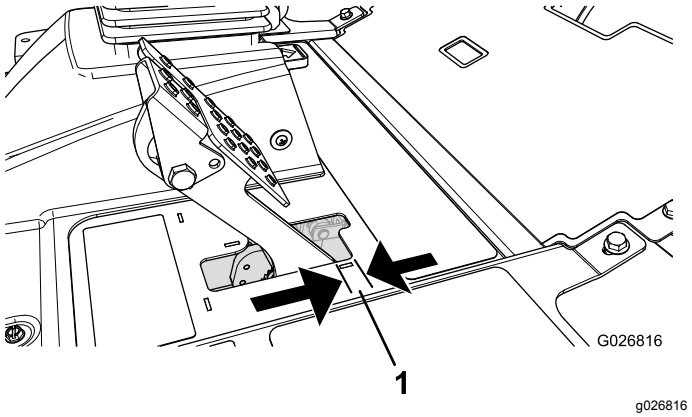

Figure 96

1. Free travel

Note: Use the wheel-motor backlash to rock the drums back and forth to ensure that the drums are free prior to and after adjustment.

1. To reduce free travel of the brake pedals, tighten the brakes by loosening the front nut on the threaded end of the brake cable (Figure 97).

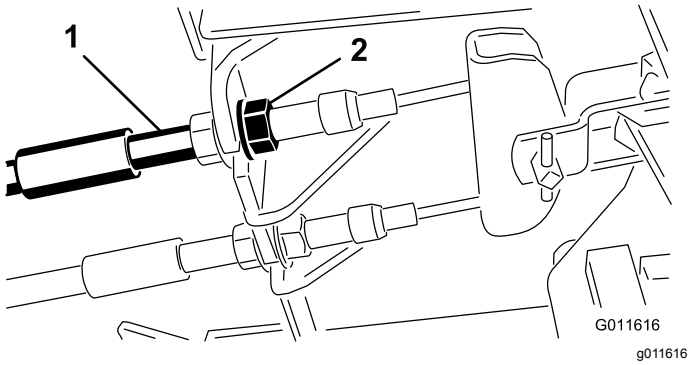

Figure 97

1. Brake cables
2. Front nuts

2. Tighten the rear nut to move the cable backward until brake pedals have 0.63 to 1.27 cm (1/4 to 1/2 inch) of free travel, before the wheel locks up (Figure 96).
3. Tighten the front nuts, ensuring that both cables actuate the brakes simultaneously.

Note: Ensure that the cable conduit does not rotate while you are tightening the nuts.

Adjusting the Parking-Brake Latch

If the parking brake fails to engage and latch, adjust the brake pawl.

1. Loosen the 2 screws securing the parking-brake pawl to the frame (Figure 98).

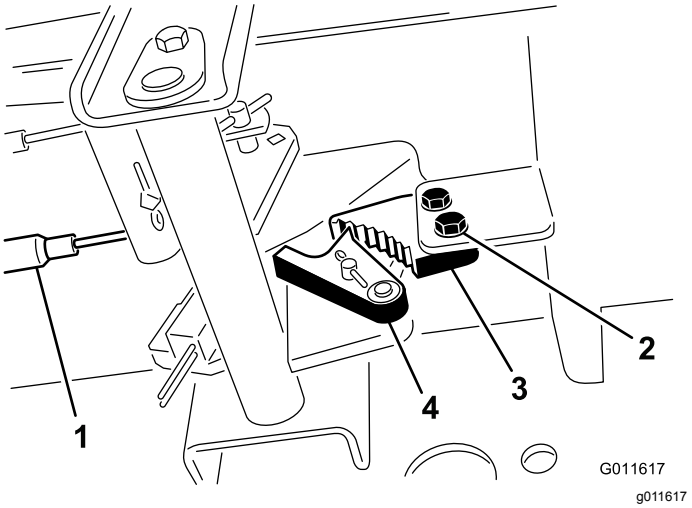

Figure 98

1. Brake cables
2. Screw
3. Parking-brake pawl
4. Brake detent

2. Press the parking-brake pedal forward until the brake detent completely engages on the brake pawl (Figure 98).
3. Tighten the 2 screws to lock the adjustment.
4. Press the brake pedal to release the parking brake.
5. Check the adjustment and adjust as required.

Belt Maintenance

Servicing the Alternator Belt

Service Interval: After the first 10 hours

Every 100 hours

Note: For proper belt tension, allow 10 mm (3/8 inch) deflection when a force of 44 N (10 lb) is applied on the belt midway between the pulleys.

1. If the deflection is not 10 mm (3/8 inch), loosen the alternator mounting bolts (Figure 99).

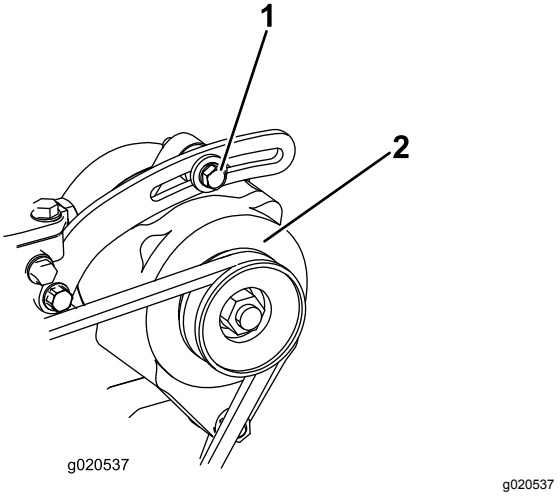

Figure 99

1. Mounting bolt
2. Alternator

2. Increase or decrease the alternator-belt tension and tighten the bolts.
3. Check the deflection of the belt again to ensure that the tension is correct.

Hydraulic System Maintenance

Hydraulic System Safety

- Seek immediate medical attention if fluid is injected into skin. Injected fluid must be surgically removed within a few hours by a doctor.
- Ensure that all hydraulic-fluid hoses and lines are in good condition and all hydraulic connections and fittings are tight before applying pressure to the hydraulic system.
- Keep your body and hands away from pinhole leaks or nozzles that eject high-pressure hydraulic fluid.
- Use cardboard or paper to find hydraulic leaks.
- Safely relieve all pressure in the hydraulic system before performing any work on the hydraulic system.

Changing the Hydraulic Fluid

Service Interval: Every 800 hours

Every 2 years—Drain and flush the hydraulic tank.

If fluid becomes contaminated, contact your authorized Toro distributor because the system must be flushed. Contaminated fluid looks milky or black when compared to clean oil.

1. Park the machine on a level surface, lower the cutting units to the ground, shut off the engine, and remove the key.
2. Raise the hood.
3. Place a large drain pan under the fitting secured to the bottom of the hydraulic-fluid reservoir (Figure 100).

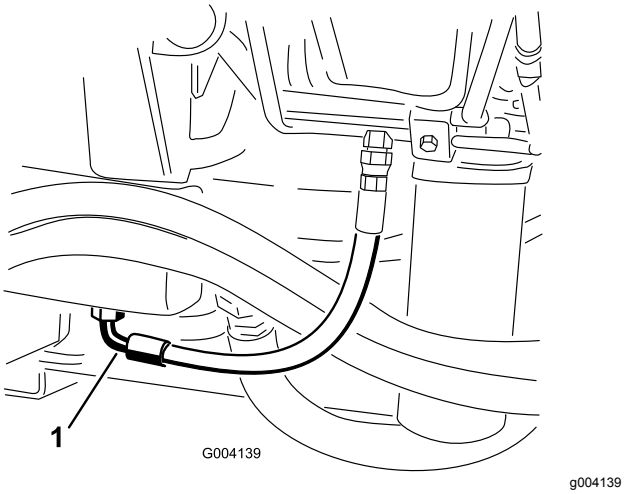

Figure 100

1. Hose

4. Disconnect the hose from the bottom of the fitting and let the hydraulic fluid flow into the drain pan.
5. Install the hose when hydraulic fluid stops draining.
6. Fill the reservoir with approximately 30 L (8 US gallons) of hydraulic fluid; refer to Checking the Hydraulic Fluid (page 26).

   Important: **Use only hydraulic fluids specified. Other fluids could damage the system.**
7. Install the reservoir cap.
8. Start the engine and use all of the hydraulic controls to distribute hydraulic fluid throughout the system. Also, check for leaks.
9. Shut off the engine.
10. Check the level of the hydraulic fluid and add enough to raise level to the FULL mark on the dipstick.

    Important: **Do not overfill the hydraulic system.**

Replacing the Hydraulic Filters

Service Interval: Every 800 hours (Or more often if the service-interval indicator is in the red zone).

The hydraulic system is equipped with a service-interval indicator (Figure 101). With the engine running at operating temperature, view the indicator, it should be in the green zone. When the indicator is in the red zone, change the hydraulic filters.

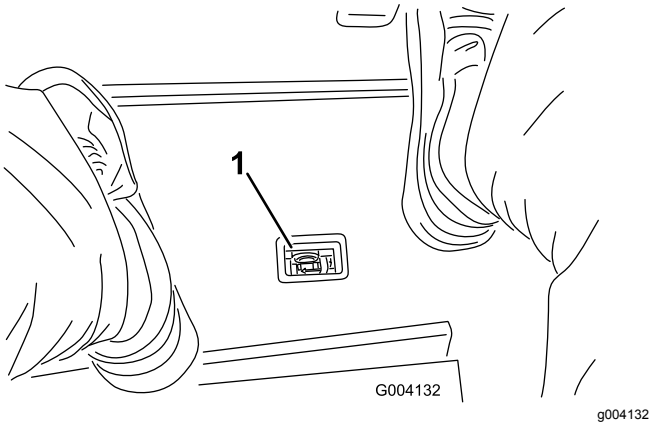

Figure 101

1. Hydraulic-filter-restriction indicator

Important: **Use of any other filters may void the warranty on some components.**

1. Position the machine on a level surface, lower the cutting units, shut off the engine, engage the parking brake, and remove the key from the ignition switch.
2. Clean the area around the filter-mounting area and place a drain pan under the filter (Figure 102) and (Figure 103).

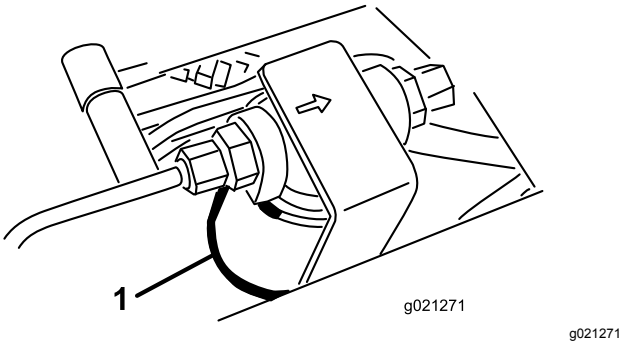

Figure 102

1. Hydraulic filter

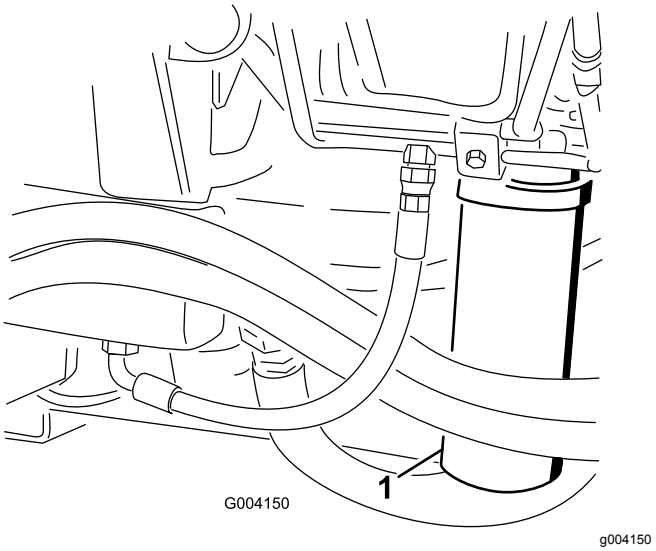

Figure 103

1. Hydraulic filter

3. Remove the filter.
4. Lubricate the gasket on the new filter with hydraulic oil.
5. Ensure that the filter-mounting area is clean.
6. Install the filter by hand until the gasket contacts the mounting surface, then rotate it an additional 1/2 turn.
7. Repeat the procedure on the other filter.
8. Start the engine and let it run for about 2 minutes to purge air from the system.
9. Shut off the engine and check for leaks.

Checking the Hydraulic Lines and Hoses

Service Interval: Before each use or daily

Check the hydraulic lines and hoses for leaks, kinked lines, loose mounting supports, wear, loose fittings, weather deterioration, and chemical deterioration. Make all necessary repairs before operating.

Hydraulic-System Test Ports

Use the hydraulic-system test ports to test the pressure in the hydraulic circuits. Contact your authorized Toro distributor for assistance.

Use the test ports on the front hydraulic tubes to assist in troubleshooting the traction circuit (Figure 104).

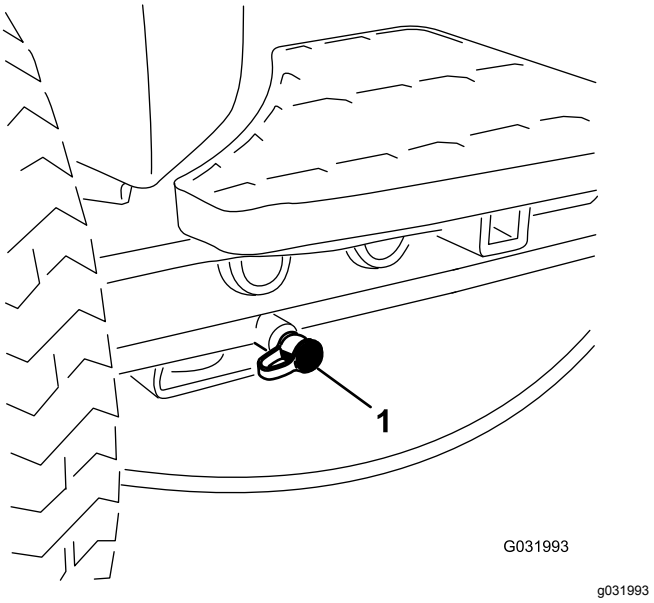

Figure 104

1. Traction-circuit test port

Use the test ports on the mow manifold block to assist in troubleshooting the mow circuit (Figure 105).

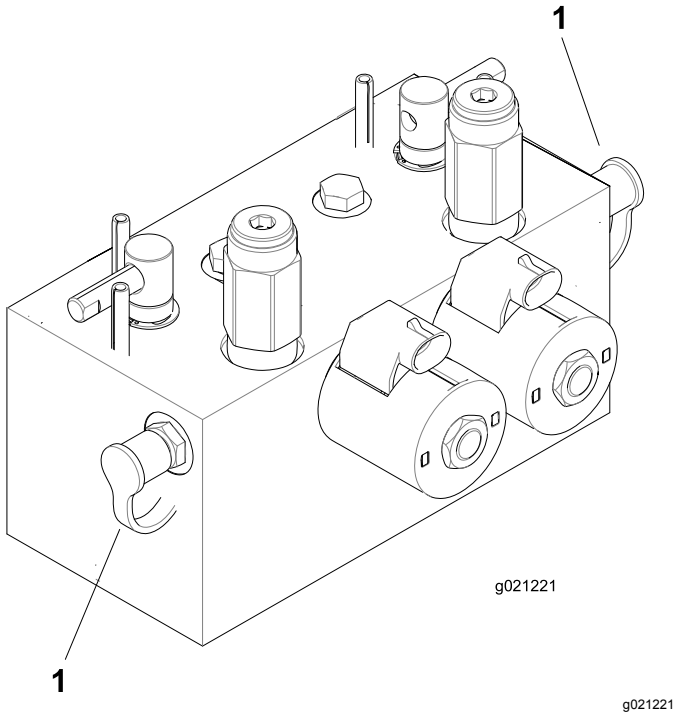

Figure 105

1. Mow-circuit test ports

Use the test port on the lift manifold block to assist in troubleshooting the lift circuit (Figure 106).

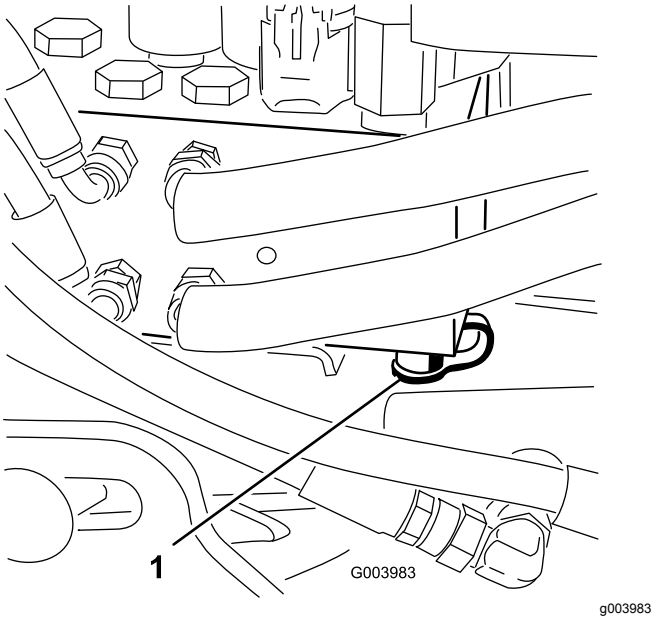

Figure 106

1. Lift-circuit test port

Cutting Unit System Maintenance

Cutting Unit Safety

A worn or damaged cutting unit can break, and a piece of a reel or bedknife could be thrown at you or bystanders, resulting in serious personal injury or death.

- Inspect the cutting units periodically for wear or damage.
- Use care when checking the cutting units. Wrap the blades or wear gloves, and use caution when servicing the reels and bedknives. Only replace or sharpen the reels and bedknives; never straighten or weld them.
- On multi-bladed machines, take care as rotating 1 reel can cause other blades to rotate.

Backlapping the Cutting Units

⚠ WARNING

Contact with the reels or other moving parts can result in personal injury.

- **Keep fingers, hands, and clothing away from the reels or other moving parts.**
- **Never attempt to turn the reels by hand or foot while the engine is running.**

Note: When backlapping, the front units all operate together, and the rear units operate together.

1. Position the machine on a level surface, lower the cutting units, shut off the engine, engage the parking brake, and move the Enable/Disable switch to the DISABLE position.
2. Unlock and raise the seat to expose the backlap levers (Figure 107).
3. Make initial reel-to-bedknife adjustments appropriate for backlapping on all cutting units that are to be backlapped; refer to the *Operator's Manual* for the cutting units.
4. Start the engine and run at low idle speed.

   ⚠ DANGER

   Changing the engine speed while backlapping may cause the reels to stall.

   - **Never change the engine speed while backlapping.**
   - **Backlap only at low engine-idle speed.**

5. Select either front, rear, or both backlap levers to determine which units to backlap (Figure 107).

   ⚠ DANGER

   To avoid personal injury, be certain that you are clear of the cutting units before proceeding.

6. With the Mow/Transport lever in the MOW position, move the Enable/Disable switch to the ENABLE position. Move the Lower Mow/Lift control forward to start the backlapping operation on the designated reels.
7. Apply lapping compound with a long-handled brush.

   Important: **Never use a short-handled brush.**

8. If the reels stall or become erratic while backlapping, select a higher reel-speed setting

until the speed stabilizes, then return the reel speed to your desired speed.

9. To adjust the cutting units while backlapping, turn the reels off by moving the Lower Mow/Raise lever rearward; the Enable/Disable switch to the DISABLE position, and shut off the engine.

   After completing adjustments, repeat steps 4 through 8.

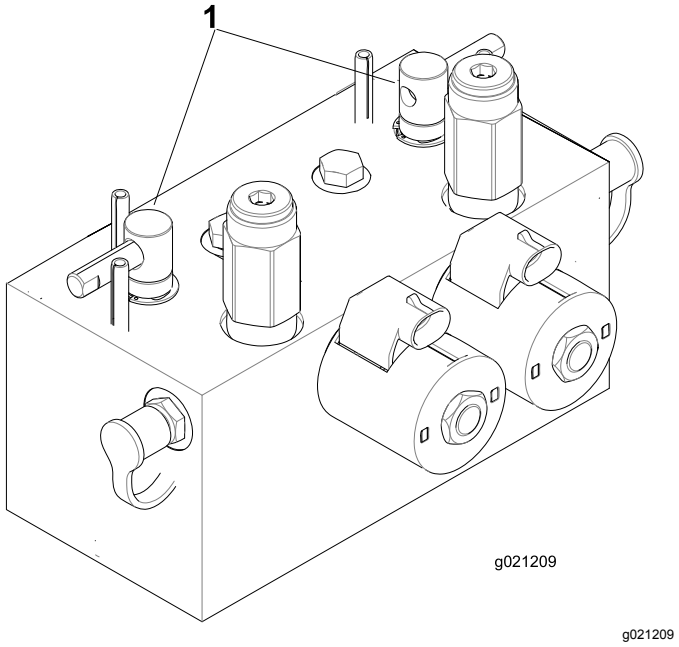

Figure 107

1. Backlap levers

10. Repeat the procedure for all cutting units you want to backlap.

11. When finished, return the backlap levers to the MOW position, lower the seat, and wash all lapping compound off the cutting units.

    Note: Adjust the cutting-unit reel to bedknife as needed. Adjust the cutting-unit reel speed to the desired mowing setting.

    Important: **If the backlap switch is not returned to the OFF position after backlapping, the cutting units do not raise or function properly.**

    Note: For a better cutting edge, run a file across the front face of the bedknife after lapping. This removes any burrs or rough edges that may have built up on the cutting edge.

Storage

Preparing the Traction Unit

1. Thoroughly clean the traction unit, cutting units, and engine.
2. Check the tire pressure. Inflate all traction unit tires to 83 to 103 kPa (12 to 15 psi).
3. Check all fasteners for looseness and tighten them as necessary.
4. Grease all grease fittings and pivot points. Wipe up any excess lubricant.
5. Lightly sand and use touch-up paint on painted areas that are scratched, chipped, or rusted. Repair any dents in the metal body.
6. Service the battery and cables as follows:
   A. Remove the battery terminals from the battery posts.
   B. Clean the battery, terminals, and posts with a wire brush and baking soda solution.
   C. Coat the cable terminals and battery posts with Grafo 112X skin-over grease (Toro Part Number 505-47) or petroleum jelly to prevent corrosion.
   D. Slowly recharge the battery every 60 days for 24 hours to prevent lead sulfation of the battery.

Preparing the Engine

1. Drain the engine oil from the oil pan and replace the drain plug.
2. Remove and discard the oil filter. Install a new oil filter.
3. Refill the oil pan with designated quantity of motor oil.
4. Start the engine and run it at idle speed for approximately 2 minutes.
5. Shut off the engine.
6. Flush the fuel tank with fresh, clean diesel fuel.
7. Check antifreeze protection and add a 50/50 solution of water and antifreeze as needed for expected minimum temperature in your area.
8. Secure all fuel-system fittings.
9. Thoroughly clean and service the air-cleaner assembly.
10. Seal the air-cleaner inlet and the exhaust outlet with weatherproof tape.
11. Check the antifreeze protection and add as needed for expected minimum temperature in your area.

Notes:

Notes:

Notes:

European Privacy Notice

The Information Toro Collects
Toro Warranty Company (Toro) respects your privacy. In order to process your warranty claim and contact you in the event of a product recall, we ask you to share certain personal information with us, either directly or through your local Toro company or dealer.

The Toro warranty system is hosted on servers located within the United States where privacy law may not provide the same protection as applies in your country.

BY SHARING YOUR PERSONAL INFORMATION WITH US, YOU ARE CONSENTING TO THE PROCESSING OF YOUR PERSONAL INFORMATION AS DESCRIBED IN THIS PRIVACY NOTICE.

The Way Toro Uses Information
Toro may use your personal information to process warranty claims, to contact you in the event of a product recall and for any other purpose which we tell you about. Toro may share your information with Toro's affiliates, dealers or other business partners in connection with any of these activities. We will not sell your personal information to any other company. We reserve the right to disclose personal information in order to comply with applicable laws and with requests by the appropriate authorities, to operate our systems properly or for our own protection or that of other users.

Retention of your Personal Information
We will keep your personal information as long as we need it for the purposes for which it was originally collected or for other legitimate purposes (such as regulatory compliance), or as required by applicable law.

Toro's Commitment to Security of Your Personal Information
We take reasonable precautions in order to protect the security of your personal information. We also take steps to maintain the accuracy and current status of personal information.

Access and Correction of your Personal Information
If you would like to review or correct your personal information, please contact us by email at legal@toro.com.

Australian Consumer Law

Australian customers will find details relating to the Australian Consumer Law either inside the box or at your local Toro Dealer.

California Proposition 65 Warning Information

What is this warning?

You may see a product for sale that has a warning label like the following:

WARNING: Cancer and Reproductive Harm—www.p65Warnings.ca.gov.

What is Prop 65?

Prop 65 applies to any company operating in California, selling products in California, or manufacturing products that may be sold in or brought into California. It mandates that the Governor of California maintain and publish a list of chemicals known to cause cancer, birth defects, and/or other reproductive harm. The list, which is updated annually, includes hundreds of chemicals found in many everyday items. The purpose of Prop 65 is to inform the public about exposure to these chemicals.

Prop 65 does not ban the sale of products containing these chemicals but instead requires warnings on any product, product packaging, or literature with the product. Moreover, a Prop 65 warning does not mean that a product is in violation of any product safety standards or requirements. In fact, the California government has clarified that a Prop 65 warning "is not the same as a regulatory decision that a product is 'safe' or 'unsafe.'" Many of these chemicals have been used in everyday products for years without documented harm. For more information, go to https://oag.ca.gov/prop65/faqs-view-all.

A Prop 65 warning means that a company has either (1) evaluated the exposure and has concluded that it exceeds the "no significant risk level"; or (2) has chosen to provide a warning based on its understanding about the presence of a listed chemical without attempting to evaluate the exposure.

Does this law apply everywhere?

Prop 65 warnings are required under California law only. These warnings are seen throughout California in a wide range of settings, including but not limited to restaurants, grocery stores, hotels, schools, and hospitals, and on a wide variety of products. Additionally, some online and mail order retailers provide Prop 65 warnings on their websites or in catalogs.

How do the California warnings compare to federal limits?

Prop 65 standards are often more stringent than federal and international standards. There are various substances that require a Prop 65 warning at levels that are far lower than federal action limits. For example, the Prop 65 standard for warnings for lead is 0.5 µg/day, which is well below the federal and international standards.

Why don't all similar products carry the warning?

- Products sold in California require Prop 65 labelling while similar products sold elsewhere do not.
- A company involved in a Prop 65 lawsuit reaching a settlement may be required to use Prop 65 warnings for its products, but other companies making similar products may have no such requirement.
- The enforcement of Prop 65 is inconsistent.
- Companies may elect not to provide warnings because they conclude that they are not required to do so under Prop 65; a lack of warnings for a product does not mean that the product is free of listed chemicals at similar levels.

Why does Toro include this warning?

Toro has chosen to provide consumers with as much information as possible so that they can make informed decisions about the products they buy and use. Toro provides warnings in certain cases based on its knowledge of the presence of one or more listed chemicals without evaluating the level of exposure, as not all the listed chemicals provide exposure limit requirements. While the exposure from Toro products may be negligible or well within the "no significant risk" range, out of an abundance of caution, Toro has elected to provide the Prop 65 warnings. Moreover, if Toro does not provide these warnings, it could be sued by the State of California or by private parties seeking to enforce Prop 65 and subject to substantial penalties.

The Toro Warranty

A Two-Year Limited Warranty

Conditions and Products Covered

The Toro Company and its affiliate, Toro Warranty Company, pursuant to an agreement between them, jointly warrant your Toro Commercial product ("Product") to be free from defects in materials or workmanship for two years or 1500 operational hours*, whichever occurs first. This warranty is applicable to all products with the exception of Aerators (refer to separate warranty statements for these products). Where a warrantable condition exists, we will repair the Product at no cost to you including diagnostics, labor, parts, and transportation. This warranty begins on the date the Product is delivered to the original retail purchaser.
* Product equipped with an hour meter.

Instructions for Obtaining Warranty Service

You are responsible for notifying the Commercial Products Distributor or Authorized Commercial Products Dealer from whom you purchased the Product as soon as you believe a warrantable condition exists. If you need help locating a Commercial Products Distributor or Authorized Dealer, or if you have questions regarding your warranty rights or responsibilities, you may contact us at:

Toro Commercial Products Service Department
Toro Warranty Company
8111 Lyndale Avenue South
Bloomington, MN 55420-1196

952–888–8801 or 800–952–2740
E-mail: commercial.warranty@toro.com

Owner Responsibilities

As the Product owner, you are responsible for required maintenance and adjustments stated in your *Operator's Manual*. Failure to perform required maintenance and adjustments can be grounds for disallowing a warranty claim.

Items and Conditions Not Covered

Not all product failures or malfunctions that occur during the warranty period are defects in materials or workmanship. This warranty does not cover the following:

- Product failures which result from the use of non-Toro replacement parts, or from installation and use of add-on, or modified non-Toro branded accessories and products. A separate warranty may be provided by the manufacturer of these items.
- Product failures which result from failure to perform recommended maintenance and/or adjustments. Failure to properly maintain your Toro product per the Recommended Maintenance listed in the *Operator's Manual* can result in claims for warranty being denied.
- Product failures which result from operating the Product in an abusive, negligent, or reckless manner.
- Parts subject to consumption through use unless found to be defective. Examples of parts which are consumed, or used up, during normal Product operation include, but are not limited to, brake pads and linings, clutch linings, blades, reels, rollers and bearings (sealed or greasable), bed knives, spark plugs, castor wheels and bearings, tires, filters, belts, and certain sprayer components such as diaphragms, nozzles, and check valves, etc.
- Failures caused by outside influence. Conditions considered to be outside influence include, but are not limited to, weather, storage practices, contamination, use of unapproved fuels, coolants, lubricants, additives, fertilizers, water, or chemicals, etc.
- Failure or performance issues due to the use of fuels (e.g. gasoline, diesel, or biodiesel) that do not conform to their respective industry standards.
- Normal noise, vibration, wear and tear, and deterioration.
- Normal "wear and tear" includes, but is not limited to, damage to seats due to wear or abrasion, worn painted surfaces, scratched decals or windows, etc.

Parts

Parts scheduled for replacement as required maintenance are warranted for the period of time up to the scheduled replacement time for that part. Parts replaced under this warranty are covered for the duration of the original product warranty and become the property of Toro. Toro will make the final decision whether to repair any existing part or assembly or replace it. Toro may use remanufactured parts for warranty repairs.

Deep Cycle and Lithium-Ion Battery Warranty:

Deep cycle and Lithium-Ion batteries have a specified total number of kilowatt-hours they can deliver during their lifetime. Operating, recharging, and maintenance techniques can extend or reduce total battery life. As the batteries in this product are consumed, the amount of useful work between charging intervals will slowly decrease until the battery is completely worn out. Replacement of worn out batteries, due to normal consumption, is the responsibility of the product owner. Battery replacement may be required during the normal product warranty period at owner's expense. Note: (Lithium-Ion battery only): A Lithium-Ion battery has a part only prorated warranty beginning year 3 through year 5 based on the time in service and kilowatt hours used. Refer to the *Operator's Manual* for additional information.

Maintenance is at Owner's Expense

Engine tune-up, lubrication, cleaning and polishing, replacement of filters, coolant, and completing recommended maintenance are some of the normal services Toro products require that are at the owner's expense.

General Conditions

Repair by an Authorized Toro Distributor or Dealer is your sole remedy under this warranty.

Neither The Toro Company nor Toro Warranty Company is liable for indirect, incidental or consequential damages in connection with the use of the Toro Products covered by this warranty, including any cost or expense of providing substitute equipment or service during reasonable periods of malfunction or non-use pending completion of repairs under this warranty. Except for the Emissions warranty referenced below, if applicable, there is no other express warranty. All implied warranties of merchantability and fitness for use are limited to the duration of this express warranty.

Some states do not allow exclusions of incidental or consequential damages, or limitations on how long an implied warranty lasts, so the above exclusions and limitations may not apply to you. This warranty gives you specific legal rights, and you may also have other rights which vary from state to state.

Note regarding engine warranty:

The Emissions Control System on your Product may be covered by a separate warranty meeting requirements established by the U.S. Environmental Protection Agency (EPA) and/or the California Air Resources Board (CARB). The hour limitations set forth above do not apply to the Emissions Control System Warranty. Refer to the Engine Emission Control Warranty Statement supplied with your product or contained in the engine manufacturer's documentation for details

Countries Other than the United States or Canada

Customers who have purchased Toro products exported from the United States or Canada should contact their Toro Distributor (Dealer) to obtain guarantee policies for your country, province, or state. If for any reason you are dissatisfied with your Distributor's service or have difficulty obtaining guarantee information, contact the Toro importer.

374-0253 Rev D