FORM NO. 3321–416

TORO®

MODEL NO. 03210 – 90001 & UP
MODEL NO. 03211 – 90001 & UP

OPERATOR'S MANUAL

5 & 8 BLADE 27" CUTTING UNIT

Reelmaster® 3100D

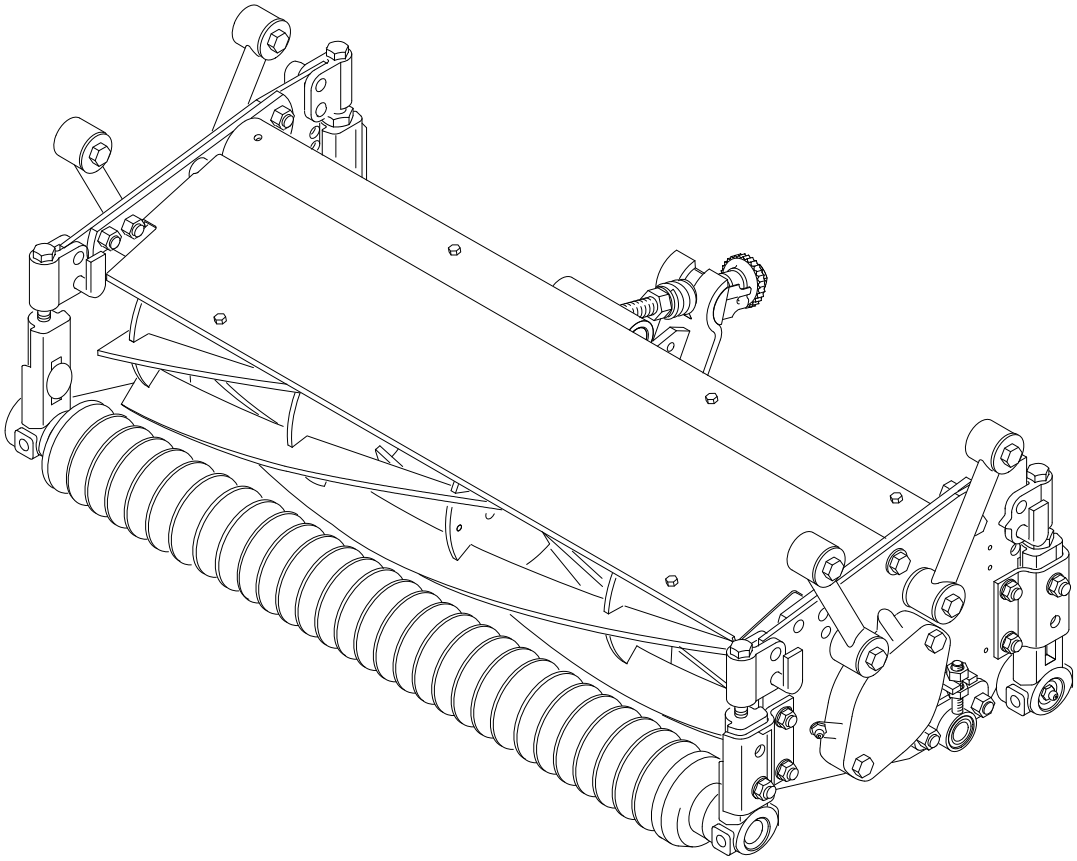

© The TORO COMPANY – 1998

TABLE OF CONTENTS

	Page
SPECIFICATIONS	2
SAFETY INSTRUCTIONS	2
ADJUSTING CUTTING UNIT	3
Mount Front Roller	3
Set Height−of−Cut and Level Rear Roller	3
Adjust Bedknife Parallel To Reel	3
Verify Height−of−Cut Setting	4
OPERATING INSTRUCTIONS	5
Cutting Unit Characteristics	5
Cutting Unit Daily Adjustments	5
LUBRICATION	6
BACKLAPPING CUTTING UNITS	7
TORO PROMISE	8

SPECIFICATIONS

Type of Cutter: All cutting units supported by equal length independent lift arms; interchangeable to all three cutting unit positions.

Construction: 5 or 8 blades, 7" diameter, welded to 5 stamped steel spiders. Reels mounted on greaseable self−aligning ball bearings.

Height−of−Cut: 1/4"−1−3/4".
1/2"−2−5/8" with fixed cutting unit.

Frequency of Clip:
(With variable speed set to maximum rpm)
5 blade @ 1040 reel rpm @ 5 mph
1.00"clip.
5 blade @ 1040 reel rpm @ 6 mph
1.20" clip.
8 blade @ 1040 reel rpm @ 5 mph
.63" clip.
8 blade @ 1040 reel rpm @ 6 mph
.76" clip.

Bedknife to Reel Adjustment: Single knob screw adjustment for bedknife to reel, located at center of bedbar. Each notch on the knob will move the bedknife .0005 inches .

Suspension System: Fully floating with hydraulic counterbalance. L−I−N−K−S™ cutting unit suspension system provides fore and aft oscillation. Main center pivot allows side−to−side oscillation. With optional Fixed Kit, Part No. 93−6915, cutting units can be locked into fixed (fore/aft) position for use with skids or anti−scalp rollers.

Optional Equipment:

Full Roller Kit	Model No. 03440
Sectional Roller Kit	Model No. 03445
Wiehle Roller Kit	Model No. 03450
Anti−Scalp Roller Kit	Model No. 03447
Roller Scraper Kit	Part No. 60−9560
Wiehle Roller Scraper Kit	Part No. 94−5082
Comb Kit	Part No. 67−9400
Fixed Kit	Part No. 93−6915
Skid Kit	Part No. 94−3664
Backlapping Brush Assembly	Part No. 29−9100
Gauge Bar Assembly	Part No. 13−8199
Bedknife Screw Tool	Part No. 51−0880

Specifications and design subject to change without notice.

SAFETY AND INSTRUCTION DECALS

The following safety/instruction decals are affixed to the cutting unit. If any decal becomes illegible or damaged, install a new decal. Part numbers are listed below and in your Parts Catalog. Order replacements from your Authorized Toro Distributor.

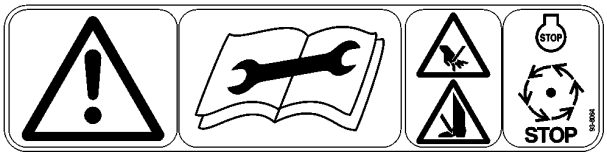

ON SHIELD
(Part No. 93−8064)

Danger! Rotating reel will cut hands and feet. Never place hands or feet in reel area while engine is running. Read Operator Manual for maintenance procedures.

ADJUSTING CUTTING UNITS

IMPORTANT: Read this Operator's Manual thoroughly before operating cutting unit. Failure to do so may result in damage to the cutting unit.

After the cutting unit is unboxed, use the following procedures to assure the cutting units are adjusted properly.

1. Check each end of the reel for grease. Grease should be visibly evident in the reel bearings.

2. Insure that all nuts and bolts are securely fastened.

3. Adjust bedknife to reel.

4. Adjust front roller.

5. Level rear roller.

6. Set set height−of−cut.

MOUNT FRONT ROLLER (Fig. 1)

1. Remove (2) locknuts securing each angle bracket to cutting unit.

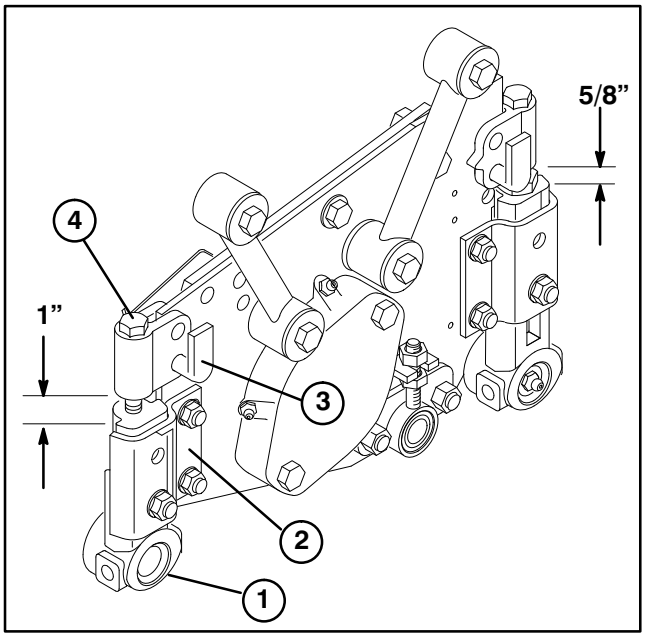

Figure 1

1. Roller bracket
2. Angle bracket
3. Height−of−cut pin
4. Support capscrew

2. Remove height−of−cut pins.

3. Insert smaller dia. shaft end of roller into white bushing in roller bracket, making sure flanged end of nylon bushing faces inside toward roller. **Hex of roller bracket must mate with hex of adjustment nut.**

4. Press roller bracket onto other shaft end of roller. **Hex of roller bracket must mate with hex of adjustment nut.**

5. Hold one roller bracket stationary and use other bracket as a wrench to loosen or tighten bearing clearance to allow roller to rotate freely and to eliminate bearing end play.

6. Roller brackets must be aligned for installation onto cutting unit. If necessary to align after bearing adjustment, remove roller bracket on side with flanged nyliner, align with opposite roller bracket within $\pm$ one hex flat and replace.

7. Reinstall Height−of−Cut pins.

8. Reinstall (2) locknuts securing each angle bracket to cutting unit.

SET HEIGHT OF CUT AND LEVEL REAR ROLLER (Fig. 1)

1. Position cutting unit on a flat level table or board.

2. Slightly loosen (crack) nut securing each roller bracket to angle bracket.

3. Adjust support capscrew to achieve 1" $\pm$ 1/16 dimension between Height−of−Cut support and front roller bracket (2 places).

4. Adjust support capscrew to achieve 5/8" $\pm$1/16 dimension between Height−of−Cut support and rear roller bracket (2 places).

5. Remove hairpin cotters securing rear Height−of−Cut pins and reinstall in the 1/2" setting as indicated on Height−of−Cut plate.

6. Remove hairpin cotters securing front Height−of−Cut pins and reinstall in the 1/4" setting as indicated on Height−of−Cut plate to allow clearance between roller and table.

7. Position a 1/2" or thicker bar under the reel blades and against the front face of the bedknife. Make sure bar covers the full length of reel blades.

8. Verify if rear roller is level, by trying to insert a piece of paper under each end of roller. The paper should not fit under the paper.

9. Level roller by adjusting appropriate support capscrew on rear roller supports until roller is parallel and entire length of roller contacts table.

10. When roller is level, adjust both rollers to desired Height−of−Cut pins. **Tighten nuts securing roller brackets.**

ADJUST BEDKNIFE PARALLEL TO REEL (Fig. 2−3)

1. A 19 mm (3/4 inch) wrench will be needed to rotate bedknife adjustment knob. Each notch on the knob will move the bedknife .0005 inches (Fig. 2). Make sure reel contact is removed by rotating bedknife adjustment knob counterclockwise

2. On either end of reel, insert a long strip of dry newspaper between reel and bedknife. While slowly rotating reel into bedknife, turn bedknife adjusting knob clockwise, one notch at a time until paper is pinched lightly, which results in a slight drag when paper is pulled.

ADJUSTING CUTTING UNITS

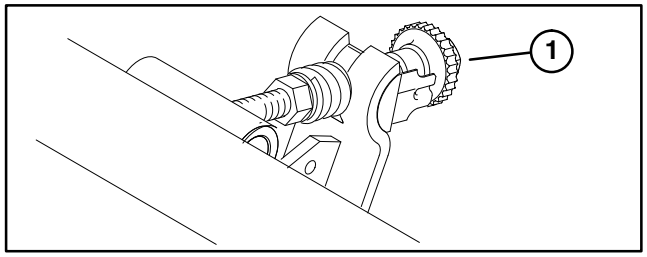

Figure 2
1. Bedknife adjusting knob

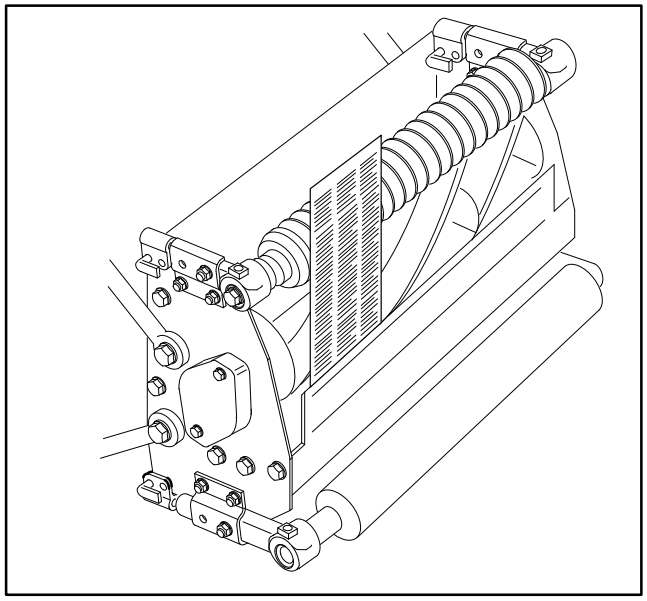

Figure 3

3. Check for light contact at other end of reel using paper. If light contact is not evident, proceed to next step.

4. Remove counter weights from ends of cutting units.

5. Loosen (2) carriage bolts on bedbar adjuster (Fig. 4).

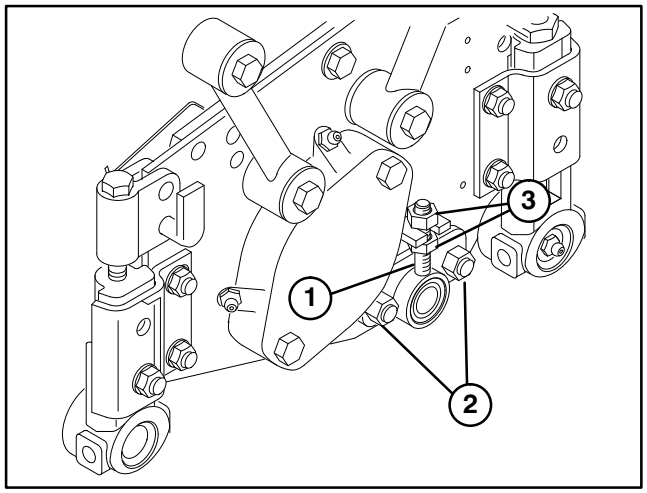

Figure 4
1. Bedbar adjuster
2. Carriage bolts
3. Adjustment nuts

6. Adjust nuts to move bedbar adjuster up or down until paper is pinched along entire bedknife surface, when bedknife adjustment knob is adjusted to no more than two clicks beyond first contact of reel bedknife (Fig. 4).

7. Tighten nuts and carriage bolts and verify adjustment.

8. Re−install counter weights (2 on left and 1 on right) to appropriate ends of cutting units.

VERIFY HEIGHT−OF−CUT SETTING AND LEVEL FRONT ROLLER (Fig. 5)

1. On gauge bar, set head of screw to desired Height−of−Cut. This measurement is from bar face to underside of screw head. Gauge bar (Toro Part No. 13−8199) may be obtained from your local Toro Distributor.

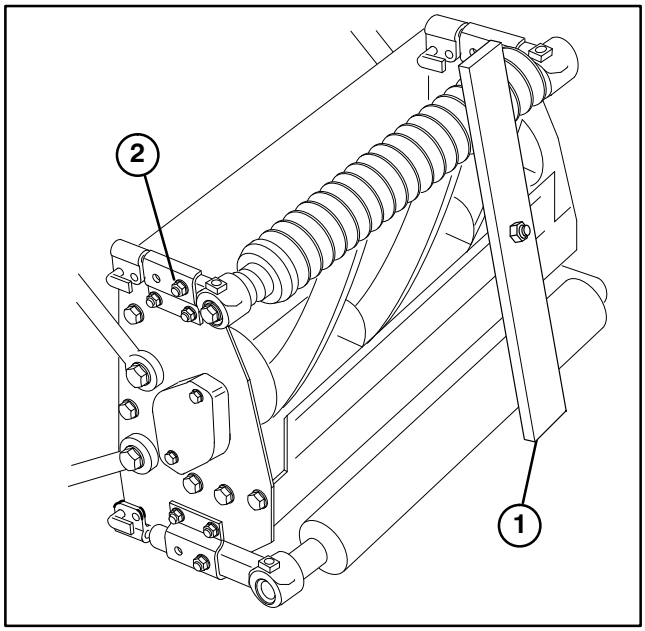

Figure 5
1. Gauge bar
2. Front roller bracket nut

2. Slightly loosen (crack) nut securing each front roller bracket to angle bracket.

3. Place the bar across the front and rear rollers and adjust the front roller support screws until the underside of screw head engages the bedknife cutting edge. Do this on both ends of reel.

4. Tighten nuts securing roller brackets.

5. Place cutting unit on a flat surface and verify that front and rear roller contact surface. Readjust as required.

OPERATING INSTRUCTIONS

CUTTING UNIT CHARACTERISTICS

The single knob bedknife−to−reel adjustment system incorporated in this cutting unit simplifies the adjustment procedure needed to deliver optimum mowing performance. The precise adjustment possible with the single knob/bedbar design gives the necessary control to provide a continual self−sharpening action — thus maintaining sharp cutting edges, assuring good quality−of−cut, and greatly reducing the need for routine backlapping.

In addition, the rear roller positioning system permits optimum bedknife attitude and location for varying height−of−cuts and turf conditions.

CUTTING UNIT DAILY ADJUSTMENTS

Prior to each day's mowing, or as required, each cutting unit must be checked to verify proper bedknife−to−reel contact. **This must be performed even though quality of cut is acceptable.**

1. Lower cutting units onto a hard surface, shut off engine and remove key from ignition.

2. Slowly rotate reel in reverse direction listening for reel−to−bedknife contact. If no contact is evident, turn bedknife adjusting knob clockwise, one click at a time, until light contact is felt and heard.

3. If excessive contact is felt, turn bedknife adjusting knob counterclockwise, one click at a time until no contact is evident. Then turn bedknife adjusting knob one click at a time clockwise, until light contact is felt and heard.

IMPORTANT: Light contact is preferred at all times. If light contact is not maintained, bedknife / reel edges will not sufficiently self−sharpen and dull cutting edges will result after a period of operation. If excessive contact is maintained, bedknife/reel wear will be accelerated, uneven wear can result, and quality of cut may be adversely affected.

Note: As the reel blades continue to run against the bedknife a slight burr will appear on the front cutting edge surface the full length of the bedknife. If a file is occasionally run across the front edge to remove this burr, improved cutting can be obtained.

After extended running, a ridge will eventually develop at both ends of the bedknife. These notches must be rounded off or filed flush with cutting edge of bedknife to assure smooth operation.

LUBRICATION

GREASING BEARINGS, BUSHINGS AND PIVOT POINTS

Each cutting unit has (6) grease fittings (with optional front roller installed) that must be lubricated regularly with No. 2 General Purpose Lithium Base Grease.

1. The grease fitting locations and quantities are: Bedknife adjuster (2), every 50 hours (Fig. 6); Reel bearings (2) and front and rear rollers (2 ea.) (Fig. 7).

Note: Lubricate only one reel bearing grease fitting on each end of cutting unit.

IMPORTANT: Lubricating cutting units immediately after washing helps purge water out of bearings and increases bearing life.

1. Wipe each grease fitting with a clean rag.

2. Apply grease until pressure is felt against handle.

IMPORTANT: Do not apply too much pressure or grease seals will be permanently damaged.

3. Wipe excess grease away.

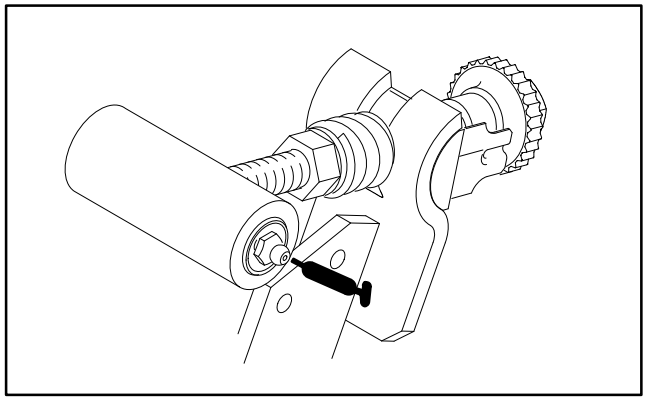

Figure 6
Grease every 50 hours

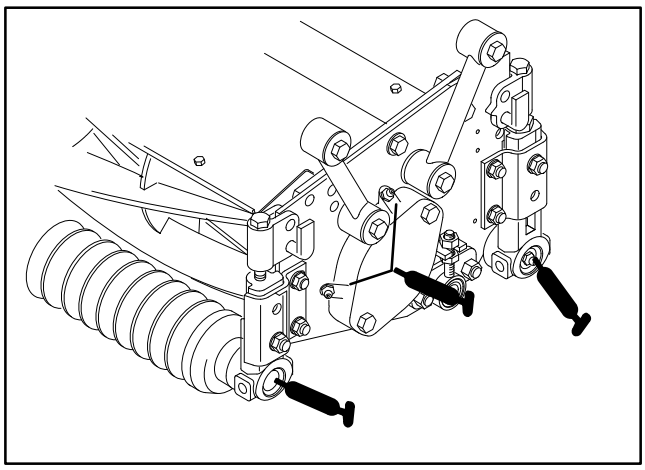

Figure 7
Grease every 8 hours

BACKLAPPING CUTTING UNITS

DANGER

TO AVOID PERSONAL INJURY OR DEATH:

- **Never place hands or feet in reel area while engine is running.**
- **While backlapping, reels may stall and then restart.**
- **Do not attempt to restart reels by hand or foot.**
- **Do not adjust reels while engine is running.**
- **If reel stalls, stop engine before attempting to clear reel.**

1. Position machine on a clean, level surface, lower the cutting units, stop the engine, engage parking brake and remove key from ignition switch.

2. Rotate backlap knob, to backlap position. Rotate reel speed knob to position 1.

3. Make initial reel to bedknife adjustments appropriate for backlapping on all cutting units. Start engine and set engine to low idle speed.

4. Engage reels.

5. Apply lapping compound with long handled brush.

CAUTION

Be careful when lapping the reel because contact with the reel or other moving parts can result in personal injury.

6. To make an adjustment to the cutting units while backlapping, turn reels and engine OFF. After adjustments have been completed, repeat steps 4−6.

7. When backlap operation is completed, rotate backlap knob to MOW position, set reel speed control to desired mowing setting and wash all lapping compound off cutting units.

Note: Additional instructions and procedures on Backlapping are available in the TORO Sharpening Reel & Rotary Mowers Manual Form No. 80−300SL.

NOTE: For a better cutting edge, run a file across the front face of the bedknife when the lapping operation is completed. This will remove any burrs or rough edges that may have built up on the cutting edge.

The Toro Commercial Products Two Year Limited Warranty

The Toro Company warrants your 1996 or newer Toro Commercial Product ("Product") purchased after January 1, 1997, to be free from defects in materials or workmanship for the period of time listed below. Where a warrantable condition exists, Toro will repair the Product at no cost to you including diagnosis, labor, parts, and transportation. This warranty begins on the date the Product is delivered to the original retail purchaser.

Warranty Duration: Two years or 1500 operational hours*, whichever occurs first.
***Product equipped with hour meter**

Owner Responsibilities:

As the Product owner, you are responsible for required maintenance and adjustments stated in your Owner's Manual. Failure to perform required maintenance and adjustments can be grounds for disallowing a warranty claim.

Instructions for Obtaining Warranty Service:

You are responsible for notifying the Commercial Products Distributor or Authorized Commercial Products Dealer from whom you purchased the Product as soon as you believe a warrantable condition exists.

If you need help locating a Commercial Products Distributor or Authorized Dealer, or if you have questions regarding your warranty rights or responsibilities, you may contact us at:

Toro Commercial Products Service Department
8111 Lyndale Avenue South
Minneapolis, MN, 55420–1196
Telephone: (612) 888–8801
Facsimile: (612) 887–8258
E–Mail: Commercial.Service@Toro.Com

Maintenance Parts:

Parts scheduled for replacement as required maintenance ("Maintenance Parts"), are warranted for the period of time up to the scheduled replacement time for that part.

Items/Conditions Not Covered:

Not all product failures or malfunctions that occur during the warranty period are defects in materials or workmanship. The items / conditions listed below are not covered by this warranty:

- Product failures which result from the use of non–Toro replacement parts, or from installation and use of add–on, modified, or unapproved accessories are not covered.
- Product failures which result from failure to perform required maintenance and/or adjustments are not covered.
- Product failures which result from operating the Product in an abusive, negligent or reckless manner are not covered.
- This warranty does not apply to parts subject to consumption through use unless found to be defective. Examples of parts which are consumed, or used up, during normal Product operation include, but are not limited to, blades, reels, bedknives, tines, spark plugs, castor wheels, tires, filters, belts, etc.
- This warranty does not apply to failures caused by outside influence. Items considered to be outside influence include, but are not limited to, weather, storage practices, contamination, use of unapproved coolants, lubricants, additives, or chemicals, etc.
- This warranty does not apply to normal "wear and tear" items. Normal "Wear and Tear" includes, but is not limited to, damage to seats due to wear or abrasion, worn painted surfaces, scratched decals or windows, etc.

Other Legal Disclaimers:

The above remedy of product defects through repair by an authorized distributor or dealer is the purchaser's sole remedy for any defect. This warranty gives you specific legal rights, and you may also have other rights which vary from state to state.

Except for the Emissions warranty referenced below, if applicable, there is no other express warranty. All implied warranties of merchantability and fitness for use are limited to the duration of the express warranty.

Some states do not allow limitations on how long an implied warranty lasts, so the above limitation may not apply to you.

The Toro Company is not liable for indirect, incidental or consequential damages in connection with the use of the Product, including any cost or expense of providing substitute Product or service during periods of malfunction or non–use.

Some states do not allow the exclusion of incidental or consequential damages, so the above exclusion may not apply to you.

Note to California residents: The Emissions Control System on your Product may be covered by a separate warranty meeting requirements established by the U.S. Environmental Protection Agency (EPA), or the California Air Resources Board (CARB). The hour limitations set forth above do not apply to the Emissions Control System Warranty. Refer to the California Emission Control Warranty Statement printed in your Owner's Manual or contained in the engine manufacturer's documentation for details.