FORM NO. 3321–776

TORO®

MODEL NO. 08885–90001 & UP

PARTS CATALOG

SAND PRO® 3020

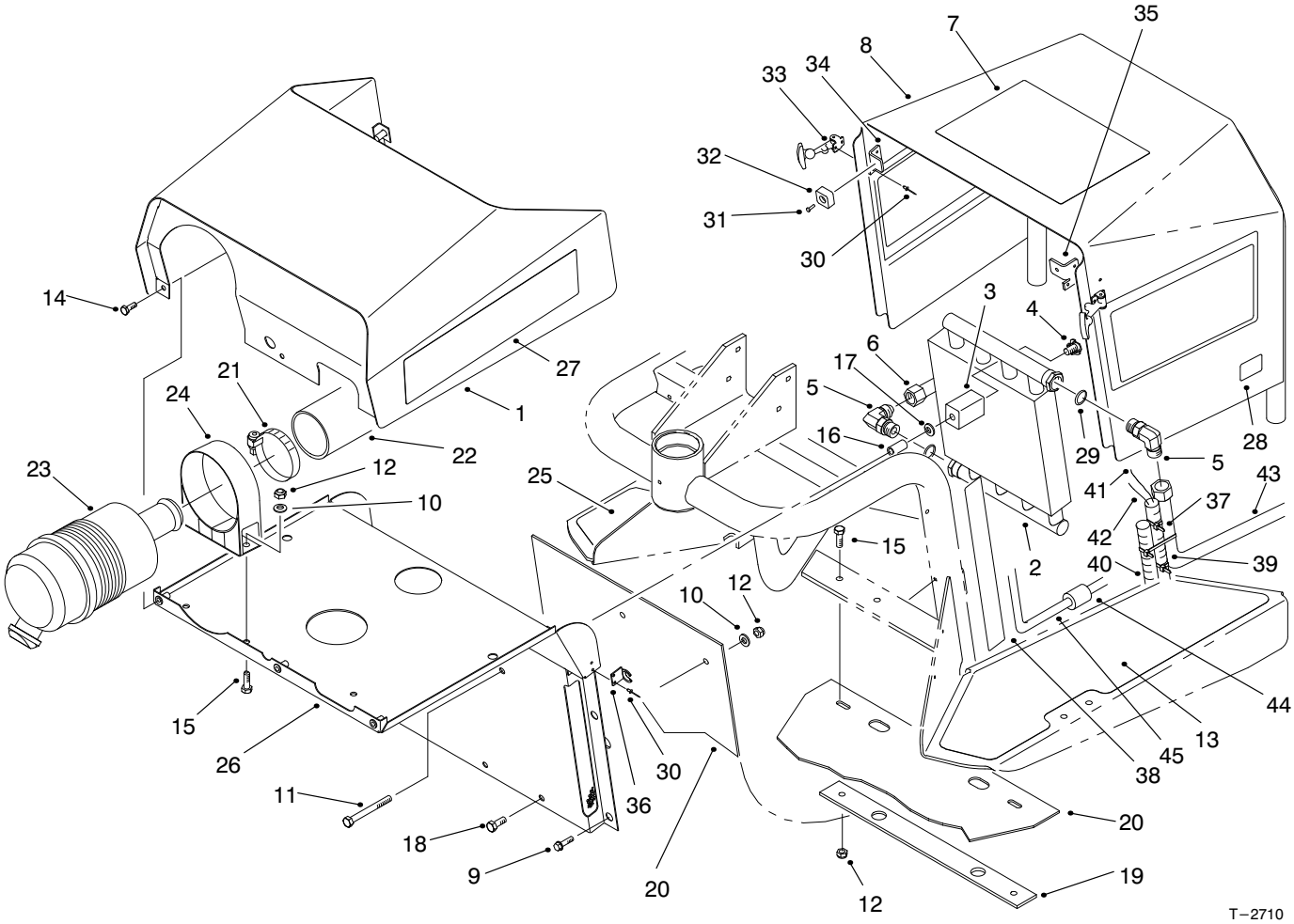

SHROUDING & OIL COOLER ASM

Ref. No.	Part No.	Description	No. Used
1	99–1644	Hood	1
2	92–8997	Cooler–Oil	1
3	85–9550	Clamp–Rubber	2
4	85–9670	T–Nut	2
5	353–371	Fitting–Hydraulic 90° (Incl. Ref. #29)	2
6	95–0643	Tube–Valve to Cooler	1
7	92–8985	Decal–Operating	1
8	95–0610	Asm–Cover (Incl. Ref. #7, 28, & 30–35)	1
9	46–8560	Screw–HFH	6
10	3256–23	Washer–Flat	4
11	322–14	Screw–HH	2
12	3296–29	Nut–Lock	6
13	92–7159	Tread–Floor, LH	1
14	3234–33	Screw–HFH	3
15	322–5	Screw–HH	4
16	95–5807	Spacer	2

Ref. No.	Part No.	Description	No. Used
17	3256–82	Washer–Flat	2
18	322–2	Screw–HH	2
19	95–0620	Strip–Retainer	1
20	95–5826	Shield–Rubber	1
21	2412–92	Clamp–Hose	2
22	95–0582	Hose–Air	1
23	95–5805	Asm–Air Cleaner	1
24	95–5806	Asm–Band, Mounting	1
25	92–7158	Tread–Floor, RH	1
26	95–5817	Shield–Front (Incl. Ref. #30 & 36)	1
27	95–0607	Decal–Sand Pro 3020	2
28	93–7252	Decal–CE Mark	1
29	237–79	O–Ring	2
30	3269–8	Rivet–Pop	6
31	3295–26	Rivet–Semi Tubular	2
32	94–1392	Pad–Rubber	2
33	117344	Handle–Latch	2

© The TORO Company – 1998
All Rights Reserved

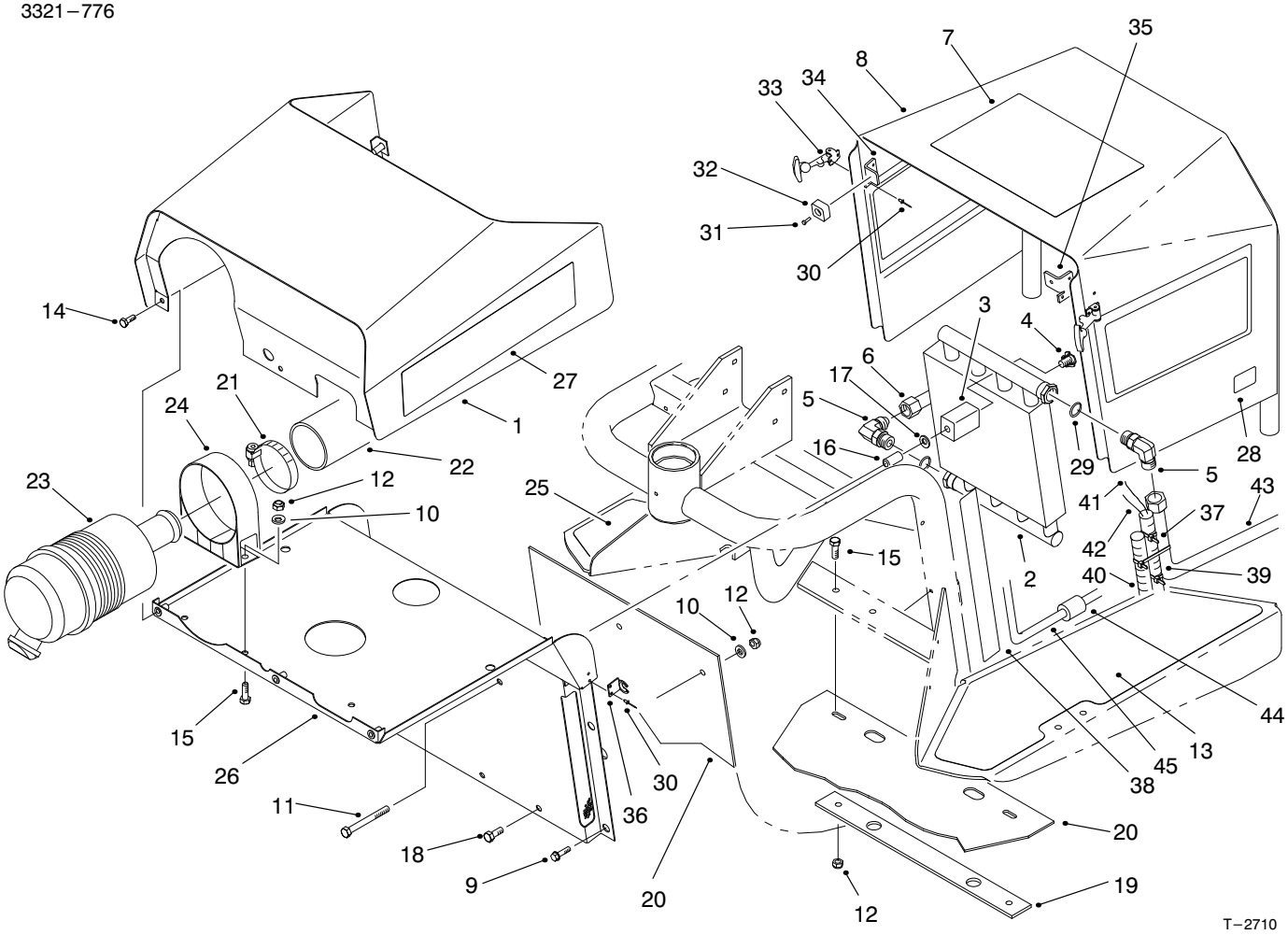

SHROUDING & OIL COOLER ASM (Continued)

Ref. No.	Part No.	Description	No. Used
34	95–0611	Bracket–RH	1
35	95–0612	Bracket–LH	1
36	249–40	Keeper	2
37	3290–379	Tie–Wire	3
38	95–5828	Strip–Wear	2
39	94–4519	Tube–Convoluted	1
40	95–0574	Wire Harness	1

Ref. No.	Part No.	Description	No. Used
41	95–5825	Asm–Wire	1
42	95–0599	Asm–Wire	1
43	95–0591	Hose–Hydraulic	1
44	38–3400	Snubber–Rubber	1
45	95–0563	Tube–Front, Motor LH	1
*	95–7861	Decal–Infield Pro 3020	2

* Not Illustrated

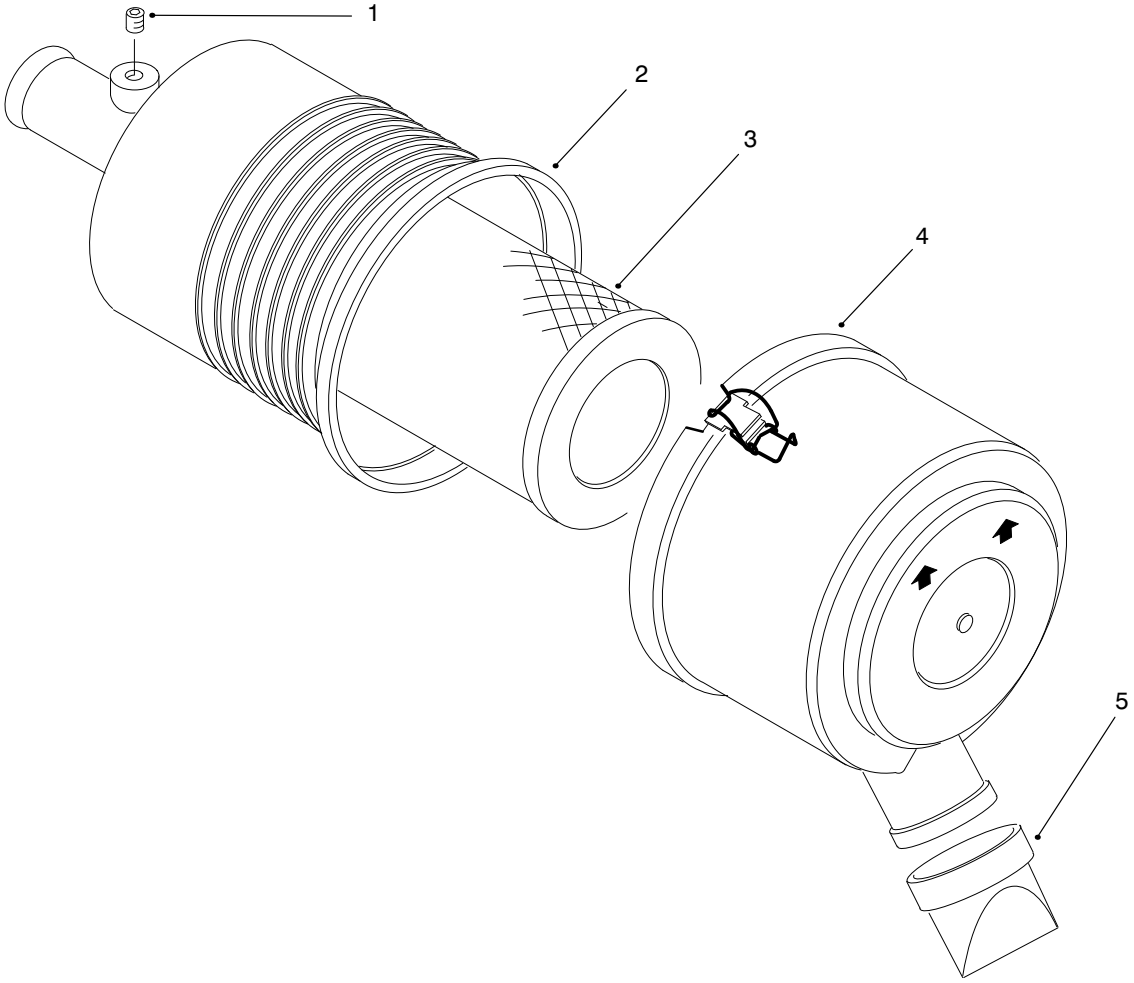

AIR CLEANER ASM NO. 95–5805

Ref. No.	Part No.	Description	No. Used
1	285–17	Plug	1
2		Asm–Body	1
3	93–2195	Element–Air Cleaner	1
4	94–3652	Asm–Cover	1
5	94–1414	Valve–Vacuator	1

* Not Illustrated

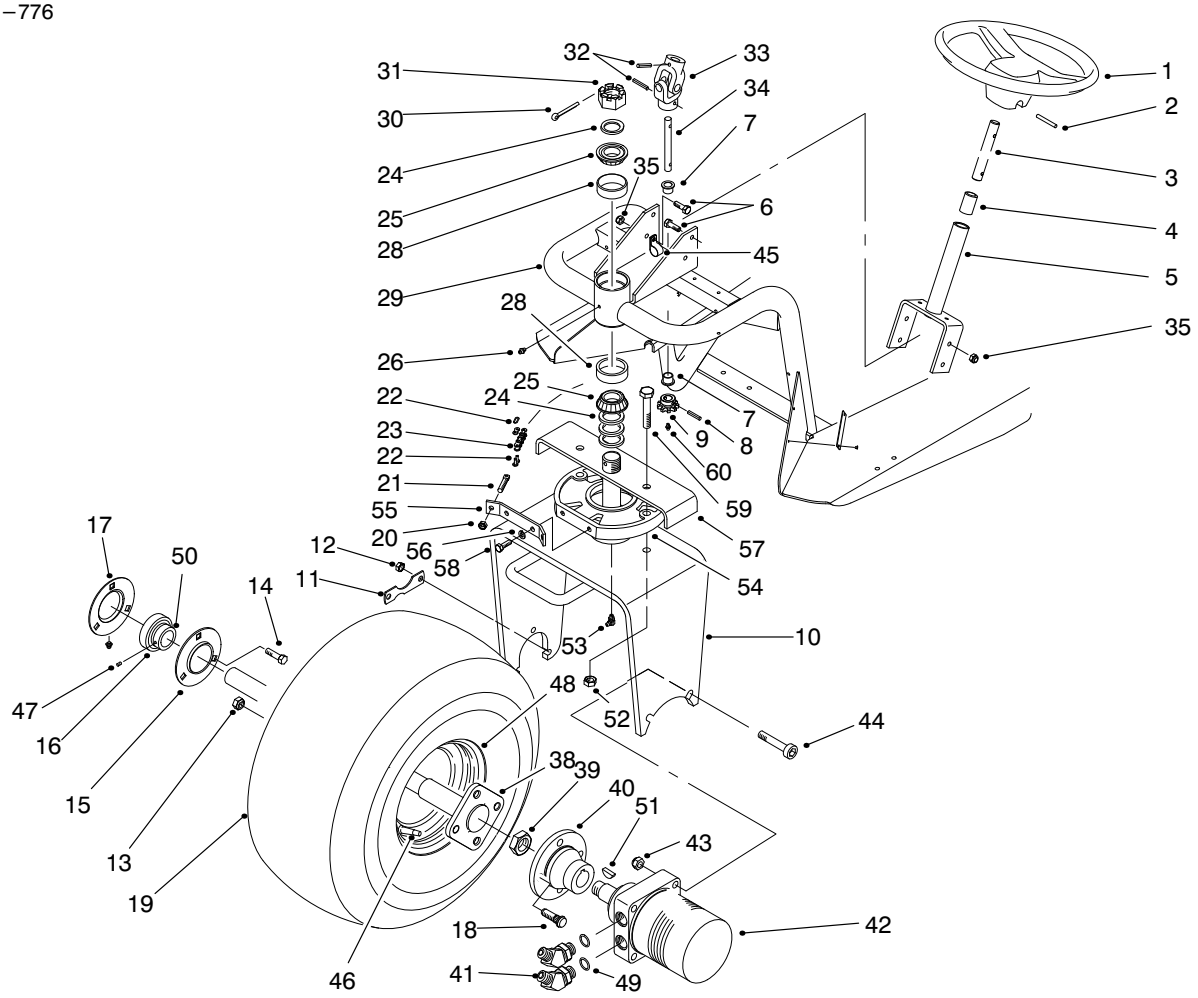

FRONT WHEEL & STEERING ASM

Ref. No.	Part No.	Description	No. Used
1	76–1420	Wheel–Steering	1
2	32121–111	Pin–Spiral	1
3	85–6610	Shaft–Steering Upper	1
4	256–185	Bushing–Sleeve	1
5	92–5035	Asm–Steering Shaft (Incl. Ref. #4)	1
6	322–5	Screw–HH	4
7	65–8770	Bushing–Flange	2
8	98–0973	Pin–Grooved	1
9	85–9180	Sprocket	1
10	98–0950	Fork	1
11	88–8350	Tab– Bearing	1
12	3296–39	Nut–Lock	3
13	242–50	Nut–Lug	4
14	323–29	Screw–HH	3
15	85–8950	Flangette–Standard	1
16	251–352	Asm–Bearing (Incl. Ref. #47 & 50)	1
17	85–8940	Flangette–Relube	1
18	10–6830	Stud–Drive	4
19	85–8290	Tire	1
20	3296–4	Nut–Lock	2
21	18–6380	Pin–Steering Adjustment	2
22	2710–11	Link–Connecting	2
23	92–5039	Chain	1
24	18–6320	Washer–Steering	4
25	254–70	Cone–Bearing	2

Ref. No.	Part No.	Description	No. Used
26	302–2	Fitting–Grease	1
28	254–61	Cup–Bearing	2
29	95–0600	Asm–Frame (Incl. Ref. #7)	1
30	3272–37	Pin–Cotter	1
31	32136–9	Nut–Slotted	1
32	32121–15	Pin–Spiral	2
33	85–9200	Knuckle–Steering	1
34	98–0928	Shaft–Steering, Lower	1
35	3296–29	Nut–Lock	4
38	92–8969	Spindle	1
39	26–3790	Nut–Lock	1
40	93–6838	Hub–Wheel	1
41	353–427	Fitting–Hydraulic 45° (Incl. Ref. #49)	2
42	75–9830	Motor–Hydraulic, Wheel (Incl. Ref. #51)	1
43	3296–23	Nut–Lock	2
44	3274–93	Screw–HSH	2
45	94–6821	R–Clamp	2
46	232–35	Stem–Valve	1
47		Screw–Set	2
48	94–6116	Rim–Wheel	1
49	237–80	O–Ring	2
50		Collar–Locking	1
51	3257–42	Key–Woodruff	1
52	3296–25	Nut–Lock	2

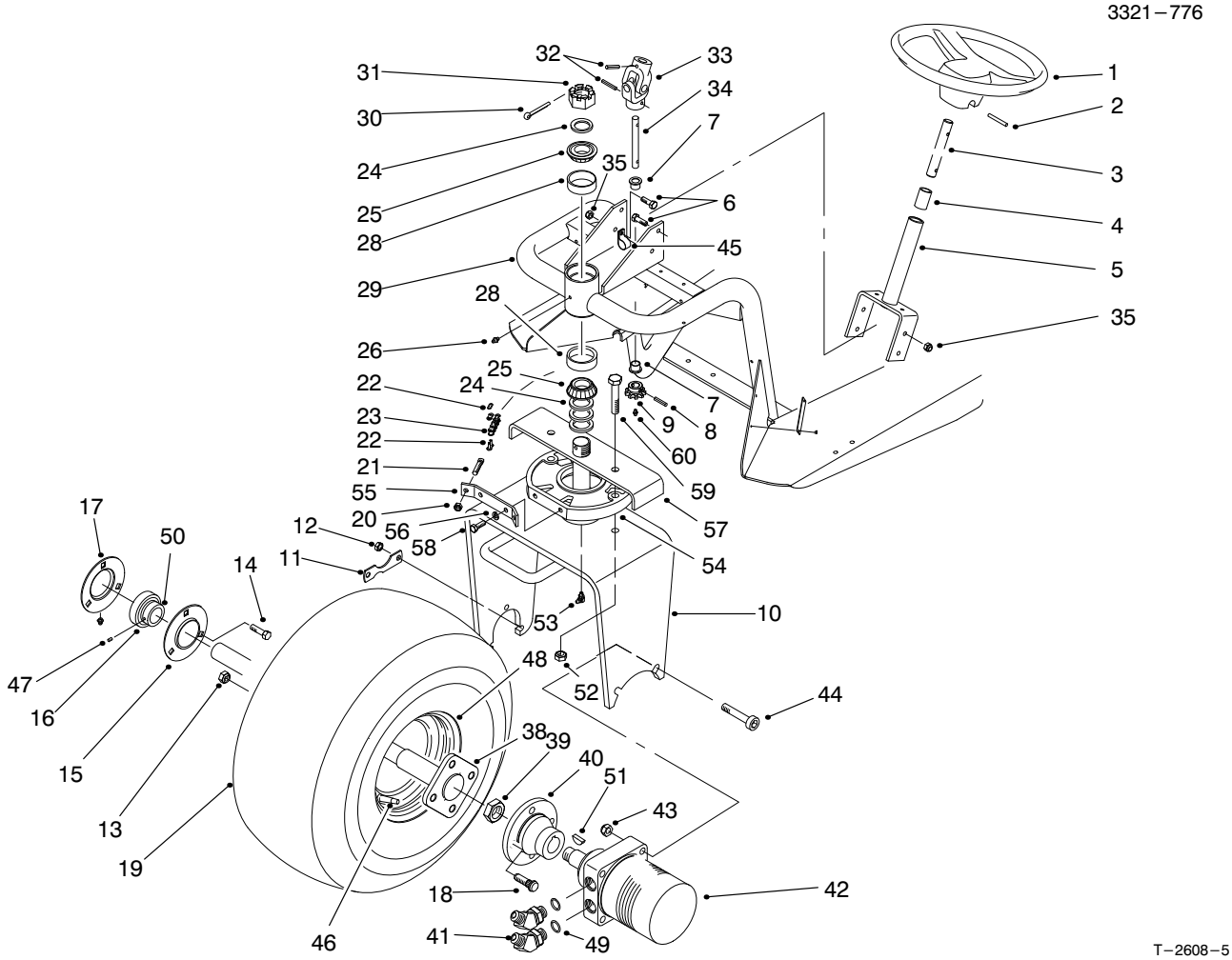

FRONT WHEEL & STEERING ASM (Continued)

Ref. No.	Part No.	Description	No. Used
53	302–33	Fitting–Grease	1
54	98–0924	Guide–Chain	1
55	98–0925	Bracket–Chain	1
56	3253–4	Washer–Lock	2

Ref. No.	Part No.	Description	No. Used
57	92–7179	Plate–Chain Stop	1
58	322–2	Screw–HH	2
59	325–10	Screw–HH	2
60	302–2	Fitting–Grease	1

3321−776

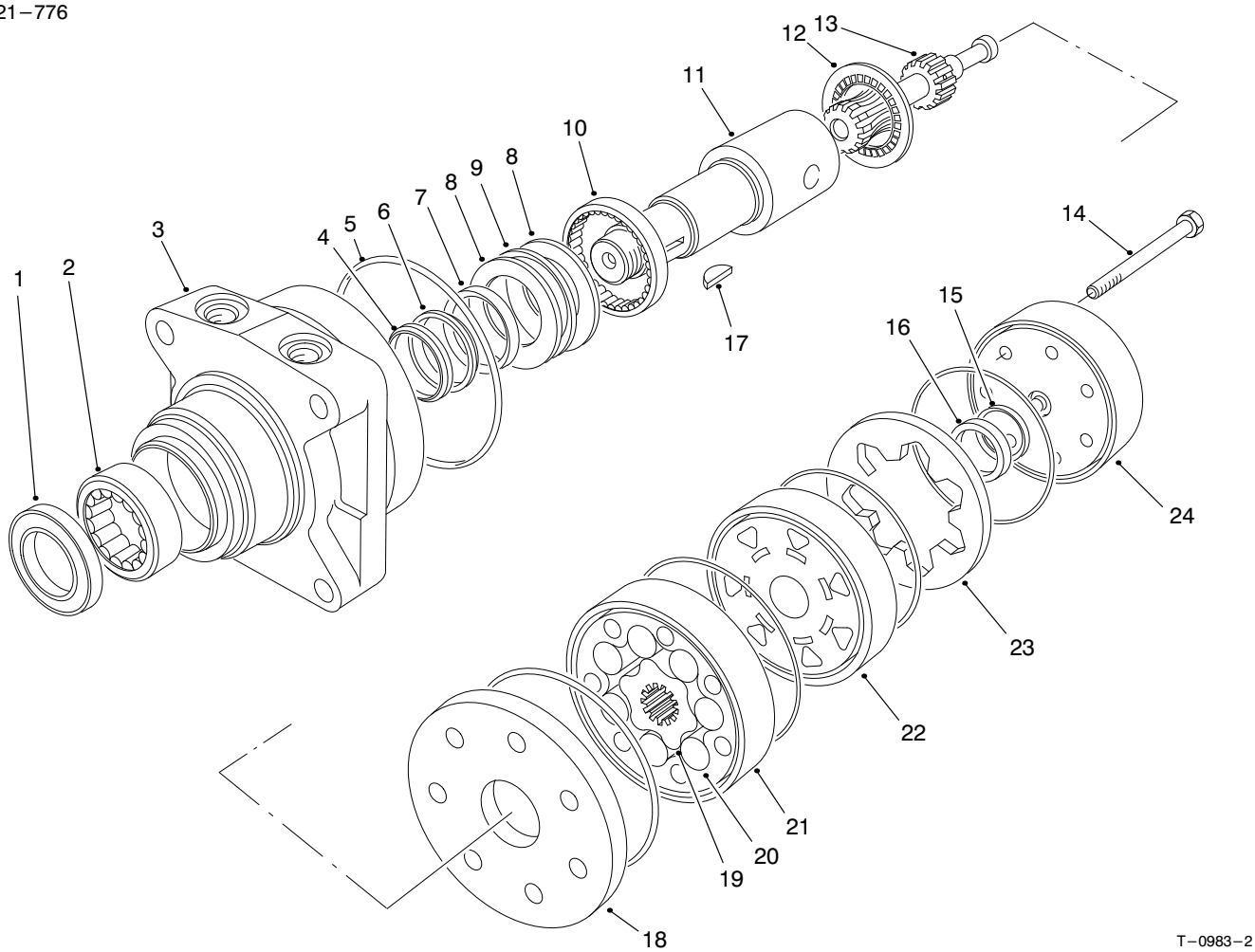

HYDRAULIC DRIVE MOTOR FRONT NO. 75−9830

Ref. No.	Part No.	Description	No. Used
1		Seal−Dirt & Water	1
2		Bearing	1
3		Housing	1
4		Washer−Backup	1
5		Seal−Rings	5
6		Washer−Backup	1
7		Seal−Inner	1
8		Washer−Thrust	2
9		Bearing−Thrust	1
10		Bearing	1
11	76−0860	Shaft−Coupling	1
12	76−0850	Bearing−Thrust	1
13	76−0820	Link−Drive	7
14	76−1030	Screw−HH	1
15		Seal−Commutator	1
16		Commutator	1

Ref. No.	Part No.	Description	No. Used
17	3257−42	Key−Woodruff	1
18	76−0870	Plate−Wear	1
19		Rotor	1
20		Vane	7
21		Stator	1
22	76−0840	Manifold	1
23		Ring−Commutator	1
24	76−0940	Asm−Cover, End	1
*	76−0950	Rotor Set (Incl. Ref. #19−21)	1
*	76−0880	Asm−Commutator (Incl. Ref. #15, 16 & 23)	1
*	94−8178	Kit−Seal (Incl. Ref. #1, 4−7 & 15)	1
*	76−0810	Asm−Housing (Incl. Ref. #2, 3 & 8−10)	1

* Not Illustrated

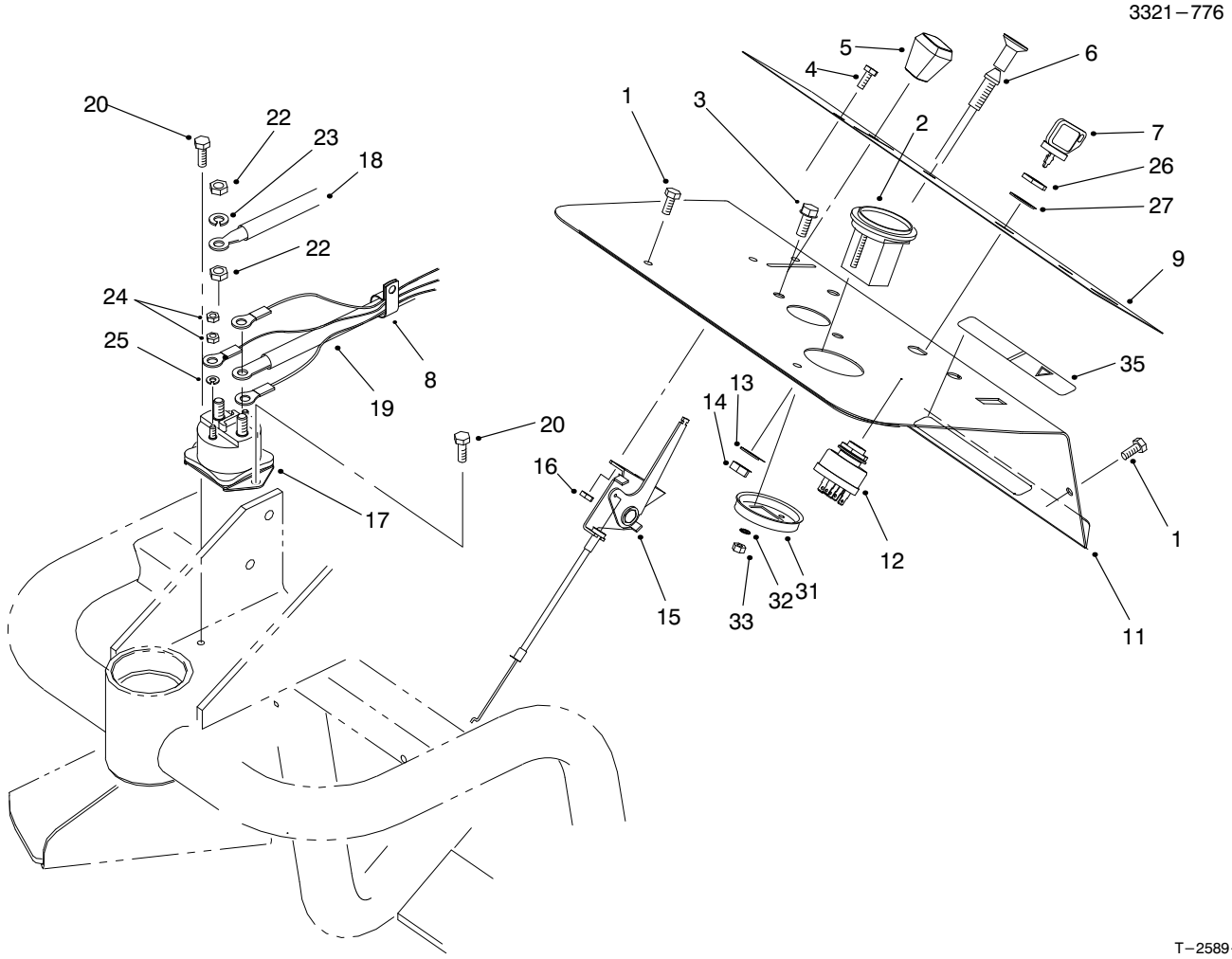

DASH PANEL ASM

Ref. No.	Part No.	Description	No. Used
1	3234–33	Screw–HH	4
2	66–2950	Asm–Hourmeter (Incl. Ref. #31–33)	1
3	32144–11	Screw–HFH.	2
4	32105–2	Screw–HH	2
5	66–0120	Knob–Throttle	1
6	95–0597	Asm–Choke Control	1
7	63–8360	Key–Ignition	2
9	95–0648	Decal–Dash	1
11	99–1646	Panel–Dash	1
12	83–0020	Asm–Ignition Switch (Incl. Ref. #26 & 27)	1
13	3254–6	Washer–Lock ITLW	1
14	3219–3	Nut–Hex.	1
15	95–0598	Control–Throttle	1
16	3296–12	Nut–Lock	2

Ref. No.	Part No.	Description	No. Used
17	28–4210	Solenoid–Starter	1
18	95–5825	Asm–Wire	1
19	95–0599	Asm–Wire	1
20	32104–95	Screw–Self Tapping	2
22	3218–13	Nut–Jam	2
23	3253–4	Washer–Lock	2
24	3219–14	Nut–Hex.	4
25	3253–17	Washer–Lock	2
26	218–461	Nut–Hex.	1
27	3254–5	Washer–Lock ITLW	1
31		Clamp–Mounting	1
32	3255–20	Washer–Lock ITLW	2
33	3217–25	Nut–Hex.	2
34	95–0574	Harness–Wire	1
35	93–9052	Decal–Shields	1

3321−776

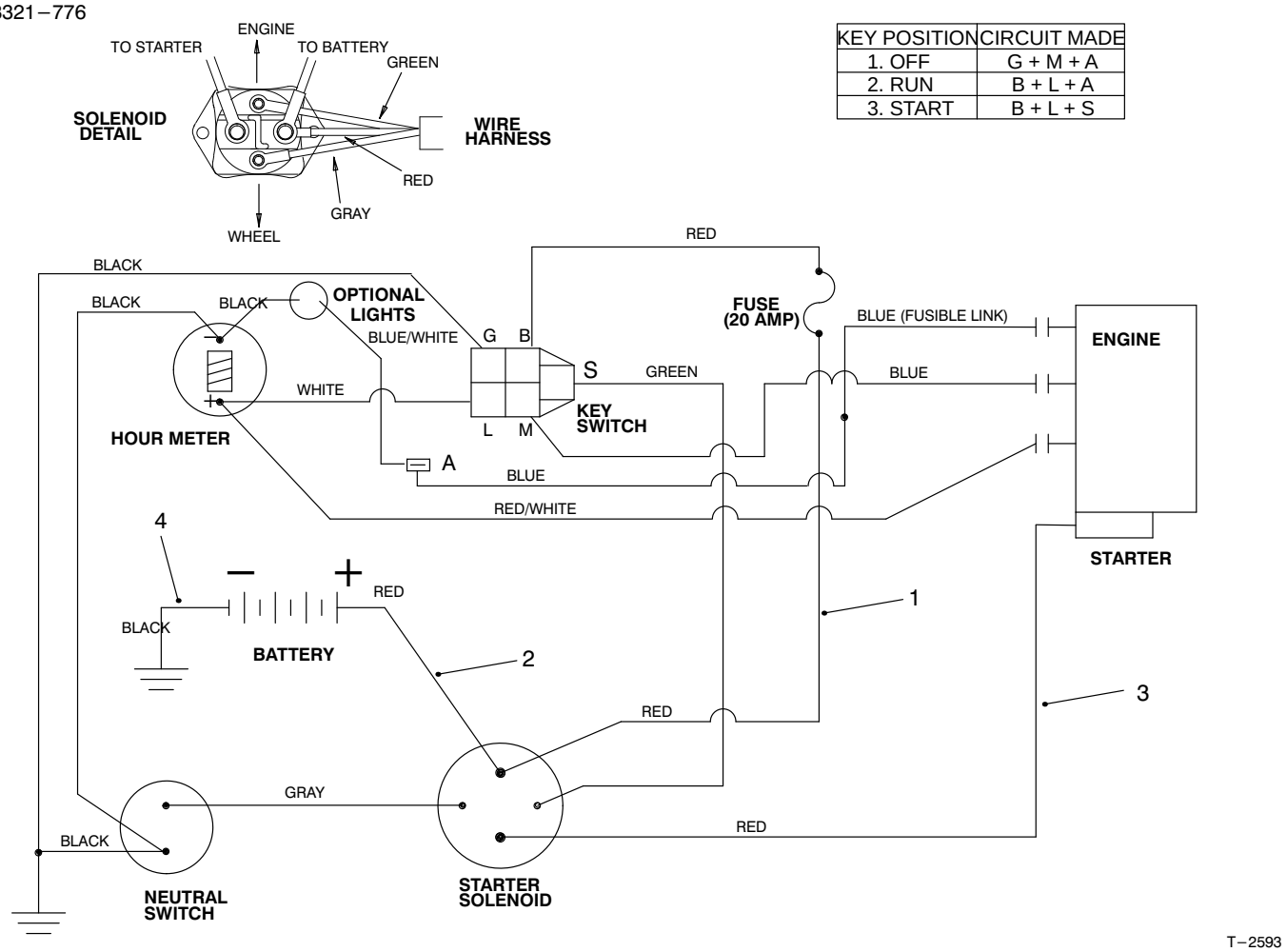

KEY POSITION	CIRCUIT MADE
1. OFF	G + M + A
2. RUN	B + L + A
3. START	B + L + S

T−2593

ELECTRICAL SCHEMATIC

Ref. No.	Part No.	Description	No. Used
1	95−0574	Harness−Wire	1
2	95−0599	Asm.−Wire	1

Ref. No.	Part No.	Description	No. Used
3	95−5825	Wire	1
4	86−7450	Wire−Ground, Battery	1

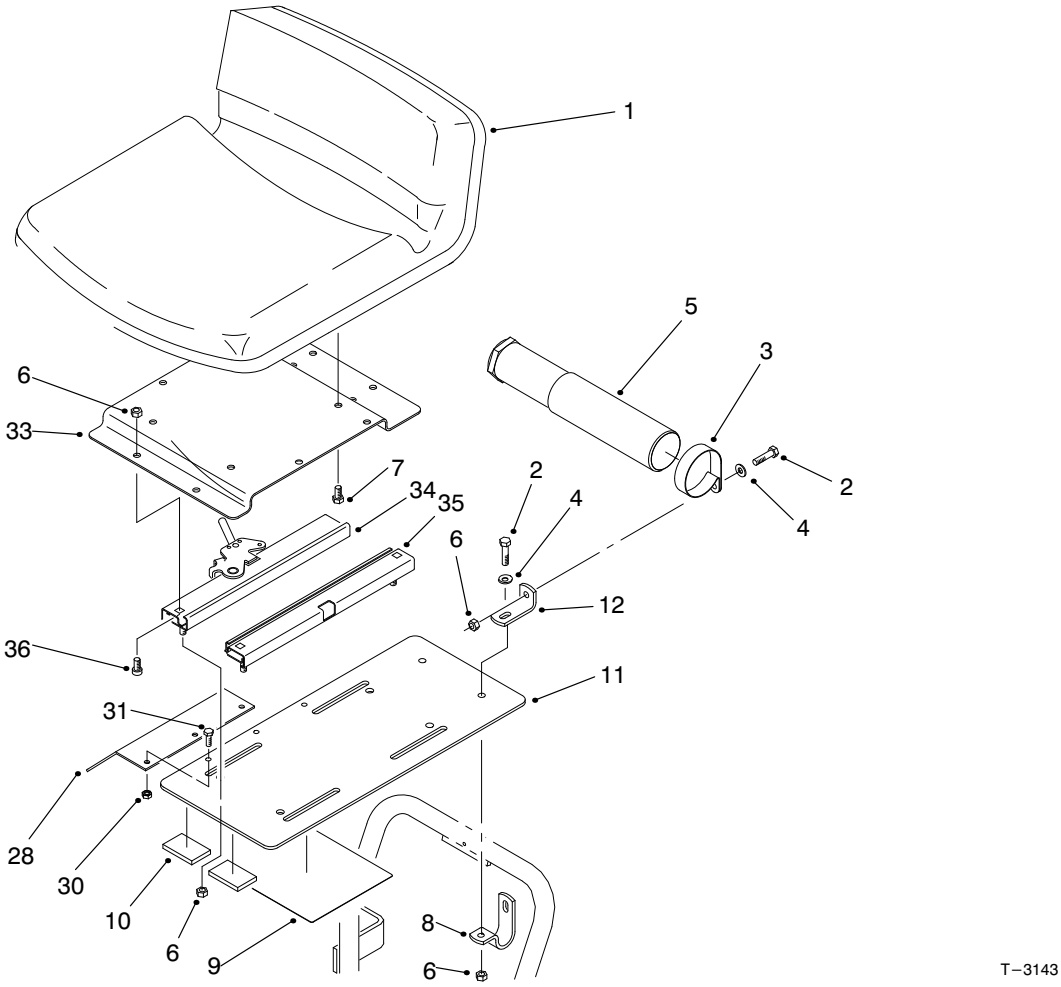

SEAT ASM

Ref. No.	Part No.	Description	No. Used
1	92−8976	Seat	1
2	322−6	Screw−HH	4
3	2412−133	Clamp−R	2
4	3256−3	Washer−Flat	4
5	74−0720	Tube−Manual	1
6	3296−29	Nut−Lock	12
7	3234−14	Screw−HH	4
8	92−8972	Clamp−Seat	2
9	95−0646	Decal−Service	1
9	93−7251	Decal−Service (Europe)	1

Ref. No.	Part No.	Description	No. Used
10	74−0340	Cushion−Rubber	2
11	95−0637	Plate−Seat	1
12	92−8973	Angle	2
28	95−5840	Shield−Base, Seat	1
30	3296−42	Nut−Lock	3
31	321−4	Screw−HH	3
33	86−7610	Plate−Seat	1
34	51−0790	Slider−Seat, Adjustment	1
35	51−0780	Slider−Seat	1
36	3274−12	Screw−HSH	4

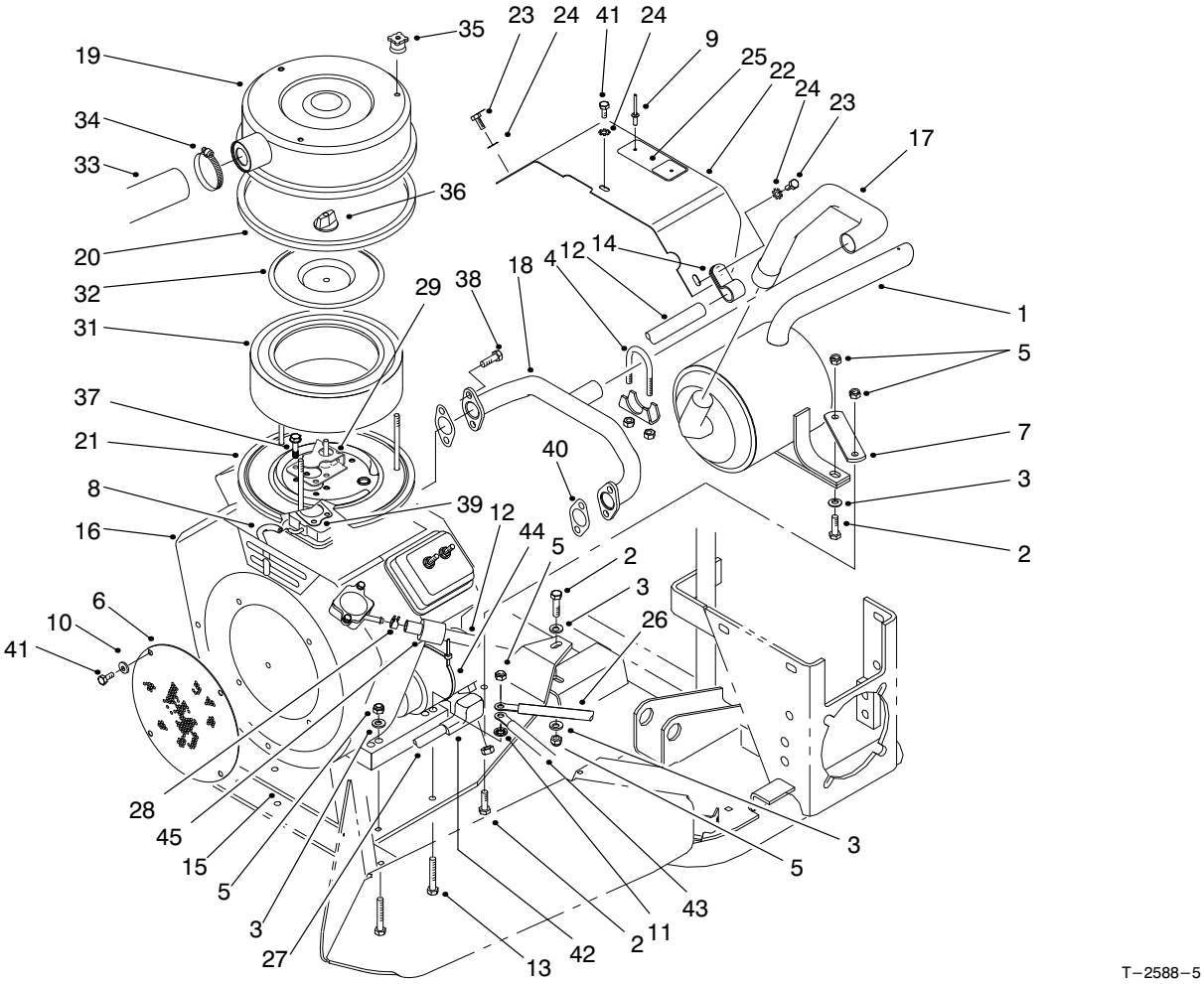

ENGINE INSTALLATION ASM

Ref. No.	Part No.	Description	No. Used
1	95–0552	Muffler	1
2	322–6	Screw–HH	3
3	3256–23	Washer–Flat	6
4	95–0586	Asm–Clamp, Muffler	2
5	3296–29	Nut–Lock	7
6	92–8996	Screen	1
7	95–0557	Bracket–Muffler	1
8	75–4705	Hose–Fuel	1
9	3269–32	Rivet–Pop	2
10	3256–1	Washer–Flat	4
11	3255–8	Washer–Lock, Ext. Tooth	1
12	95–0619	Hose–Gas Line	1
13	322–10	Screw–HH	4
14	2412–73	R–Clamp	1
15	95–0556	Base–Engine	1
16	98–0940	Asm–Engine	1
17	95–0551	Tube–Exhaust	1
18	95–0550	Asm–Manifold	1
19	85–8370	Asm–Cover, Air Cleaner	1
20	85–8360	Gasket–Ring	1
21	85–8430	Asm–Base, Air Cleaner	1
22	95–5827	Shield–Muffler (Incl. Ref. #9 & 25)	1

Ref. No.	Part No.	Description	No. Used
23	33113–012	Screw–HH	2
24	3255–7	Washer–Lock, Int. Tooth	3
25	95–0645	Plate–Hot Surface	1
26	86–7450	Wire–Battery, Ground	1
27	86–7570	Asm–Wire	1
28	2412–98	Clamp–Hose	1
29	98–0992	Shield–Carburetor, Inlet	1
31	83–1770	Element–Air Cleaner	1
32	85–0420	Plate–Cover	1
33	95–0582	Hose–Air	1
34	2412–92	Clamp–Hose	1
35	88–8640	Knob–Air Cleaner	3
36	85–0430	Knob–Air Cleaner	1
37	98–8154	Screw–Washer Face	5
38	85–0540	Screw	4
39	85–0470	Gasket–Carburetor	1
40		Gasket–Manifold	2
41	33113–008	Screw	5
42	83–2490	Boot	1
43	95–0574	Harness–Wire	1
44	3290–379	Tie–Cable	1
45	38–3400	Bumper	1

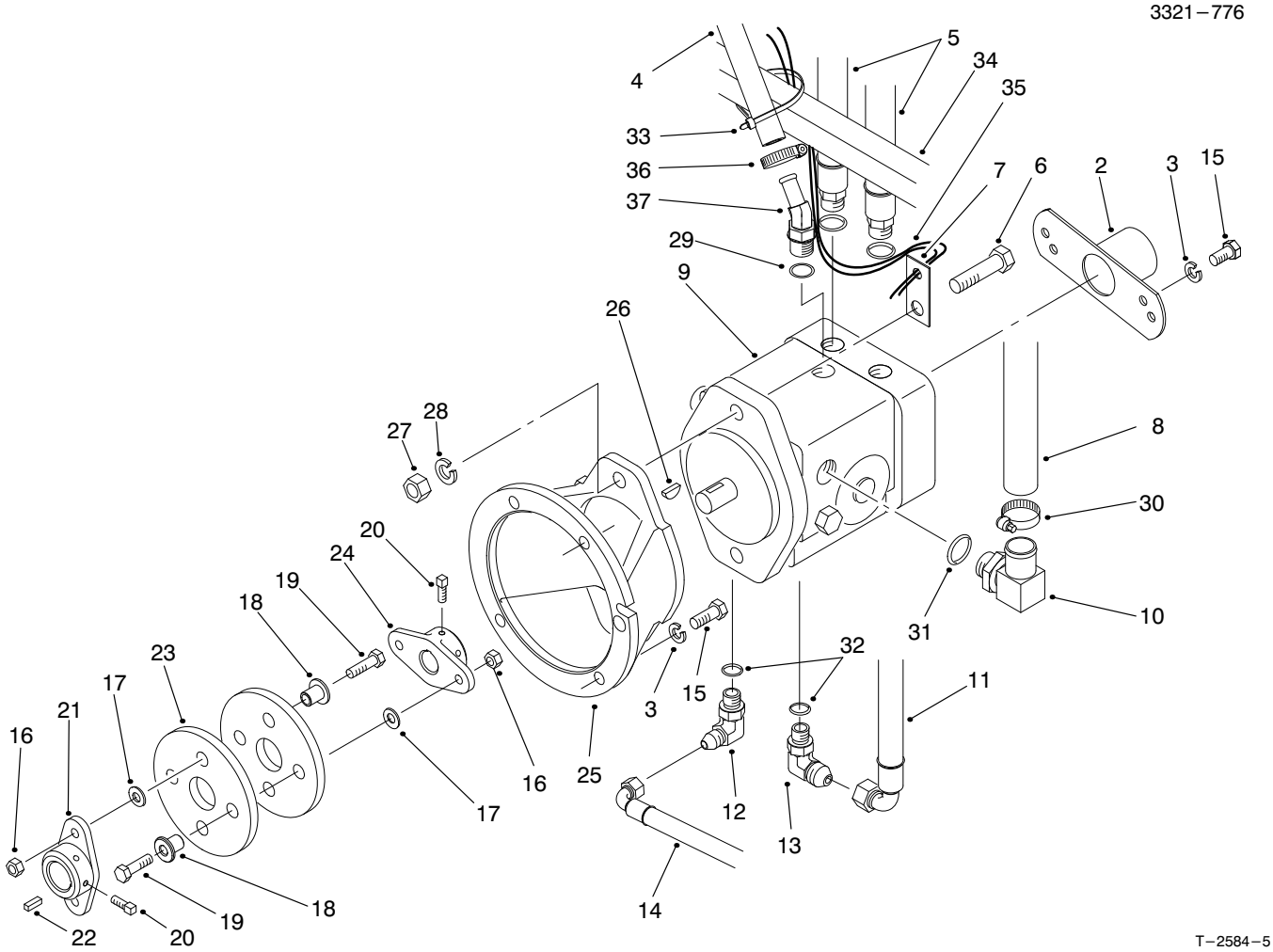

HYDRAULIC PUMP INSTALLATION ASM

Ref. No.	Part No.	Description	No. Used
2	95–0632	Asm–Cover	1
3	3253–5	Washer–Lock	6
4	98–8153	Hose–Return	1
5	95–0595	Asm–Hydraulic Hose (Incl. Ref. #29)	2
6	325–7	Screw–HH	2
7	26–2950	Standoff–Wire	1
8	95–0555	Hose–Suction	1
9	95–0587	Asm–Hydraulic Pump (Incl. Ref. #26)	1
10	95–0629	Fitting–Hose, Push On (Incl. Ref. #31)	1
11	95–0592	Hose–Hydraulic	1
12	353–511	Fitting–Hydraulic 90° (Incl. Ref. #32)	1
13	353–374	Fitting–Hydraulic 90° (Incl. Ref. #32)	1
14	95–0591	Hose–Hydraulic	1
15	323–6	Screw–HH	6
16	3296–29	Nut–Lock	4
17	3256–23	Washer–Flat	4

Ref. No.	Part No.	Description	No. Used
18	71–4411	Spacer–Coupling	4
19	322–17	Screw–HH	4
20	3241–5	Screw–Set, Square Hd.	4
21	27–1960	Hub–Engine	1
22	10–7070	Key–Square	1
23	80–8650	Coupling–Rubber	2
24	49–9600	Hub–Pump	1
25	95–0631	Mount–Pump	1
26	3257–32	Key–Woodruff	1
27	3217–9	Nut–Hex.	2
28	3253–7	Washer–Lock	2
29	237–79	O–Ring	3
30	2412–129	Clamp–Hose	1
31	237–80	O–Ring	1
32	237–42	O–Ring	2
33	3290–378	Tie–Cable	1
34	22–4670	Hose–Hydraulic	2
35	95–0574	Harness–Wire	1
36	2412–36	Clamp	1
37	354–126	Fitting–Barb (Incl. Ref. #29)	1

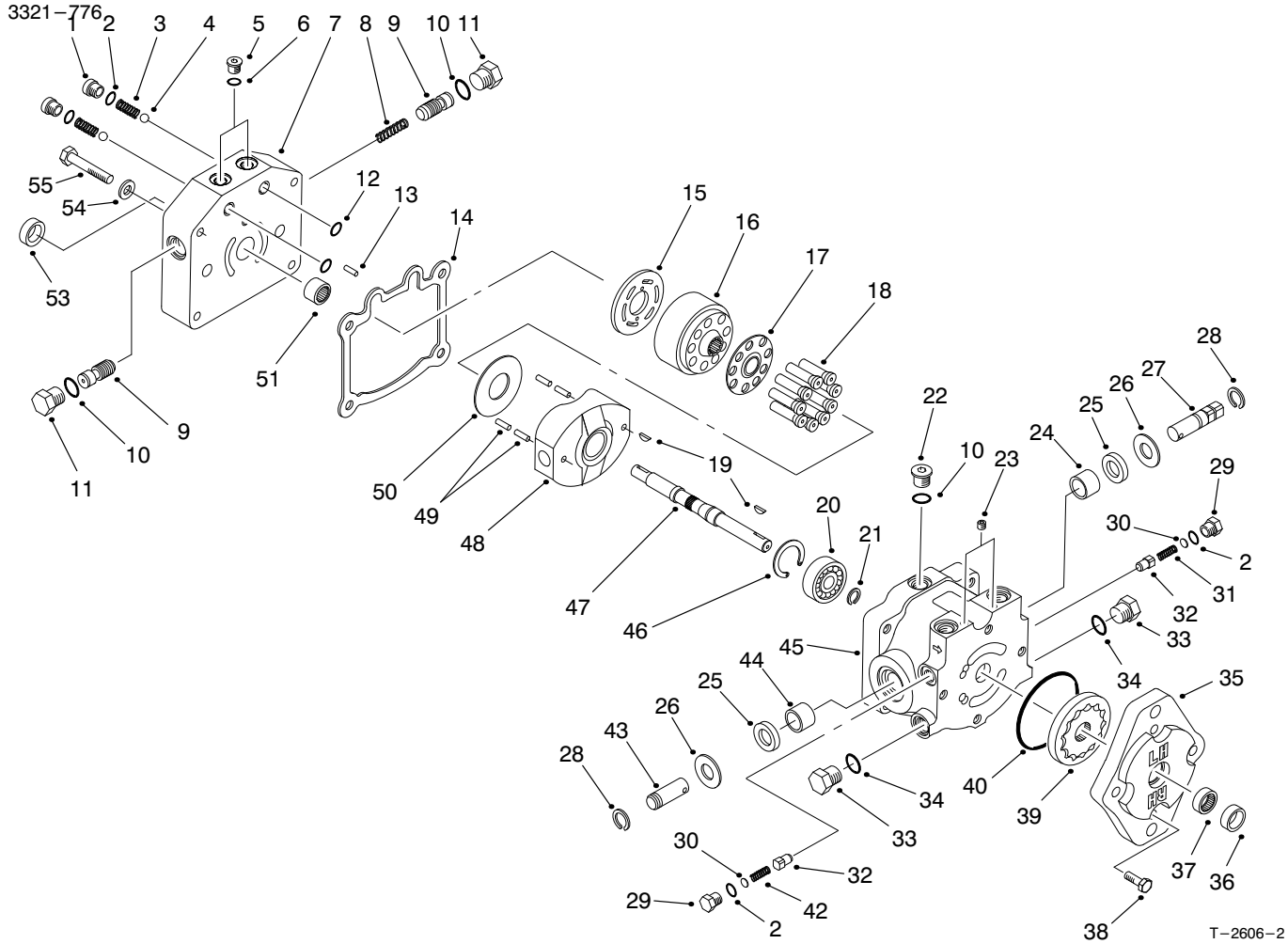

HYDRAULIC PUMP ASM NO. 95–0587

Ref. No.	Part No.	Description	No. Used
1	25–2650	Plug	2
2	237–86	O–Ring	4
3	25–2640	Spring	2
4	25–2490	Ball	2
5	92–8776	Plug (Incl. Ref. #6)	2
6	92–8777	O–Ring	2
7	95–5808	Cap–End	1
8	95–5815	Spring–Valve, Acceleration	1
9	95–5814	Valve–Acceleration	2
10	237–79	O–Ring	3
11	95–5816	Plug (Incl. Ref. #10)	2
12	237–30	O–Ring	2
13	25–2430	Pin	1
14	25–2400	Gasket–Cap, End	1
15	95–5811	Plate–Valve	1
16	25–2600	Kit–Cylinder Block (Incl. Ref. #17–18)	1
17		Retainer–Slipper	1
18		Asm–Piston	9
19	3257–32	Key–Woodruff	2
20	95–5809	Ball Bearing	1
21	95–5813	Ring–Retaining	1
22	353–988	Plug (Incl. Ref. #10)	1

Ref. No.	Part No.	Description	No. Used
23	285–17	Plug–Pipe	2
24	88–8190	Bearing–Journal	1
25	25–3210	Seal–Lip	2
26	25–2510	Washer	2
27	88–8180	Shaft–Trunnion	1
28	32151–46	Ring–Retaining	2
29	25–2460	Plug (Incl. Ref. #2)	2
30	25–2470	Kit–Shim	2
31	25–2570	Spring	1
32	83–7260	Cone–Charge Relief	2
33	88–8210	Plug (Incl. Ref. #34)	2
34	237–80	O–Ring	2
35	25–2690	Housing–Pump, Charge	1
36	67–8060	Seal–Lip	1
37	67–8050	Bearing–Needle	1
38	322–4	Screw–HH	4
39	95–5812	Asm.–Gerotor	1
40	237–95	O–Ring	1
42	25–2480	Spring	1
43	25–2500	Shaft–Trunnion	1
44	252–82	Bearing–Needle	1
45	88–8170	Asm–Housing, Variable (Incl. Ref. #24, 25, & 44)	1
46	32120–11	Ring–Retaining	1

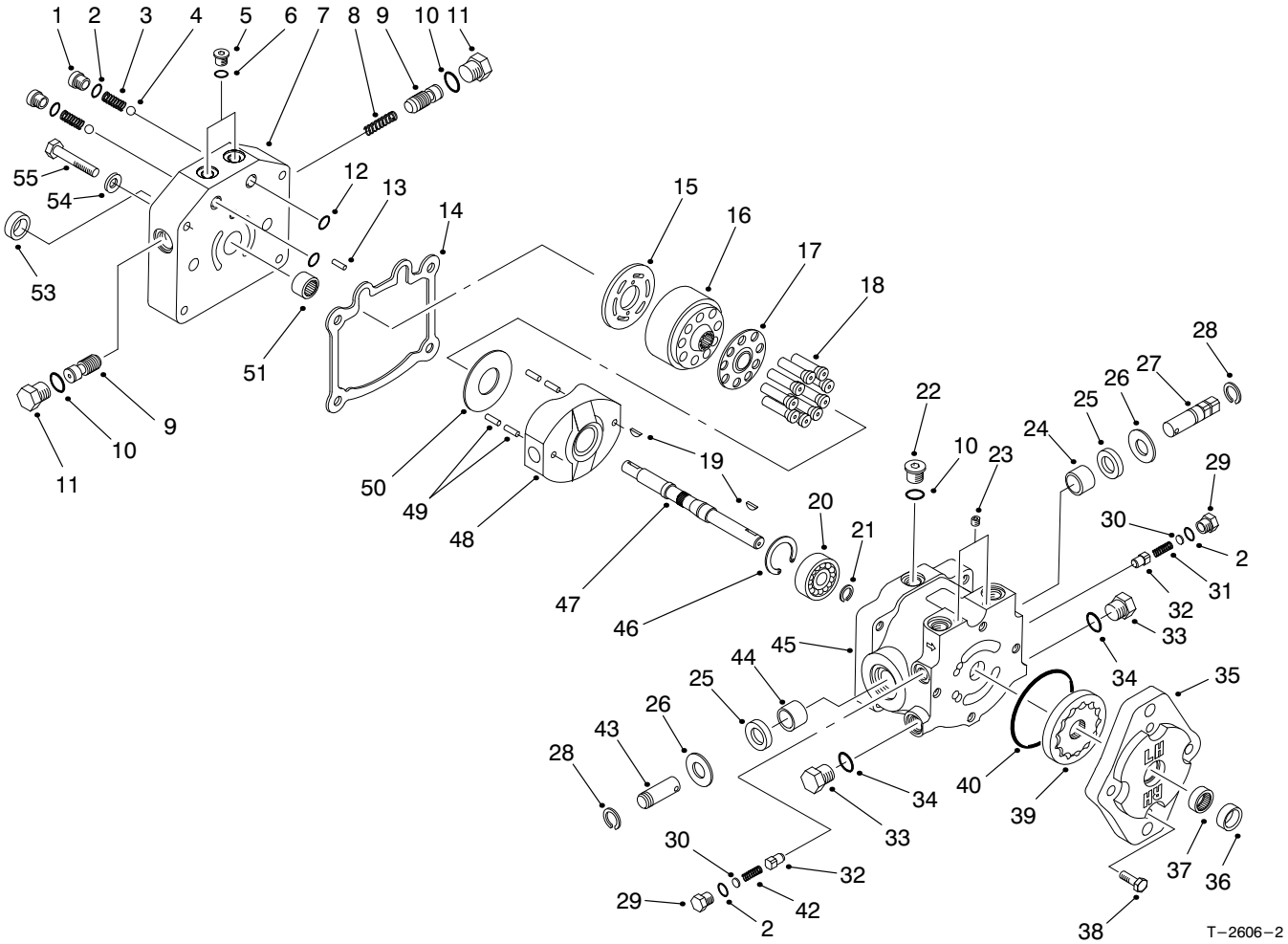

HYDRAULIC PUMP ASM NO. 95−0587 (Continued)

Ref. No.	Part No.	Description	No. Used
47	95−5810	Shaft	1
48	25−2450	Swashplate	1
49	32121−91	Pin−Spring	4
50	25−2380	Plate−Thrust	1
51	46−8400	Bearing−Roller	1
53	88−8230	Seal−Lip	1
54		Washer	1
55	323−45	Screw−HH	4

Ref. No.	Part No.	Description	No. Used
*	25−3180	Kit−Valve, Check (Incl. Ref. #1−4)	1
*	49−8520	Kit−Implement Relief (Incl. Ref. #2 & 29−32)	1
*	49−8510	Kit−Relief, Charge (Incl. Ref. #2, 29, 30 & 41−42)	1

* Not Illustrated

HYDRAULIC SCHEMATIC

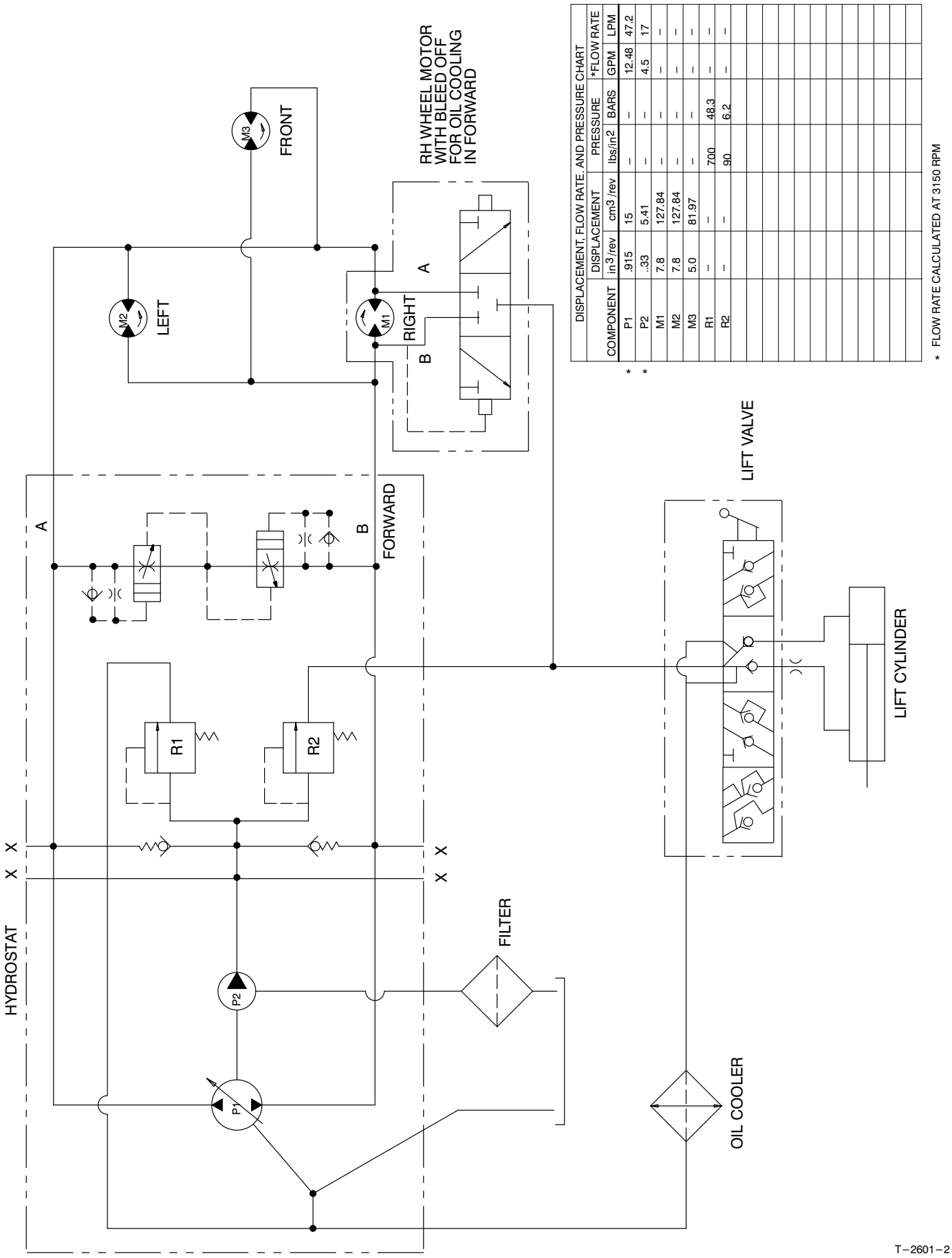

DISPLACEMENT, FLOW RATE, AND PRESSURE CHART						
COMPONENT	DISPLACEMENT		PRESSURE		*FLOW RATE	
	in^3/rev	cm^3/rev	lbs/in2	BARS	GPM	LPM
* P1	.915	15	–	–	12.48	47.2
* P2	..33	5.41	–	–	4.5	17
M1	7.8	127.84	–	–	–	–
M2	7.8	127.84	–	–	–	–
M3	5.0	81.97	–	–	–	–
R1	–	–	700	48.3	–	–
R2	–	–	90	6.2	–	–

* FLOW RATE CALCULATED AT 3150 RPM

T–2601–2

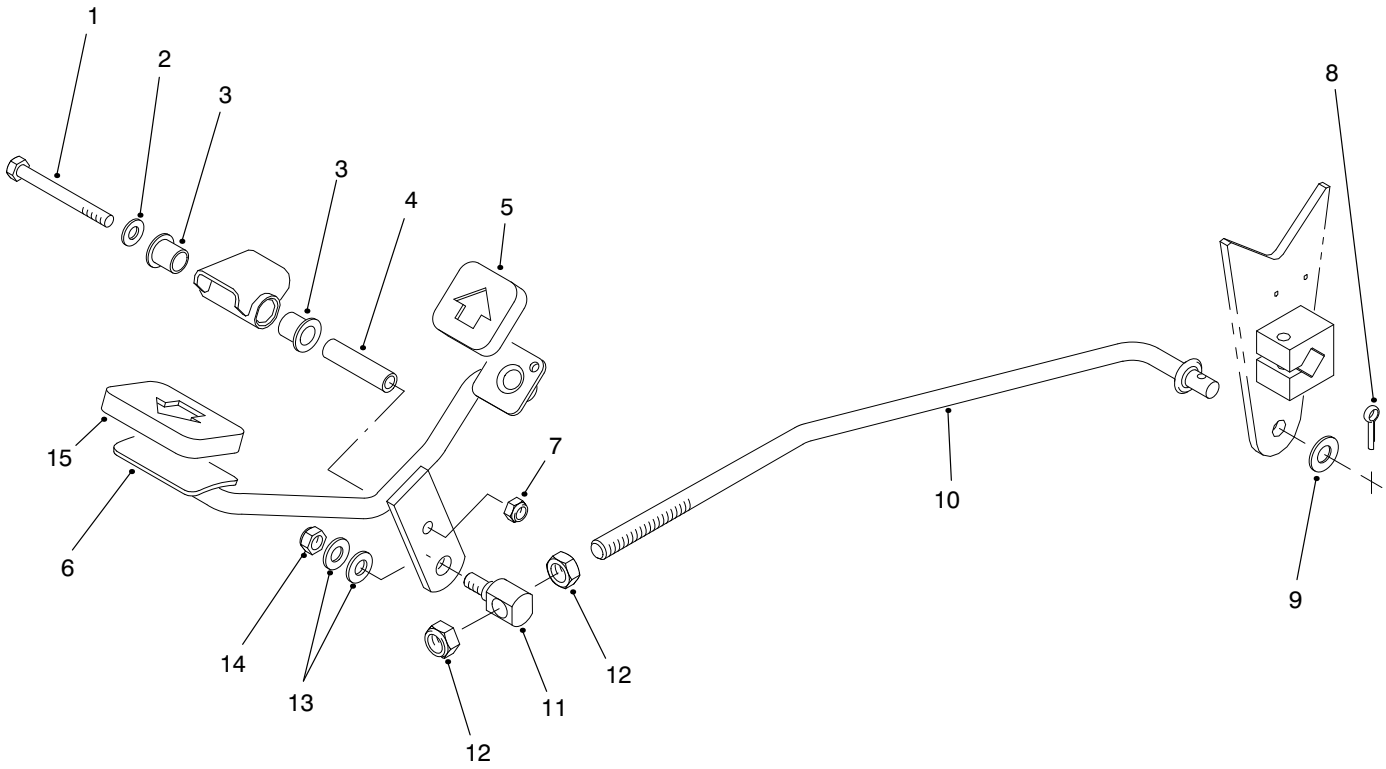

T–2582

TRACTION PEDAL ASM

Ref. No.	Part No.	Description	No. Used
1	322–14	Screw–HH	1
2	3256–23	Washer–Flat	1
3	256–219	Bushing–Flange	2
4	85–8960	Spacer	1
5	74–9110	Pad–Pedal, Reverse	1
6	92–2343	Pedal	1
7	3296–29	Nut–Lock	1
8	3272–16	Pin–Cotter	1

Ref. No.	Part No.	Description	No. Used
9	3256–25	Washer–Flat	1
10	95–0584	Rod–Pump, Control	1
11	92–2344	Stud–Adjuster, Trunnion	1
12	3218–5	Nut–Jam	2
13	3256–24	Washer–Flat	2
14	3296–39	Nut–Lock	1
15	74–9100	Pad–Pedal, Forward	1

3321–776

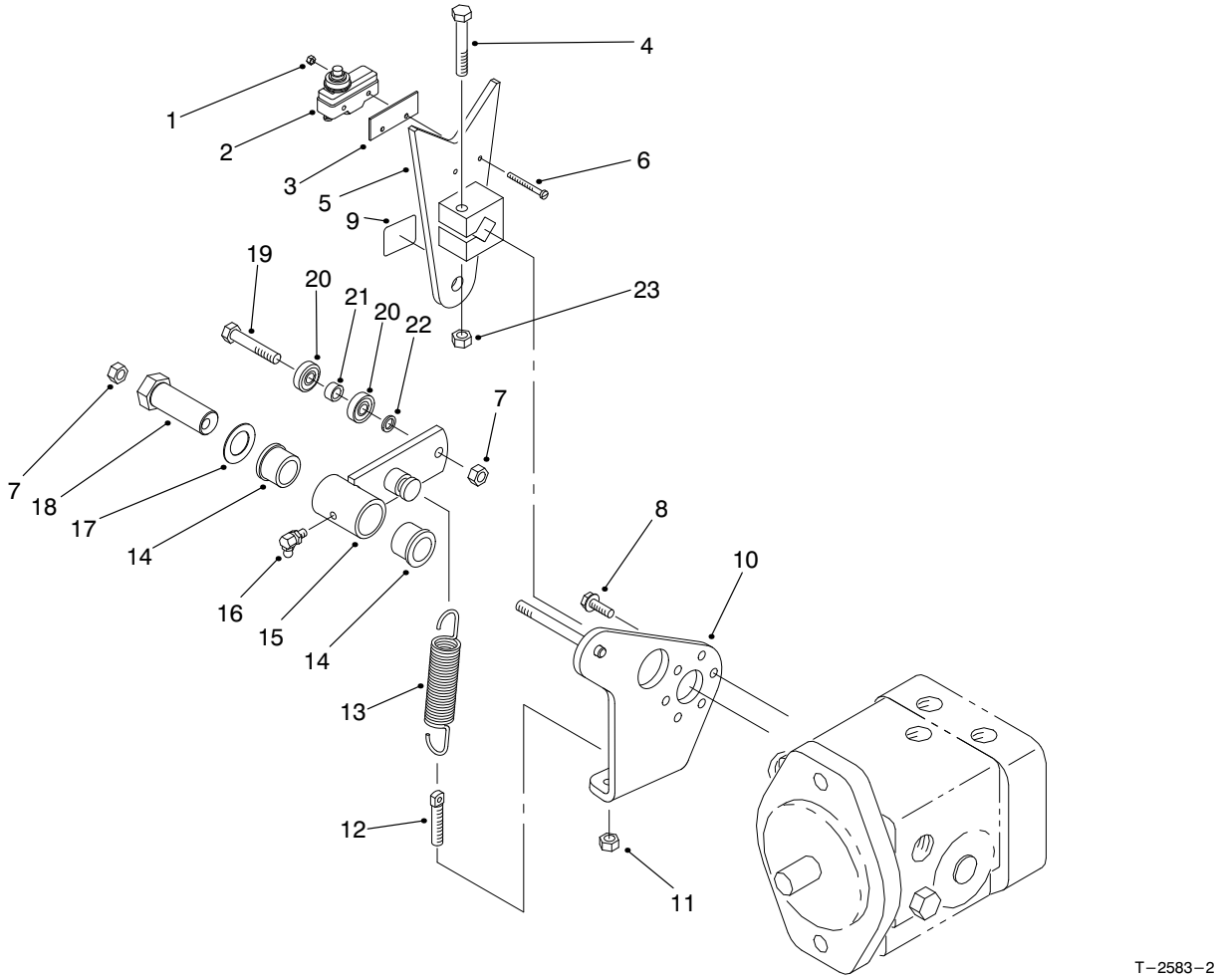

PUMP CONTROL LEVER ASM

Ref. No.	Part No.	Description	No. Used
1	3296–9	Nut–Lock	2
2	29–6163	Switch–Neutral	1
3	85–9150	Plate–Switch	1
4	323–10	Screw–HH	1
5	85–8300	Lever–Pump	1
6	32105–21	Screw–Machine	2
7	3296–29	Nut–Lock	2
8	49–2040	Screw–HFH	3
9	93–9051	Decal–Eccentric Bolt	1
10	95–0553	Plate–Pump	1
11	3296–4	Nut–Lock	1
12	18–6380	Pin–Steering, Adjust	1

Ref. No.	Part No.	Description	No. Used
13	85–9030	Spring–Extension	1
14	256–113	Bushing–Flange	2
15	85–8460	Asm–Switch Arm (Incl. Ref. #14 & 16)	1
16	302–60	Fitting–Grease	1
17	3–6498	Washer–Thrust	1
18	76–8640	Stud–Traction	1
19	322–8	Screw–HH	1
20	251–307	Bearing	2
21	85–9120	Spacer	1
22	75–5470	Spacer	1
23	3296–39	Nut–Lock	1

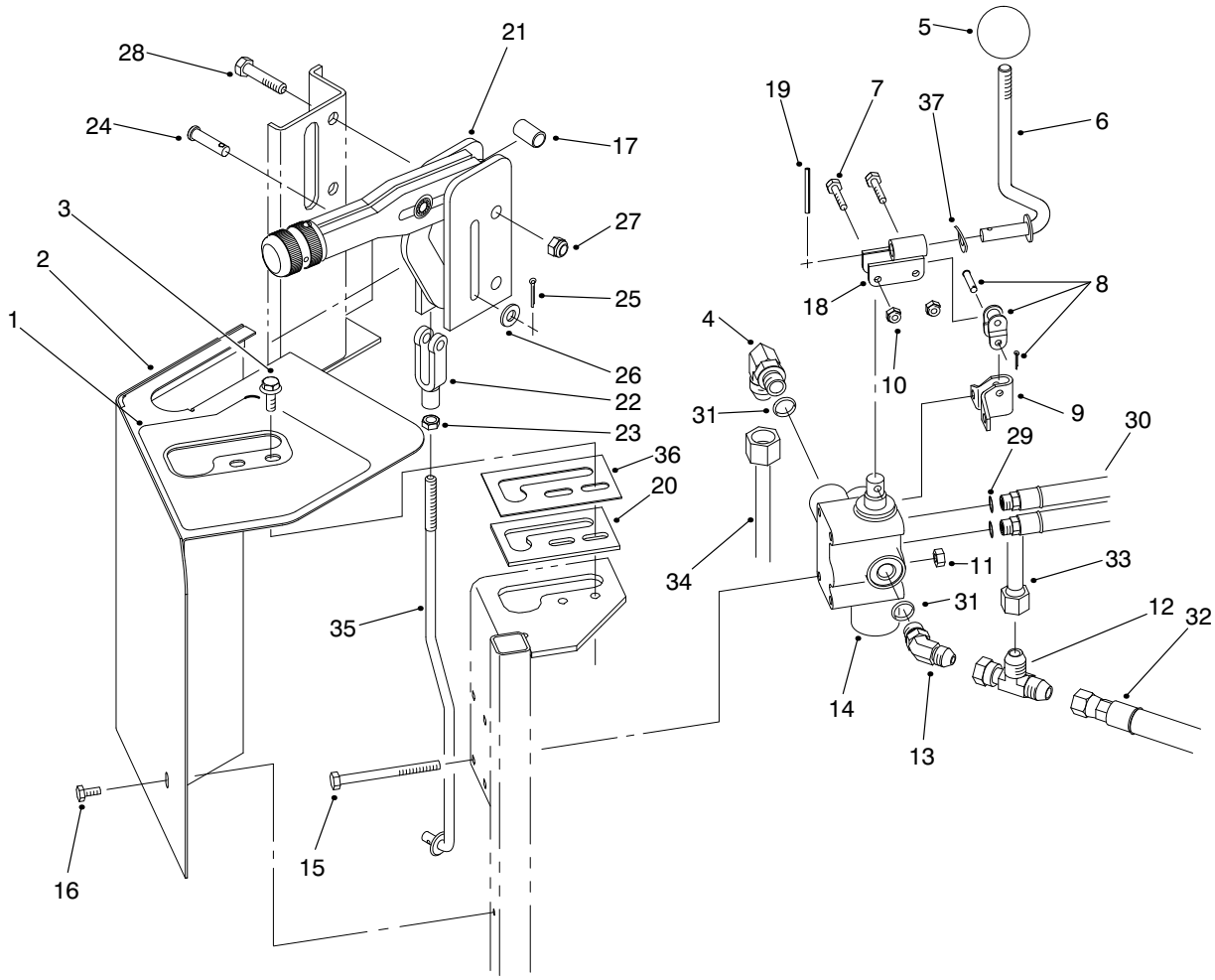

T–2595–4

LIFT VALVE INSTALLATION ASM

Ref. No.	Part No.	Description	No. Used
1	95–0647	Decal–Control Panel	1
2	95–0601	Shroud–Lift Valve	1
3	3234–4	Screw–HH	2
4	353–511	Fitting–Hydraulic 90° (Incl. Ref. #31)	1
5	233–21	Knob	1
6	92–8981	Lever–Lift	1
7	3290–360	Screw–HH	2
8	2710–20	Link–Offset	1
9	88–8480	Bracket–Pivot	1
10	3296–2	Nut–Lock	2
11	3296–42	Nut–Lock	4
12	353–877	Fitting– Swivel Run Tee	1
13	353–212	Fitting–Hydraulic 45° (Incl. Ref. #31)	1
14	43–1710	Asm–Valve	1
15	321–23	Screw–HH	4
16	32104–76	Screw–Self Tapping	1
17	85–0290	Spacer–Support, Seat	2
18	92–8983	Pivot	1

Ref. No.	Part No.	Description	No. Used
19	32121–73	Pin–Spring	1
20	21–8640	Latch–Lever, Valve	1
21	95–0636	Lever–Brake	1
22	282–2	Clevis	1
23	3220–2	Nut–Hex.	1
24	283–14	Pin–Clevis	1
25	3272–6	Pin–Cotter	1
26	3256–23	Washer–Flat	1
27	3296–29	Nut–Lock	2
28	322–8	Screw–HH	2
29	237–78	O–Ring	2
30	22–4670	Hose–Hydraulic (Incl. Ref. #29)	2
31	237–42	O–Ring	2
32	95–0592	Hose–Hydraulic	1
33	95–0575	Tube–Valve, Shuttle	1
34	95–0643	Tube–Hydraulic	1
35	95–0628	Rod–Brake	1
36	95–5833	Guide–Lever, Lift	1
37	3290–477	Washer–Wave	1

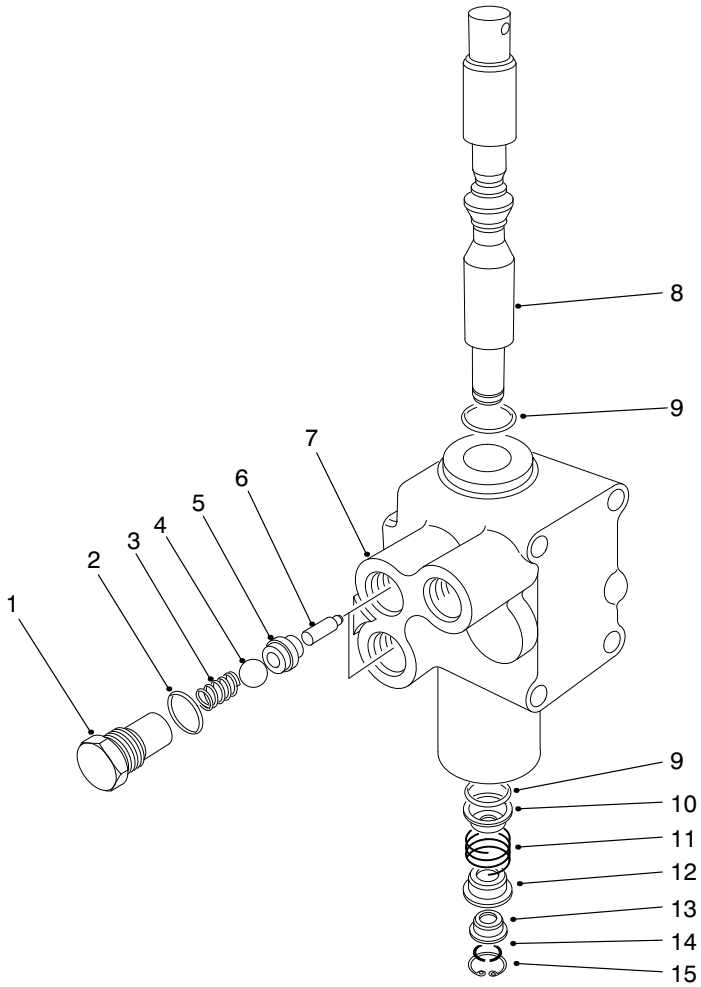

HYDRAULIC LIFT VALVE ASM NO. 43–1710

Ref. No.	Part No.	Description	No. Used
1	22–8330	Plug	2
2	237–42	O–Ring	2
3	22–8340	Spring	2
4	22–8350	Ball	2
5	22–8370	Seat–Check Valve	2
6	22–8360	Pin–Cam	2
†7		Body	1
8	22–8420	Spool	1

Ref. No.	Part No.	Description	No. Used
9	22–8500	O–Ring	2
10	22–8380	Retainer–Spring	2
11	22–8410	Spring	1
12	22–8390	Spring Retainer	1
13	22–8400	Spacer Float	1
14	22–8480	Ring–Spool Retaining	1
15	22–8490	Ring–Retaining	1

† Not Serviceable Separately

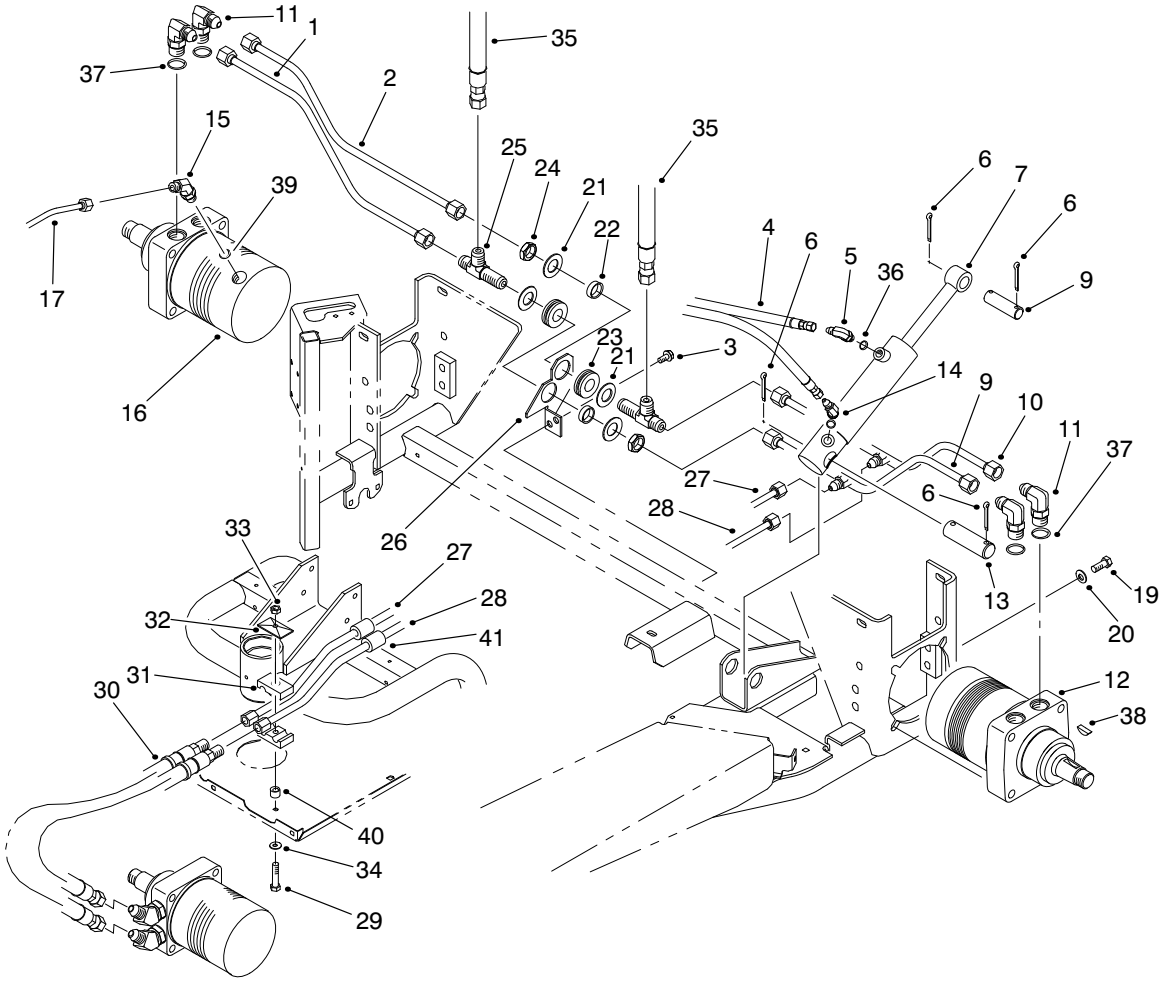

T–2600–3

REAR WHEEL DRIVE ASM

Ref. No.	Part No.	Description	No. Used
1	95–0564	Tube–Front, RH Rear Motor	1
2	95–0559	Tube–Rear,RH Rear Motor	1
3	32144–14	Screw–HWHTF	2
4	22–4670	Hose–Hydraulic	2
5	354–132	Fitting–Hydraulic 90° (Incl. Ref. #36)	1
6	3272–23	Pin–Cotter	4
7	83–7000	Cylinder–Hydraulic	1
8	18–7310	Pin–Cylinder, Rake	1
9	95–0560	Tube–Front, LH Rear Motor	1
10	95–0567	Tube–Rear, LH Rear Motor	1
11	353–426	Fitting–Hydraulic 90° (Incl. Ref. #37)	4
12	75–9831	Hydraulic Motor–Wheel	1
13	18–7160	Pin–Cylinder	1
14	353–431	Fitting–Hydraulic 45° (Incl. Ref. #36)	1
15	353–212	Fitting–Hydraulic 45° (Incl. Ref. #39)	1
16	75–9840	Hydraulic Motor–Wheel	1
17	95–0575	Tube–Shuttle Valve	1
19	325–5	Screw–HH	4

Ref. No.	Part No.	Description	No. Used
20	3256–26	Washer–Flat	4
21	69–8930	Washer	4
22	69–8960	Spacer	2
23	240–5	Grommet–Rubber	2
24	95–0642	Locknut–Bulkhead	2
25	95–0577	Fitting–Bulkhead, Tee	2
26	95–0568	Bracket–Bulkhead	1
27	95–0562	Tube–Front, Motor RH	1
28	95–0563	Tube–Front, Motor LH	1
29	321–18	Screw–HH	1
30	51–0600	Hose–Hydraulic	2
31	56–7976	Clamp–Tube	2
32	69–9760	Plate–Cover	1
33	3296–8	Nut–Lock	1
34	3256–78	Washer–Flat	1
35	95–0595	Hose–Hydraulic	2
36	237–78	O–Ring	2
38	3257–42	Key–Woodruff	2
37	237–79	O–Ring	4
39	237–42	O–Ring	1
40	52–2480	Spacer	1
41	38–3400	Snubber–Rubber	2

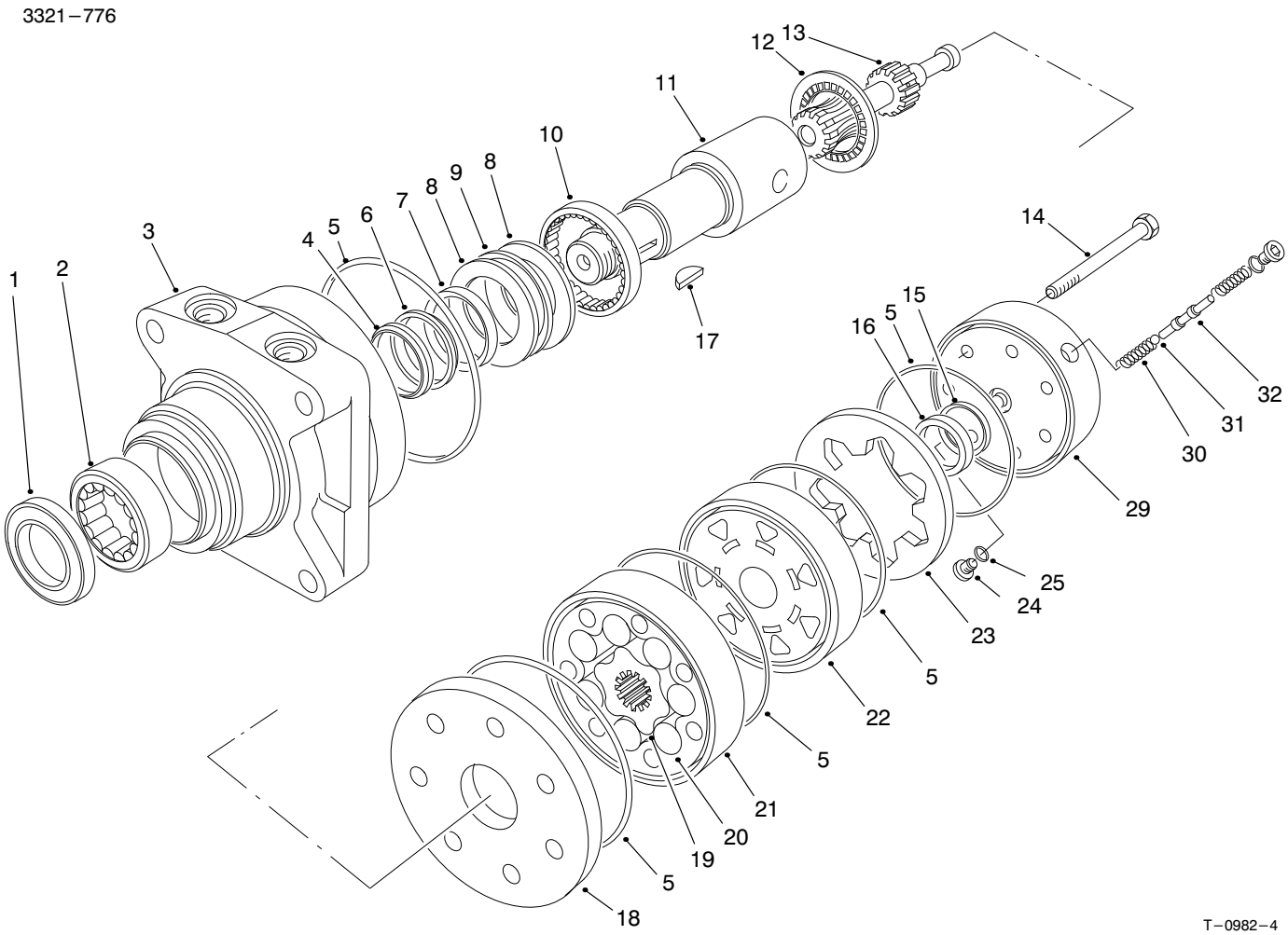

HYDRAULIC DRIVE MOTOR RIGHT REAR NO. 75−9840

Ref. No.	Part No.	Description	No. Used
1		Seal−Dirt & Water	1
2		Bearing	1
3		Housing	1
4		Washer−Backup	1
5		Seal−Rings	5
6		Washer−Backup	1
7		Seal−Inner	1
8		Washer−Thrust	2
9		Bearing−Thrust	1
10		Bearing	1
11	76−0860	Shaft−Coupling	1
12	76−0850	Bearing−Thrust	1
13	76−0820	Link−Drive	1
14	76−1040	Screw−HH	7
15		Seal−Commutator	1
16		Commutator	1
17	3257−42	Key−Woodruff	1
18	76−0870	Plate−Wear	1
19		Rotor	1
20		Vane	7

Ref. No.	Part No.	Description	No. Used
21		Stator	1
22	76−0840	Manifold	1
23		Ring−Commutator	1
24	353−990	Plug	
		(Incl. Ref. #25)	2
25	237−78	O−Ring	2
29	76−0890	Asm−Cover, End	
		(Incl. Ref. #24−25 &	
		30−32)	1
30		Spring	2
31		Ball	1
32		Valve−Shuttle	1
*	76−0830	Rotor Set	
		(Incl. Ref. #19−21)	1
*	76−0880	Asm−Commutator	
		(Incl. Ref. #15, 16 & 23)	1
*	94−8178	Kit−Seal	
		(Incl. Ref. #1, 4−7 & 15)	1
*	76−0810	Asm−Housing	
		(Incl. Ref. #2, 3 & 8−10)	1

* Not Illustrated

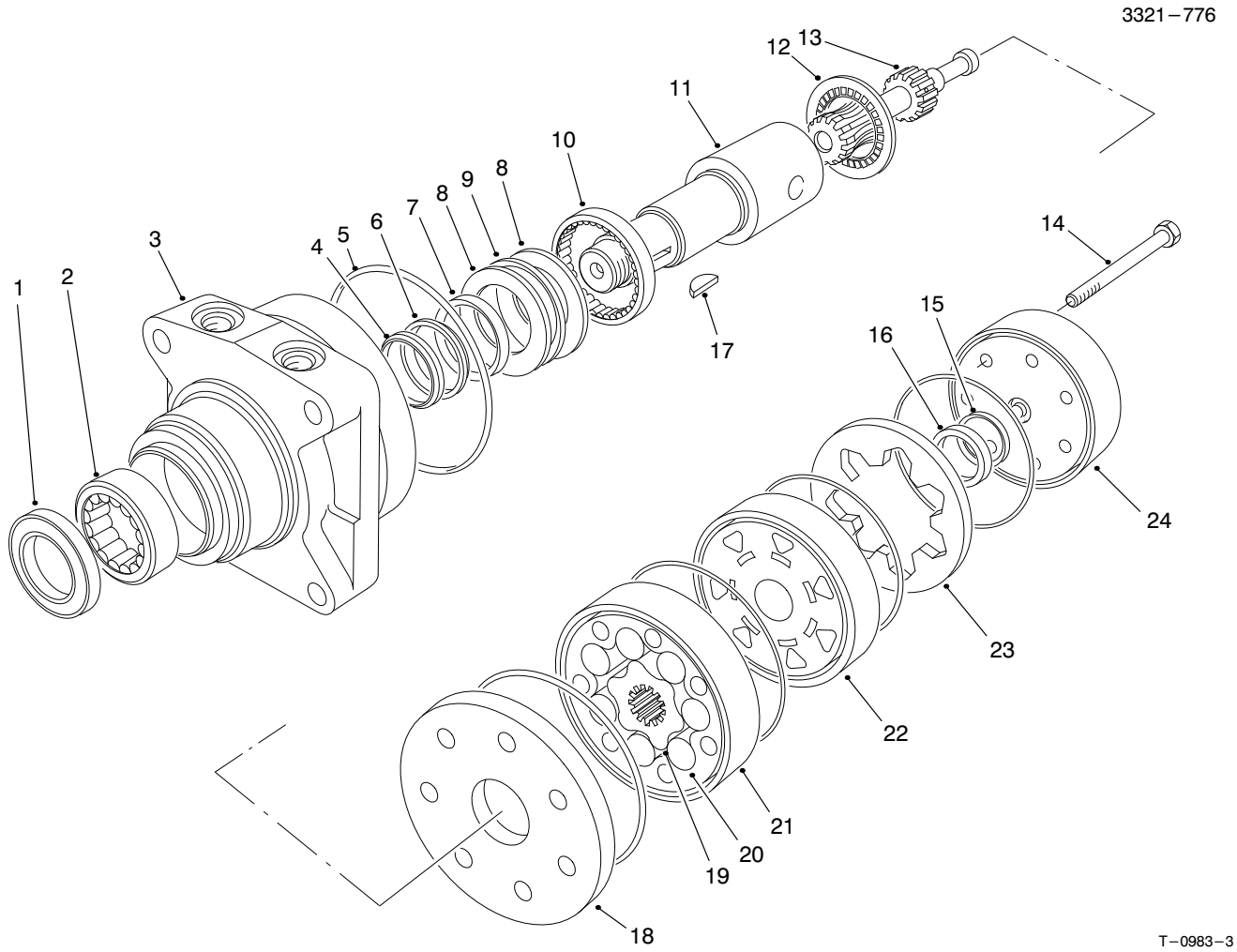

HYDRAULIC DRIVE MOTOR LEFT REAR NO. 75–9831

Ref. No.	Part No.	Description	No. Used
1		Seal–Dirt & Water	1
2		Bearing	1
3		Housing	1
4		Washer–Backup	1
5		Seal–Rings	5
6		Washer–Backup	1
7		Seal–Inner	1
8		Washer–Thrust	2
9		Bearing–Thrust	1
10		Bearing	1
11	76–0860	Shaft–Coupling	1
12	76–0850	Bearing–Thrust	1
13	76–0820	Link–Drive	7
14	76–1020	Screw–HH	1
15		Seal–Commutator	1
16		Commutator	1

Ref. No.	Part No.	Description	No. Used
17	3257–42	Key–Woodruff	1
18	76–0870	Plate–Wear	1
19		Rotor	1
20		Vane	7
21		Stator	1
22	76–0840	Manifold	1
23		Ring–Commutator	1
24	76–0940	Asm–Cover, End	1
*	76–0830	Rotor Set (Incl. Ref. #19–21)	1
*	76–0880	Asm–Commutator (Incl. Ref. #15, 16 & 23)	1
*	94–8178	Kit–Seal (Incl. Ref. #1, 4–7 & 15)	1
*	76–0810	Asm–Housing (Incl. Ref. #2, 3 & 8–10)	1

* Not Illustrated

3321−776

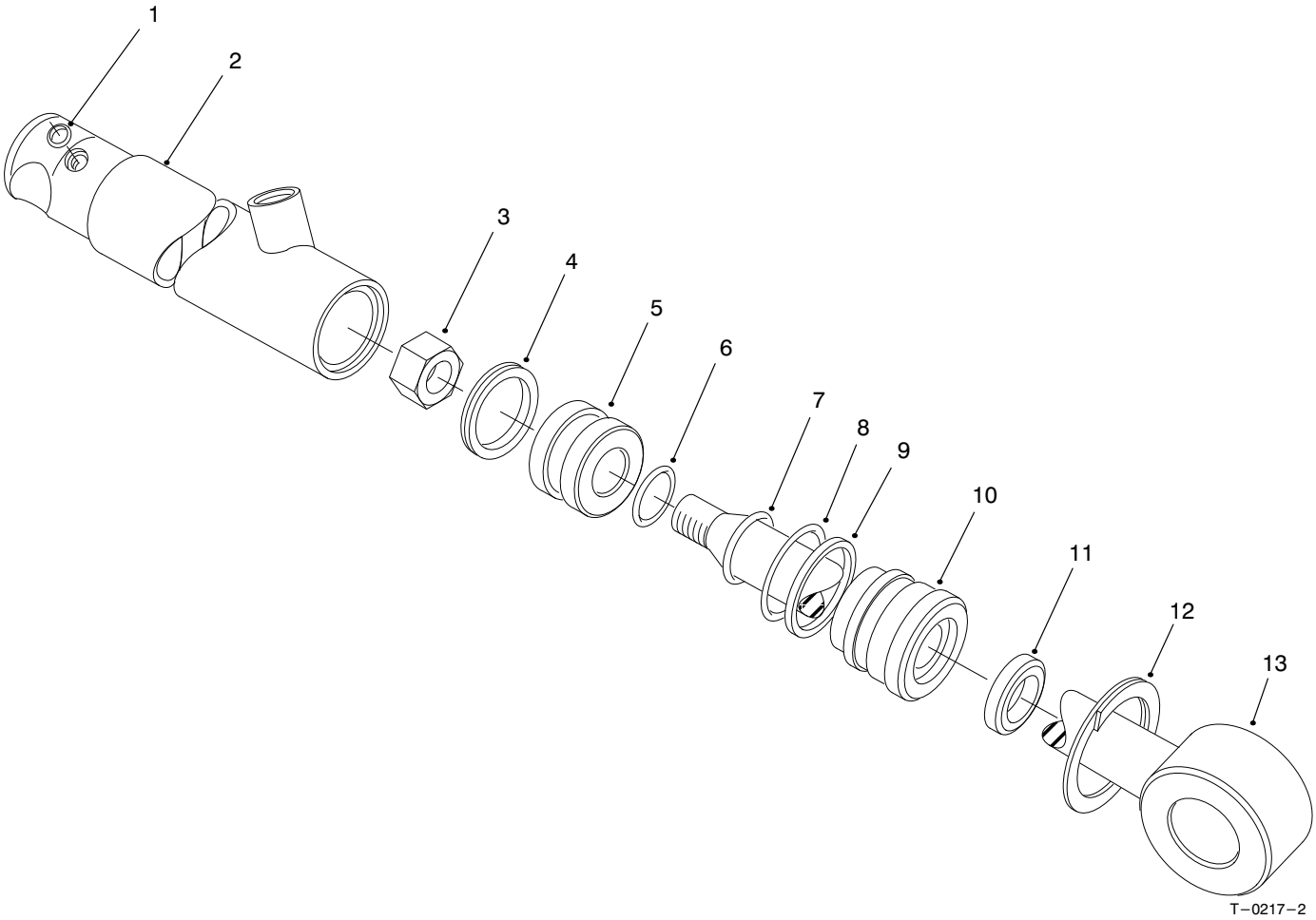

HYDRAULIC CYLINDER ASM NO. 83−7000

Ref. No.	Part No.	Description	No. Used
1	237−78	O−Ring	2
2	43−5260	Barrel−w/Clevis & Ports	1
3	32152−10	Nut	1
4		Uniring	1
5	70−2780	Piston	1
6		O−Ring	1
7		Poly−Pack	1
8		O−Ring	1

Ref. No.	Part No.	Description	No. Used
9		Back−Up	1
10	70−2770	Head	1
11		Seal−Dust	1
12	43−5220	Ring−Retaining	1
13	43−5230	Shaft with Clevis	1
*	83−7250	Kit−Seal Repair (Incl. Ref. #4, 6−9 & 11)	1

* Not Illustrated

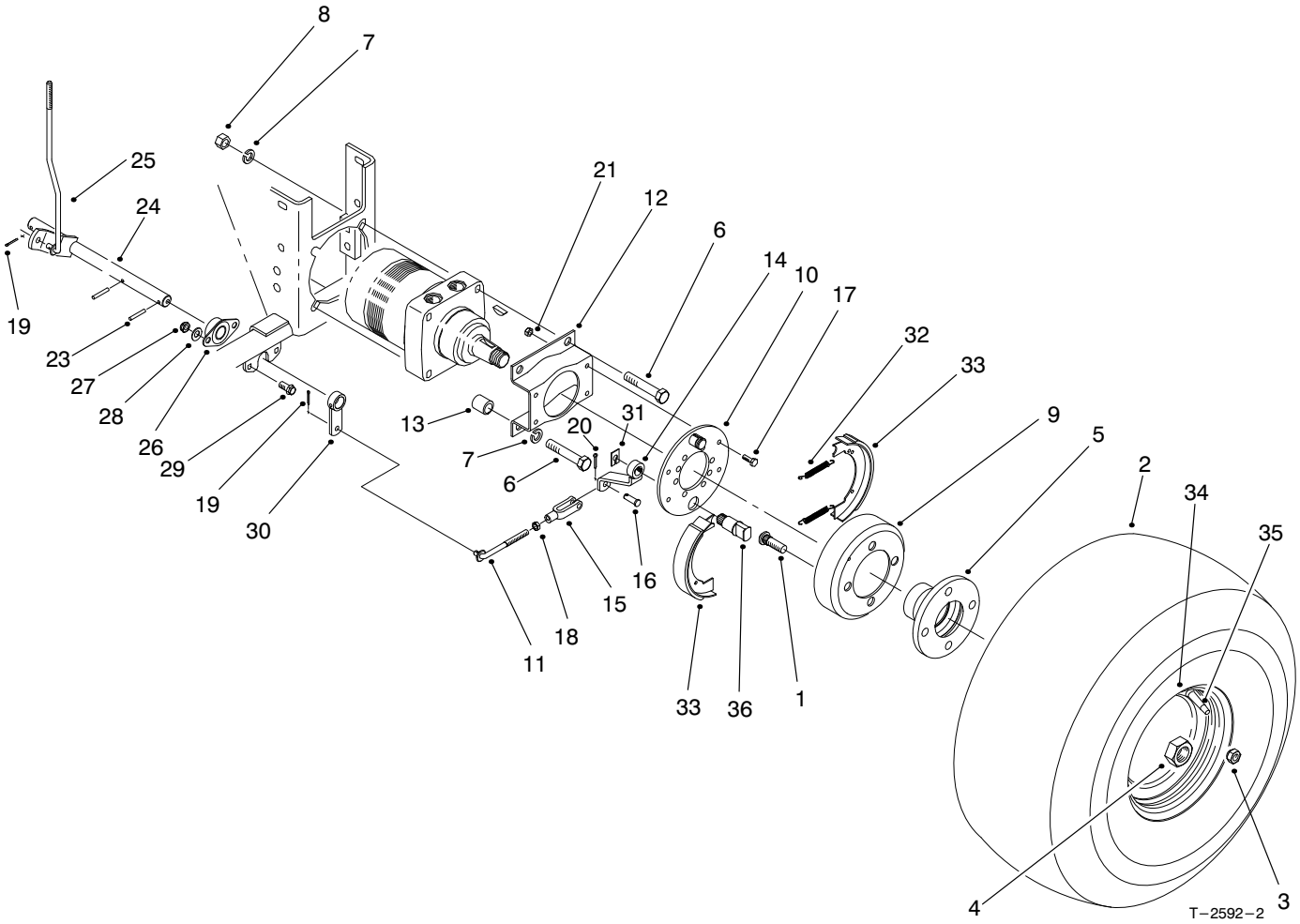

REAR WHEEL BRAKE ASM

Ref. No.	Part No.	Description	No. Used
1	85–6540	Stud–Drive Type	8
2	85–8290	Tire	2
3	242–50	Nut–Lug	8
4	26–3790	Nut–Lock	2
5	93–6838	Hub–Wheel	2
6	325–14	Screw–HH	8
7	3253–7	Washer–Lock	8
8	3217–9	Nut–Hex.	4
9	10–6850	Drum–Brake	2
10	70–9870	Plate–Backing	2
11	84–1990	Rod–Adjusting	2
12	84–2000	Bracket–Brake	2
13	92–1715	Spacer	8
14	93–6850	Lever–Brake	2
15	282–2	Clevis	2
16	283–1	Pin–Clevis	2
17	321–4	Screw–HH	8
18	3220–2	Nut–Jam	2
19	3272–6	Pin–Cotter	3

Ref. No.	Part No.	Description	No. Used
20	3272–10	Pin–Cotter	2
21	3296–42	Nut–Lock	8
23	32121–6	Pin–Roll	3
24	95–0625	Rod–Traverse	1
25	95–0628	Rod–Brake	1
26	27–2320	Bearing–Side Flange	2
27	3296–59	Nut–Lock	4
28	3256–24	Washer–Flat	4
29	3234–1	Screw–HHF	4
30	83–9310	Arm–Brake, RH	2
31	70–9850	Clip–Retaining	2
32	70–9880	Spring–Return	4
33	70–9840	Lining–Shoe	4
34	94–6116	Rim	2
35	232–35	Stem–Valve	2
36	70–9860	Shaft–Cam	2
*	71–1500	Asm–Brake (Incl. Ref. #10, 31–33 & 36)	2

* Not Illustrated

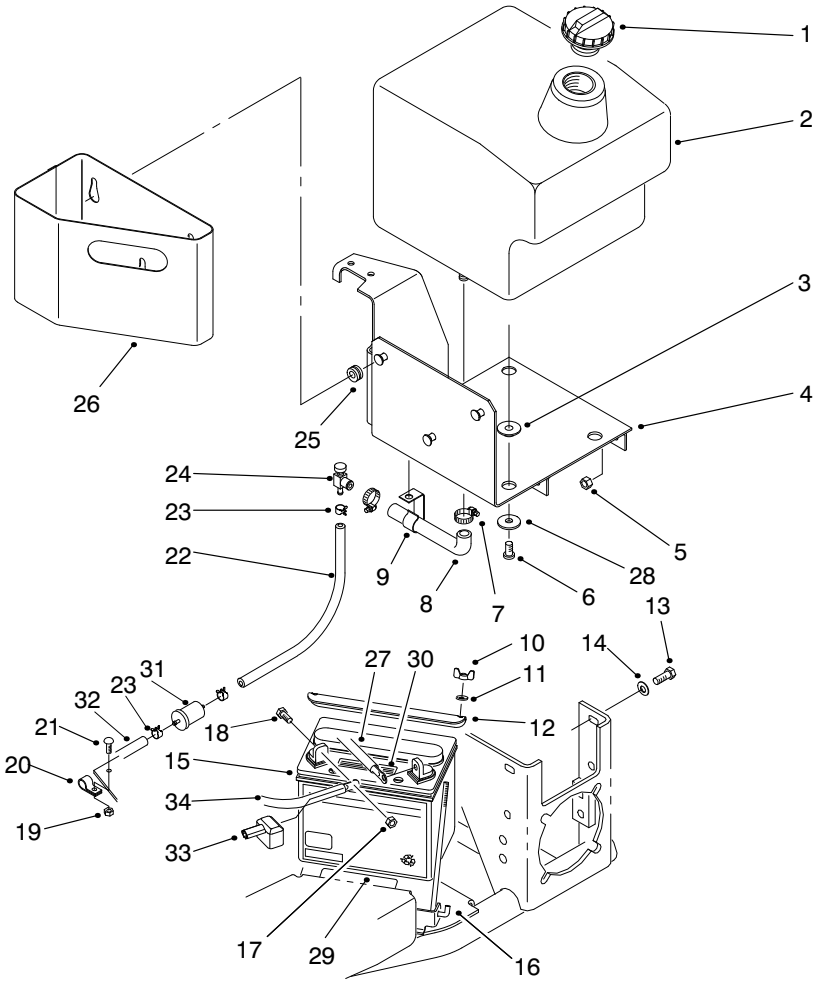

FUEL TANK ASM

Ref. No.	Part No.	Description	No. Used
1	93−7170	Cap−Fuel	1
2	92−7186	Tank−Fuel	1
3	240−11	Grommet	4
4	95−0576	Base−Fuel Tank	1
5	3296−39	Nut−Lock	3
6	3250−36	Screw−PPH	4
7	2412−36	Clamp−Hose	2
8	92−7152	Hose−Fuel	1
9	92−7160	Clip−Fuel Hose	1
10	32103−12	Nut−Wing	2
11	3256−22	Washer−Flat	2
12	92−5018	Clamp−Battery	1
13	323−6	Screw−HH	3
14	3256−24	Washer−Flat	3
15	92−1678	Battery	1
16	56−7720	Bolt−Battery	2
17	3296−29	Nut−Lock	2
18	322−3	Screw−HH	2

Ref. No.	Part No.	Description	No. Used
19	3296−42	Nut−Lock	1
20	2412−73	Clamp−R	1
21	3274−69	Screw−HSBH	1
22	95−0618	Hose−Fuel	1
23	2412−98	Clamp−Hose	4
24	83−1390	Fitting−Fuel Shut−Off	1
25	240−9	Grommet	3
26	86−7640	Box−Litter	1
27	86−7450	Wire−Battery−Ground	1
28	3256−4	Washer−Flat	4
29	93−6668	Decal−Battery	1
30	93−7276	Decal−Danger	1
31	94−2690	Filter−Fuel	1
32	95−0619	Hose−Gas Line	1
33	28−8080	Boot−Terminal	1
34	86−7570	Wire−Battery, Solenoid	1
*	95−0599	Asm−Wire (Incl. Ref. #33 & 34)	1

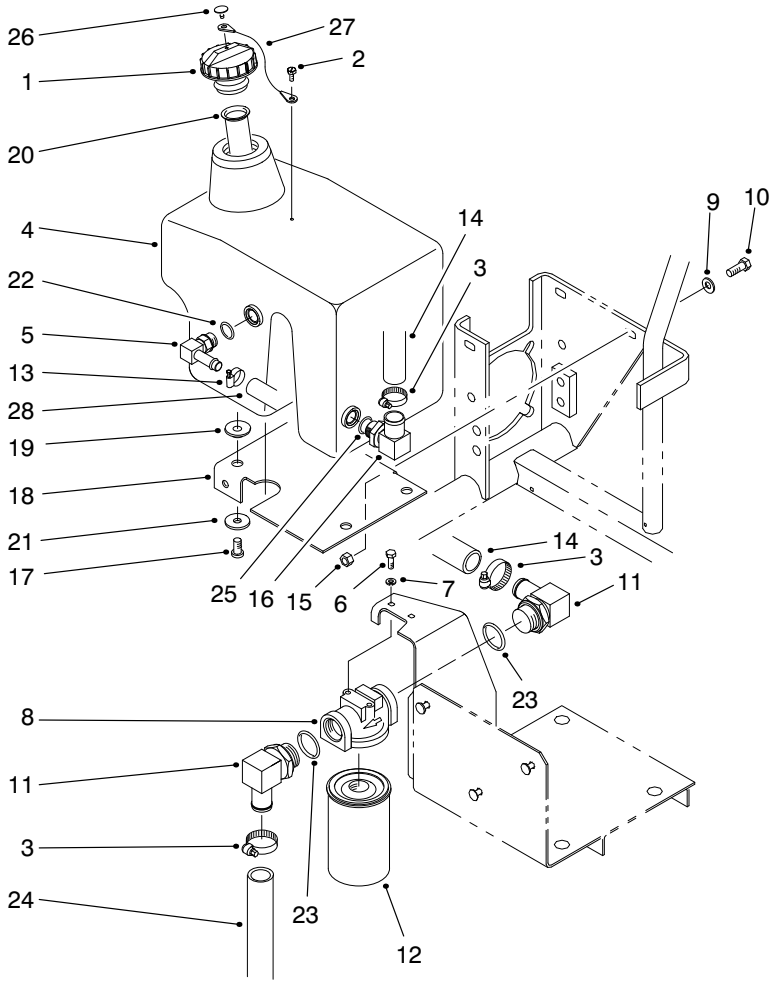

T–2591–3

HYDRAULIC OIL RESERVOIR & FILTER ASM

Ref. No.	Part No.	Description	No. Used
1	93–4365	Asm–Oil Cap (Incl. Ref. #26 & 27)	1
2	57–5420	Screw–Shoulder	1
3	2412–129	Clamp–Worm	4
4	98–0968	Tank–Hydraulic	1
5	354–120	Fitting–Hydraulic 45° (Incl. Ref. #22)	1
6	321–3	Screw–HH	2
7	3253–3	Washer–Lock	2
8	68–8990	Asm–Head, Filter	1
9	3256–24	Washer–Flat	3
10	323–6	Screw–HH	3
11	353–987	Fitting–Hydraulic 90° (Incl. Ref. #23)	2
12	23–9740	Filter–Oil	1
13	2412–36	Clamp	1

Ref. No.	Part No.	Description	No. Used
14	98–8152	Hose–Hydraulic	1
15	3296–39	Nut–Lock	3
16	95–0629	Fitting–Hydraulic 90° (Incl. Ref. #25)	1
17	3250–36	Screw–PPH	3
18	95–0590	Base–Hydraulic Tank	1
19	240–11	Grommet	4
20	92–1705	Screen–Filter	1
21	3256–4	Washer–Flat	3
22	237–79	O–Ring	1
23	237–81	O–Ring	2
24	95–0555	Hose–Hydraulic	1
25	237–117	O–Ring	1
26	2410–73	Retainer–Tether	1
27	75–0540	Tether–Oil Cap	1
28	98–8153	Hose–Return	1

3321–776

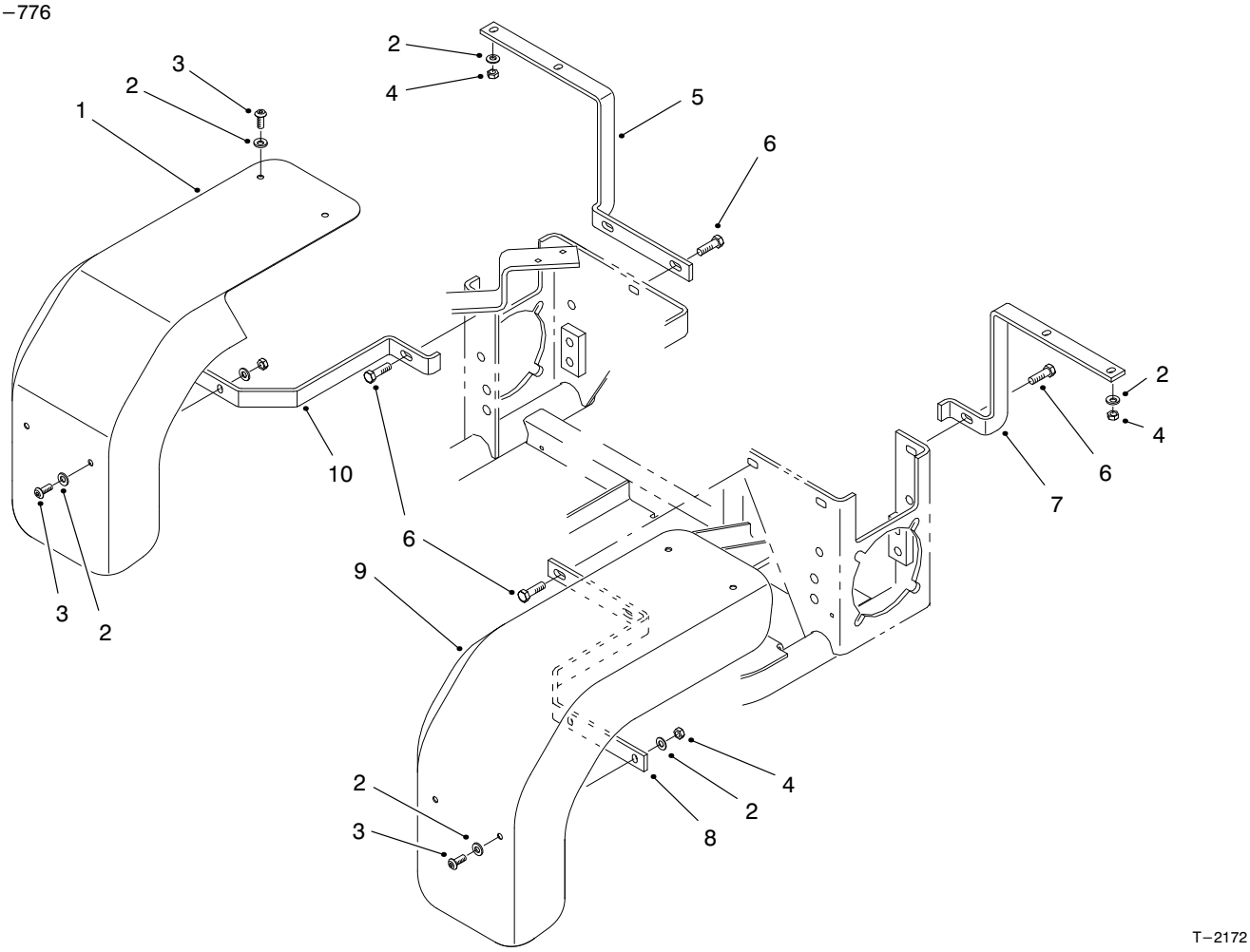

FENDER ASM–EUROPE

Ref. No.	Part No.	Description	No. Used
1	94–1884	Fender–Rear, RH	1
2	3256–70	Washer–Flat	16
3	3274–55	Screw–HSBH	8
4	3296–29	Nut–Lock	8
5	94–1888	Bracket–Support, Fender	1

Ref. No.	Part No.	Description	No. Used
6	323–7	Screw–HH	6
7	94–1886	Bracket–Support, Fender	1
8	94–1885	Bracket–Support, Fender	1
9	94–1883	Fender–Rear, LH	1
10	94–1887	Bracket–Support, Fender	1

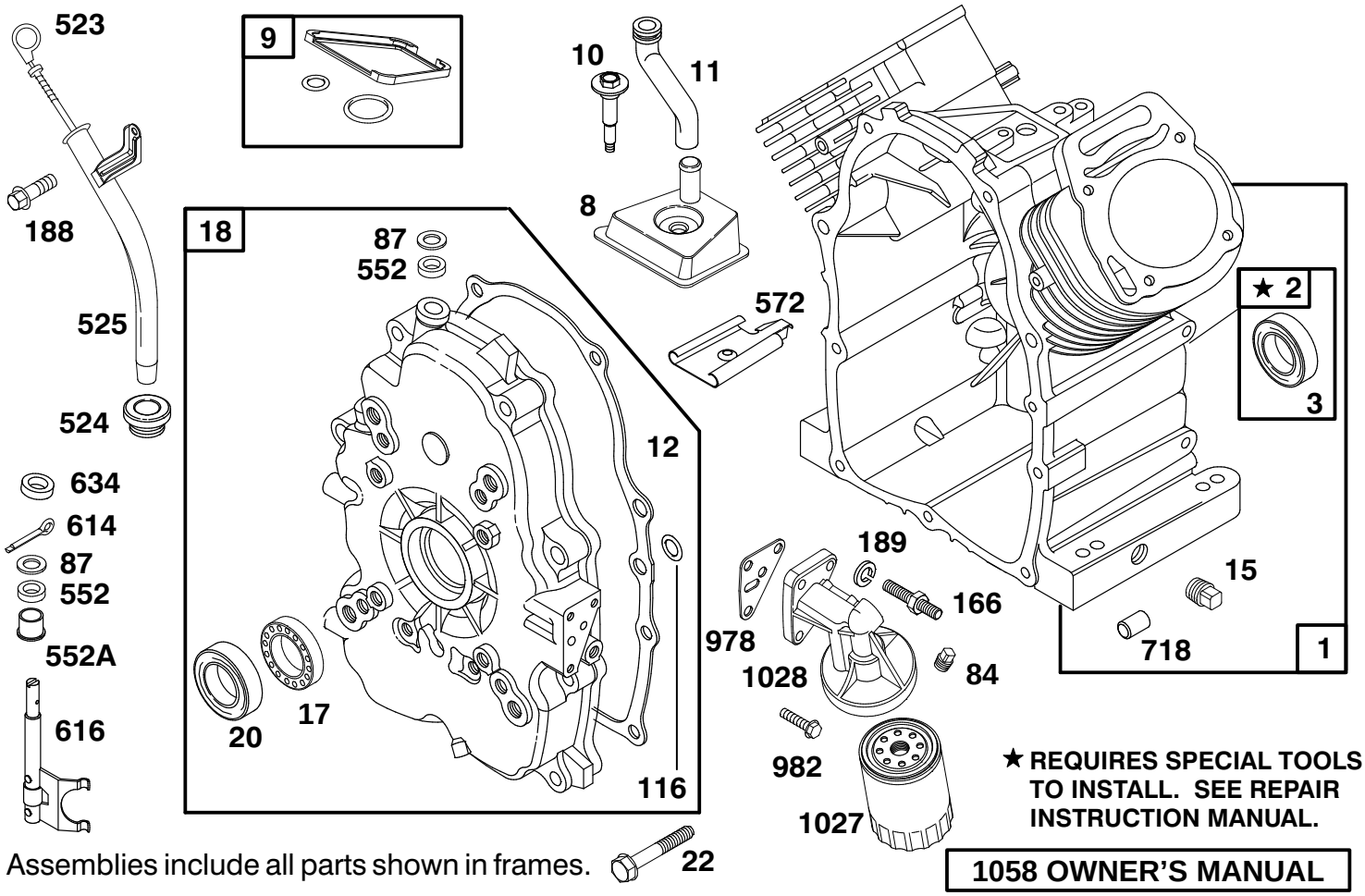

Assemblies include all parts shown in frames.

1058 OWNER'S MANUAL

ENGINE BRIGGS & STRATTON MODEL 303447 – 1180 – E1

Ref. No.	Part No.	Description	No. Used
1	808440	Cylinder Assembly	1
2	808534	Bearing – Cylinder	1
*3	805101	Seal – Oil	1
8	807795	Breather Assembly	1
*9	807688	Gasket – Breather	1
10	805751	Screw – Hex.Washer Head	1
11	806083	Tube – Breather	1
12	806190	Gasket – Crankcase Cover	1
15	805048	Plug – Oil Drain	1
17	805754	Bearing – Ball	1
18	808502	Cover – Crankcase	1
*20	805049	Seal – Oil	1
22	805696	Screw – Crankcase Cover	1
84	91488	Plug – Pipe	1
*87	805054	Seal – Governor Shaft	1
116	806191	O-Ring (Crankcase Cover)	1
166	805073	Stud – Oil Filter Adapter	1

Ref. No.	Part No.	Description	No. Used
188	805247	Screw – Hex.	1
189	805449	Lockwasher	1
523	808407	Dipstick	1
*524	808116	Seal – Fill Tube	1
525	808377	Tube – Oil Fill	1
552	805412	Bushing – Governor Shaft	1
552A	805413	Bushing – Governor Shaft	1
572	805197	Baffle – Breather	1
614	806096	Pin – Cotter	1
616	807596	Fork – Governor	1
634	805416	Washer – Governor Shaft	1
718	805103	Dowel – Crankcase	1
*978	805250	Gasket – Oil Filter Adapter	1
982	805030	Screw – Hex.	1
1027	492932	Filter – Oil	1
1028	808325	Adapter – Oil Filter	1
1058	273685	Owner's Manual	1

*Included in Gasket Set – Part No. 808390.

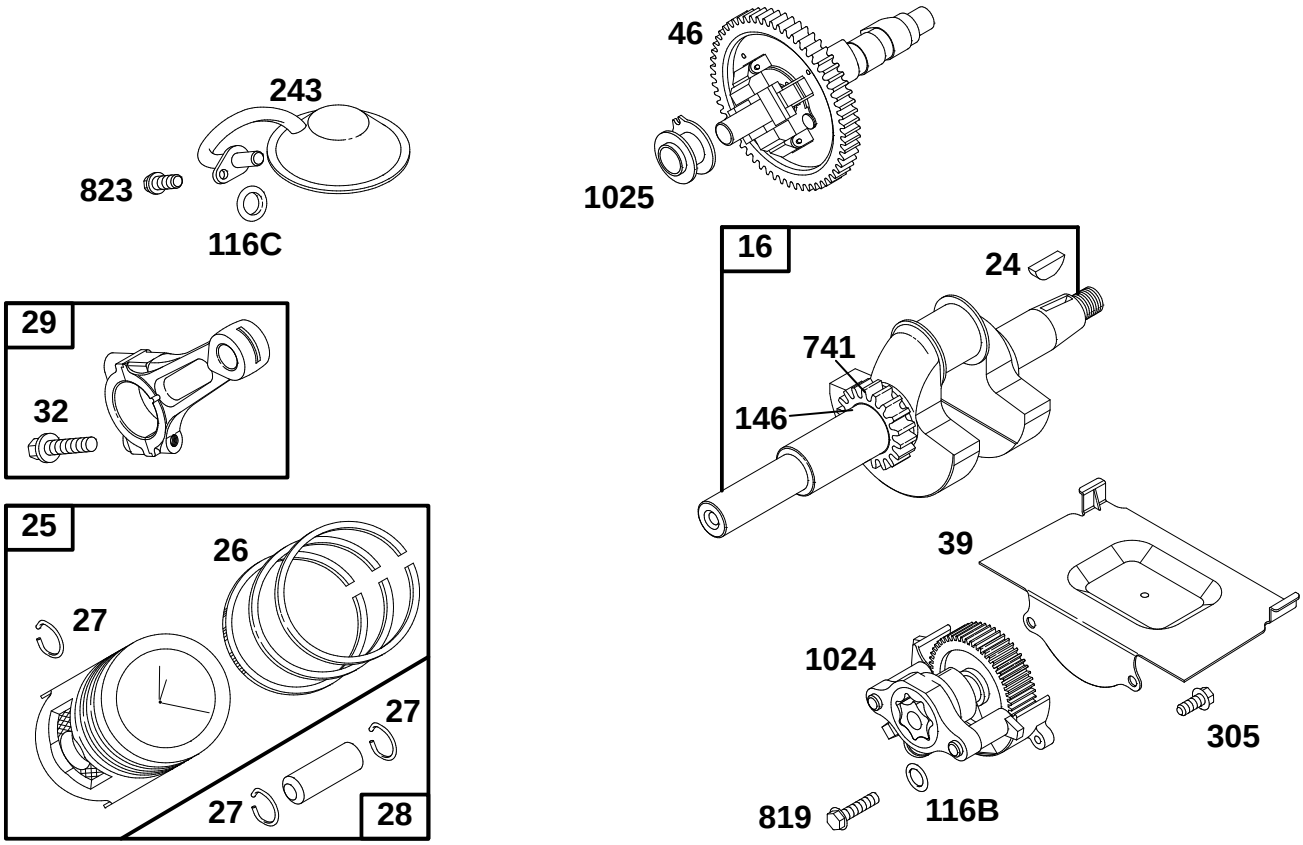

Assemblies include all parts shown in frames.

ENGINE BRIGGS & STRATTON MODEL 303447 – 1180 – E1

Ref. No.	Part No.	Description	No. Used
16	808425	Crankshaft	1
24	806066	Key – Flywheel	1
25	807619	Piston Assembly (Standard)	1
	807807	Piston Assembly (.010 O.S.)	1
	807809	Piston Assembly (.020 O.S.)	1
	807811	Piston Assembly (.030 O.S.)	1
26	807620	Ring Set – Piston (Standard)	1
	807808	Ring Set – Piston (.010 O.S.)	1
	807810	Ring Set – Piston (.020 O.S.)	1
	807812	Ring Set – Piston (.030 O.S.)	1
27	805099	Lock – Piston Pin	1
28	807621	Piston Pin Assembly	1
29	807900	Rod – Connecting (Standard)	1
	807809	Rod – Connecting (.020 U.S.)	1

Ref. No.	Part No.	Description	No. Used
32	805395	Screw – Connecting Rod	1
39	805654	Deflector – Oil	1
46	807542	Gear – Cam	1
*116B	805058	O–Ring (Oil Pump)	1
*116C	805316	O–Ring (Pick – Up Tube)	1
146	94196	Key – Timing	1
243	807598	Screen – Oil Pump	1
305	805406	Screw – Hex.	1
741	805984	Gear – Timing	1
819	805057	Screw – Hex.	1
823	805317	Screw – Hex.	1
1024	807644	Oil Pump Assembly	1
1025	805313	Slider – Governor	1

*Included in Gasket Set – Part No. 808704.

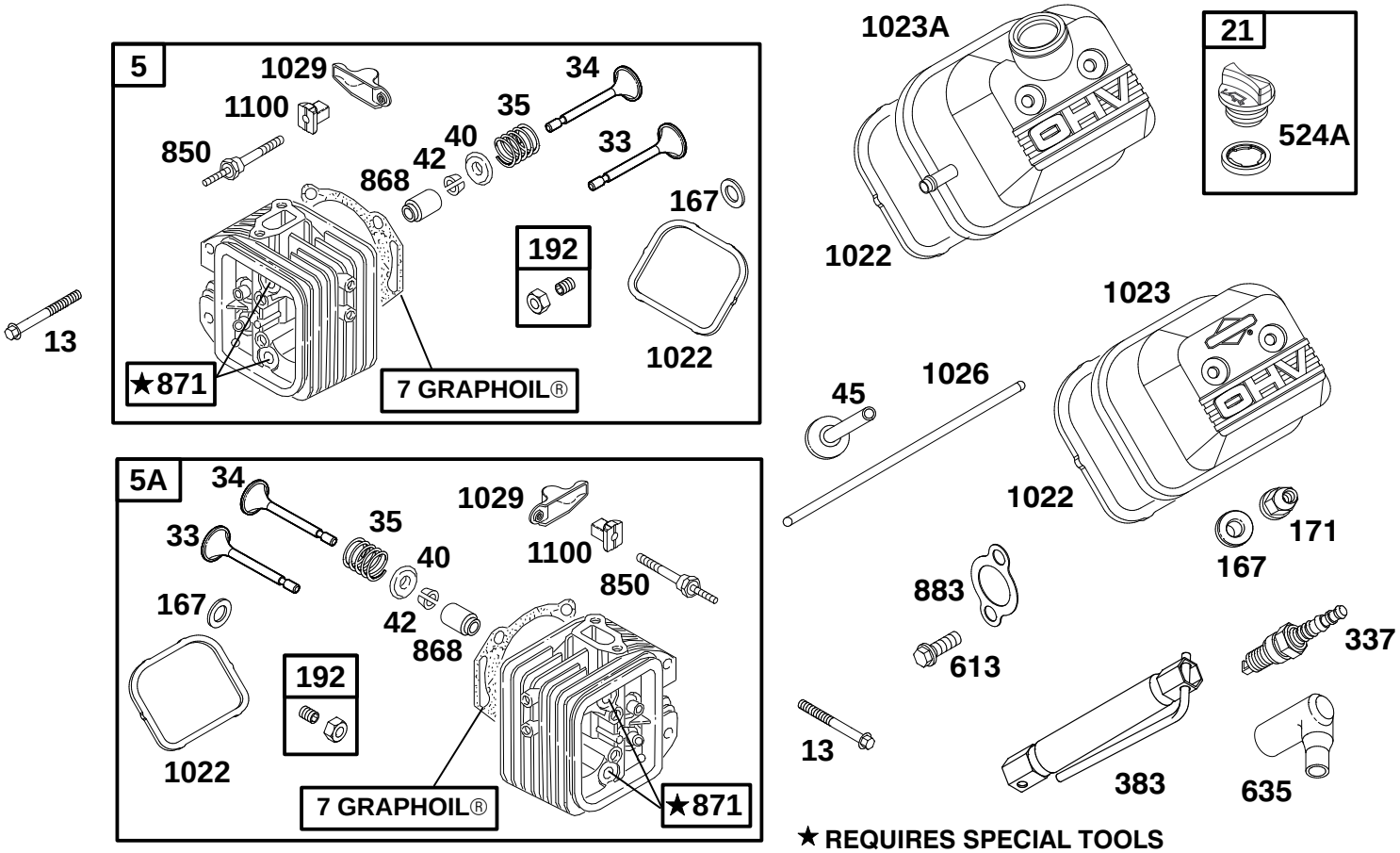

★ REQUIRES SPECIAL TOOLS TO INSTALL. SEE REPAIR INSTRUCTION MANUAL.

Assemblies include all parts shown in frames.

ENGINE BRIGGS & STRATTON MODEL 303447 – 1180 – E1

Ref. No.	Part No.	Description	No. Used
5	808381	Head – Cylinder (Cyl. #1)	1
5A	808382	Head – Cylinder (Cyl. #2)	1
*‡7	806085	Gasket – Cylinder Head	1
13	805097	Screw – Cylinder Head	1
21	491832	Dipstick/Fill Plug	1
33	807681	Valve – Exhaust	1
34	807680	Valve – Intake	1
35	805937	Spring – Valve	1
40	805092	Retainer – Valve Spring	1
42	807683	Retainer – Valve	1
45	262679	Tappet – Valve	1
*‡167	805420	Washer – Valve Cover	1
‡171	805019	Nut – Nylock	1
192	807623	Screw – Valve Adjustment	1
337	496018	Plug – Spark	1
383	19374	Wrench – Spark Plug	1

Ref. No.	Part No.	Description	No. Used
*‡524A	271983	Seal – Filler Plug	1
613	805158	Screw – Hex.	1
635	805529	Elbow – Spark Plug	1
850	806037	Stud – Rocker Arm	1
868	805094	Seal – Valve Guide	1
871	805084	Guide – Valve	1
*‡883	805024	Gasket – Exhaust	1
*‡1022	806039	Gasket – Valve Cover	1
1023	805100	Cover – Valve	1
1023A	808032	Cover – Valve	1
1026	805352	Rod – Push (Intake Valve)	
		Note: 805617 Rod – Push (Exhaust Valve)	1
1029	806036	Arm – Rocker	1
1100	806038	Pivot – Rocker Arm	1

*Included in Gasket Set – Part No. 808704.
‡Included in Valve Overhaul Kit – Part No. 808392.

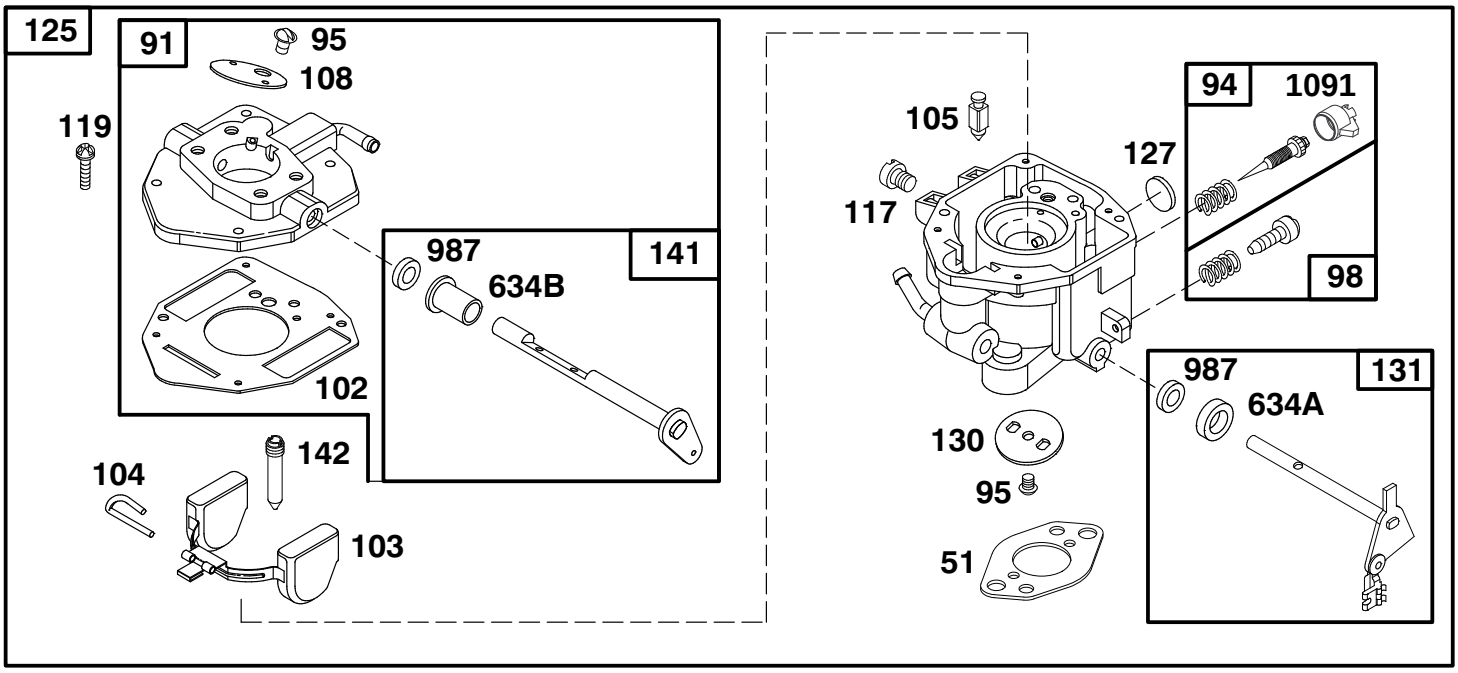

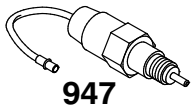

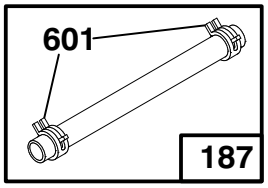

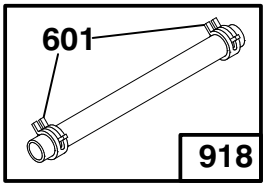

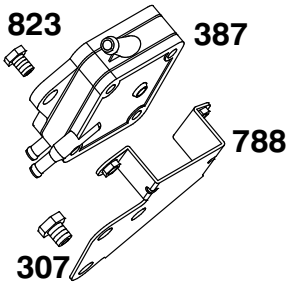

Assemblies include all parts shown in frames.

ENGINE BRIGGS & STRATTON MODEL 303447–1180–E1

Ref. No.	Part No.	Description	No. Used
*51	805700	Gasket – Carburetor Mtg.	1
91	807919	Body – Upper Carburetor	1
†94	808257	Valve – Idle Adjust	1
95	805538	Screw – Valve Mtg.	1
98	808177	Screw – Throttle Adj.	1
†102	805541	Gasket – Carburetor Body	1
103	805546	Float Assembly	1
†104	805545	Pin – Float Hinge	1
†105	805547	Valve – Fuel Inlet	1
108	805539	Valve – Choke	1
117	805852	Jet – Main	1
	805537	Jet – Main (High Altitude)	1
119	805540	Screw – Upper Body Mtg.	1
125	808251	Carburetor Assembly	1
†127	805559	Plug – Welch	1
130	805554	Valve – Throttle	1
131	807720	Shaft – Throttle	1

Ref. No.	Part No.	Description	No. Used
141	807722	Shaft – Choke	1
†142	805553	Nozzle – Carburetor	1
187	296004	Line – Fuel	
		(Cut to Required Length)	1
307	805025	Screw – Hex.	1
387	491922	Pump – Fuel	1
601	93053	Clamp – Hose	1
†634A	805557	Collar – Throttle	1
†634B	805543	Collar – Choke	1
788	807685	Bracket – Fuel Pump	1
823	805317	Screw – Mounting	1
918	393815	Line – Vacuum	
		(Cut to Required Length)	1
947	807664	Solenoid	1
†987	805544	Seal – Shaft	1
†1091	805862	Cap – Limiter	1

*Included in Gasket Set – Part No. 808704.

†Included in Carburetor Kit – Part No. 808273.

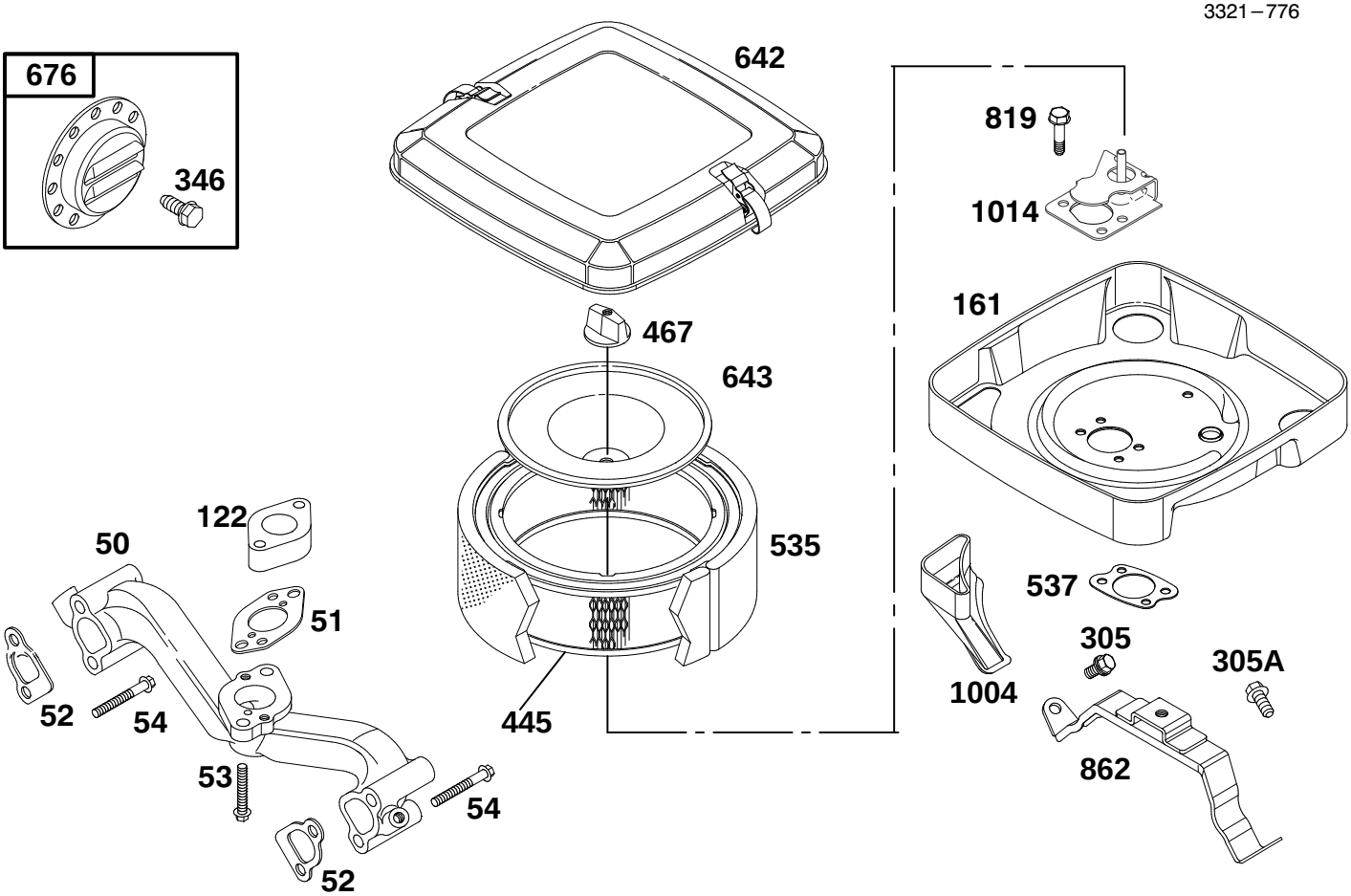

ENGINE BRIGGS & STRATTON MODEL 303447 – 1180 – E1

Ref. No.	Part No.	Description	No. Used
50	805772	Manifold – Intake	1
*51	805700	Gasket – Carburetor Mtg.	1
*‡52	805023	Gasket – Intake Manifold	1
53	805466	Screw – Hex.	1
54	805006	Screw – Hex.	1
122	805328	Spacer – Carburetor	1
161	807857	Base – Air Cleaner	1
305	805406	Screw – Hex. (M6 x 12 mm)	1
305A	805902	Screw – Hex. (M6 x 16 mm)	1
346	94896	Screw – Hex.	1

Ref. No.	Part No.	Description	No. Used
445	394018	Filter – Air	1
467	491875	Knob – Air Cleaner	1
535	272490	Filter – Air	1
*537	805655	Gasket – Air Cleaner	1
642	807862	Cover – Air Cleaner	1
643	805631	Plate – Air Cleaner	1
676	397630	Deflector – Muffler	1
819	805317	Screw – Hex.	1
862	807796	Bracket – Air Cleaner	1
1004	805632	Strap – Cleaner Mounting	1
1014	808311	Shield – Carburetor	1

*Included in Gasket Set – Part No. 808704.
‡Included in Valve Overhaul Kit – Part No. 808392.

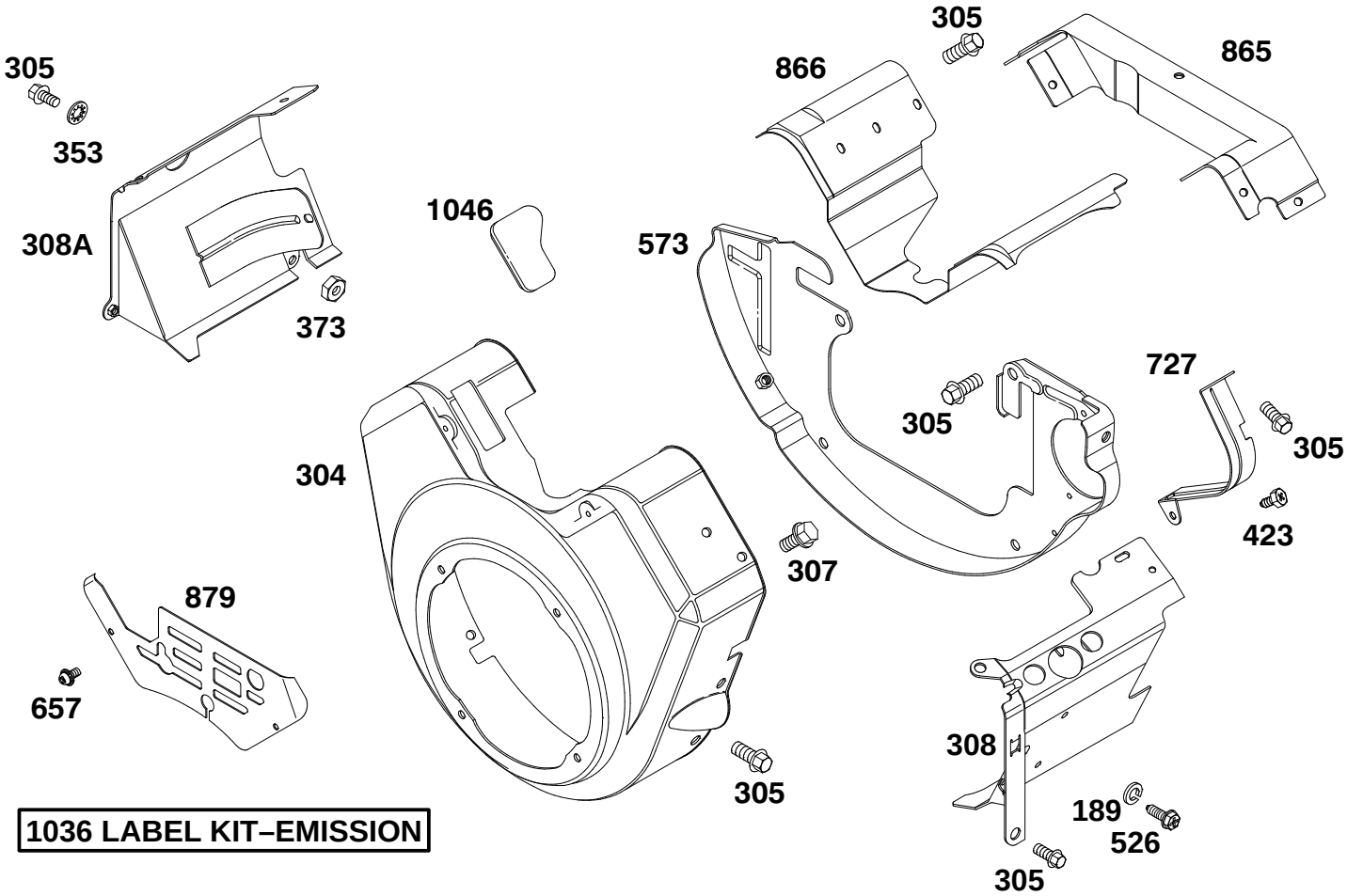

ENGINE BRIGGS & STRATTON MODEL 303447–1180–E1

Ref. No.	Part No.	Description	No. Used
189	805449	Washer – Lock	1
304	807898	Housing – Blower	1
305	805406	Screw – Hex.	1
307	805025	Screw – Hex.	1
308	808310	Cover – Air Guide (Cyl. #1)	1
308A	808100	Cover – Air Guide (Cyl. #2)	1
353	806101	Washer – Lock	1
373	805383	Nut – Hex.	1

Ref. No.	Part No.	Description	No. Used
423	805260	Screw – Phillips Hex.	1
526	805448	Screw – Phillips Hex.	1
573	807663	Back Plate Assembly	1
657	805009	Screw – Phillips	1
727	805505	Shield – Starter	1
865	807661	Cover – Air Guide	1
866	805738	Valley Cover – Air Guide	1
879	805841	Cover – Carburetor	1
1036	499366	Label Kit – Emission	1
1046	805753	Plug – Blower Housing	1

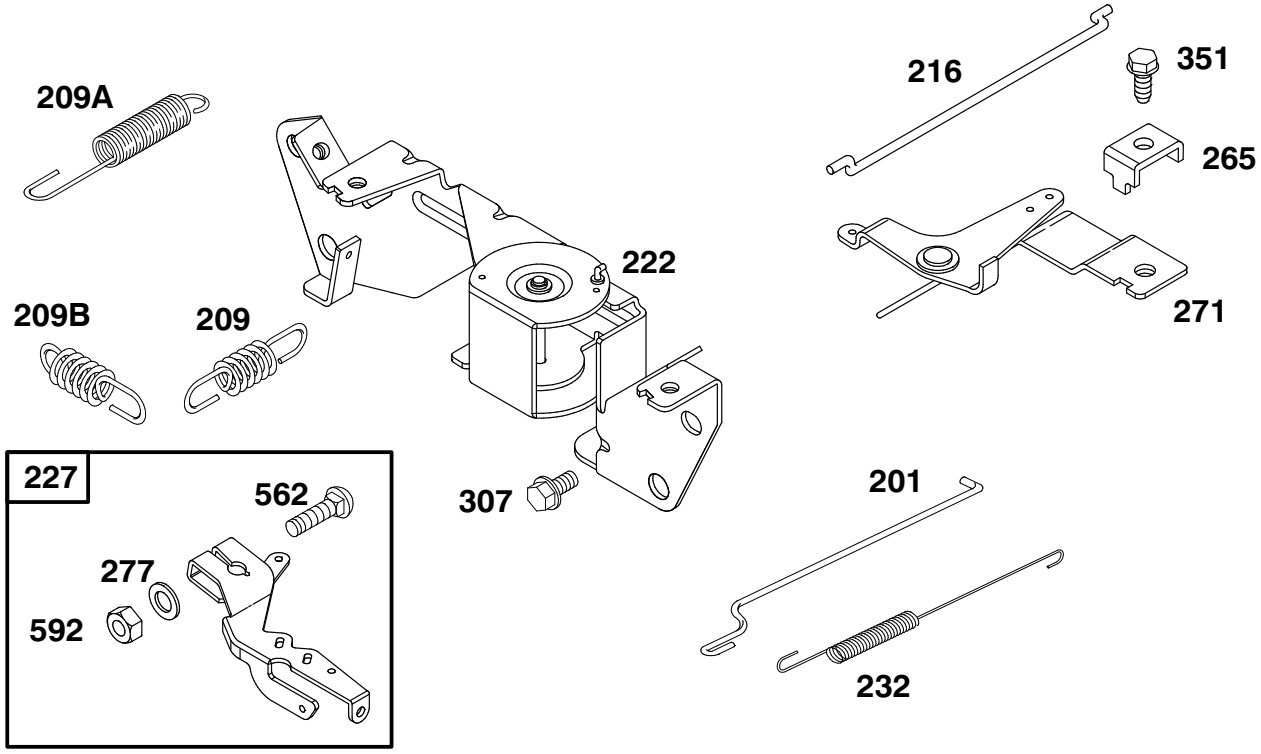

Assemblies include all parts shown in frames.

ENGINE BRIGGS & STRATTON MODEL 303447 – 1180 – E1

Ref. No.	Part No.	Description	No. Used
201	805480	Link – Governor	1
209	805463	Spring – Governor	1
209A	805450	Spring – Governed Idle	1
209B	805453	Spring – Governor	1
216	805439	Link – Choke	1
222	808195	Bracket – Governor Control	1
227	807528	Lever Assembly – Governor	1
232	805465	Spring – Governor Link	1

Ref. No.	Part No.	Description	No. Used
265	221535	Clamp – Casing	1
271	808145	Bracket – Choke Control	1
277	805018	Washer	1
307	805025	Screw – Hex.	1
351	805169	Screw – Hex.	1
562	805381	Bolt – Carriage	1
592	805383	Nut – Hex.	1

3321–776

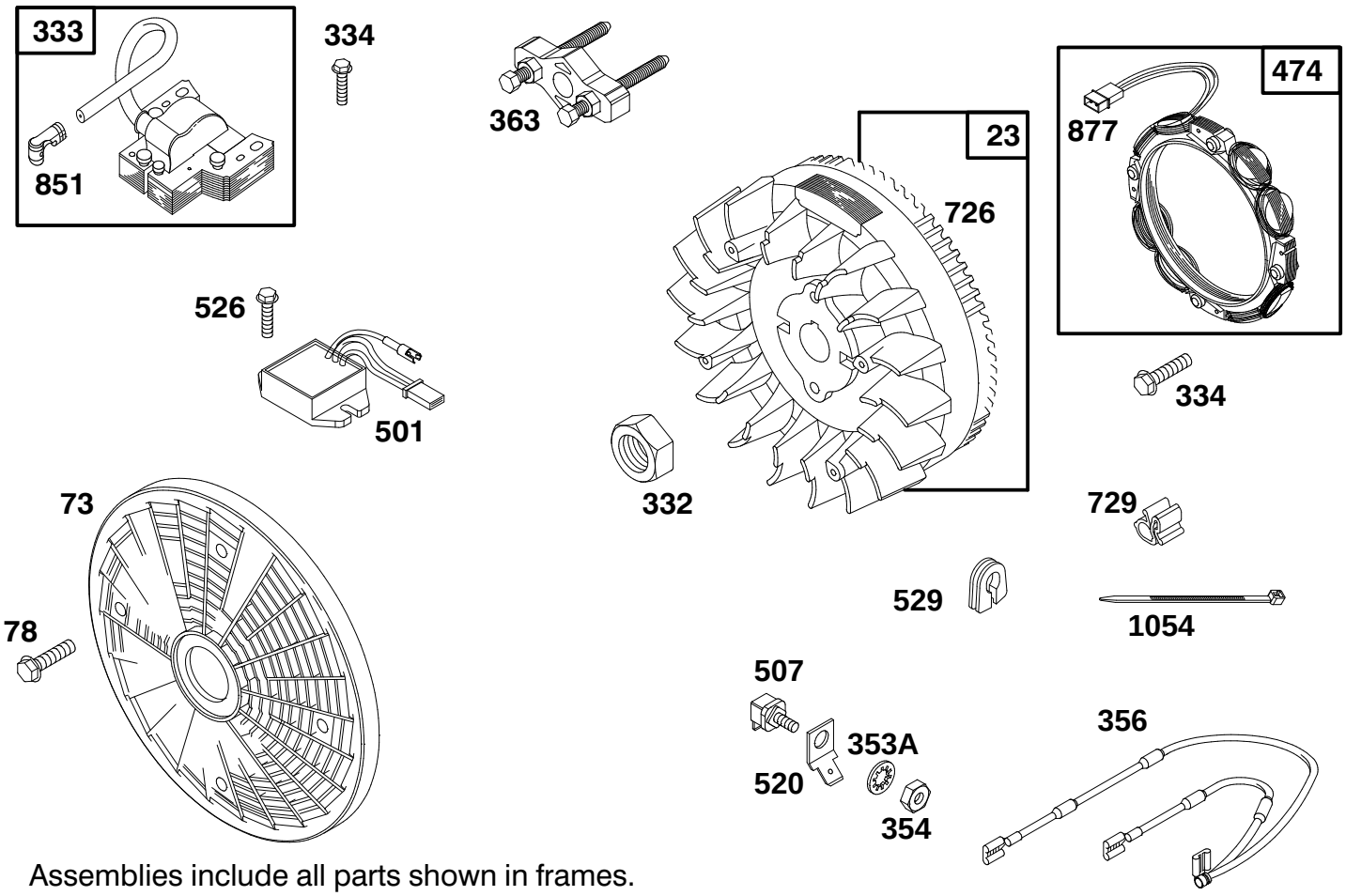

Assemblies include all parts shown in frames.

ENGINE BRIGGS & STRATTON MODEL 303447–1180–E1

Ref. No.	Part No.	Description	No. Used
23	808128	Flywheel – Magneto	1
73	494439	Screen – Rotating	1
78	805447	Screw – Hex.	1
332	806028	Nut – Hex.	1
333	492341	Armature – Magneto	1
334	805407	Screw – Hex.	1
353A	92791	Washer – Lock (Internal Tooth)	1
354	90576	Nut – Hex.	1
356	493792	Wire – Stop	1
363	19203	Puller – Flywheel	1
474	393295	Stator – Alternator	1

Ref. No.	Part No.	Description	No. Used
501	394890	Regulator – Alternator	1
507	398525	Insulator	1
520	93722	Terminal – Spade	1
526	805448	Screw – Hex.	1
529	805641	Grommet	1
726	808162	Gear – Flywheel Ring Includes Mounting Hardware.	1
729	280470	Clip – Wire	1
851	493880	Terminal – Ignition Cable	1
877	393537	Wire – Alternator	1
1054	280275	Tie – Cable	1

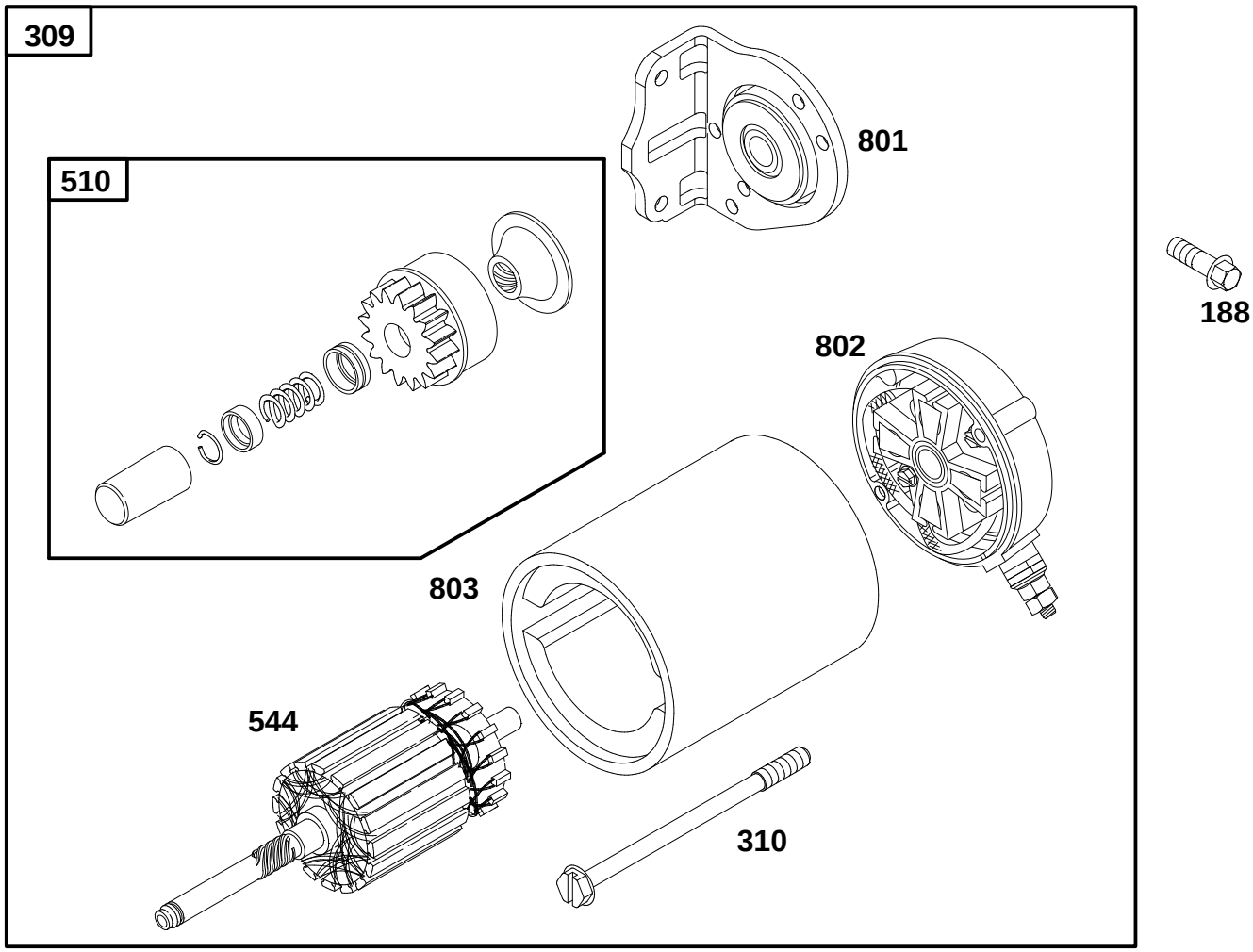

ENGINE BRIGGS & STRATTON MODEL 303447 – 1180 – E1

Ref. No.	Part No.	Description	No. Used
188	805247	Screw – Hex.	1
309	808106	Motor – Starter	1
310	496880	Bolt – Thru	1
510	496881	Drive – Starter	1
544	496816	Armature – Starter	1

Ref. No.	Part No.	Description	No. Used
801	496814	Cap – Drive	1
802	496813	Cap – End	
		Note: Includes 496887	
		Brush Set	1
803	496815	Housing – Starter	1

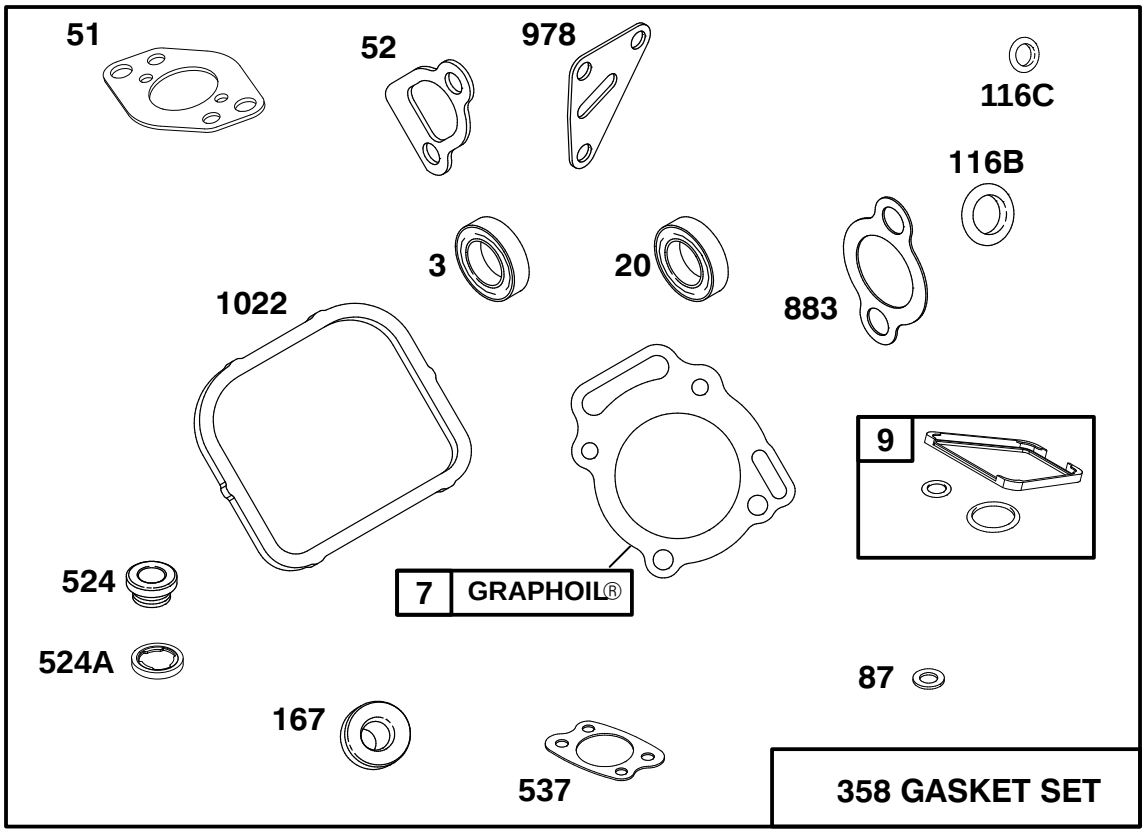

Assemblies include all parts shown in frames.

ENGINE BRIGGS & STRATTON MODEL 303447−1180−E1

Ref. No.	Part No.	Description	No. Used
*3	805101	Seal − Oil	1
*‡7	806085	Gasket − Cylinder Head	1
*9	807688	Gasket − Breather	1
*20	805049	Seal − Oil	1
*51	805700	Gasket − Carburetor Mtg.	1
*‡52	805023	Gasket − Intake Manifold	1
*87	805054	Seal − Governor Shaft	1
*116B	805058	O−Ring (Oil Pump)	1
*116C	805316	O−Ring (Pick − Up Tube)	1

Ref. No.	Part No.	Description	No. Used
*‡167	805420	Washer − Valve Cover	1
358	808390	Gasket Set	1
*524	281370	Seal − Fill Tube	1
*‡524A	271983	Seal − Filler Plug	1
*537	805655	Gasket − Air Cleaner	1
*‡883	805024	Gasket − Exhaust	1
*978	805250	Gasket − Oil Filter Adapter	1
*‡1022	806039	Gasket − Valve Cover	1

*Included in Gasket Set − Part No. 808704.
‡Included in Valve Overhaul Kit − Part No 808392.

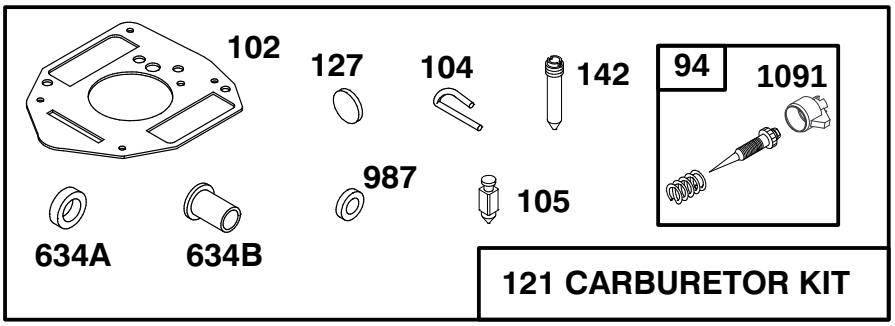

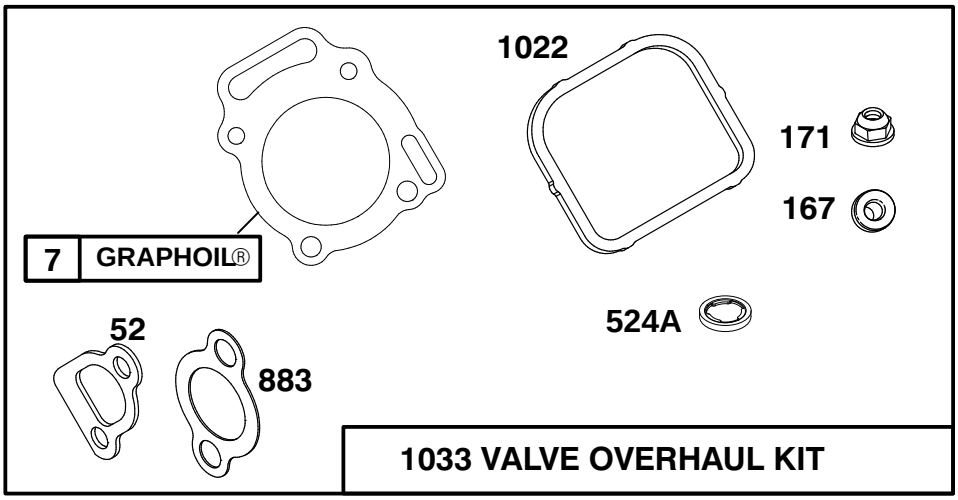

Assemblies include all parts shown in frames.

ENGINE BRIGGS & STRATTON MODEL 303447 – 1180 – E1

Ref. No.	Part No.	Description	No. Used
*‡7	806085	Gasket – Cylinder Head	1
*‡52	805023	Gasket – Intake Manifold	1
†94	808257	Valve – Idle Adjust	1
†102	805541	Gasket – Carburetor Body	1
†104	805545	Pin – Float Hinge	1
†105	805547	Valve – Fuel Inlet	1
121	808273	Carburetor Kit	1
†127	805559	Plug – Welch	1
†142	805553	Nozzle – Carburetor	1
*‡167	805420	Washer – Valve Cover	1

Ref. No.	Part No.	Description	No. Used
‡171	805019	Nut – Nylock	1
*‡524A	271983	Seal – Filler Plug	1
†634A	805557	Collar – Throttle	1
†634B	805543	Collar – Choke	1
*‡883	805024	Gasket – Exhaust	1
†987	805544	Seal – Shaft	1
*‡1022	806039	Gasket – Valve Cover	1
1033	808392	Overhaul Kit – Valve	1
†1091	805862	Cap – Limiter	1

*Included in Gasket Set – Part No. 808704.
†Included in Carburetor Kit – Part No. 808273.
‡Included in Valve Overhaul Kit – Part No. 808392.

TORO PART NUMBER INDEX

Part No.	Description	Pg. No.	Ref. No.	Qty.
117344	Handle−Latch	1	33	2
3−6498	Washer−Thrust	16	17	1
10−6830	Stud−Drive	4	18	4
10−6850	Drum−Brake	23	9	2
10−7070	Key−Square	11	22	1
18−6320	Washer−Steering	4	24	4
18−6380	Pin−Steering Adjustment	4	21	2
18−6380	Pin−Steering, Adjust	16	12	1
18−7160	Pin−Cylinder	19	13	1
18−7310	Pin−Cylinder, Rake	19	8	1
21−8640	Latch−Lever, Valve	17	20	1
22−4670	Hose−Hydraulic	19	4	2
22−4670	Hose−Hydraulic	17	30	2
22−4670	Hose−Hydraulic	11	34	2
22−8330	Plug	18	1	2
22−8340	Spring	18	3	2
22−8350	Ball	18	4	2
22−8360	Pin−Cam	18	6	2
22−8370	Seat−Check Valve	18	5	2
22−8380	Retainer−Spring	18	10	2
22−8390	Spring Retainer	18	12	1
22−8400	Spacer Float	18	13	1
22−8410	Spring	18	11	1
22−8420	Spool	18	8	1
22−8480	Ring−Spool Retaining	18	14	1
22−8490	Ring−Retaining	18	15	1
22−8500	O−Ring	18	9	2
23−9740	Filter−Oil	25	12	1
25−2380	Plate−Thrust	13	50	1
25−2400	Gasket−Cap, End	12	14	1
25−2430	Pin	12	13	1
25−2450	Swashplate	13	48	1
25−2460	Plug	12	29	2
25−2470	Kit−Shim	12	30	2
25−2480	Spring	12	42	1
25−2490	Ball	12	4	2
25−2500	Shaft−Trunnion	12	43	1
25−2510	Washer	12	26	2
25−2570	Spring	12	31	1
25−2600	Kit−Cylinder Block	12	16	1
25−2640	Spring	12	3	2
25−2650	Plug	12	1	2
25−2690	Housing−Pump, Charge	12	35	1
25−3180	Kit−Valve, Check	13	*	1
25−3210	Seal−Lip	12	25	2
26−2950	Standoff−Wire	11	7	1
26−3790	Nut−Lock	23	4	2
26−3790	Nut−Lock	4	39	1
27−1960	Hub−Engine	11	21	1
27−2320	Bearing−Side Flange	23	26	2
28−4210	Solenoid−Starter	7	17	1
28−8080	Boot−Terminal	24	33	1
29−6163	Switch−Neutral	16	2	1
38−3400	Bumper	10	45	1
38−3400	Snubber−Rubber	19	41	2
38−3400	Snubber−Rubber	2	44	1
43−1710	Asm−Valve	17	14	1
43−5220	Ring−Retaining	22	12	1
43−5230	Shaft with Clevis	22	13	1
43−5260	Barrel−w/Clevis & Ports	22	2	1
46−8400	Bearing−Roller	13	51	1
46−8560	Screw−HFH	1	9	6
49−2040	Screw−HFH	16	8	3
49−8510	Kit−Relief, Charge	13	*	1
49−8520	Kit−Implement Relief	13	*	1
49−9600	Hub−Pump	11	24	1
51−0600	Hose−Hydraulic	19	30	2
51−0780	Slider−Seat	9	35	1
51−0790	Slider−Seat, Adjustment	9	34	1
52−2480	Spacer	19	40	1
56−7720	Bolt−Battery	24	16	2
56−7976	Clamp−Tube	19	31	2
57−5420	Screw−Shoulder	25	2	1
63−8360	Key−Ignition	7	7	2
65−8770	Bushing−Flange	4	7	2
66−0120	Knob−Throttle	7	5	1
66−2950	Asm−Hourmeter	7	2	1
67−8050	Bearing−Needle	12	37	1
67−8060	Seal−Lip	12	36	1
68−8990	Asm−Head, Filter	25	8	1
69−8930	Washer	19	21	4
69−8960	Spacer	19	22	2
69−9760	Plate−Cover	19	32	1
70−2770	Head	22	10	1
70−2780	Piston	22	5	1
70−9840	Lining−Shoe	23	33	4
70−9850	Clip−Retaining	23	31	2
70−9860	Shaft−Cam	23	36	2
70−9870	Plate−Backing	23	10	2
70−9880	Spring−Return	23	32	4
71−1500	Asm−Brake	23	*	2
71−4411	Spacer−Coupling	11	18	4
74−0340	Cushion−Rubber	9	10	2
74−0720	Tube−Manual	9	5	1
74−9100	Pad−Pedal, Forward	15	15	1
74−9110	Pad−Pedal, Reverse	15	5	1
75−0540	Tether−Oil Cap	25	27	1
75−4705	Hose−Fuel	10	8	1
75−5470	Spacer	16	22	1
75−9830	Motor−Hydraulic, Wheel	4	42	1
75−9831	Hydraulic Motor−Wheel	19	12	1
75−9840	Hydraulic Motor−Wheel	19	16	1
76−0810	Asm−Housing	20	*	1
76−0810	Asm−Housing	21	*	1
76−0810	Asm−Housing	6	*	1
76−0820	Link−Drive	20	13	1
76−0820	Link−Drive	21	13	7
76−0820	Link−Drive	6	13	7
76−0830	Rotor Set	20	*	1
76−0830	Rotor Set	21	*	1
76−0840	Manifold	20	22	1
76−0840	Manifold	21	22	1
76−0840	Manifold	6	22	1
76−0850	Bearing−Thrust	20	12	1
76−0850	Bearing−Thrust	21	12	1
76−0850	Bearing−Thrust	6	12	1
76−0860	Shaft−Coupling	20	11	1
76−0860	Shaft−Coupling	21	11	1
76−0860	Shaft−Coupling	6	11	1
76−0870	Plate−Wear	20	18	1
76−0870	Plate−Wear	21	18	1
76−0870	Plate−Wear	6	18	1
76−0880	Asm−Commutator	20	*	1
76−0880	Asm−Commutator	21	*	1
76−0880	Asm−Commutator	6	*	1
76−0890	Asm−Cover, End	20	29	1
76−0940	Asm−Cover, End	21	24	1
76−0940	Asm−Cover, End	6	24	1
76−0950	Rotor Set	6	*	1
76−1020	Screw−HH	21	14	1
76−1030	Screw−HH	6	14	1
76−1040	Screw−HH	20	14	7
76−1420	Wheel−Steering	4	1	1
76−8640	Stud−Traction	16	18	1
80−8650	Coupling−Rubber	11	23	2
83−0020	Asm−Ignition Switch	7	12	1
83−1390	Fitting−Fuel Shut−Off	24	24	1
83−1770	Element−Air Cleaner	10	31	1
83−2490	Boot	10	42	1
83−7000	Cylinder−Hydraulic	19	7	1
83−7250	Kit−Seal Repair	22	*	1
83−7260	Cone−Charge Relief	12	32	2
83−9310	Arm−Brake, RH	23	30	2
84−1990	Rod−Adjusting	23	11	2

*Not Illustrated

TORO PART NUMBER INDEX (Cont.)

Part No.	Description	Pg. No.	Ref. No.	Qty.
84−2000	Bracket−Brake	23	12	2
85−0290	Spacer−Support, Seat	17	17	2
85−0420	Plate−Cover	10	32	1
85−0430	Knob−Air Cleaner	10	36	1
85−0470	Gasket−Carburetor	10	39	1
85−0540	Screw	10	38	4
85−6540	Stud−Drive Type	23	1	8
85−6610	Shaft−Steering Upper	4	3	1
85−8290	Tire	23	2	2
85−8290	Tire	4	19	1
85−8300	Lever−Pump	16	5	1
85−8360	Gasket−Ring	10	20	1
85−8370	Asm−Cover, Air Cleaner	10	19	1
85−8430	Asm−Base, Air Cleaner	10	21	1
85−8460	Asm−Switch Arm	16	15	1
85−8940	Flangette−Relube	4	17	1
85−8950	Flangette−Standard	4	15	1
85−8960	Spacer	15	4	1
85−9030	Spring−Extension	16	13	1
85−9120	Spacer	16	21	1
85−9150	Plate−Switch	16	3	1
85−9180	Sprocket	4	9	1
85−9200	Knuckle−Steering	4	33	1
85−9550	Clamp−Rubber	1	3	2
85−9670	T−Nut	1	4	2
86−7450	Wire−Battery, Ground	10	26	1
86−7450	Wire−Battery−Ground	24	27	1
86−7450	Wire−Ground, Battery	8	4	1
86−7570	Asm−Wire	10	27	1
86−7570	Wire−Battery, Solenoid	24	34	1
86−7610	Plate−Seat	9	33	1
86−7640	Box−Litter	24	26	1
88−8170	Asm−Housing, Variable	12	45	1
88−8180	Shaft−Trunnion	12	27	1
88−8190	Bearing−Journal	12	24	1
88−8210	Plug	12	33	2
88−8230	Seal−Lip	13	53	1
88−8350	Tab− Bearing	4	11	1
88−8480	Bracket−Pivot	17	9	1
88−8640	Knob−Air Cleaner	10	35	3
92−1678	Battery	24	15	1
92−1705	Screen−Filter	25	20	1
92−1715	Spacer	23	13	8
92−2343	Pedal	15	6	1
92−2344	Stud−Adjuster, Trunnion	15	11	1
92−5018	Clamp−Battery	24	12	1
92−5035	Asm−Steering Shaft	4	5	1
92−5039	Chain	4	23	1
92−7152	Hose−Fuel	24	8	1
92−7158	Tread−Floor, RH	1	25	1
92−7159	Tread−Floor, LH	1	13	1
92−7160	Clip−Fuel Hose	24	9	1
92−7179	Plate−Chain Stop	5	57	1
92−7186	Tank−Fuel	24	2	1
92−8776	Plug	12	5	2
92−8777	O−Ring	12	6	2
92−8969	Spindle	4	38	1
92−8972	Clamp−Seat	9	8	2
92−8973	Angle	9	12	2
92−8976	Seat	9	1	1
92−8981	Lever−Lift	17	6	1
92−8983	Pivot	17	18	1
92−8985	Decal−Operating	1	7	1
92−8996	Screen	10	6	1
92−8997	Cooler−Oil	1	2	1
93−2195	Element−Air Cleaner	3	3	1
93−4365	Asm−Oil Cap	25	1	1
93−6668	Decal−Battery	24	29	1
93−6838	Hub−Wheel	23	5	2
93−6838	Hub−Wheel	4	40	1
93−6850	Lever−Brake	23	14	2
93−7170	Cap−Fuel	24	1	1
93−7251	Decal−Service (Europe)	9	9	1
93−7252	Decal−CE Mark	1	28	1
93−7276	Decal−Danger	24	30	1
93−9051	Decal−Eccentric Bolt	16	9	1
93−9052	Decal−Shields	7	35	1
94−1392	Pad−Rubber	1	32	2
94−1414	Valve−Vacuator	3	5	1
94−1883	Fender−Rear, LH	26	9	1
94−1884	Fender−Rear, RH	26	1	1
94−1885	Bracket−Support, Fender	26	8	1
94−1886	Bracket−Support, Fender	26	7	1
94−1887	Bracket−Support, Fender	26	10	1
94−1888	Bracket−Support, Fender	26	5	1
94−2690	Filter−Fuel	24	31	1
94−3652	Asm−Cover	3	4	1
94−4519	Tube−Convoluted	2	39	1
94−6116	Rim	23	34	2
94−6116	Rim−Wheel	4	48	1
94−6821	R−Clamp	4	45	2
94−8178	Kit−Seal	20	*	1
94−8178	Kit−Seal	21	*	1
94−8178	Kit−Seal	6	*	1
95−0550	Asm−Manifold	10	18	1
95−0551	Tube−Exhaust	10	17	1
95−0552	Muffler	10	1	1
95−0553	Plate−Pump	16	10	1
95−0555	Hose−Hydraulic	25	24	1
95−0555	Hose−Suction	11	8	1
95−0556	Base−Engine	10	15	1
95−0557	Bracket−Muffler	10	7	1
95−0559	Tube−Rear,RH Rear Motor	19	2	1
95−0560	Tube−Front, LH Rear Motor	19	9	1
95−0562	Tube−Front, Motor RH	19	27	1
95−0563	Tube−Front, Motor LH	19	28	1
95−0563	Tube−Front, Motor LH	2	45	1
95−0564	Tube−Front, RH Rear Motor	19	1	1
95−0567	Tube−Rear, LH Rear Motor	19	10	1
95−0568	Bracket−Bulkhead	19	26	1
95−0574	Harness−Wire	8	1	1
95−0574	Harness−Wire	7	34	1
95−0574	Harness−Wire	11	35	1
95−0574	Harness−Wire	10	43	1
95−0574	Wire Harness	2	40	1
95−0575	Tube−Shuttle Valve	19	17	1
95−0575	Tube−Valve, Shuttle	17	33	1
95−0576	Base−Fuel Tank	24	4	1
95−0577	Fitting−Bulkhead, Tee	19	25	2
95−0582	Hose−Air	1	22	1
95−0582	Hose−Air	10	33	1
95−0584	Rod−Pump, Control	15	10	1
95−0586	Asm−Clamp, Muffler	10	4	2
95−0587	Asm−Hydraulic Pump	11	9	1
95−0590	Base−Hydraulic Tank	25	18	1
95−0591	Hose−Hydraulic	11	14	1
95−0591	Hose−Hydraulic	2	43	1
95−0592	Hose−Hydraulic	11	11	1
95−0592	Hose−Hydraulic	17	32	1
95−0595	Asm−Hydraulic Hose	11	5	2
95−0595	Hose−Hydraulic	19	35	2
95−0597	Asm−Choke Control	7	6	1
95−0598	Control−Throttle	7	15	1
95−0599	Asm−Wire	24	*	1
95−0599	Asm−Wire	7	19	1
95−0599	Asm−Wire	2	42	1
95−0599	Asm.−Wire	8	2	1
95−0600	Asm−Frame	4	29	1
95−0601	Shroud−Lift Valve	17	2	1
95−0607	Decal−Sand Pro 3020	1	27	2
95−0610	Asm−Cover	1	8	1
95−0611	Bracket−RH	2	34	1
95−0612	Bracket−LH	2	35	1
95−0618	Hose−Fuel	24	22	1

*Not Illustrated

TORO PART NUMBER INDEX (Cont.)

Part No.	Description	Pg. No.	Ref. No.	Qty.
95−0619	Hose−Gas Line	10	12	1
95−0619	Hose−Gas Line	24	32	1
95−0620	Strip−Retainer	1	19	1
95−0625	Rod−Traverse	23	24	1
95−0628	Rod−Brake	23	25	1
95−0628	Rod−Brake	17	35	1
95−0629	Fitting−Hose, Push On	11	10	1
95−0629	Fitting−Hydraulic 90°	25	16	1
95−0631	Mount−Pump	11	25	1
95−0632	Asm−Cover	11	2	1
95−0636	Lever−Brake	17	21	1
95−0637	Plate−Seat	9	11	1
95−0642	Locknut−Bulkhead	19	24	2
95−0643	Tube−Hydraulic	17	34	1
95−0643	Tube−Valve to Cooler	1	6	1
95−0645	Plate−Hot Surface	10	25	1
95−0646	Decal−Service	9	9	1
95−0647	Decal−Control Panel	17	1	1
95−0648	Decal−Dash	7	9	1
95−5805	Asm−Air Cleaner	1	23	1
95−5806	Asm−Band, Mounting	1	24	1
95−5807	Spacer	1	16	2
95−5808	Cap−End	12	7	1
95−5809	Ball Bearing	12	20	1
95−5810	Shaft	13	47	1
95−5811	Plate−Valve	12	15	1
95−5812	Asm.−Gerotor	12	39	1
95−5813	Ring−Retaining	12	21	1
95−5814	Valve−Acceleration	12	9	2
95−5815	Spring−Valve, Acceleration	12	8	1
95−5816	Plug	12	11	2
95−5817	Shield−Front	1	26	1
95−5825	Asm−Wire	7	18	1
95−5825	Asm−Wire	2	41	1
95−5825	Wire	8	3	1
95−5826	Shield−Rubber	1	20	1
95−5827	Shield−Muffler	10	22	1
95−5828	Strip−Wear	2	38	2
95−5833	Guide−Lever, Lift	17	36	1
95−5840	Shield−Base, Seat	9	28	1
95−7861	Decal−Infield Pro 3020	2	*	2
98−0924	Guide−Chain	5	54	1
98−0925	Bracket−Chain	5	55	1
98−0928	Shaft−Steering, Lower	4	34	1
98−0940	Asm−Engine	10	16	1
98−0950	Fork	4	10	1
98−0968	Tank−Hydraulic	25	4	1
98−0973	Pin−Grooved	4	8	1
98−0992	Shield−Carburetor, Inlet	10	29	1
98−8152	Hose−Hydraulic	25	14	1
98−8153	Hose−Return	11	4	1
98−8153	Hose−Return	25	28	1
98−8154	Screw−Washer Face	10	37	5
99−1644	Hood	1	1	1
99−1646	Panel−Dash	7	11	1
218−461	Nut−Hex.	7	26	1
232−35	Stem−Valve	23	35	2
232−35	Stem−Valve	4	46	1
233−21	Knob	17	5	1
237−30	O−Ring	12	12	2
237−42	O−Ring	18	2	2
237−42	O−Ring	17	31	2
237−42	O−Ring	11	32	2
237−42	O−Ring	19	39	1
237−78	O−Ring	22	1	2
237−78	O−Ring	20	25	2
237−78	O−Ring	17	29	2
237−78	O−Ring	19	36	2
237−79	O−Ring	12	10	3
237−79	O−Ring	25	22	1
237−79	O−Ring	1	29	2
237−79	O−Ring	11	29	3
237−79	O−Ring	19	37	4
237−80	O−Ring	11	31	1
237−80	O−Ring	12	34	2
237−80	O−Ring	4	49	2
237−81	O−Ring	25	23	2
237−86	O−Ring	12	2	4
237−95	O−Ring	12	40	1
237−117	O−Ring	25	25	1
240−5	Grommet−Rubber	19	23	2
240−9	Grommet	24	25	3
240−11	Grommet	24	3	4
240−11	Grommet	25	19	4
242−50	Nut−Lug	23	3	8
242−50	Nut−Lug	4	13	4
249−40	Keeper	2	36	2
2410−73	Retainer−Tether	25	26	1
2412−36	Clamp	25	13	1
2412−36	Clamp	11	36	1
2412−36	Clamp−Hose	24	7	2
2412−73	Clamp−R	24	20	1
2412−73	R−Clamp	10	14	1
2412−92	Clamp−Hose	1	21	2
2412−92	Clamp−Hose	10	34	1
2412−98	Clamp−Hose	24	23	4
2412−98	Clamp−Hose	10	28	1
2412−129	Clamp−Hose	11	30	1
2412−129	Clamp−Worm	25	3	4
2412−133	Clamp−R	9	3	2
251−307	Bearing	16	20	2
251−352	Asm−Bearing	4	16	1
252−82	Bearing−Needle	12	44	1
254−61	Cup−Bearing	4	28	2
254−70	Cone−Bearing	4	25	2
256−113	Bushing−Flange	16	14	2
256−185	Bushing−Sleeve	4	4	1
256−219	Bushing−Flange	15	3	2
2710−11	Link−Connecting	4	22	2
2710−20	Link−Offset	17	8	1
282−2	Clevis	23	15	2
282−2	Clevis	17	22	1
283−1	Pin−Clevis	23	16	2
283−14	Pin−Clevis	17	24	1
285−17	Plug	3	1	1
285−17	Plug−Pipe	12	23	2
302−2	Fitting−Grease	4	26	1
302−2	Fitting−Grease	5	60	1
302−33	Fitting−Grease	5	53	1
302−60	Fitting−Grease	16	16	1
321−3	Screw−HH	25	6	2
321−4	Screw−HH	9	31	3
321−4	Screw−HH	23	17	8
321−18	Screw−HH	19	29	1
321−23	Screw−HH	17	15	4
322−2	Screw−HH	1	18	2
322−2	Screw−HH	5	58	2
322−3	Screw−HH	24	18	2
322−4	Screw−HH	12	38	4
322−5	Screw−HH	4	6	4
322−5	Screw−HH	1	15	4
322−6	Screw−HH	10	2	3
322−6	Screw−HH	9	2	4
322−8	Screw−HH	16	19	1
322−8	Screw−HH	17	28	2
322−10	Screw−HH	10	13	4
322−14	Screw−HH	15	1	1
322−14	Screw−HH	1	11	2
322−17	Screw−HH	11	19	4
323−6	Screw−HH	25	10	3
323−6	Screw−HH	24	13	3
323−6	Screw−HH	11	15	6
323−7	Screw−HH	26	6	6
323−10	Screw−HH	16	4	1

*Not Illustrated

TORO PART NUMBER INDEX (Cont.)

Part No.	Description	Pg. No.	Ref. No.	Qty.
323−29	Screw−HH	4	14	3
323−45	Screw−HH	13	55	4
325−5	Screw−HH	19	19	4
325−7	Screw−HH	11	6	2
325−10	Screw−HH	5	59	2
325−14	Screw−HH	23	6	8
3217−9	Nut−Hex.	23	8	4
3217−9	Nut−Hex.	11	27	2
3217−25	Nut−Hex.	7	33	2
3218−5	Nut−Jam	15	12	2
3218−13	Nut−Jam	7	22	2
3219−3	Nut−Hex.	7	14	1
3219−14	Nut−Hex.	7	24	4
3220−2	Nut−Hex.	17	23	1
3220−2	Nut−Jam	23	18	2
3234−1	Screw−HHF	23	29	4
3234−4	Screw−HH	17	3	2
3234−14	Screw−HH	9	7	4
3234−33	Screw−HFH	1	14	3
3234−33	Screw−HH	7	1	4
3241−5	Screw−Set, Square Hd.	11	20	4
3250−36	Screw−PPH	24	6	4
3250−36	Screw−PPH	25	17	3
3253−3	Washer−Lock	25	7	2
3253−4	Washer−Lock	7	23	2
3253−4	Washer−Lock	5	56	2
3253−5	Washer−Lock	11	3	6
3253−7	Washer−Lock	23	7	8
3253−7	Washer−Lock	11	28	2
3253−17	Washer−Lock	7	25	2
3254−5	Washer−Lock ITLW	7	27	1
3254−6	Washer−Lock ITLW	7	13	1
3255−7	Washer−Lock, Int. Tooth	10	24	3
3255−8	Washer−Lock, Ext. Tooth	10	11	1
3255−20	Washer−Lock ITLW	7	32	2
3256−1	Washer−Flat	10	10	4
3256−3	Washer−Flat	9	4	4
3256−4	Washer−Flat	25	21	3
3256−4	Washer−Flat	24	28	4
3256−22	Washer−Flat	24	11	2
3256−23	Washer−Flat	15	2	1
3256−23	Washer−Flat	10	3	6
3256−23	Washer−Flat	1	10	4
3256−23	Washer−Flat	11	17	4
3256−23	Washer−Flat	17	26	1
3256−24	Washer−Flat	25	9	3
3256−24	Washer−Flat	15	13	2
3256−24	Washer−Flat	24	14	3
3256−24	Washer−Flat	23	28	4
3256−25	Washer−Flat	15	9	1
3256−26	Washer−Flat	19	20	4
3256−70	Washer−Flat	26	2	16
3256−78	Washer−Flat	19	34	1
3256−82	Washer−Flat	1	17	2
3257−32	Key−Woodruff	12	19	2
3257−32	Key−Woodruff	11	26	1
3257−42	Key−Woodruff	20	17	1
3257−42	Key−Woodruff	21	17	1
3257−42	Key−Woodruff	6	17	1
3257−42	Key−Woodruff	19	38	2
3257−42	Key−Woodruff	4	51	1
3269−8	Rivet−Pop	1	30	6
3269−32	Rivet−Pop	10	9	2
3272−6	Pin−Cotter	23	19	3
3272−6	Pin−Cotter	17	25	1
3272−10	Pin−Cotter	23	20	2
3272−16	Pin−Cotter	15	8	1
3272−23	Pin−Cotter	19	6	4
3272−37	Pin−Cotter	4	30	1
3274−12	Screw−HSH	9	36	4
3274−55	Screw−HSBH	26	3	8
3274−69	Screw−HSBH	24	21	1
3274−93	Screw−HSH	4	44	2
3290−360	Screw−HH	17	7	2
3290−378	Tie−Cable	11	33	1
3290−379	Tie−Cable	10	44	1
3290−379	Tie−Wire	2	37	3
3290−477	Washer−Wave	17	37	1
3295−26	Rivet−Semi Tubular	1	31	2
3296−2	Nut−Lock	17	10	2
3296−4	Nut−Lock	16	11	1
3296−4	Nut−Lock	4	20	2
3296−8	Nut−Lock	19	33	1
3296−9	Nut−Lock	16	1	2
3296−12	Nut−Lock	7	16	2
3296−23	Nut−Lock	4	43	2
3296−25	Nut−Lock	4	52	2
3296−29	Nut−Lock	26	4	8
3296−29	Nut−Lock	10	5	7
3296−29	Nut−Lock	9	6	12
3296−29	Nut−Lock	15	7	1
3296−29	Nut−Lock	16	7	2
3296−29	Nut−Lock	1	12	6
3296−29	Nut−Lock	11	16	4
3296−29	Nut−Lock	24	17	2
3296−29	Nut−Lock	17	27	2
3296−29	Nut−Lock	4	35	4
3296−39	Nut−Lock	24	5	3
3296−39	Nut−Lock	4	12	3
3296−39	Nut−Lock	15	14	1
3296−39	Nut−Lock	25	15	3
3296−39	Nut−Lock	16	23	1
3296−42	Nut−Lock	17	11	4
3296−42	Nut−Lock	24	19	1
3296−42	Nut−Lock	23	21	8
3296−42	Nut−Lock	9	30	3
3296−59	Nut−Lock	23	27	4
32103−12	Nut−Wing	24	10	2
32104−76	Screw−Self Tapping	17	16	1
32104−95	Screw−Self Tapping	7	20	2
32105−2	Screw−HH	7	4	2
32105−21	Screw−Machine	16	6	2
32120−11	Ring−Retaining	12	46	1
32121−6	Pin−Roll	23	23	3
32121−15	Pin−Spiral	4	32	2
32121−73	Pin−Spring	17	19	1
32121−91	Pin−Spring	13	49	4
32121−111	Pin−Spiral	4	2	1
32136−9	Nut−Slotted	4	31	1
32144−11	Screw−HFH.	7	3	2
32144−14	Screw−HWHTF	19	3	2
32151−46	Ring−Retaining	12	28	2
32152−10	Nut	22	3	1
33113−008	Screw	10	41	5
33113−012	Screw−HH	10	23	2
353−212	Fitting−Hydraulic 45°	17	13	1
353−212	Fitting−Hydraulic 45°	19	15	1
353−371	Fitting−Hydraulic 90°	1	5	2
353−374	Fitting−Hydraulic 90°	11	13	1
353−426	Fitting−Hydraulic 90°	19	11	4
353−427	Fitting−Hydraulic 45°	4	41	2
353−431	Fitting−Hydraulic 45°	19	14	1
353−511	Fitting−Hydraulic 90°	17	4	1
353−511	Fitting−Hydraulic 90°	11	12	1
353−877	Fitting− Swivel Run Tee	17	12	1
353−987	Fitting−Hydraulic 90°	25	11	2
353−988	Plug	12	22	1
353−990	Plug	20	24	2
354−120	Fitting−Hydraulic 45°	25	5	1
354−126	Fitting−Barb	11	37	1
354−132	Fitting−Hydraulic 90°	19	5	1

*Not Illustrated

PRODUCT CHANGES

In an effort to make improvements available to TORO owners as quickly as possible, minor changes are incorporated into Toro's products from time to time that do not become immediately shown in the Parts Catalog. If such a change has been made in your unit, which is not reflected in your manual, see your TORO Distributor or his Authorized TORO Service Dealer for information and part numbers.

IDENTIFICATION AND ORDERING

MODEL AND SERIAL NUMBERS

The Sand Pro 3020 has two identification numbers; a model number and a serial number. The two numbers are stamped on a plate located on the left fender. In any correspondence concerning the Sand Pro 3020, supply model and serial numbers to assure that correct information and replacement parts are obtained.

To order replacement parts from an Authorized TORO Service Dealer, supply the following information:
1. Model and serial number of the Sand Pro 3020.
2. Part number, description, and the quantity of part(s) desired.

NOTE: Do not order by reference number if a parts catalog is being used; use the PART NUMBER.

TABLE OF CONTENTS

Description	Page
Shrouding & Oil Cooler Asm	1 – 2
Air Cleaner Asm No. 95 – 5805	3
Front Wheel & Steering Asm	4 – 5
Hydraulic Drive Motor Front No. 75 – 9830	6
Dash Panel Asm	7
Electrical Schematic	8
Seat Asm	9
Engine Installation Asm	10
Hydraulic Pump Installation Asm	11
Hydraulic Pump Asm No. 95 – 0587	12 – 13
Hydraulic Schematic	14
Traction Pedal Asm	15
Pump Control Lever Asm	16
Lift Valve Installation Asm	17
Hydraulic Lift Valve Asm No. 43 – 1710	18
Rear Wheel Drive Asm	19
Hydraulic Drive Motor Right Rear Right Rear No. 75 – 9840	20
Hydraulic Drive Motor Left Rear Left Rear No. 75 – 9831	21
Hydraulic Cylinder Asm No. 83 – 7000	22
Rear Wheel Brake Asm	23
Fuel Tank Asm	24
Hydraulic Oil Reservoir & Filter Asm	25
Fender Asm – Europe	26
Engine – Briggs & Stratton Model 303447 – 1180 – E1	27 – 37
TORO Part Number Index	38 – 41

MAINTENANCE RECORD

Date								

MAINTENANCE RECORD

Date								

Compliance with Radio Interference Regulations Certified.
Certifie Conforme au Reglement sur le Brouillage Radioelectrique.

Litho in U.S.A.