Form No. 3421-187 Rev A

TORO®

Count on it.

Operator's Manual

# FP-2200 Forward Plate Compactor

**Model No. 68025—Serial No. 402300000 and Up**
**Model No. 68026—Serial No. 402300000 and Up**
**Model No. 68027—Serial No. 402300000 and Up**

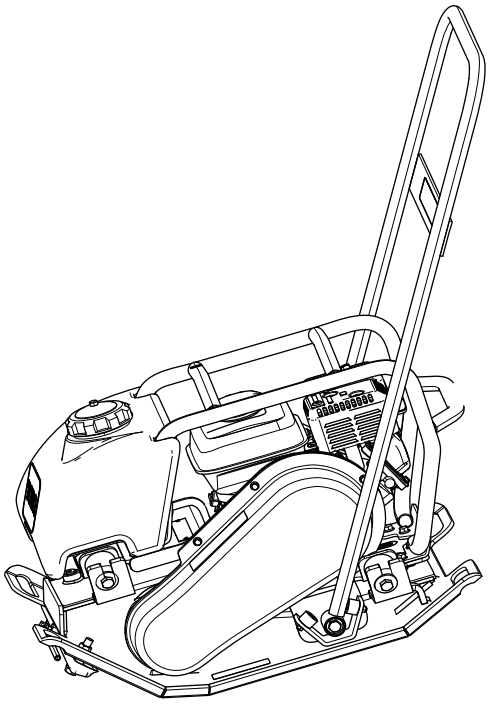

g027689

Register at www.Toro.com.
Original Instructions (EN)

*3421-187* A

**⚠ WARNING**

**CALIFORNIA**
**Proposition 65 Warning**

**This product contains a chemical or chemicals known to the State of California to cause cancer, birth defects, or reproductive harm.**

**The engine exhaust from this product contains chemicals known to the State of California to cause cancer, birth defects, or other reproductive harm.**

This engine is not equipped with a spark arrester muffler. It is a violation of California Public Resource Code Section 4442 to use or operate the engine on any forest-covered, brush-covered, or grass-covered land. Other states or federal areas may have similar laws.

# Introduction

This machine is designed to compact a wide array of soil substances, including clay, silt, gravel, sand, and loam.

Read this information carefully to learn how to operate and maintain your product properly and to avoid injury and product damage. You are responsible for operating the product properly and safely.

You may contact Toro directly at www.Toro.com for product and accessory information, help finding a dealer, or to register your product.

Whenever you need service, genuine Toro parts, or additional information, contact an Authorized Service Dealer or Toro Customer Service and have the model and serial numbers of your product ready. Figure 1 illustrates the location of the model and serial numbers on the product. Write the numbers in the space provided.

***Important:*** **With your mobile device, you can scan the QR code on the serial number decal (if equipped) to access warranty, parts, and other product information.**

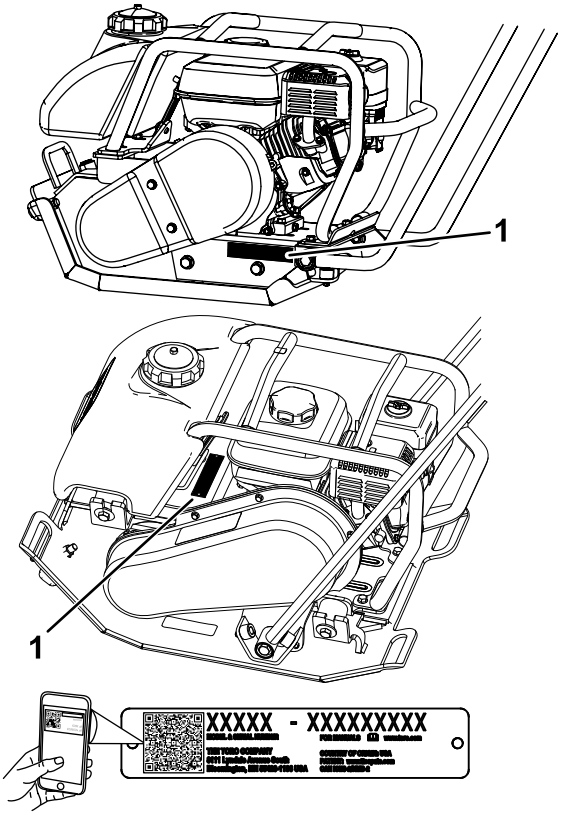


g239795

**Figure 1**
2200—Top; 3000/4000—Bottom

1. Model and serial number location

**Model No.** _____

**Serial No.** _____

This manual identifies potential hazards and has safety messages identified by the safety-alert symbol (Figure 2), which signals a hazard that may cause serious injury or death if you do not follow the recommended precautions.

g000502

**Figure 2**

1. Safety alert symbol

This manual uses 2 words to highlight information. **Important** calls attention to special mechanical information and **Note** emphasizes general information worthy of special attention.

© 2018—The Toro® Company
8111 Lyndale Avenue South
Bloomington, MN 55420



Contact us at www.Toro.com.
Printed in the USA
All Rights Reserved

# Contents

Safety ..... 3
Safe Operating Practices ..... 3
Safety and Instructional Decals ..... 5
Setup ..... 6
Installing the Handle ..... 6
Checking the Engine-Oil Level ..... 6
Checking the Eccentric-Oil Level ..... 6
Product Overview ..... 7
Operation ..... 7
Checking the Engine-Oil Level ..... 7
Cleaning Debris from the Machine ..... 8
Adding Fuel ..... 8
Compacting Asphalt ..... 10
Starting the Engine ..... 11
Shutting Off the Engine ..... 12
Operating the Compactor ..... 12
Transporting the Machine ..... 12
Maintenance ..... 13
Recommended Maintenance Schedule(s) ..... 13
Disconnecting the Spark-Plug Wire ..... 13
Engine Maintenance ..... 13
Belt Maintenance ..... 18
Storage ..... 20
Troubleshooting ..... 21

# Safety

Improper use or maintenance by the operator or owner can result in injury. To reduce the potential for injury, comply with these safety instructions and always pay attention to the safety alert symbol, which means **Caution**, **Warning**, or **Danger**—personal safety instruction. Failure to comply with the instruction may result in personal injury or death.

## Safe Operating Practices

This product is capable of causing serious injury. Always follow all safety instructions to avoid serious injury or death.

**⚠ WARNING**

**Engine exhaust contains carbon monoxide, an odorless, deadly poison which is lethal if inhaled.**

**Do not run the engine indoors or in an enclosed area.**

### Training

- Read the *Operator's Manual* and other training material. If the operator(s) or mechanic(s) cannot read or understand the information, it is the owner's responsibility to explain this material to them.
- Become familiar with the safe operation of the equipment, operator controls, and safety signs.
- All operators and mechanics should be trained. The owner is responsible for training the users.
- Never let children or untrained people operate or service the equipment. Local regulations may restrict the age of the operator.
- The owner/user can prevent and is responsible for accidents or injuries occurring people or damage to property.

### Preparation

- Wear appropriate clothing including hard hat, eye protection, long pants, substantial, slip-resistant footwear, and hearing protection. Tie back long hair, secure loose clothing, and do not wear loose jewelry.
- Inspect the area where the equipment is to be used and ensure that all objects are removed from the area before use.
- Use extra care when handling fuel. They are flammable and vapors are explosive.
  - Extinguish all cigarettes, cigars, pipes, and other sources of ignition.

- Use only an approved container
- Do not remove the fuel cap or fill the fuel tank while the engine is running or hot.
- Do not add or drain fuel in an enclosed space.
- Do not store the machine or fuel container where there is an open flame, spark, or pilot light, such as on a water heater or other appliance.
- If you spill fuel, do not attempt to start the engine; avoid creating any source of ignition until the fuel vapors have dissipated.

- Check that the shields are attached and functioning properly. Do not operate unless they are functioning properly.

## Operation

- Use your full attention while operating the machine. Do not engage in any activity that causes distractions; otherwise, injury or property damage may occur.
- Never run an engine in an enclosed or poorly ventilated area.
- Operate the machine only in good light, keeping away from holes and hidden hazards.
- Stop on level ground, set the throttle to slow, and shut off the engine before leaving the operator's position for any reason.
- Ensure that the area is clear of other people before operating the machine. Shut off the machine if anyone enters the area.
- Keep bystanders out of the operating area. Stop the machine if anyone enters the area.
- Keep your feet clear of the plate compactor.
- Do not operate the machine while ill, tired, or under the influence of alcohol or drugs.
- Do not change the engine governor setting or overspeed the engine.
- Use care when loading or unloading the machine into a trailer or truck.
- Do not touch parts which may be hot from operation. Allow them to cool before attempting to maintain, adjust, or service.
- Lightning can cause severe injury or death. If lightning is seen or thunder is heard in the area, do not operate the machine; seek shelter.

## Maintenance and Storage

- Let the engine cool before storing and do not store the machine near an open flame.
- Position the machine on a level surface, set the throttle to slow, and shut off the engine. Wait for all movement to stop before adjusting, cleaning, or repairing.
- Clean debris from drives, mufflers, and the engine to help prevent fires. Clean up oil or fuel spills.
- Do not store fuel near flames or drain indoors.
- Never allow untrained personnel to service the machine.
- Carefully release pressure from components with stored energy.
- Disconnect the spark plug before making any repairs.
- Keep hands and feet away from moving parts. If possible, do not make adjustments with the engine running.
- Keep all parts in good working condition and all hardware tightened. Replace all worn or damaged decals.
- Keep nuts and bolts tight. Keep equipment in good condition.
- Stop and inspect the equipment if you strike an object. Make any necessary repairs before restarting.
- Use only genuine Toro replacement parts to ensure that original standards are maintained.

# Safety and Instructional Decals

Safety decals and instructions are easily visible to the operator and are located near any area of potential danger. Replace any decal that is damaged or missing.

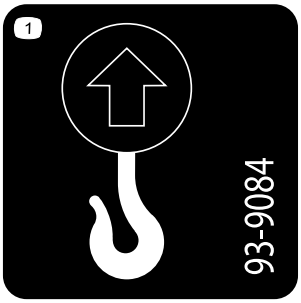


decal93-9084

**93-9084**

1. Lift point

decal133-5619

**133-5619**

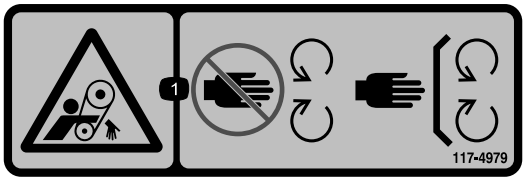


decal117-4979

**117-4979**

1. Entanglement hazard, belt—keep away from moving parts; keep all guards and shields in place

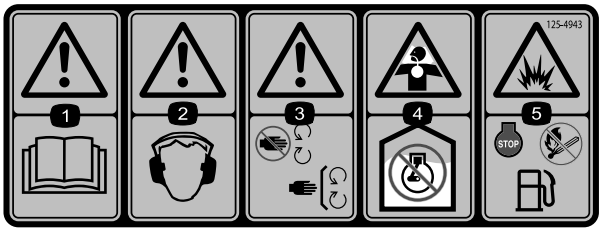


decal125-4943

**125-4943**

1. Warning—read the *Operator's Manual*.
2. Warning—wear hearing protection.
3. Warning—keep away from moving parts; keep all guards and shields in place.
4. Choking hazard—do not operate the machine indoors.
5. Explosion hazard—shut off the engine and extinguish all flames before refueling the machine.

# Setup

## Installing the Handle

Secure each side of the handle to the plate compactor frame using a bolt, flat washer, spacer, bearing, and locknut (Figure 3 or Figure 4).

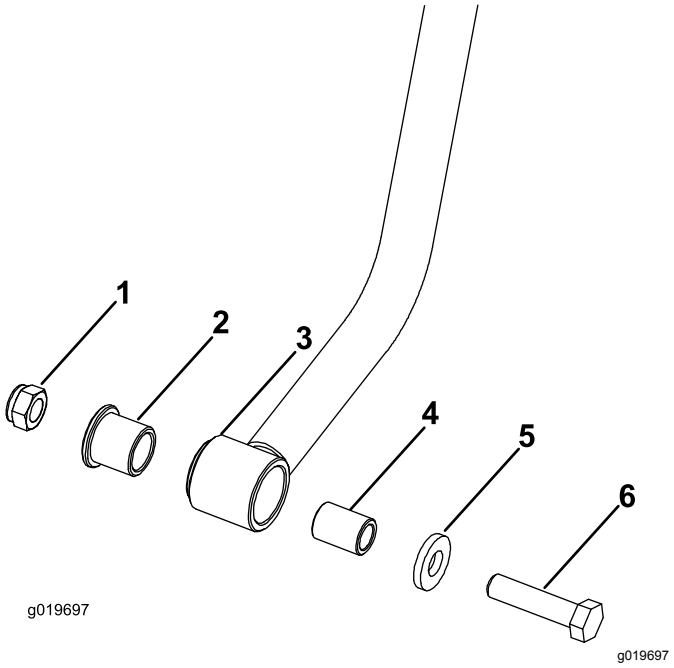


**Figure 3**
Model 2200

1. Locknut
2. Bearing
3. Handle
4. Spacer
5. Flat washer
6. Bolt

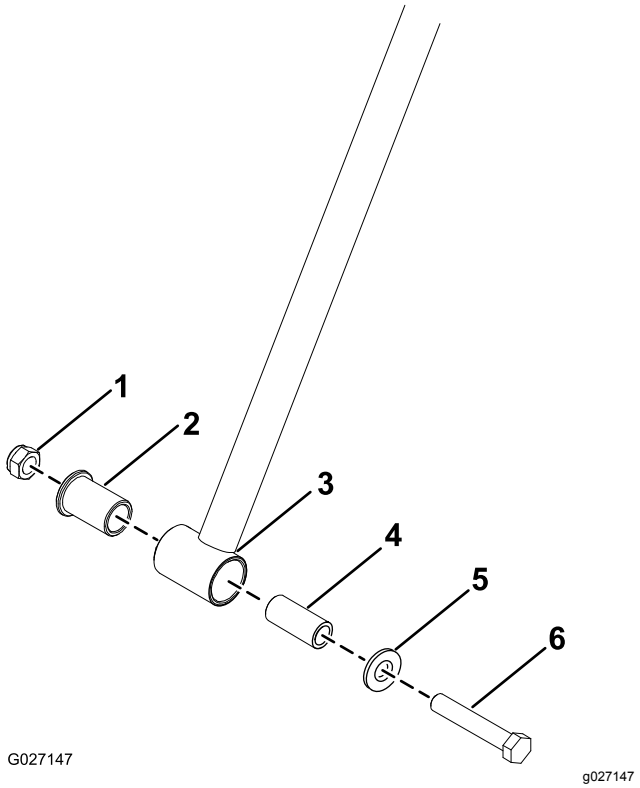


**Figure 4**
Model 3000/4000

1. Locknut
2. Bearing
3. Handle
4. Spacer
5. Flat washer
6. Bolt

## Checking the Engine-Oil Level

The machine comes from the factory with oil in the engine crankcase; however, it may be necessary to add oil; refer to Checking the Engine-Oil Level (page 7). Add only enough oil to raise the level to the Full mark on the dipstick.

## Checking the Eccentric-Oil Level

The machine comes from the factory with eccentric oil in the eccentric housing; however, it may be necessary to add oil; refer to Servicing the Eccentric Oil (page 17). Add only enough oil so that the oil level is flush with the oil plug on the side of the eccentric housing.

# Product Overview

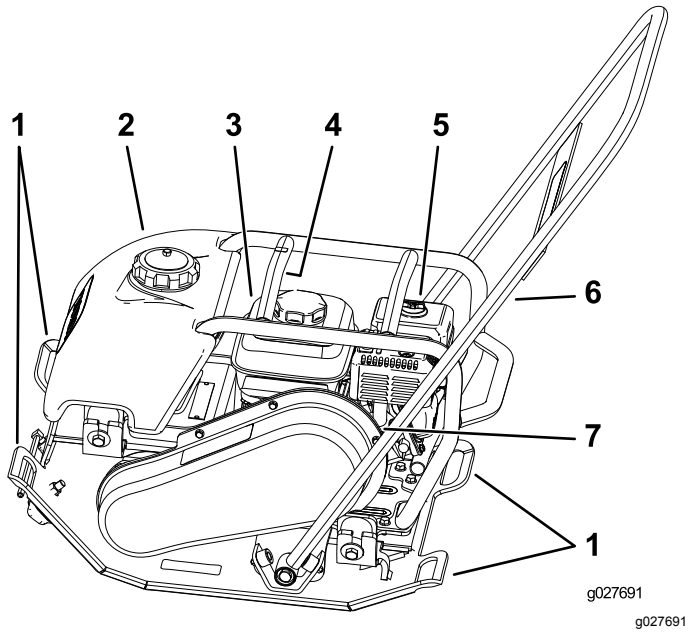


**Figure 5**

1. Lift handles
2. Water tank
3. Engine
4. Rollcage lifteye
5. Air filter
6. Handle
7. Belt cover

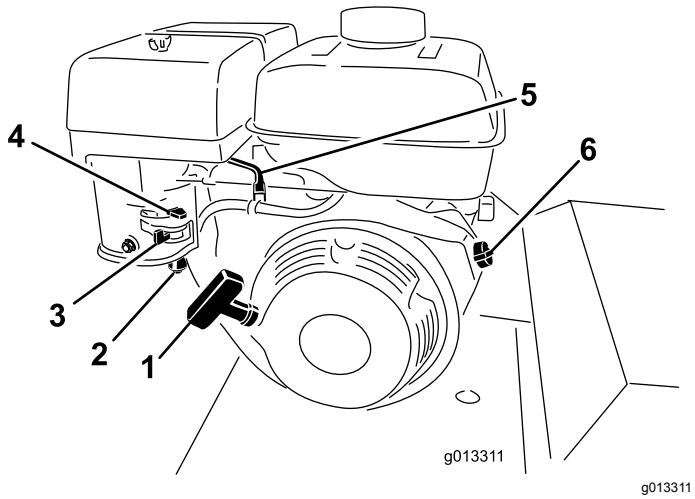


**Figure 6**

1. Recoil starter
2. Sediment cup
3. Fuel-shutoff valve
4. Choke lever
5. Throttle lever
6. Engine On/Off switch

# Operation

**Note:** Determine the left and right sides of the machine from the normal operating position.

## Checking the Engine-Oil Level

**Service Interval:** Before each use or daily

**Oil crankcase capacity:**

- 0.56 L (0.59 US qt) for Model **68025**
- 0.58 L (0.61 US qt) for Models **68026 and 68027**

1. Position the machine on a level surface.
2. Set the throttle to slow, shut off the engine, and wait for all moving parts to stop.
3. Clean around the dipstick so that dirt cannot fall into the filler hole and damage the engine (Figure 7).

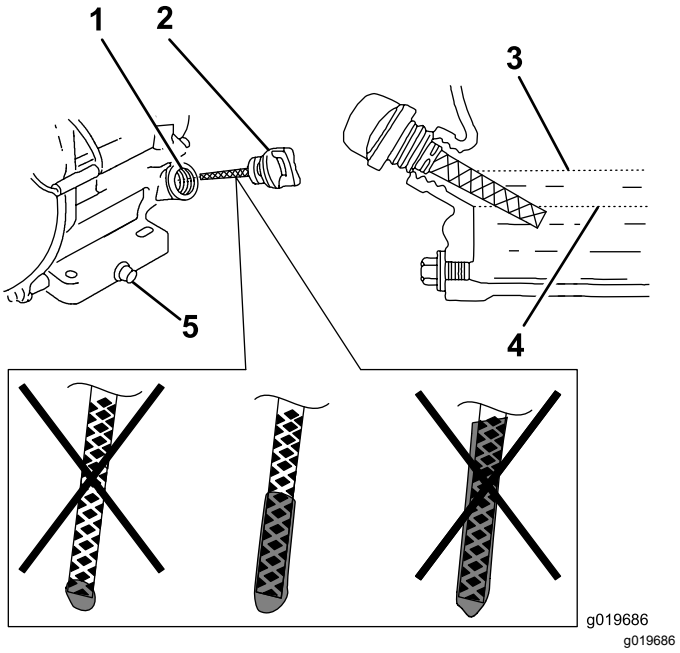


**Figure 7**

1. Filler tube
2. Dipstick
3. Upper limit
4. Lower limit
5. Oil-drain bolt

4. Remove the dipstick and wipe the end clean.
5. Slide the dipstick fully into the dipstick tube without threading it into the filler neck.
6. Pull the dipstick out and inspect the end.

   **Note:** The oil should be level with the upper-limit mark (Figure 7).

***Important:*** **Running the engine with a low oil level can cause engine damage. This type of damage is not covered by warranty.**

**The engine is equipped with an oil alert system that will automatically shut off the engine before the oil level falls below the safe limit.**

7. If the oil level is low, slowly pour only enough oil into the crankcase to raise the level to the upper limit.

   ***Important:*** **Do not overfill the crankcase with oil, because the engine may be damaged.**

8. Install and secure the dipstick.

# Cleaning Debris from the Machine

**Service Interval:** Before each use or daily

1. Set the throttle to slow, shut off the engine, and wait for all moving parts to stop.

   **⚠ WARNING**

   **Contact with hot parts on the machine can cause severe burns.**

   **Wait for all parts to cool before touching the machine.**

2. Brush dirt and debris away from the air cleaner and engine openings.
3. Check the sprinkler manifold (Figure 10) and remove any dirt or debris.

# Adding Fuel

- For best results, use only clean, fresh (less than 30 days old), unleaded gasoline with an octane rating of 87 or higher ((R+M)/2 rating method).
- **Ethanol**: Gasoline with up to 10% ethanol (gasohol) or 15% MTBE (methyl tertiary butyl ether) by volume is acceptable. Ethanol and MTBE are not the same. Gasoline with 15% ethanol (E15) by volume is not approved for use. **Never use gasoline that contains more than 10% ethanol by volume**, such as E15 (contains 15% ethanol), E20 (contains 20% ethanol), or E85 (contains up to 85% ethanol ). Using unapproved gasoline may cause performance problems and/or engine damage which may not be covered under warranty.
- **Do not** use gasoline containing methanol.
- **Do not** store fuel either in the fuel tank or fuel containers over the winter unless a fuel stabilizer is used.
- **Do not** add oil to gasoline.

**⚠ DANGER**

**In certain conditions, fuel is extremely flammable and highly explosive. A fire or explosion from fuel can burn you and others and can damage property.**

- **Fill the fuel tank outdoors, in an open area, when the engine is cold. Wipe up any fuel that spills.**
- **Never fill the fuel tank inside an enclosed trailer.**
- **Do not fill the fuel tank completely full. Add fuel to the fuel tank until the level is 6 to 13 mm (1/4 to 1/2 inch) below the bottom of the filler neck. This empty space in the tank allows fuel to expand.**
- **Never smoke when handling fuel, and stay away from an open flame or where fuel fumes may be ignited by a spark.**
- **Store fuel in an approved container and keep it out of the reach of children. Never buy more than a 30-day supply of fuel.**
- **Do not operate without entire exhaust system in place and in proper working condition.**

**⚠ DANGER**

**In certain conditions during fueling, static electricity can be released causing a spark which can ignite the fuel vapors. A fire or explosion from fuel can burn you and others and can damage property.**

- **Always place fuel containers on the ground away from your vehicle before filling.**
- **Do not fill fuel containers inside a vehicle or on a truck or trailer bed because interior carpets or plastic truck bed liners may insulate the container and slow the loss of any static charge.**
- **When practical, remove gas-powered equipment from the truck or trailer and refuel the equipment with its wheels on the ground.**
- **If this is not possible, then refuel such equipment on a truck or trailer from a portable container, rather than from a fuel dispenser nozzle.**
- **If you must use a fuel dispenser nozzle, keep the nozzle in contact with the rim of the fuel tank or container opening at all times until fueling is complete.**

**⚠ WARNING**

**Fuel is harmful or fatal if swallowed. Long-term exposure to vapors can cause serious injury and illness.**

- **Avoid prolonged breathing of vapors.**
- **Keep face away from nozzle and gas tank or conditioner bottle opening.**
- **Avoid contact with skin; wash off spills with soap and water.**

## Using Stabilizer/Conditioner

Use a fuel stabilizer/conditioner in the machine to provide the following benefits:

- Keeps fuel fresh during storage of 90 days or less. For longer storage it is recommended that the fuel tank be drained.
- Cleans the engine while it runs
- Eliminates gum-like varnish buildup in the fuel system, which causes hard starting

***Important:*** **Do not use fuel additives containing methanol or ethanol.**

Add the correct amount of gas stabilizer/conditioner to the gas.

**Note:** A fuel stabilizer/conditioner is most effective when mixed with fresh fuel. To minimize the chance of varnish deposits in the fuel system, use fuel stabilizer at all times.

## Filling the Fuel Tank

1. Set the throttle to slow, shut off the engine, and wait for all moving parts to stop.
2. Allow the engine to cool.
3. Clean around the fuel tank cap and remove it (Figure 8).

   **Note:** The cap is tethered to the fuel tank.

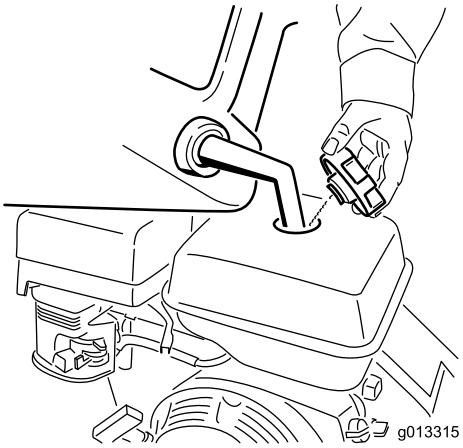


g013315

**Figure 8**

4. Add unleaded fuel to the fuel tank until the level is just inside the mesh filter basket.

   ***Important:*** **This space in the tank allows fuel to expand. Do not fill the fuel tank completely full.**
5. Install the fuel tank cap securely.
6. Wipe up any spilled fuel.

# Compacting Asphalt

When using the machine on asphalt, the water system is used to wet the surface of the compactor to prevent the asphalt from sticking to the compactor.

## Adding Water with the Tank Installed

1. Remove the cap from the water tank (Figure 9).

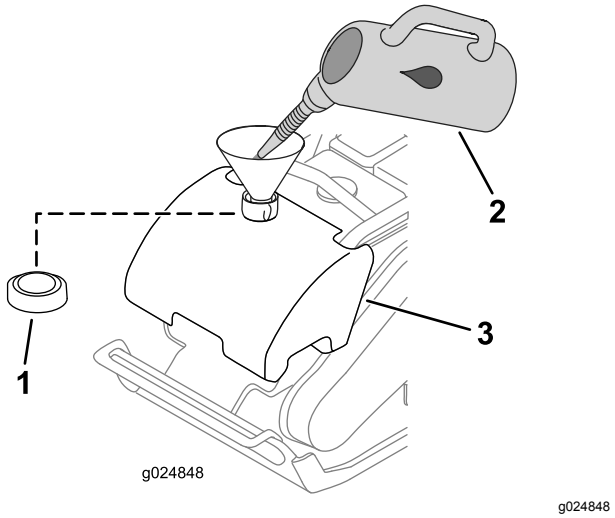


**Figure 9**

1. Water-tank cap
2. Water
3. Water tank

2. Fill the tank with water (Figure 9).
3. Install the cap onto the water tank (Figure 9).

## Adding Water with the Tank Removed

1. Detach the valve coupler (Figure 10).

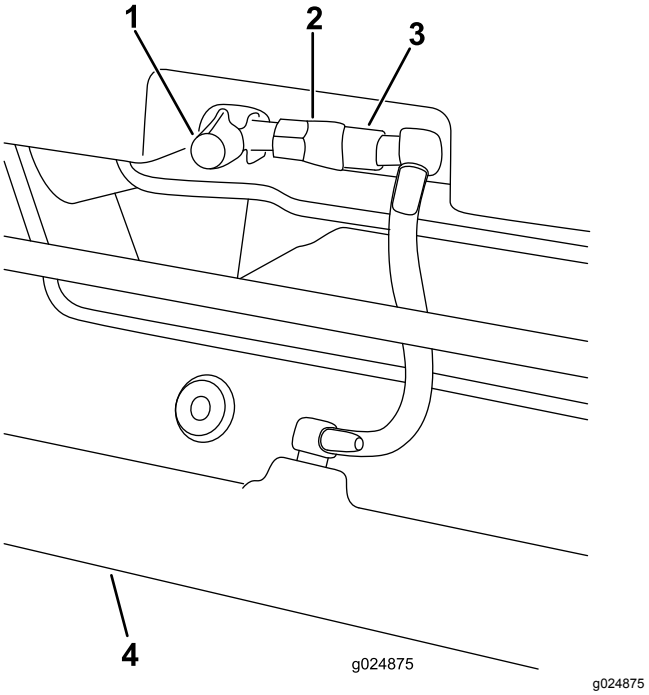


**Figure 10**

1. Shutoff valve
2. Female coupler
3. Male coupler
4. Sprinkler manifold

2. Remove the water tank from the frame by pulling up on the elastic tank latch (Figure 11).

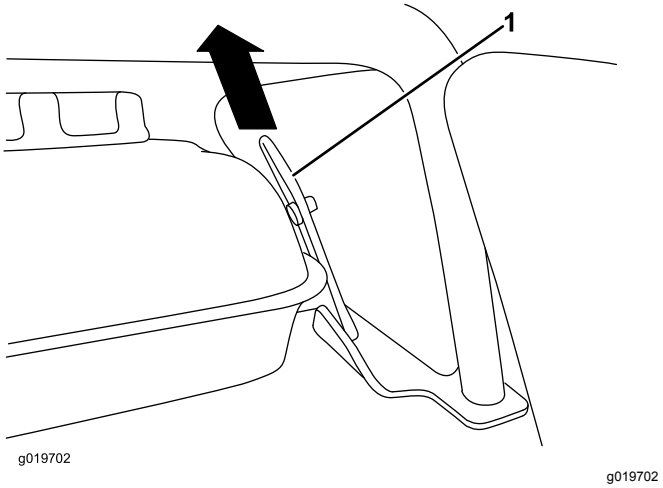


**Figure 11**

1. Elastic tank latch

3. Fill the tank with water, assemble it to the frame, and attach the coupler.

# Starting the Engine

1. Move the engine switch to the ON position (Figure 12).

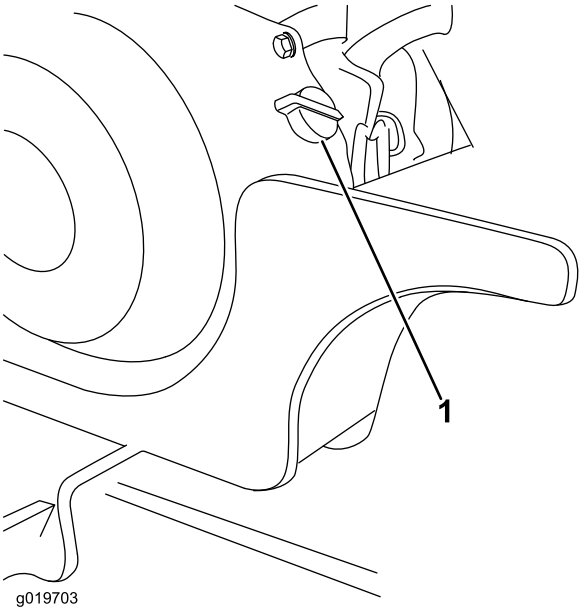


g019703

**Figure 12**

1. Engine switch

2. Move the fuel valve to the ON position (Figure 13).

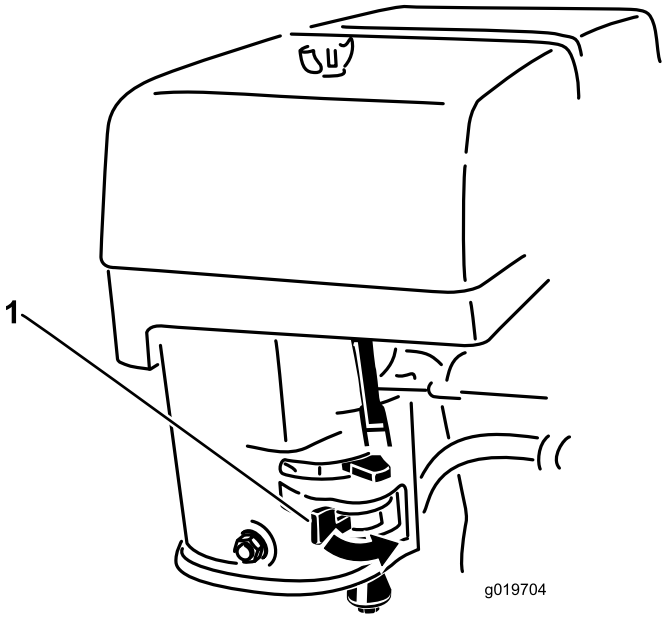


g019704

**Figure 13**

1. Fuel valve

3. Move the choke lever to the left if you are starting a cold engine (Figure 14).

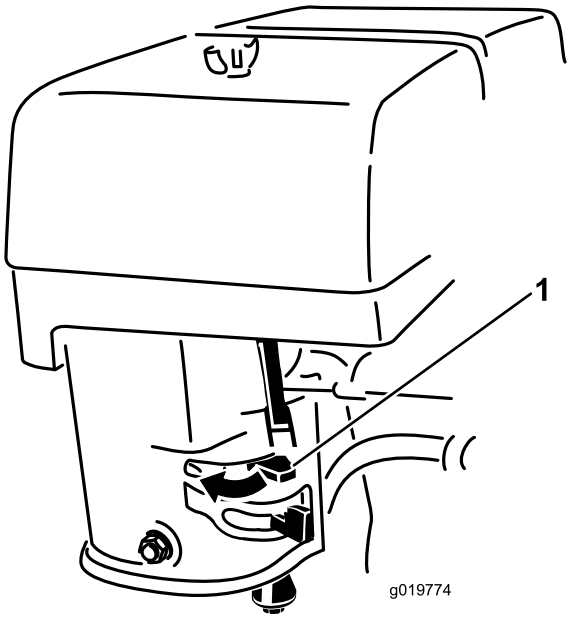


g019774

**Figure 14**

1. Choke

4. Move the throttle lever midway between the SLOW (turtle) and FAST (rabbit) positions (Figure 15).

   **Note:** A warm or hot engine may not require choking.

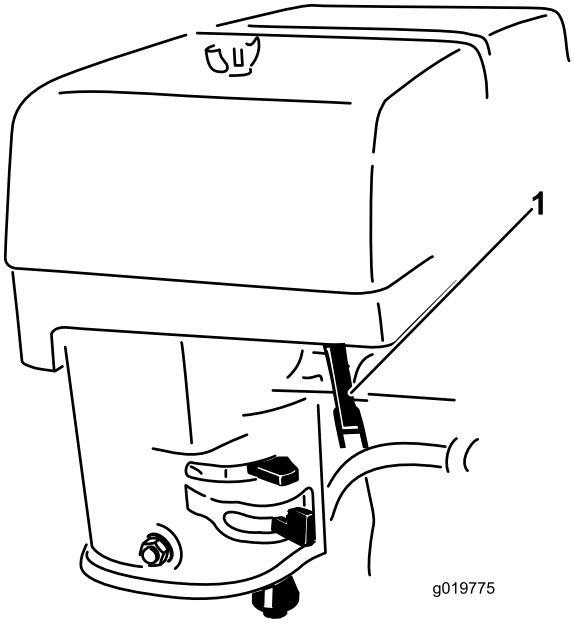


g019775

**Figure 15**

1. Throttle

5. Pull the recoil handle sharply to start the engine.
6. After the engine starts, gradually move the choke to the right.

***Important:*** **If the engine stalls or hesitates, move the choke left again until the engine warms up.**

7. Move the throttle lever to maximum throttle.

# Shutting Off the Engine

1. Move the throttle lever to the SLOW (turtle) position.
2. Turn the engine switch and fuel valve off.

# Operating the Compactor

With the engine at full throttle, the compactor moves forward while vibrating.

Grasp the handle lightly with both hands and allow the compactor to move forward on its own. Use the handle to guide the direction of travel to avoid obstructions.

# Transporting the Machine

Model 68025 weighs 64 kg (140 lb)

Model 68026 weighs 93 kg (205 lb)

Model 68027 weighs 98 kg (215 lb)

You can use the rollcage lifteye to lift and transport the machine with straps or a crane (Figure 16).

Alternatively, 2 people can transport the machine by lifting the compactor using the front and rear lift handles (Figure 16).

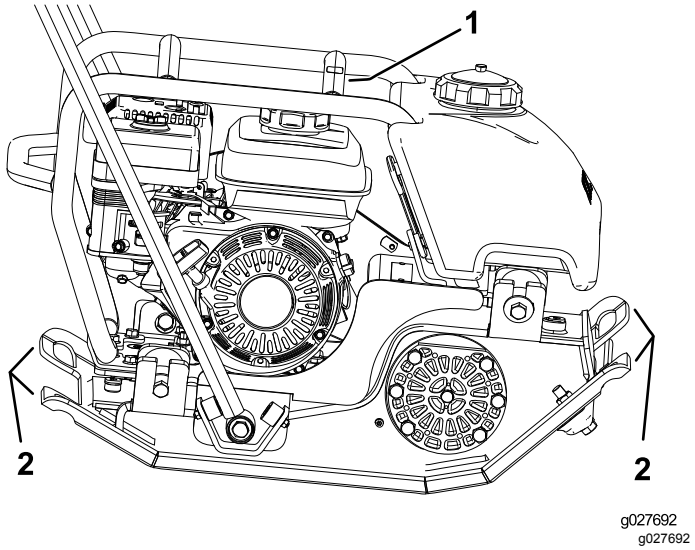


**Figure 16**

1. Rollcage lifteye
2. Lift handles

# Maintenance

## Recommended Maintenance Schedule(s)

| Maintenance Service Interval | Maintenance Procedure |
|---|---|
| After the first 25 hours | • Change the engine oil. |
| Before each use or daily | • Check the engine-oil level.<br>• Clean debris from the air cleaner.<br>• Inspect the air-cleaner elements. |
| Every 50 hours | • Clean the air-filter elements. Clean them more frequently in dusty operating conditions. |
| Every 100 hours | • Inspect, clean, and adjust the spark plug; replace it if necessary.<br>• Clean the sediment cup.<br>• Change the engine oil.<br>• Check the belt tension. Adjust the belt tension if necessary. |
| Every 200 hours | • Replace the spark plug. |
| Every 300 hours | • Replace the paper air-cleaner element. Replace it more frequently in dusty operating conditions.<br>• Change the eccentric oil. |
| Monthly | • Check the eccentric-oil level. |

## Disconnecting the Spark-Plug Wire

Before performing any maintenance on the engine, disconnect the spark-plug wire from the spark plug (Figure 17).

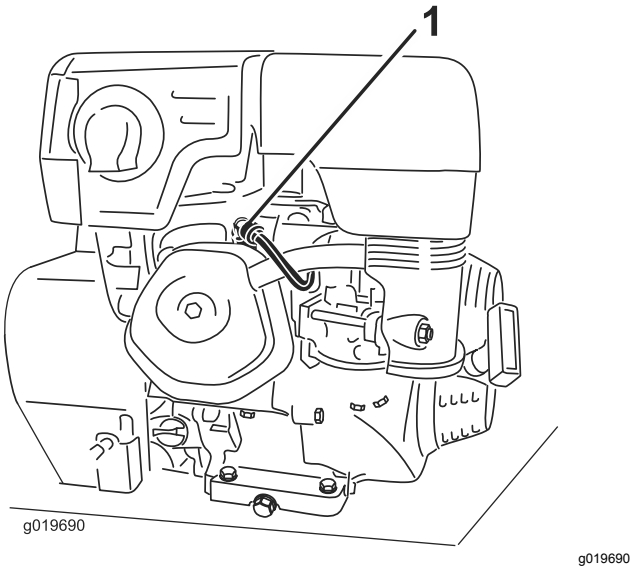


**Figure 17**

1. Spark-plug wire

## Engine Maintenance

### Servicing the Spark Plug

**Service Interval:** Every 100 hours—Inspect, clean, and adjust the spark plug; replace it if necessary.

Every 200 hours—Replace the spark plug.

Use an **NGK BPR6ES** spark plug or equivalent.

1. Shut off the engine and wait for all moving parts to stop.
2. Disconnect the wire from the spark plug.
3. Clean around the spark plug.
4. Remove the spark plug from the cylinder head.

   ***Important:*** **Replace a cracked, fouled, or dirty spark plug. Do not clean the electrodes because grit entering the cylinder can damage the engine.**

5. Set the gap on the plug to 0.76 mm (0.03 inch) as shown in Figure 18.

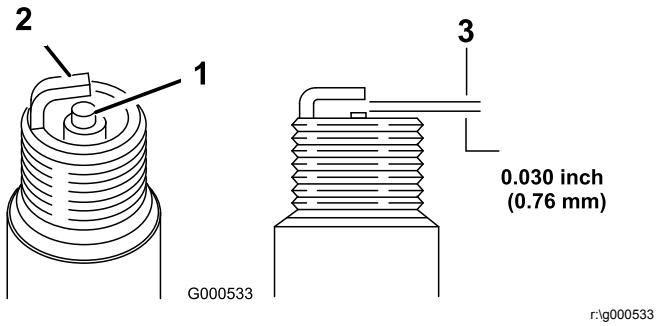


**Figure 18**

1. Center electrode insulator
2. Side electrode
3. Air gap (not to scale)

6. Carefully install the spark plug by hand (to avoid cross threading) until it is hand tight.
7. Tighten the spark plug an additional 1/2 turn if it is new; otherwise, tighten it an additional 1/8 to 1/4 turn.

   ***Important:*** **A loose spark plug can become very hot and can damage the engine; overtightening a spark plug may damage the threads in the cylinder head.**
8. Connect the wire to the spark plug.

# Servicing the Air Cleaner

**Service Interval:** Before each use or daily—Inspect the air-cleaner elements.

Every 50 hours—Clean the air-filter elements. Clean them more frequently in dusty operating conditions.

Every 300 hours/Yearly (whichever comes first)—Replace the paper air-cleaner element. Replace it more frequently in dusty operating conditions.

## Removing the Air Filter

***Important:*** **Do not operate the engine without the air filter assembly; extreme engine damage will occur.**

1. Set the throttle to slow, shut off the engine, and wait for all moving parts to stop.
2. Disconnect the spark-plug wire from the spark plug.
3. Wipe the air filter cover (Figure 19) so that it is clean.

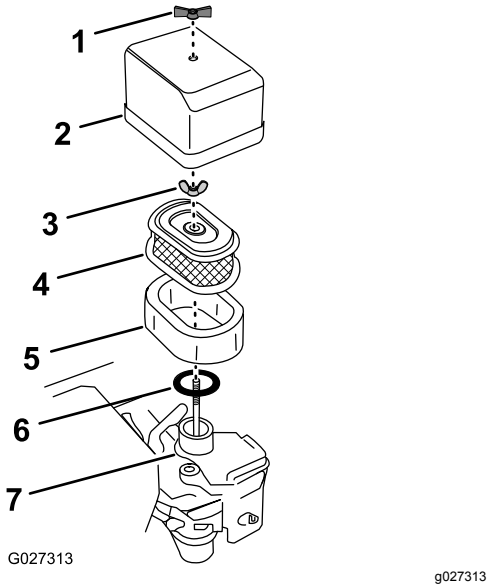


**Figure 19**

1. Wing nut (cover)
2. Air-filter cover
3. Wing nut (filter)
4. Paper filter element
5. Foam filter element
6. Seal (rubber)
7. Carburetor base

4. Remove the wing nut that secures the air-filter cover to the carburetor and remove the cover (Figure 19).

   **Note:** Be careful to prevent dirt and debris from falling into the base.
5. Remove the foam filter element from the paper filter element (Figure 19).
6. Inspect the foam element for damage.

   **Note:** If the foam filter element is damaged, replace it. If the foam element is dirty, clean it; refer to Cleaning the Foam Filter (page 14).
7. Remove the wing nut that secures the paper filter element to the carburetor (Figure 19).
8. Remove the paper element and inspect the paper filter element for damage and excessive amounts of dirt in the element.

   **Note:** Replace the paper filter element if it is damaged or excessively dirty.

   **Note:** Never try to clean the paper element; only replace it.

## Cleaning the Foam Filter

1. Clean the foam filter element in warm soapy water and rinse the element in clean water, or clean the foam filter element in a **nonflammable** solvent.

   **Note:** Do not use fuel to clean the foam element because it could create a risk of fire or explosion.

2. Allow the foam filter element to completely dry.
3. Dip the foam element in clean engine oil, then squeeze out the excess oil.

   **Note:** If too much oil is left in the foam element when the engine is started, the engine will smoke. Excess oil in the foam element may also restrict the air flow through the element and may reach the paper filter and clog it.
4. Assemble the foam element onto the paper filter element (Figure 19).

### Installing the Air Filter

1. Wipe clean the dirt from the carburetor base and the inside of the cover with a moist rag (Figure 19).

   **Note:** Do not allow dirt and debris to enter the air duct leading into the carburetor.
2. Ensure that the rubber gasket is aligned and seated onto the mounting base of the carburetor (Figure 19).

   **Note:** The rubber gasket might stick to the bottom of the old paper filter element. Remove it from the old paper element and install it onto the carburetor.
3. Align the paper filter element with the carburetor and ensure that the hold-down rod of the carburetor passes through the top plate of the filter (Figure 19).
4. Secure the filter to the carburetor with the filter wing nut and tighten it finger tight (Figure 19).
5. Align the air-filter cover over the air filter elements with the hold-down rod of the carburetor passing through the top cover (Figure 19).
6. Secure the cover to the engine with the cover wing nut and tighten it finger tight (Figure 19).

## Cleaning the Sediment Cup

**Service Interval:** Every 100 hours/Every 6 months (whichever comes first)

**⚠ DANGER**

**In certain conditions, fuel is extremely flammable and highly explosive. A fire or explosion from fuel can burn you and others and can damage property.**

- **Set the throttle to slow, shut off the engine and keep heat, sparks, and flame away.**
- **Handle fuel only outdoors.**
- **Wipe up spills immediately.**
- **Do not smoke while handling fuel.**

1. Shut off the engine and wait for all moving parts to stop.
2. Disconnect the wire from the spark plug.
3. Move the fuel-shutoff valve to the OFF position.
4. Remove the sediment cup and O-ring (Figure 6).

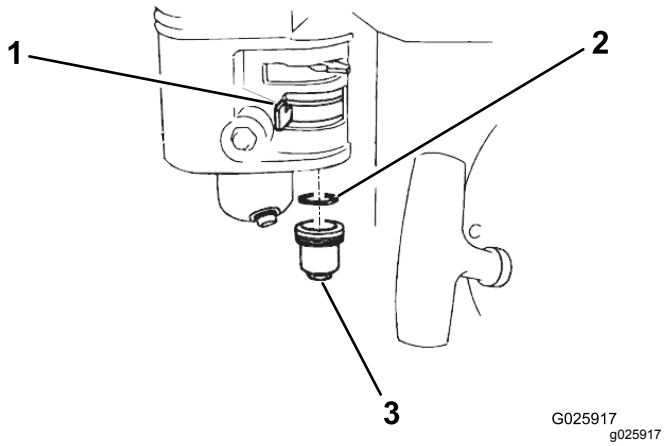


**Figure 20**

1. Fuel-shutoff valve (OFF position shown)
2. O-ring
3. Sediment cup

5. Wash the sediment cup in a nonflammable solvent and dry it thoroughly.
6. Place the O-ring in the fuel valve and install the sediment cup, tightening it securely.
7. Move the fuel-shutoff lever to the On position.

   **Note:** If any fuel leaks, repeat this procedure and replace the O-ring.

# Servicing the Engine Oil

**Oil Type:** Detergent oil (API service SJ or higher)

**Oil crankcase capacity:**

- 0.56 L (0.59 US qt) for Model 68025
- 0.58 L (0.61 US qt) for Models 68026 and 68027

**Viscosity:** See table below

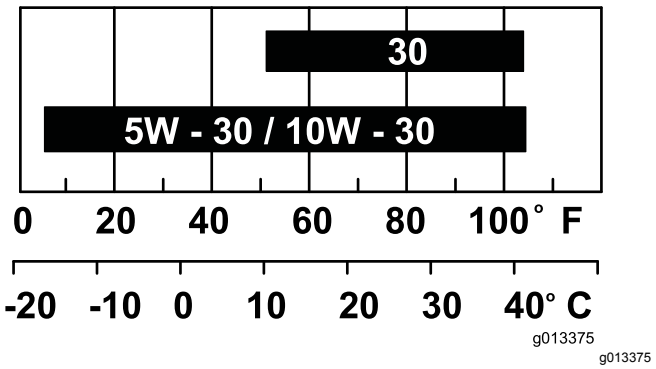


**Figure 21**

## Changing the Engine Oil

**Service Interval:** After the first 25 hours

Every 100 hours

**⚠ WARNING**

**Oil may be hot after the engine has been run, and contact with hot oil can cause severe personal injury.**

**Avoid contacting the hot engine oil when you drain it.**

1. Shut off the engine and wait for all moving parts to stop.
2. Disconnect the wire from the spark plug.
3. Remove the drain plug (Figure 22).

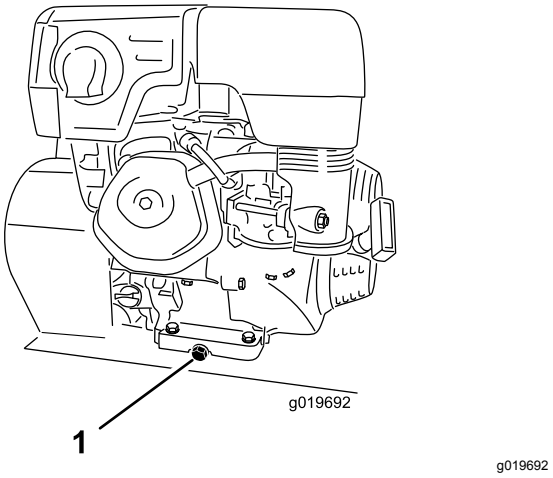


**Figure 22**

1. Drain plug

**Note:** You may have to tip the compactor backwards to drain the oil.

4. When the oil has drained completely, replace the plug.

**Note:** Dispose of the used oil at a certified recycling center.

5. Remove the dipstick (Figure 7) and slowly pour oil into the filler hole until the oil pours out of the filler hole.
6. Replace and secure the dipstick.
7. Wipe up any spilled oil.

# Servicing the Eccentric Oil

**Oil type:** 10W30 (API service SJ or higher)

**Oil capacity:**

- 1.3 L (1.4 US qt) for Model 68025
- 3.3 L (3.5 US qt) for Model 68026
- 3.5 L (3.7 US qt) for Model 68027

## Checking the Eccentric-Oil Level

**Service Interval:** Monthly

1. Set the throttle to slow, shut off the engine, and wait for all moving parts to stop.
2. Place a drain pan under the oil plug and remove the oil-plug screw on the side of the eccentric housing (Figure 23).

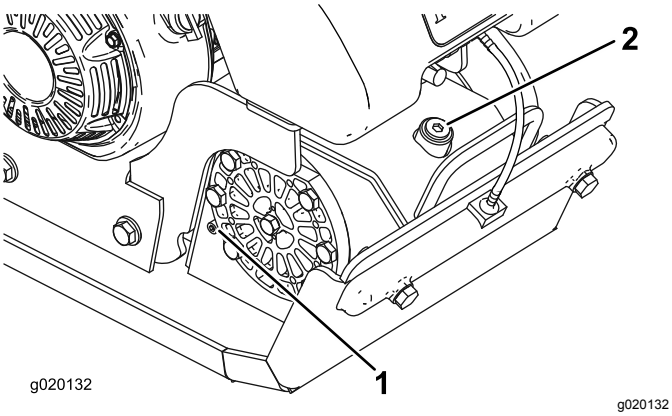


**Figure 23**

1. Oil plug
2. Eccentric-oil-filler hole

3. Verify that the eccentric oil is level with the bolt hole.
4. Wipe up any spilled oil.
5. Replace the oil-plug screw.

## Changing the Eccentric Oil

**Service Interval:** Every 300 hours

1. Set the throttle to slow, shut off the engine, and wait for all moving parts to stop.
2. Place an oil drain pan under the oil plug and remove the fill plug and the oil plug screw (Figure 23).
3. Tip the plate compactor forward slightly and use a suction gun to remove the oil through the filler hole (Figure 23).
4. Slowly pour oil into the filler hole until the oil comes out the oil plug (Figure 23).
5. Wipe up any spilled oil.
6. Replace the fill plug and the oil plug screw.

# Belt Maintenance

## Removing the Belt Cover

1. Remove the flanged-head bolts that secure the belt cover to the engine (Figure 24 or Figure 25).

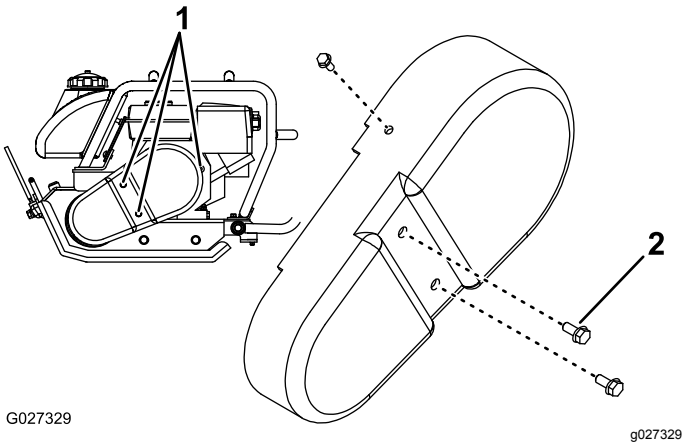


**Figure 24**
Model 2200

1. Bolt locations
2. Flanged-head bolt

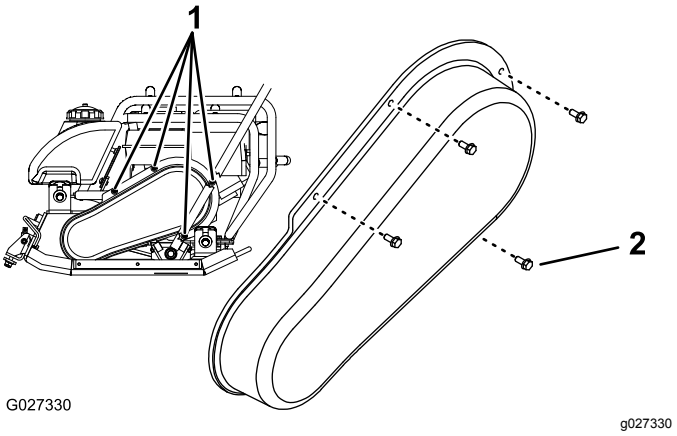


**Figure 25**
Model 3000/4000

1. Bolt locations
2. Flanged-head bolt

2. Remove the belt cover.

## Checking the Belt Tension

**Service Interval:** Every 100 hours

***Important:*** **The best belt tension for the machine is the lowest tension at which the belts do not slip under full power.**

1. Lay a straight edge on the belt and across the pulleys (Figure 26).

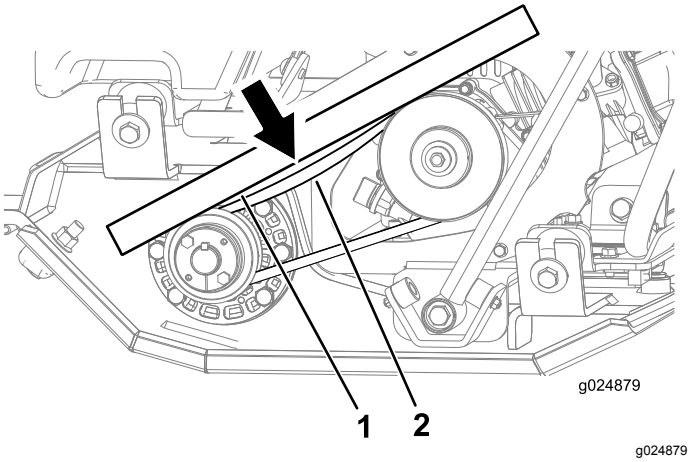


**Figure 26**

1. Straight edge
2. Belt deflected 7.6 mm (0.3 inch) at 1.4 to 2.3 kg (3 to 5 lb) of force

2. With a force gauge, push down on the belt, midway between the pulleys (Figure 26).

   **Note:** The belt should deflect 7.6 mm (0.3 inch) from the straight edge when pushing down on the belt with 1.4 to 2.3 kg (3 to 5 lb) of force (Figure 26).

   **Note:** If the belt tension is too low or too high, adjust the belt tension; refer to Adjusting the Belt Tension (page 19).

## Adjusting the Belt Tension

1. Remove the water tank; refer to Adding Water with the Tank Removed (page 10).
2. Loosen the 2 hex-socket bolts (5/16-24 x 1.75 inches) that secure the front of the engine (Figure 27).

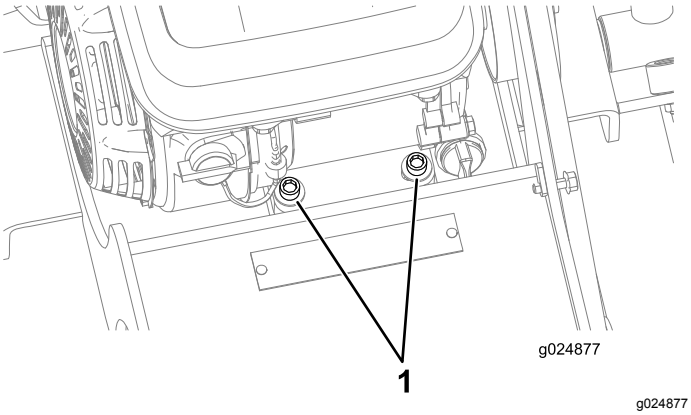


**Figure 27**

1. Hex-socket bolts (5/16-24 x 1.75 inches)

3. Loosen the 2 flange nuts (8 mm) that secure the back of the engine (Figure 28).

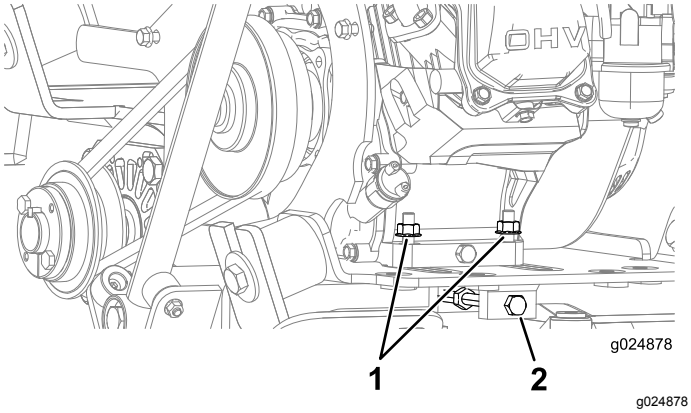


**Figure 28**

1. Flange nuts (8 mm)
2. Belt-tensioning bolt

4. Loosen the jam nut, and rotate the belt-tensioning bolt clockwise to tension the belt, or rotate the belt-tensioning bolt counterclockwise to loosen the tension on the belt (Figure 28).
5. Check the belt tension; refer to Checking the Belt Tension (page 18).
6. When the correct tension is reached, tighten the jam nut on the belt-tensioning bolt.
7. Tighten the 2 hex-socket bolts (5/16-24 x 1-3/4 inches) that secure the front of the engine to 12.5 to 16.4 N·m (9.2 to 12.1 ft-lb) as shown in Figure 27.
8. Tighten the 2 flange nuts (8 mm) that secure the back of the engine to 23 to 29 N·m (17 to 21 ft-lb) as shown in Figure 28.
9. Apply medium-grade thread-locking compound to the threads of the flanged-head bolts that you removed in step 1 of Removing the Belt Cover (page 18).
10. Align the belt cover to the machine and secure the cover with the flanged-head bolts that you removed in step 1 of Removing the Belt Cover (page 18).
11. Torque the bolts to 972 to 1198 N·cm (86 to 106 in-lb).

# Storage

1. Shut off the engine and disconnect the spark-plug wire from the spark plug.
2. Remove dirt and grime from the entire machine.

   ***Important:*** **You can wash the machine with mild detergent and water. Do not pressure wash the machine. Avoid excessive use of water, especially near the engine.**
3. Service the air cleaner; refer to Servicing the Air Cleaner (page 14).
4. Change the engine oil; refer to Changing the Engine Oil (page 16).
5. For storage over 30 days, prepare the unit as follows:

   A. Add a petroleum-based fuel stabilizer/conditioner to fuel in the tank. Follow mixing instructions from stabilizer manufacturer (1 fl oz per gallon). **Do not use an alcohol-based stabilizer (ethanol or methanol).**

      **Note:** A fuel stabilizer/conditioner is most effective when mixed with fresh fuel and used at all times.

   B. Run the engine until it stops from running out of fuel.

   C. Choke the engine.

   D. Start and run the engine until it does not start again.

   E. Dispose of fuel properly. Recycle as per local codes.

   ***Important:*** **Do not store stabilizer/conditioned fuel over 90 days.**
6. Check and tighten all bolts, nuts, and screws. Repair or replace any part that is damaged.
7. Paint all scratched or bare metal surfaces. Paint is available from your Authorized Service Dealer.
8. Store the machine in a clean, dry garage or storage area.
9. Cover the machine to protect it and keep it clean.

# Troubleshooting

| Problem | Possible Cause | Corrective Action |
|---|---|---|
| The engine does not start, starts hard, or fails to keep running. | 1. The fuel tank is empty.<br>2. The spark plug is pitted, fouled, or the gap is incorrect.<br>3. The air cleaner is dirty. | 1. Fill the fuel tank with fuel.<br>2. Install a new, correctly gapped spark plug.<br>3. Clean or replace the air cleaner elements. |
| The plate does not vibrate at full speed. | 1. The oil level in the eccentric housing is too high.<br>2. The belt is loose. | 1. Check the oil level and drain as necessary.<br>2. Adust the belt tension. |
| The clutch is extremely hot. | 1. A foreign object is lodged against the eccentric sheave.<br>2. The oil level in the eccentric housing is too high.<br>3. The clutch has slipped.<br>4. Engine is not reaching full speed. | 1. Remove the obstruction.<br>2. Check the oil level and drain as necessary.<br>3. Adjust the carburetor.<br>4. Adjust the throttle so the engine runs at 3,400 rpm. |
| The plate does not vibrate when the engine is running. | 1. The belt is broken.<br>2. The clutch is broken or worn out.<br>3. The eccentric has seized. | 1. Replace the belt.<br>2. Replace the clutch.<br>3. Ensure the eccentric is free turning. |
| There is insufficient water flow. | 1. The water tank is empty.<br>2. The sprinkler is closed.<br>3. The sprinkler manifold is clogged. | 1. Fill the water tank.<br>2. Open the sprinkler valve.<br>3. Remove and clean the manifold. |

# Notes:

# Notes:

# California Proposition 65 Warning Information

## What is this warning?

You may see a product for sale that has a warning label like the following:

**WARNING:** Cancer and Reproductive Harm—www.p65Warnings.ca.gov.

## What is Prop 65?

Prop 65 applies to any company operating in California, selling products in California, or manufacturing products that may be sold in or brought into California. It mandates that the Governor of California maintain and publish a list of chemicals known to cause cancer, birth defects, and/or other reproductive harm. The list, which is updated annually, includes hundreds of chemicals found in many everyday items. The purpose of Prop 65 is to inform the public about exposure to these chemicals.

Prop 65 does not ban the sale of products containing these chemicals but instead requires warnings on any product, product packaging, or literature with the product. Moreover, a Prop 65 warning does not mean that a product is in violation of any product safety standards or requirements. In fact, the California government has clarified that a Prop 65 warning "is not the same as a regulatory decision that a product is 'safe' or 'unsafe.'" Many of these chemicals have been used in everyday products for years without documented harm. For more information, go to https://oag.ca.gov/prop65/faqs-view-all.

A Prop 65 warning means that a company has either (1) evaluated the exposure and has concluded that it exceeds the "no significant risk level"; or (2) has chosen to provide a warning based on its understanding about the presence of a listed chemical without attempting to evaluate the exposure.

## Does this law apply everywhere?

Prop 65 warnings are required under California law only. These warnings are seen throughout California in a wide range of settings, including but not limited to restaurants, grocery stores, hotels, schools, and hospitals, and on a wide variety of products Additionally, some online and mail order retailers provide Prop 65 warnings on their websites or in catalogs.

## How do the California warnings compare to federal limits?

Prop 65 standards are often more stringent than federal and international standards. There are various substances that require a Prop 65 warning at levels that are far lower than federal action limits. For example, the Prop 65 standard for warnings for lead is 0.5 µg/day, which is well below the federal and international standards.

## Why don't all similar products carry the warning?

- Products sold in California require Prop 65 labelling while similar products sold elsewhere do not.
- A company involved in a Prop 65 lawsuit reaching a settlement may be required to use Prop 65 warnings for its products, but other companies making similar products may have no such requirement.
- The enforcement of Prop 65 is inconsistent.
- Companies may elect not to provide warnings because they conclude that they are not required to do so under Prop 65; a lack of warnings for a product does not mean that the product is free of listed chemicals at similar levels.

## Why does Toro include this warning?

Toro has chosen to provide consumer with as much information as possible so that they can make informed decisions about the products they buy and use. Toro provides warnings in certain cases based on its knowledge of the presence of one or more listed chemicals without evaluating the level of exposure, as not all the listed chemical provide exposure limit requirements. While the exposure from Toro products may be negligible or well within the "no significant risk" range, out of an abundance of caution, Toro has elected to provide the Prop 65 warnings. Moreover, if Toro does not provide these warnings, it could be sued by the State of California or by private parties seeking to enforce Prop 65 and subject to substantial penalties.