FORM NO. 3321–846

TORO®

MODEL NO. 30578

INSTALLATION INSTRUCTIONS

# TRACTOR SHIELD KIT
## For Groundsmaster® 200 Series

## INSTALL SHIELD ASSEMBLY

**1.** Thread a jam nut onto front (longer) mounting pin.

**2.** Secure mounting pin to under side of traction unit floor plate with a hex nut.

**3.** From front of machine, slide shield assembly under traction unit.

**4.** Secure front of shield to mounting pin with a flat washer and (2) hair pin cotters.

**5.** Pivot rear of shield assembly, centering each rear slot with center of each side frame channel bottom edge.

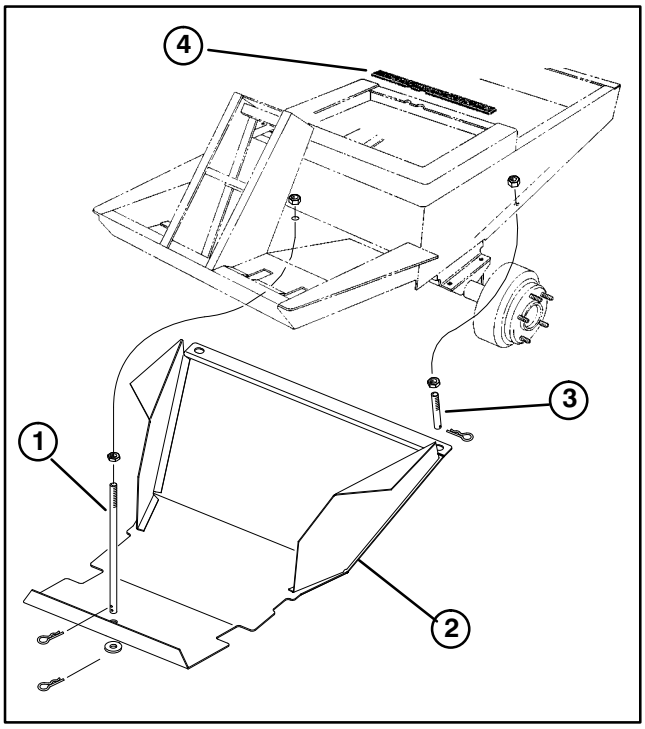


**Figure 1**

1. Front mounting pin
2. Shield assembly
3. Rear mounting pin(s)
4. Foam seal

**Note:** On 4 wheel drive traction units, shield assembly must be modified to allow clearance for drive shaft. Locate, mark and cut a 3" X 6" notch in rear of shield assembly (Fig. 2).

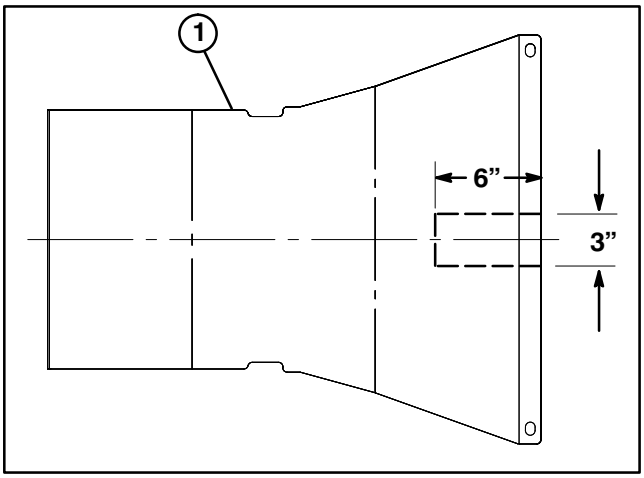


**Figure 2**

1. Shield assembly

**6.** Using shield assembly as a template, locate, mark and drill a .531" dia. hole in each side frame channel.

**7.** Thread a jam nut onto each rear (shorter) mounting pin.

**8.** Using holes previously drilled, secure a mounting pin to each frame channel with a hex nut as shown in figure 1. Adjust jam nuts so shield fits snugly against frame channels.

**9.** Pivot rear of shield assembly upward onto mounting pins. Secure each side with a hair pin cotter.

## INSTALL FOAM SEAL

**1.** Raise seat, peel backing off foam seal and secure seal to rear of seat frame. Make sure notches in seal and frame are aligned.

© The TORO Company – 1998