FORM NO. 3322–114

TORO

MODEL NO. 04381–90001 & UP

OPERATOR'S MANUAL

GREENSMASTER® 3200–D
TRACTION UNIT

To assure maximum safety, optimum performance, and to gain knowledge of the product, it is essential that you or any other operator of the machine read and understand the contents of this manual before the engine is ever started. Pay particular attention to the SAFETY INSTRUCTIONS highlighted by this symbol –

The safety alert symbol means CAUTION, WARNING or DANGER – personal safety instruction. Failure to comply with the instruction may result in personal injury.

TORO
THIS UNIT CONFORMS TO ANSI B71.4–1990

The GREENSMASTER 3200–D conforms to the American National Standards Institute's safety standards for riding mowers when 45 lbs. of ballast is added to rear wheel.



©The Toro Company — 1998

FOREWORD

The GREENSMASTER® 3200−D was developed to provide an efficient, trouble free and time−saving method of mowing high quality turf on the finest greens. The latest concepts in engineering, design and safety have been incorporated into this machine along with the highest quality parts and workmanship. Excellent service will be derived if proper operation and maintenance practices are followed.

We know, since you have purchased the industry leader in mowing excellence, that future performance and dependability are of prime importance. TORO also is concerned about future use of the machine and of safety to the user. Therefore, this manual should be read by you and those involved with the GREENSMASTER 3200−D to make sure that safety, proper set−up, operation and maintenance procedures are followed at all times. The major sections of the manual are:

1. Safety Instructions
2. Set−up Instructions
3. Before Operating
4. Operation
5. Maintenance

Safety, mechanical and some general information in this manual is emphasized. DANGER, WARNING and CAUTION identify safety messages. Whenever the triangular safety symbol appears, it is followed by a safety message that must be read and understood. For more details concerning safety, read the safety instructions on pages 3,4 and 5. IMPORTANT identifies special mechanical information and NOTE identifies general information worthy of special attention.

⚠ WARNING: ⚠

Diesel engine exhaust and some of its constituents are known to the State of California to cause cancer, birth defects, or other reproductive harm.

OPTIONAL SPARK ARRESTER

In some areas there are local, state or federal regulations requiring that a spark arrester be used on the engine of this mower. If a spark arrester is required, order the following part from your local TORO Distributor:

Spark Arrester − Part No. 94−8157

The parts are approved by the United States Department of Agriculture and the United States Forest Service.

When mower is used or operated on any California forest, brush or grass covered land, a working order spark arrester must be attached to muffler. If not, the operator is violating state law, Section 442 Public Resources Code.

If help concerning set−up, operation, maintenance or safety is ever needed, contact the local Authorized TORO Distributor In addition to genuine TORO replacement parts, the distributor also has optional equipment for the complete line of TORO turf care equipment. Keep your Toro all TORO. Buy genuine TORO parts and accessories.

TABLE OF CONTENTS

	Page
SAFETY INSTRUCTIONS	3–5
SAFETY AND INSTRUCTION DECALS	6
SPECIFICATIONS	7
LOOSE PARTS	8
SET UP INSTRUCTIONS	9
Install Front Wheels	9
Install Rear Wheel	9
Mount Seat	9
Activate and Charge Battery	9
Install Steering Wheel	10
Install Control Lever Knob	10
Install Breather Extension & Reservoir Cap	10
Adjust Carrier Frame Rollers	10
Install Cutting Units	11
BEFORE OPERATING	12
Check Engine Oil	12
Fill Fuel Tank	13
Check Cooling System	13
Check Hydraulic System Fluid	14
Inspect Fuel Filter	15
Check Tire Pressure	15
Check Reel to Bedknife Contact	15
Check Torque of Wheel Nuts	15
CONTROLS	16
OPERATING INSTRUCTIONS	18
Break–In Period	18
Starting Instructions	18
Bleeding Fuel System	18
Check Interlock System Operation	19
Preparing Machine For Mowing	19
Training Period	20
Before Mowing	20
Mowing Procedures	20
Transport Operation	21
Inspection and Clean–up After Mowing	21
Towing Traction Unit	21
SERVICE INTERVAL CHART	22
DAILY MAINTENANCE CHECKLIST	23
LUBRICATION	24
MAINTENANCE	25
General Air Cleaner Maintenance	25
Servicing Air Cleaner	25
Cleaning Radiator and Screen	25
Changing Engine Oil and Filter	26
Replacing Fuel Filter	26
Changing Hydraulic Oil and Filter	26
Checking Hydraulic Lines and Hoses	27
Brake Adjustment	27
Adjusting Transmission For Neutral	27
Adjusting Transport Speed	28
Adjusting Mowing Speed	28
Adjusting Cutting Unit lift/Drop	28
Belt Adjustments	28
Adjust Valve Clearance	29
Torque Cylinder Head Bolts	29
Battery Care	29
Battery Storage	29
Fuses	30
ELECTRICAL SCHEMATIC	31
HYDRAULIC SCHEMATIC	32
MAINTENANCE SCHEDULE	33
IDENTIFICATION AND ORDERING	34
NOTES	35
THE TORO PROMISE	Back Cover

SAFETY INSTRUCTIONS

The safety alert symbol means CAUTION, WARNING or DANGER — "personal safety instruction". Read and under stand the instruction because it has to do with safety. Failure to comply with the instruction may result in personal injury.

Hazard control and accident prevention are dependent upon the awareness, concern, and proper training of the personnel involved in the operation, transport, maintenance, and storage of the machine. Improper use or maintenance of the machine can result in injury or death. To reduce the potential for injury or death, comply with the following safety instructions.

BEFORE OPERATING

1. Read and understand the contents of this Operator's Manual before starting and operating the machine. Become familiar with all controls and know how to stop quickly. A replacement manual is available by sending complete Model and Serial Number to:

The Toro Company
8111 Lyndale Avenue South
Minneapolis, Minnesota 55420−1196

2. Never allow children to operate the machine or adults to operate it without proper instructions.

3. Become familiar with the controls and know how to stop the engine quickly.

4. Keep all shields, safety devices and decals in place. If a shield, safety device or decal is defective or damaged, repair or replace it before operating the machine.

5. Always wear substantial shoes. Do not operate machine while wearing sandals, tennis shoes or sneakers. Do not wear loose fitting clothing because it could get caught in moving parts and possibly cause personal injury.

6. Wearing safety glasses, safety shoes, long pants and a helmet is advisable and required by some local ordinances and insurance regulations.

7. Make sure work area is clear of objects which might be picked up and thrown by the reels.

8. Do not carry passengers on the machine, and keep everyone, especially children and pets, away from the areas of operation.

9. Since diesel fuel is highly flammable, handle it carefully.

A. Use an approved fuel container.

B. Do not remove cap from fuel tank when engine is hot or running. Remove cap slowly.

C. Do not smoke while handling fuel.

D. Fill fuel tank outdoors and only to bottom of filler neck. DO NOT OVERFILL.

E. Wipe up any spilled fuel.

WHILE OPERATING

10. Do not run the engine in a confined area without adequate ventilation. Exhaust fumes are hazardous and could be deadly.

11. Sit on the seat when starting and operating the machine.

12. Check the safety interlock switches daily for proper operation; refer to page 18. If a switch should fail, replace the switch before operating the machine. **(After every two years, replace all three interlock switches in the safety system, regardless if they are working properly or not.)**

13. To start the engine:

A. Sit on the seat, make sure cutting units are disengaged.

B. Verify that functional control lever is in neutral.

C. Verify that parking brake is set.

D. Proceed to start engine.

14. Using the machine demands attention, and to prevent loss of control:

A. Mow only in daylight or when there is good artificial light.

B. Watch for holes or other hidden hazards.

C. Do not drive close to sand traps, ditches, creeks or other hazards.

D. Reduce speed when making sharp turns. Avoid sudden stops and starts.

E. Before backing up, look to the rear to be sure no one is behind the machine.

F. Watch out for traffic when near or crossing roads. Always yield the right−of−way.

G. Apply the service brakes when going downhill to keep forward speed slow and to maintain control of the machine.

15. Keep hands, feet and clothing away from moving parts and the reel discharge area. The grass baskets must be in place during operation of the reels or thatchers for maximum safety. Shut the engine off before emptying the baskets.

16. This product may exceed noise levels of 85 dB(A) at the operator position. Ear protectors are recommended, for prolonged exposure, to reduce the potential of permanent hearing damage.

17. Raise the cutting units when driving from one work area to another.

18. Do not touch engine, muffler or exhaust pipe while engine is running or soon after it is stopped because these areas could be hot enough to cause burns.

SAFETY INSTRUCTIONS

19. If a cutting unit strikes a solid object or vibrates abnormally, stop immediately, turn engine off, wait for all motion to stop and inspect for damage. A damaged reel or bedknife must be repaired or replaced before operation is continued.

20. Before getting off the seat:

A. Make sure cutting units are disengaged.

B. Verify that functional control system is in neutral.

C. Set the parking brake.

D. Stop the engine and remove key from ignition switch.

21. Traverse slopes carefully. Do not start or stop suddenly when traveling uphill or downhill.

22. Operator must be skilled and trained in how to drive on hillsides. Avoid wet slopes. Failure to use caution on slopes or hills may cause loss of control and vehicle to tip or roll possibly resulting in personal injury or death.

23. If engine stalls or loses headway and cannot make it to the top of a slope, do not turn machine around. Always back slowly straight down the slope.

24. DON'T TAKE AN INJURY RISK! When a person or pet appears unexpectedly in or near the mowing area, **STOP MOWING.** Careless operation, combined with terrain angles, ricochets, or improperly positioned guards can lead to thrown object injuries. Do not resume mowing until area is cleared.

25. Whenever machine is left unattended, make sure cutting units are fully raised and reels are not spinning, key is removed from ignition switch and parking brake is set.

MAINTENANCE

26. Before servicing or making adjustments to the machine, stop the engine, remove key from switch to prevent accidental starting of the engine.

27. Be sure entire machine is in good operating condition. Keep all nuts, bolts, screws and hydraulic fittings tight.

28. Make sure all hydraulic line connectors are tight,and all hydraulic hoses and lines are in good condition before applying pressure to the system.

29. Keep body and hands away from pin hole leaks or nozzles that eject hydraulic fluid under high pressure. Use paper or cardboard, not hands, to search for leaks. Hydraulic fluid escaping under pressure can have sufficient force to penetrate skin and do serious damage. If fluid is ejected into the skin it must be surgically removed within a few hours by a doctor familiar with this form of injury or gangrene may result.

30. Before disconnecting or performing any work on the hydraulic system, all pressure in system must be relieved by stopping engine and lowering cutting units and attachments to the ground.

31. To reduce potential fire hazard, keep the engine area free of excessive grease, grass, leaves and accumulation of dirt. Never wash a warm engine or electrical connections with water.

32. Check all fuel lines for tightness and wear on a regular basis, and tighten or repair as needed.

33. If the engine must be running to perform a maintenance adjustment, keep hands, feet, clothing and any other parts of the body away from the cutting units, attachments and any moving parts. Keep everyone away.

34. Do not overspeed the engine by changing governor settings. To assure safety and accuracy, have an Authorized Toro Distributor check maximum engine speed with a tachometer. Maximum governed engine speed should be 3025 $\pm$50 RPM.

35. Engine must be shut off before checking oil or adding oil to the crankcase.

36. If major repairs are ever needed or if assistance is desired, contact an Authorized Toro Distributor.

37. At the time of manufacture, the GREENSMASTER 3200−D conformed to safety standards in effect for riding mowers. To make sure of optimum performance and continued safety certification of the machine, use genuine TORO replacement parts and accessories. Replacement parts and accessories made by other manufacturers could be dangerous, and such use could void the product warranty of The Toro Company.

SOUND PRESSURE LEVEL

This unit has an equivalent continuous A-weighted sound pressure at the operator ear of: 81 dB(A), based on measurements of identical machines per Directive 84/538/EEC and amendments.

VIBRATION LEVEL

Hand-Arm

This unit does not exceed a vibration level of 2.5 m/s^2 at the hands based on measurements of identical machines per ISO 5349 procedures.

Whole Body

This unit does not exceed a vibration level of 0.5 m/s^2 at the posterior based on measurements of identical machines per ISO 2631 procedures.

SAFETY AND INSTRUCTION DECALS

The following safety and instruction decals are installed on the traction unit. If any become damaged or illegible, replace them. Decal part numbers are listed below and in your Parts Catalog. Order replacements from your Authorized Toro Distributor.

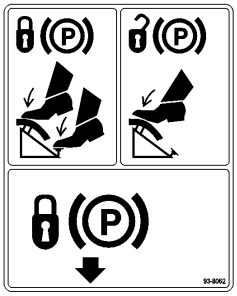

On Floor Plate
(Part No. 93−8062)

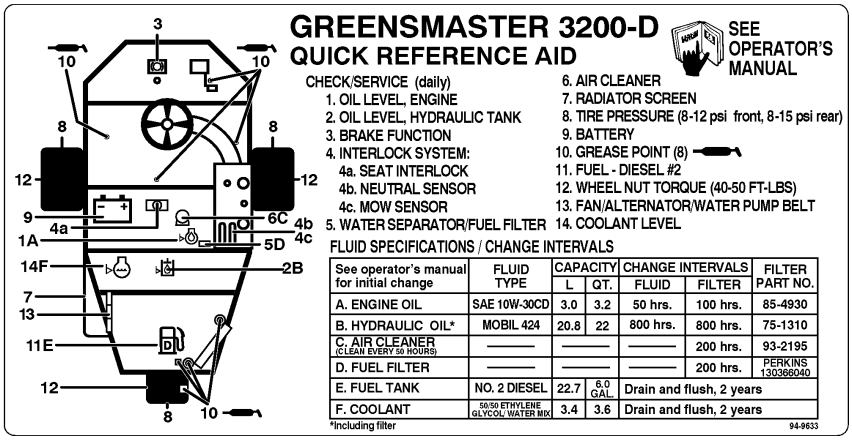

On Seat Back
(Part No. 94−9633)

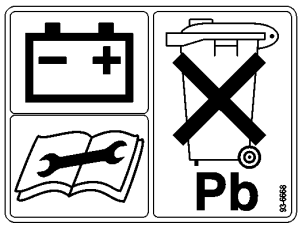

On Battery Base
(Part No. 93−6668)

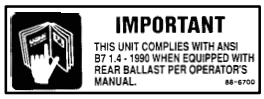

On Frame Cross Tube
(Part No. 88−6700)

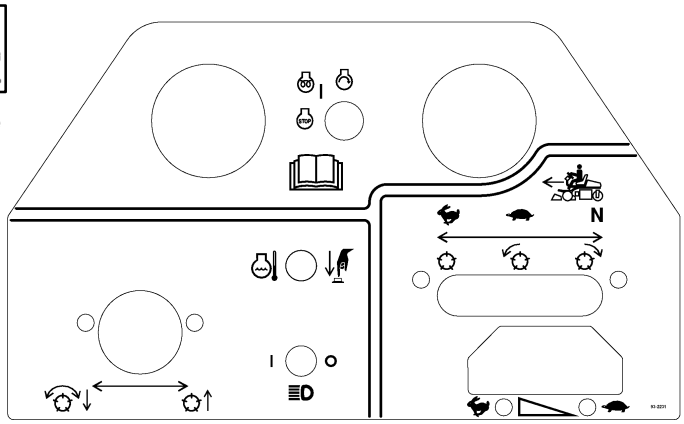

On Control Panel
(Part No. 93−2231)

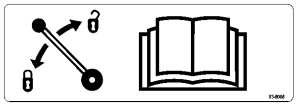

On Steering Arm
(Part No. 93−8068)

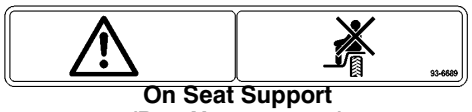

On Seat Support
(Part No. 93−6689)

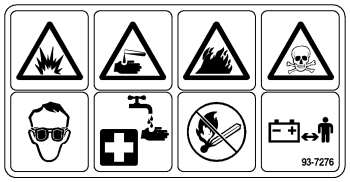

On Battery
(Part No. 93−7276)



On Muffler Shield
(Part No. 93−8069)

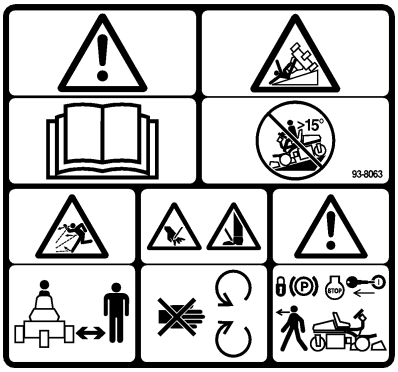

On Steering Cover
(Part No. 93−8063)

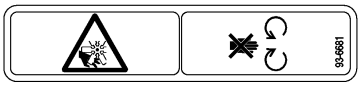

On Radiator Support
(Part No. 93−6681)



On Radiator Cap
(Part No. 93−7840)

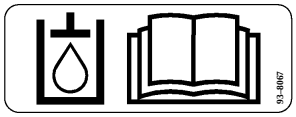

On Seat Back
(Part No. 93−8067)



On Neutral Adjustment Weldment
(Part No. 93−9051)



On Carrier Frames
(Part No. 93−8064)

SPECIFICATIONS

Configuration: Tricycle vehicle with two front wheels providing drive and one rear wheel providing steering. Operator sits in center over #1 cutting unit with #2 and #3 cutting units in front of vehicle.

Certification: Certified to meet ANSI specification B7 1.4−1 990 and European CE standards.

Engine: Perkins 103−07 three cylinder water cooled engine. 41.3 cu. in. (676 cc) Full pressure lubrication, oil filter. 17.0 hp at 3600 rpm, 13.2 hp at 2600 rpm. Engine governed to 3025 ±50 rpm high idle, 1500 ±50 rpm low idle (no load).

Frame: Welded steel tube construction in an "A" frame configuration.

Air Cleaner: Donaldson Corp. heavy duty remote air cleaner.

Steering: Power steering. Danfoss open center, non−load reacting steering valve with power beyond for raise/lower circuit and Hydrostat charge circuit. 13" round steering wheel. No−tool quick adjust steering arm position, with arm motion allowing a wide range of operator sizes. Steering cylinder has a 1.50 inch bore x 6.25 stroke with through shaft design for accurate straight line steering.

Fuel Capacity: 6 gallons (22.7 liters) capacity, diesel.

Hydraulic Oil Capacity: 5.5 gallon (20.8 liter) nylon oil reservoir. Mobile 424 standard, Mobile EAL 224H approved. Hydraulic oil filter has 5 micron long life filtration of circuit.

Traction Drive: Hydrostatic piston pump, closed loop system. Foot pedal forward and reverse; infinitely variable. Two front wheel orbit motors, 10.3 in.3/rev displacement.

Ground Speed: Forward − mowing speed is variable from 2 to 5 mph (3.2 to 8 km/h), adjusted by stop on pedal mechanism. Mow speed setting does not affect transport speed. Maximum transport speed is 8.1 mph (13 km/h), may be reduced by adjusting stop in footrest pan without affecting mow speeds. Reverse is 2.5 mph (4.0 km/h).

Turf Compaction Pressure: 10 psi average at recommended minimum tire pressures, with a 200 lb. operator and cutting units down.

Tires: Three 18 x 9.50 x 8, 2 ply pneumatic tubeless demountable and interchangeable. Smooth tread.

Tire pressure: 8−12 psi front
8−15 psi rear

Brakes: 6" drum type mechanical with rack and pawl lock for parking.

Cutting Unit Drive: Hydraulic drive; one .50 in.3/ rev gear pump section powers three reel motors in series. Manifold block with cartridge valves controls flow, electrical on/off. Reel motors have .73in3/ rev displacement, low pressure case drains, and Toro exclusive "twist−mount" partial flange cut−away for fast installation.

Clip: Dependent on mowing ground speed, reel rpm, and number of reel blades. Mowing ground speed is easily changed by adjusting the pedal mow stop (this will not affect transport speed). Increasing ground speed will increase clip length and decrease cuts per meter. In general, the quality of cut will be best when clip and HOC are nearly equal.

Cutting Unit Suspension: Cutting units are completely free floating, each attaching to the traction unit by a single low pull point and lifted by a centered lift arm. Baskets are supported by carrier frames that are suspended off the ground by adjustable stops in the tractor frame weldment. Cutting unit floatation is unaffected by basket content.

Electrical Features: Maintenance free 12 volt battery with 530 cold cranking amps at 0 degrees F. and 85 minutes reserve capacity at 85 degrees F. 27 amp alternator, circuit fused at 40 amps. Ignition switch/key. Seat switch. High temperature engine kill override switch. Harness terminals. fuse slot, and console switch location available for optional lights installation.

Controls/Gauges: Hand operated throttle, raise/lower−mow lever, and functional control (neutral, mow, transport) lever. Foot operated traction drive brakes. Hour meter and 4 bulb warning cluster.

Interlocks:
Traction pedal locks when functional control lever is in neutral.
Engine cranking requires functional control lever in neutral, operator does not have to be in seat.
Engine will shut off if operator leaves seat without functional control lever in neutral.
Reels turning forward requires operator in seat, functional control lever in mow and raise/lower/mow control momentarily engaged.
Reels turning backward for backlap requires optional variable reel speed kit installed. Then the reels are allowed to turn backwards when the functional control lever in neutral and the backlap switch is closed, showing reel direction is reversed.

Seat: Contour seat with high backrest. 7 inch fore/aft slider adjustment with two mounting positions allowing 9 inch total seat travel. Operator manual tube mounted on the seat back for easy access.

SPECIFICATIONS

General Specifications:

Width of Cut:	59.0 in. (150 cm)
Wheel Tread:	49.9 in. (127 cm)
Wheel Base:	47.6 in. (121 cm)
Overall Length (w/baskets)	92.4 in. (235 cm)
Overall Width:	68.0 in. (173 cm)
Overall Height:	50.5 in. (128 cm)
Weight w/reels (8 Blade 4 Bolt):	1,358 lbs. (616 kg)

Optional Equipment:

8 Blade, 4 Bolt Cutting Unit	Model No. 04480
11 Blade, 4 Bolt Cutting Unit	Model No. 04481
8 Blade, SPA Cutting Unit	Model No. 04482
11 Blade, SPA Cutting Unit	Model No. 04483
Thatching Reels	Model No. 04493
Spiker	Model No. 04494
Tri−Roller	Model No. 04495
Turf Guardian Leak Detector	Model No. 04497
Backlap/Reel Speed Kit	Model No. 04498
Oil Cooler Kit	Model No. 04499
Three Wheel Drive Kit	Model No. 04550
ROPS	Model No. 04552
Light Kit	Model No. 04551
Arm Rests	Model No. 30307
Pull Link Kit	Part No. 94−9630
Spark Arrester	Part No. 94−8157
Hose Adapter Kit	Part No. 94−8190
Tie Down Kit	Part No. 94−6379
Traction Tire	Part No. 231−124

LOOSE PARTS

Description	Qty.	Use
Wheel Nuts Wheels	8 2	Mount Front Wheels
Wheel Wheel Bolt Locknut Spacers	1 1 1 2	Mount Rear Wheel
Seat Hex Nut 5/16 − 18	1 4	Mount Seat to Seat Base
Control Knob	1	Mount to Control Lever
Steering Wheel Cap Screws	1 1 2	Mount Steering Wheel
Gauge Bar Machine Screw #10 − 32 x 5/8” lg. Jam Nut #10	1 1 1	Use to Set Height−of−Cut
Breather Extension	1	Mount to Hydraulic Reservoir
Rubber Pad	3	Mount to Each Cutting Unit Shield
Grass Basket	3	Mounts to Pull Frame
Ignition Keys	2	
Operator’s Manual (Traction Unit)	2	Read Before Operating Machine
Parts Catalog	1	
Registration Card (Traction Unit) Registration Card (Cutting Unit)	1 1	Fill out and return to Toro

Note: Mounting fasteners for GREENSMASTER 3200−D cutting units are included with the cutting units.

SET UP INSTRUCTIONS

INSTALL FRONT WHEELS

1. Mount front wheels and torque mounting nuts to 40−50 ft−lbs.

INSTALL REAR WHEEL (Fig. 1)

1. Remove wheel bolt and locknut from wheel mount holes in rear castor fork.

2. Install rear wheel into castor fork. Insert wheel bolt into one of the castor fork mounting hole, install a spacer (supplied in loose parts) and slide the bolt through the wheel.

3. Install another spacer onto the bolt and route the bolt through the remaining castor fork mounting hole.

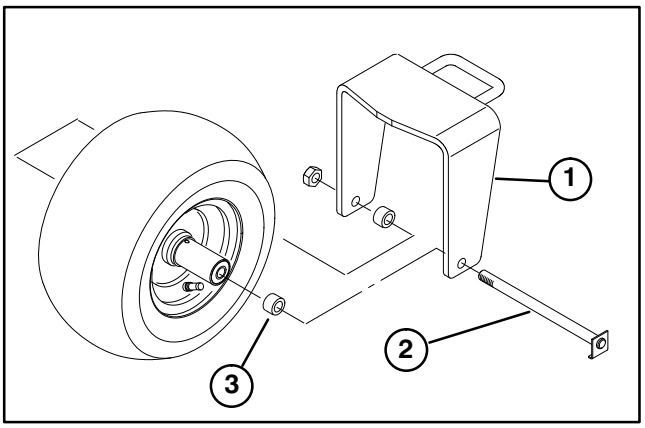

Figure 1
1. Rear castor fork
2. Wheel bolt
3. Spacer (2)

4. Position the bend of the wheel bolt head under the bottom edge of the castor fork. Install and tighten locknut to secure wheel to castor fork. Do not over−tighten locknut as wheel must rotate freely.

5. Wipe grease fitting clean on wheel assembly. Pump grease into wheel hub until grease is seen exiting at both hub bearings. Wipe up excess grease.

MOUNT SEAT (Fig. 2)

Note: Mount seat slides in front set of mounting holes to gain an additional 3" in forward adjustment, or rear mounting holes for an additional 3" in rearward adjustment.

1. Remove locknuts securing seat slides to plywood shipping base. Discard locknuts.

2. Secure seat slides to seat support with (4) 5/16−18 locknuts supplied in loose parts.

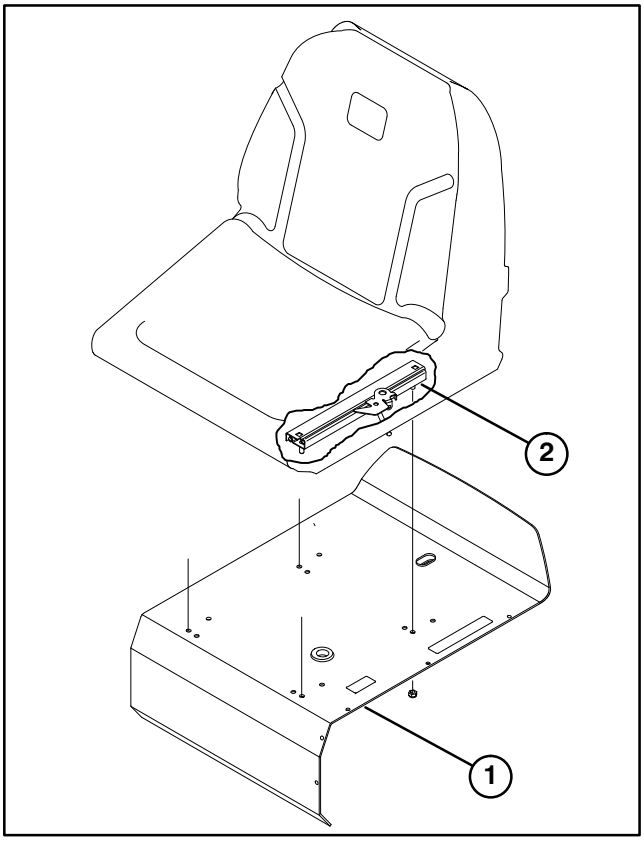

Figure 2
1. Seat support
2. Seat slide

ACTIVATE AND CHARGE BATTERY (Fig. 3)

1. If Battery is not filled with electrolyte or activated, bulk electrolyte with 1.260 specific gravity must be purchased from a local battery supply outlet and added to battery.

CAUTION

Wear safety goggles and rubber gloves when working with electrolyte. Charge the battery in a well ventilated place so gasses produced while charging can dissipate. Since the gases are explosive, keep open flames and electrical spark away from the battery; do not smoke. Nausea may result if the gases are inhaled. Unplug charger from electrical outlet before connecting to or disconnecting charger leads from battery posts.

2. Remove filler caps from battery and slowly fill each cell until electrolyte is just above the plates.

3. Replace filler caps with vents pointing to the rear (toward fuel tank) and connect a 3 to 4 amp battery charger to the battery posts. Charge the battery at a rate of 3 to 4 amperes for 4 to 8 hours.

SET UP INSTRUCTIONS

4. When battery is charged, disconnect charger from electrical outlet and battery posts.

5. Remove filler caps. Slowly add electrolyte to each cell until level is up to fill ring. Install filler caps.

IMPORTANT: **Do not overfill battery. Electrolyte will overflow onto other parts of the machine and severe corrosion and deterioration will result.**

6. Install the positive cable (red) to the positive (+) terminal and the negative cable (black) to the negative (—) terminal of the battery and secure with capscrews and nuts. Slide the rubber boot over the positive terminal to prevent possible short−out from occurring.

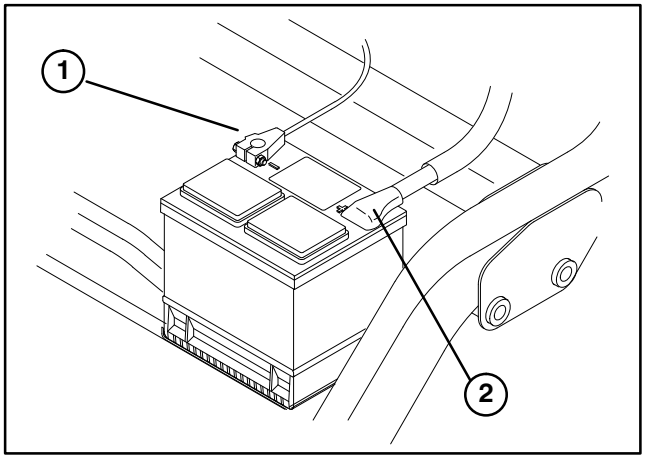

Figure 3
1. Negative (−)
2. Positive (+)

INSTALL STEERING WHEEL (Fig. 4)

1. Slide steering wheel onto steering shaft.

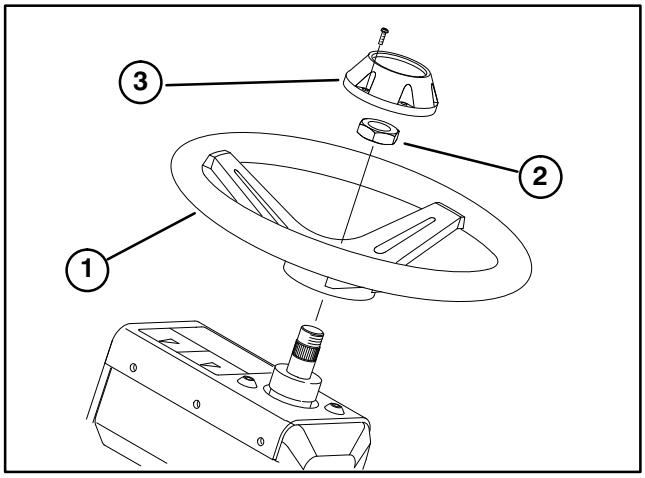

Figure 4
1. Steering Wheel
2. Jam Nut
3. Cap

2. Secure steering wheel to shaft with jam nut and tighten it to 35 ft-lb.

3. Install cap to steering wheel with screws.

INSTALL CONTROL LEVER KNOB (Fig. 5)

1. Thread control knob onto lever.

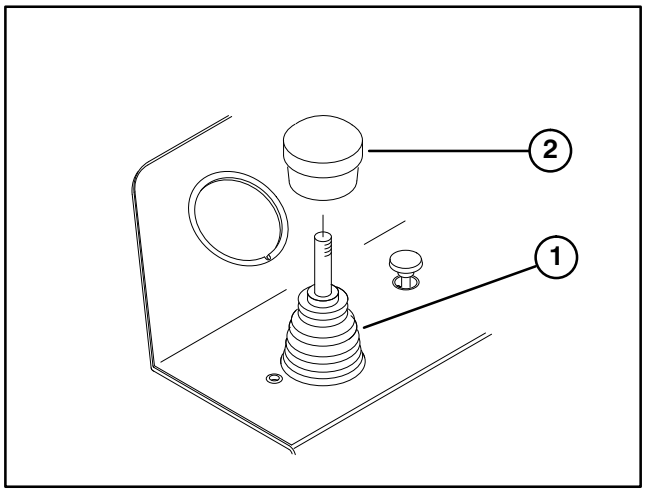

Figure 5
1. Control Lever
2. Control Knob

INSTALL BREATHER EXTENSION & RESERVOIR CAP (Fig. 6)

1. Remove breather cap from hydraulic reservoir.

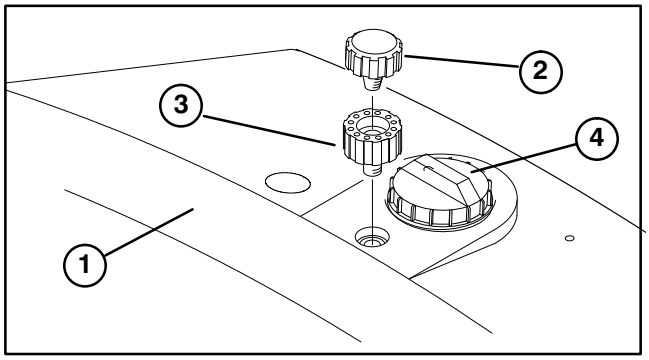

Figure 6
1. Hydraulic Reservoir
2. Breather Cap
3. Breather Extension
4. Reservoir Cap

2. Thread breather extension into reservoir.

3. Thread breather cap into breather extension.

4. Remove and discard shipping cap from hydraulic reservoir. Install cap secured to machine.

ADJUST CARRIER FRAME ROLLERS (Fig. 7)

1. Position traction unit on a level surface and lower cutting unit carrier frames to the floor.

2. Verify that there is 3/8" ± 1/8" clearance between carrier frame rollers and floor.

SET UP INSTRUCTIONS

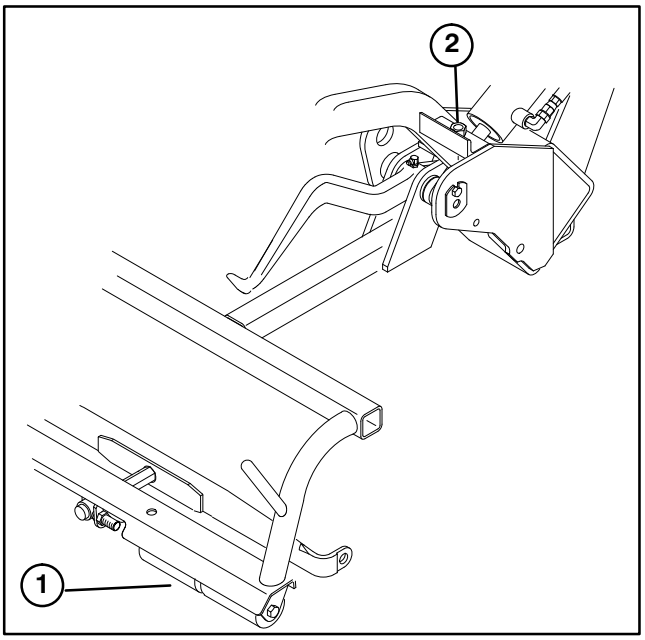

Figure 7
1. Carrier frame roller
2. Stop screw

3. If an adjustment is required, loosen jam nut on carrier frame stop screw and rotate screw up or down to raise or lower carrier frame. Tighten jam nut after adjustment is attained.

INSTALL CUTTING UNITS (Fig. 8–10)

Note: When sharpening, setting height–of–cut, or performing other maintenance procedures on the cutting units, store the cutting unit reel motors in support tubes on front of frame to prevent damage to the hoses.

1. Remove cutting units from cartons. Assemble and adjust per the Operator's Manual for the cutting units. Use the Height Gauge bar from Loose Parts Kit to adjust height of cut.

Note: All cutting units are shipped with the counter weight mounted to left end and drive coupler mounted in the right end of cutting unit. To mount the cutting unit in the right front position, on a GR 3200, proceed as follows:

A. Remove (2) capscrews and lockwashers securing counter weight to left end of cutting unit. Remove counter weight (Fig. 8, inset).

B. Remove snap ring securing drive coupler in right bearing housing. Remove drive coupler.

C. Apply grease to I.D. of drive coupler. Install drive coupler to left end of cutting unit with snap ring.

D. Install counter weight to right end of cutting unit with capscrews and lockwashers.

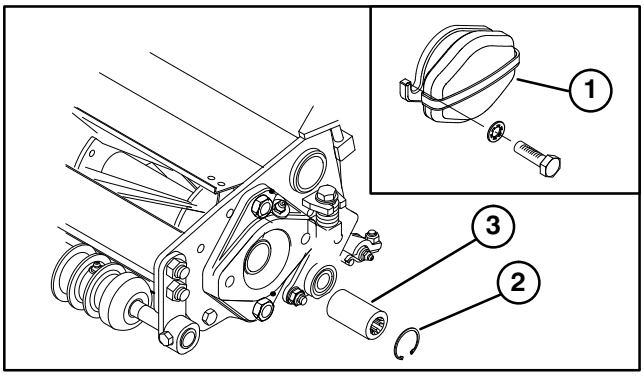

Figure 8
1. Counter weight
2. Snap ring
3. Drive coupler

2. Slide the cutting unit under the pull frame while hooking the lift roller onto lift arm (Fig. 9).

3. Mount traction unit pull frame to cutting unit with (2) shoulder bolts.

4. Affix a rubber pad to each cutting unit shield, positioning it directly under lift arm (Fig. 9).

Note: Retain the protective covers for the cutting units. Install them whenever the reel drive motors are removed to protect the cutting unit bearings from contamination.

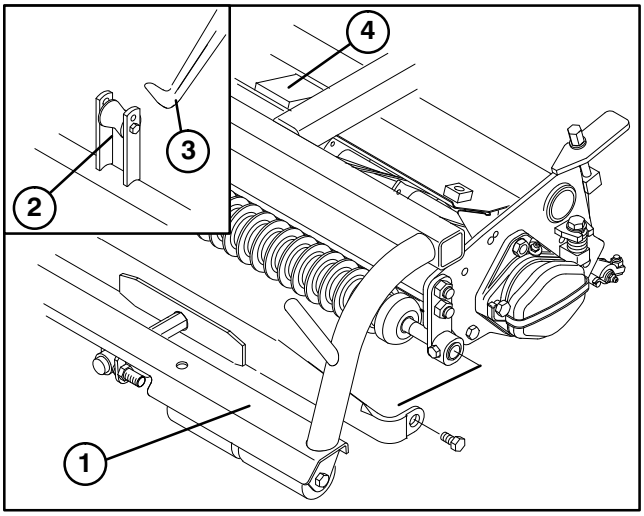

Figure 9
1. Pull frame
2. Lift roller
3. Lift arm
4. Rubber pad

5. Assemble the mounting capscrews for the reel drive motor to each cutting unit. Leave approximately 1/2 in. of threads exposed on each mounting capscrew (Fig. 10).

6. Remove the protective covers from the cutting units and the reel drive motor shafts.

7. Using a hand pump grease gun, fill cavity at end of cutting unit with #2 general purpose grease.

SET UP INSTRUCTIONS

8. Coat the spline shaft of the motor with clean grease and install the motor by rotating the motor clockwise so the motor flanges clear the studs. Rotate the motor counter−clockwise until the flanges are encircling the studs and tighten the mounting capscrews (Fig. 10).

9. Slide baskets onto pull frames.

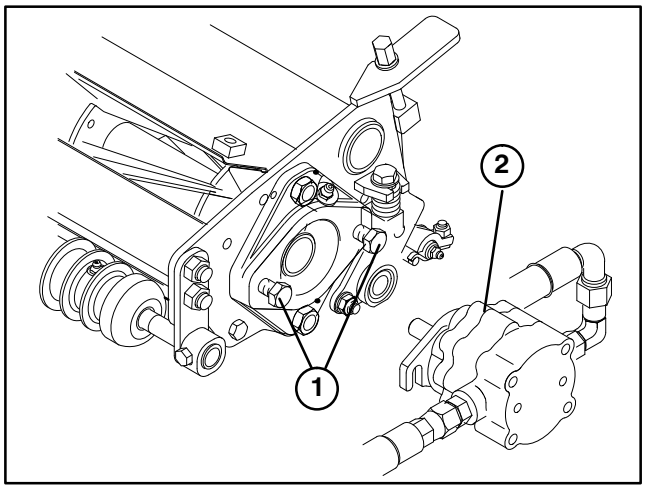

Figure 10
1. Capscrews
2. Drive motor

BEFORE OPERATING

CAUTION

Before servicing or making adjustments to the machine, stop engine and remove key from the switch.

CHECK ENGINE OIL (Fig. 11−12)

The engine is shipped with oil in the crankcase; however, level of oil must be checked before and after the engine is first started.

Crankcase capacity is approximately 3.2 qts. (3 L) with filter.

1. Position machine on a level surface.

2. Remove dipstick and wipe it with a clean rag. Push dipstick down into dipstick tube and make sure it is seated fully. Pull dipstick out and check level of oil. If oil level is low, add enough oil to raise level to FULL mark on dipstick.

3. If oil level is low, remove oil fill cap (Fig. 12) and gradually add small quantities of oil, checking level frequently, until level reaches FULL mark on dipstick.

4. The engine uses any high−quality 10W30 detergent oil having the American Petroleum Institute − API − "service classification" CD, CE, CF, CF−4 OR CG−4.

IMPORTANT: Check level of oil every 5 operating hours or daily. Change oil after every 50 hours of operation.

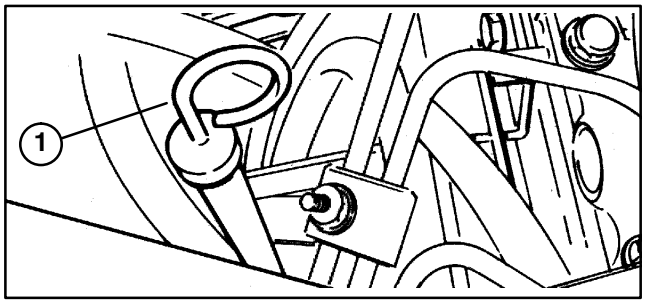

Figure 11
1. Dipstick

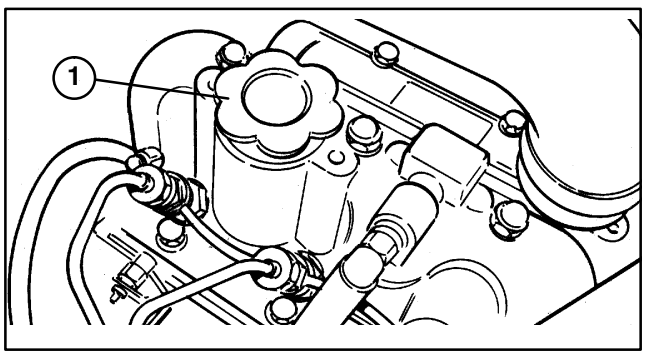

Figure 12
1. Oil fill cap

BEFORE OPERATING

FILL FUEL TANK (Fig. 13)

The engine runs on No. 2 diesel fuel.

Fuel tank capacity is approximately 6 gallons (22.7 L)

1. Clean area around fuel tank cap.

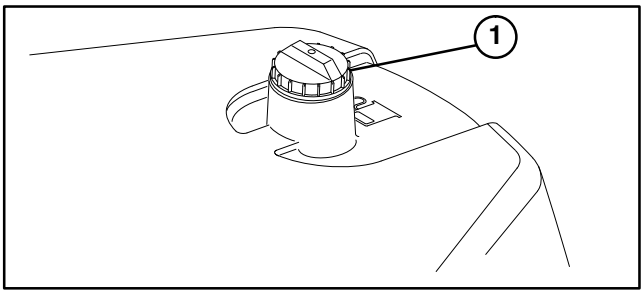

Figure 13
1. Fuel tank cap

2. Remove fuel tank cap.

DANGER

Because diesel fuel is flammable, use caution when storing or handling it. Do not smoke while filling the fuel tank. Do not fill fuel tank while engine is running, hot, or when machine is in an enclosed area. Always fill fuel tank outside and wipe up any spilled diesel fuel before starting the engine. Store fuel in a clean, safety−approved container and keep cap in place. Use diesel fuel for the engine only; not for any other purpose.

3. Fill tank to about one inch below top of tank, (bottom of filler neck). **DO NOT OVERFILL.** Then install cap.

4. Wipe up any fuel that may have spilled to prevent a fire hazard.

CHECK COOLING SYSTEM (Fig. 14 & 15)

Capacity of cooling system is approximately 3.6 qts. (3.4 L).

Clean debris off radiator screen and radiator daily (Fig. 14), hourly if conditions are extremely dusty and dirty; refer to Cleaning Radiator and Screen Section.

1. The cooling system is filled with a 50/50 solution of water and permanent ethylene glycol anti−freeze. Check level of coolant at beginning of each day before starting the engine.

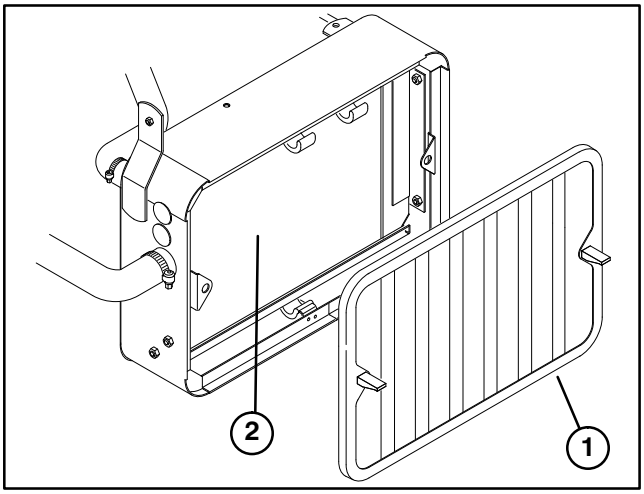

Figure 14
1. Radiator screen
2. Radiator

CAUTION

If engine has been running, pressurized hot coolant can escape when radiator cap is removed and cause burns.

1. Park machine on a level surface.

2. Check coolant level. Coolant should be between lines on reserve tank, when engine is cold.

3. If coolant is low, remove reserve tank cap and add a 50/50 mixture of water and permanent ethylene glycol anti−freeze. **DO NOT OVERFILL**.

4. Install reserve tank cap.

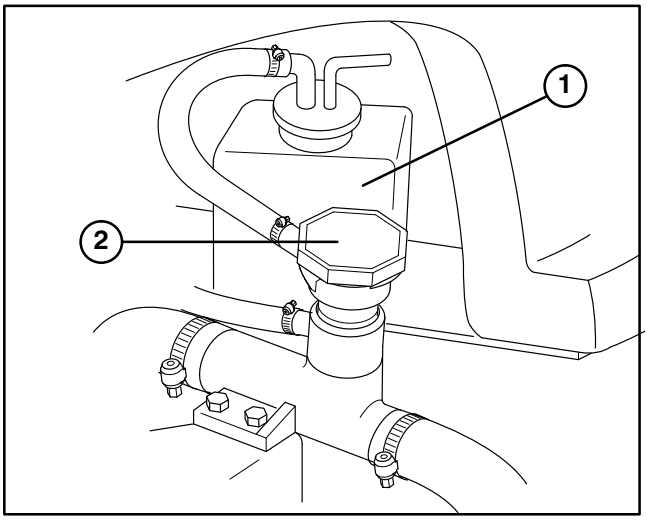

Figure 15
1. Reserve tank
2. Radiator cap

BEFORE OPERATING

CHECK HYDRAULIC SYSTEM FLUID

(Fig. 16)

The hydraulic system is designed to operate on anti−wear hydraulic fluid. The machines reservoir is filled at the factory with approximately 5.5 gallons (20.8 L) of Mobil 424 hydraulic fluid. **Check level of hydraulic fluid before engine is first started and daily thereafter.**

Group 1 Hydraulic Fluid (Recommended for ambient temperatures consistently below 100˚ F.):

ISO type 46/68 anti−wear hydraulic fluid

Mobil	Mobil Fluid 424
Amoc	Amoco 1000
International Harvester	Hy−Tran
Texaco	TDH
Shell	Donax TD
Union Oil	Hydraulic/Tractor Fluid
Chevron	Tractor Hydraulic Fluid
BP Oil	BP HYD TF
Boron Oil	Eldoran UTH
Exxon	Torque Fluid
Conoco	Power−Tran 3
Kendall	Hyken 052
Phillips	HG Fluid

Note: The fluids within this group are interchangeable.

Group 2 Hydraulic Fluid (Recommended for ambient temperatures consistently above 70˚ F.):

ISO type 68 anti−wear hydraulic fluid

Mobil	DTE 26 or DTE 16
Shell	Tellus 68
Amoco	Rykon Oil 68
Arco	Duro AW S−315
Boron	Industron 53
BP Oil	Energol HLP68
Castrol	Hyspin AWS68
Chevron	Chevron EP68
Citgo	Citgo A/W68
Conoco	Super Hydraulic Oil 31
Exxon	Nuto H68
Gulf	68AW
Pennzoi	lAW Hyd Oil 68
Phillips	Magnus A315
Standard	Industron 53
Texaco	Rando HD68
Union	Unax AW 315

Note: The fluids within this group are interchangeable.

IMPORTANT: Two groups of hydraulic fluid are specified to allow optimal operation of the machine in a wide range of temperatures encountered. The group 1 fluids are a multi−viscosity hydraulic fluids which allows operation at lower temperatures without the increased viscosity, which is associated with straight viscosity fluids.

Using the Mobil 424 type fluids in the higher ambient temperatures may result in decreased efficiency in some of the hydraulic components compared to using the Mobil DTE 26 type fluids.

The Mobil DTE 26 type fluids are straight viscosity fluids which remain slightly more viscous at higher temperatures than the multi−viscosity fluids.

Using the Mobil DTE 26 type fluids in the lower ambient temperatures may result in harder starting, increased engine laboring while cold, sluggish or non−operating valve spools while cold and increase filter back pressure due to the higher fluid viscosity.

It is recommended that you select which set of conditions (either ambient temperatures above 70˚ F. or below 100˚ F.), and use that type of fluid throughout the year, rather than changing fluid types several times per year.

Group 3 Hydraulic Fluid (Biodegradable):

ISO VG 32/46 anti−wear hydraulic fluid

Mobil	EAL 224 H

Note: This biodegradable hydraulic fluid in this group is not compatible with the fluids in group 1 or 2.

Note: Using this hydraulic fluid may require the installation of a Oil Cooler Kit, Toro Model No. 04499 to traction unit.

NOTE: When changing from one type of hydraulic fluid to the other, be certain to remove all the old fluid from the system, because some brands of one type are not completely compatible with some brands of the other type of hydraulic fluid.

IMPORTANT: Use only types of hydraulic fluids specified. Other fluids could cause system damage.

Note: A red dye additive for the hydraulic system fluid is available in 2/3 oz bottles. One bottle is sufficient for 4−6 gal of hydraulic fluid. Order Part No. 44−2500 from your Authorized Toro Distributor.

1. Position machine on a level surface. Make sure machine has cooled down so fluid is cold.

2. Remove cap from reservoir and check level of fluid. The fluid should be up to bottom of screen in filler neck.

3. If fluid level is low, slowly fill reservoir with appropriate hydraulic fluid until level reaches bottom of screen. **DO NOT OVERFILL.**

IMPORTANT: To prevent system contamination, clean top of hydraulic fluid containers before puncturing. Assure pour spout and funnel are clean.

4. Install reservoir cap. Wipe up any fluid that may have spilled.

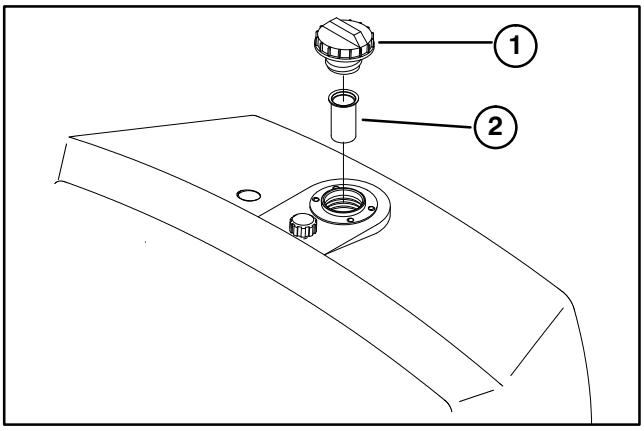

Figure 16
1. Hydraulic reservoir cap
2. Screen

INSPECT FUEL FILTER (Fig. 17)

Inspect fuel filter bowl, daily, for water or other contaminants. If water or other contaminants are present, they must be removed before commencing operation.

1. Close fuel shut−off above filter.

2. Unscrew nut securing bowl to filter head. Remove water or other contaminants from bowl.

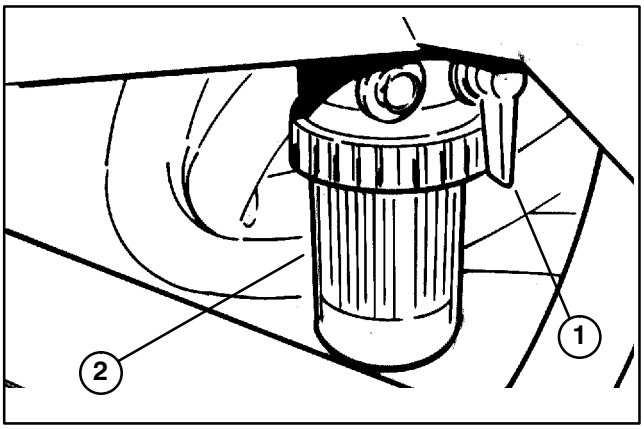

Figure 17
1. Fuel shut−off
2. Fuel filter

3. Inspect fuel filter and replace if dirty. Refer to Replacing Fuel Filter.

4. Re−install bowl to filter head. Make sure O−ring is positioned properly between bowl mounting nut and filter head.

5. Open fuel shut−off above filter.

6. Open bleed screw on filter mounting allowing bowl to re−fill with fuel. Close bleed screw.

DANGER

Because diesel fuel is flammable, use caution when storing or handling it. Do not smoke while filling the fuel tank. Do not fill fuel tank while engine is running, hot, or when machine is in an enclosed area. Always fill fuel tank outside and wipe up any spilled diesel fuel before starting the engine. Store fuel in a clean, safety−approved container and keep cap in place. Use diesel fuel for the engine only; not for any other purpose.

CHECK TIRE PRESSURE

The tires are over−inflated for shipping. Therefore, release some of the air to reduce the pressure. Correct air pressure is:

Front tires 8 −12 psi
Rear tire 8−15 psi.

CHECK REEL TO BEDKNIFE CONTACT

Each day before operating, check reel to bedknife contact, regardless if quality of cut had previously been acceptable. There must be light contact across the full length of the reel and bedknife (refer to Adjusting Reel to Bedknife in Cutting Unit Operator's Manual).

CHECK TORQUE OF WHEEL NUTS

WARNING

Torque wheel nuts to 40-50 ft−lb after 1-4 hours of operation and again after 10 hours of operation and every 200 hours thereafter. Failure to maintain proper torque could result in failure or loss of wheel and may result in personal injury.

CONTROLS

Traction Pedal (Fig. 18) – Traction pedal has three functions; one to make the machine move forward, two, to move it backward and three, to stop machine. Depress top of pedal to move forward and bottom of pedal to move backward or to assist in stopping when moving forward. Also, allow pedal to move to neutral position to stop machine. For operator comfort, do not rest heel of foot on reverse, when operating forward (Fig. 19).

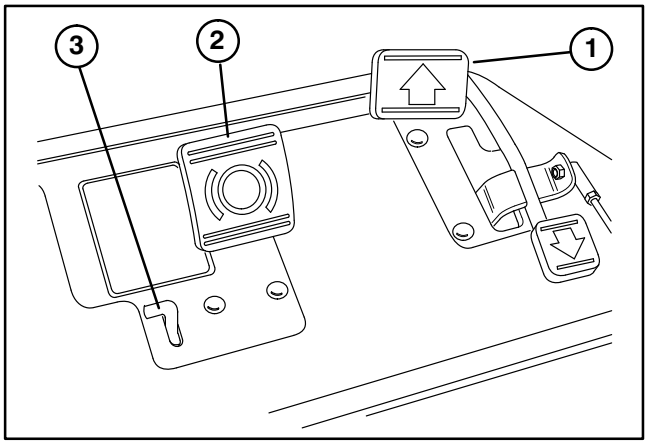

Figure 18

1. Traction pedal
2. Brake pedal
3. Parking brake lever

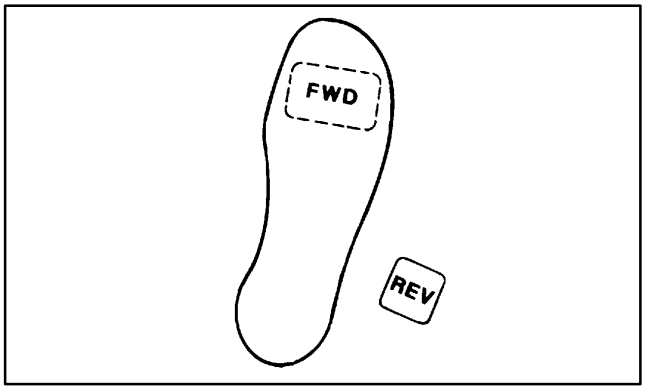

Figure 19

Brake Pedal (Fig.18) –The Brake Pedal actuates an automotive drum–type mechanical brake located at each traction wheel.

Parking Brake Lever (Fig. 18) – Depressing the Brake Pedal to actuate the brake assembly, then depressing the small lever indicated will keep the brakes actuated for parking. Disengage by depressing the brake pedal. Form the habit of locking the parking brake before you leave the machine.

Throttle Control (Fig. 20) – The Throttle Control gives the operator the ability to control the speed of the engine. Moving the Throttle Control toward the "FAST" position increases engine RPM; moving Throttle Control toward "SLOW" will decrease engine RPM.

Functional Control Lever (Fig.20) – Provides two (2) traction selections, plus a "NEUTRAL" position. It is permissible to shift from mow to transport or transport to mow (not to neutral) while the Greensmaster 3200–D is in motion. No damage will result.

1. Rear Position – Neutral and backlapping.
2. Middle Position – Used for mowing operation.
3. Front Position – Used for transport operation.

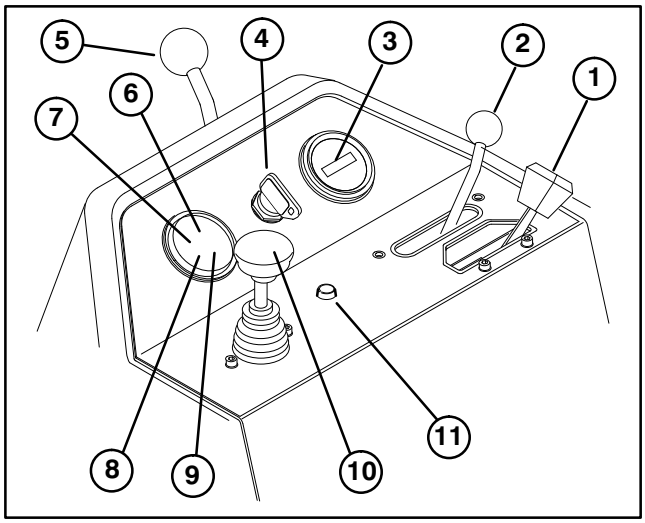

Figure 20

1. Throttle control
2. Functional control Lever
3. Hour meter
4. Ignition switch
5. Steering arm locking lever
6. Water temperature light
7. Engine oil pressure light
8. Battery warning light
9. Glow plug light
10. Raise/Lower/Mow control
11. High temp. override button

Hour Meter (Fig.20) – Indicates the total hours of machine operation. The hour meter starts to function whenever the key switch is rotated to "ON".

Ignition Switch (Fig. 20) – Insert key into switch, turn clockwise as far as possible to "START" position to start engine. Release key as soon as engine starts; key will move to "ON" position. Turn key counter–clockwise to "OFF" position to stop engine.

Steering Arm Locking Lever (Fig.20) – Rotate lever rearward to loosen adjustment, raise or lower steering arm for operator comfort, then, rotate lever forward to tighten adjustment.

Water Temperature Light (Fig. 20) — Light glows and engine automatically shuts–down when engine coolant temperature gets too high.

High Temperature Override Button (Fig. 20) —If engine kills due to an over heat condition, press over ride button in and hold until machine can be moved to a safe location and allowed to cool down.

Note: When using override button, it must be held down continuously to operate. Do not use for extended periods of time.

CONTROLS

Glow Plug Indicator Light (Fig. 20) – When lit, indicates glow plugs are on.

Battery Warning Light (Fig. 20) – Light glows if battery charge is low.

Oil Pressure Light (Fig. 20) — Light glows if engine oil pressure drops below a safe level.

Raise / Lower – Mow Control (Fig 20) – Moving control forward, during operation, lowers the cutting units and starts the reels. Pull back on control to stop reels and raise cutting units. During operation reels can be stopped by pulling back on control momentarily and releasing. Restart reels by moving control forward.

Seat Adjusting Handle (Fig. 21) – Lever on left side of seat allows seven inch fore and aft adjustment.

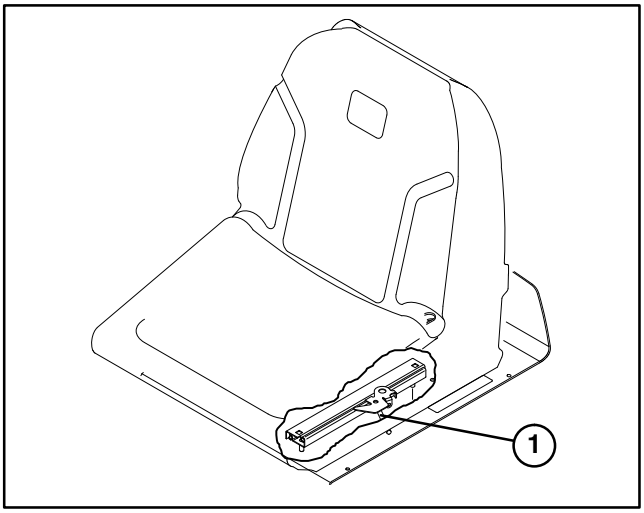

Figure 21
1. Seat adjusting handle

FUEL SHUT–OFF VALVES (Fig. 22 & 23) — Close fuel shut–off valves, under fuel tank and above fuel filter when storing machine.

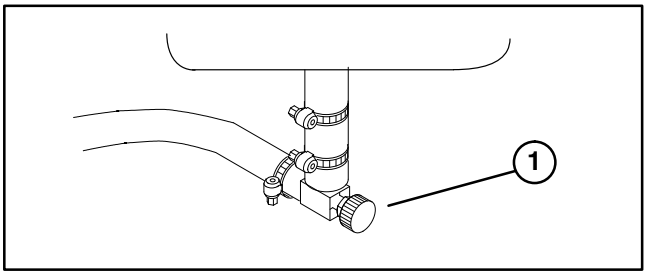

Figure 22
1. Fuel shut off (under fuel tank)

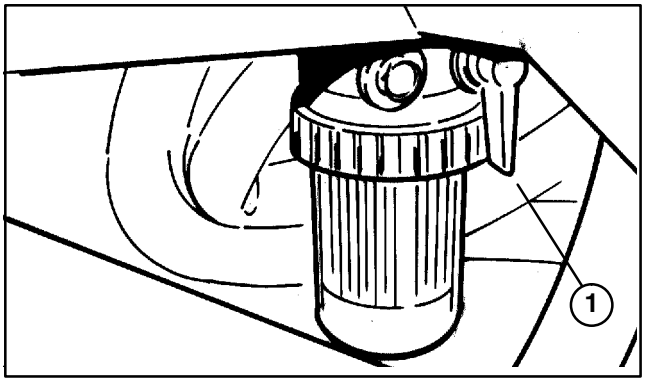

Figure 23
1. Fuel shut off (on fuel filter)

OPERATING INSTRUCTIONS

BREAK−IN PERIOD

1. Only 8 hours of mowing operation is required for the Greensmaster 3200−D break−in period.

2. Since the first hours of operation are critical to future dependability of the machine, monitor its functions and performance closely so that minor difficulties, which could lead to major problems, are noted and can be corrected. Inspect the Greensmaster 3200−D frequently during break−in for signs of oil leakage, loose fasteners, or any other malfunction.

3. To assure optimum performance of the brake system, burnish (break−in) the brakes before use. To burnish brakes: Firmly apply brakes and drive machine at mowing speed until brakes are hot, as indicated by their smell. An adjustment to the brakes may be required after break−in, refer to Brake Adjustment.

STARTING INSTRUCTIONS

IMPORTANT: The fuel system may have to be bled if any of the following situations have occurred:

A. Initial start up of a new engine.

B. Engine has ceased running due to lack of fuel.

C. Maintenance has been performed upon fuel system components; i.e. filter replaced, etc.

Refer to Bleeding Fuel System

1. Be sure parking brake is set, raise / lower / mow control is disengaged and the functional control is in neutral position.

2. Remove foot from traction pedal and make sure pedal is in neutral position.

3. Move throttle lever to full throttle position.

4. Insert key into switch and rotate it to ON position and hold until glow plug indicator light goes off (approximately 6 seconds).

5. Immediately turn ignition key to START position. Release key when engine starts and allow it to move to On position. Move throttle control to SLOW position.

IMPORTANT: To prevent overheating of the starter motor, do not engage starter longer than 10 seconds. After 10 seconds of continuous cranking, wait 60 seconds before engaging starter motor again.

6. When engine is started for the first time, or after overhaul of the engine, operate the machine in forward and reverse for one to two minutes.

Turn steering wheel to the left and right to check steering response. Then shut engine off and check for oil leaks, loose parts and any other noticeable malfunctions.

CAUTION

Shut engine off and wait for all moving parts to stop before checking for oil leaks, loose parts and other malfunctions.

7. To stop engine, move throttle control to SLOW position, make sure raise / lower / mow control is disengaged and the functional control is in neutral position. Rotate starter key to OFF. Remove key from switch to prevent accidental starting.

8. Close fuel shut off valves before storing machine.

BLEEDING FUEL SYSTEM (Fig. 24−25)

1. Park the machine on a level surface. Make sure fuel tank is at least half full.

DANGER

Because diesel fuel is flammable, use caution when storing or handling it. Do not smoke while filling the fuel tank. Do not fill fuel tank while engine is running, hot, or when machine is in an enclosed area. Always fill fuel tank outside and wipe up any spilled diesel fuel before starting the engine. Store fuel in a clean, safety−approved container and keep cap in place. Use diesel fuel for the engine only; not for any other purpose.

2. Open fuel shut−off valve under fuel tank and on fuel filter.

3. Open (2) bleed screws, on side of fuel filter mounting head, allowing bowl to re−fill with fuel. Close bleed screws when bowl is filled.

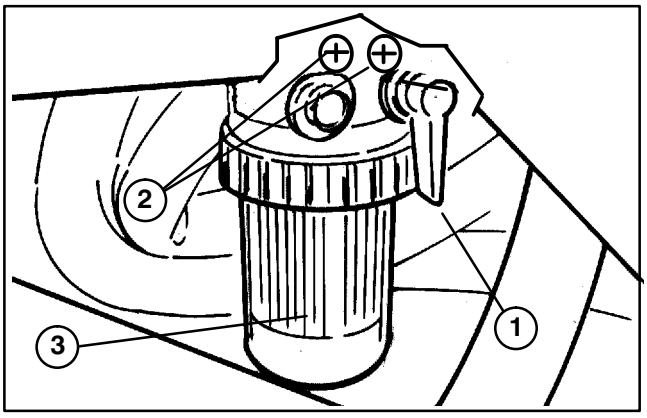

Figure 24

1. Fuel shut off
2. Bleed screws (2)
3. Bowl

4. On front of engine (by oil filter) locate transfer pump inlet screw. Note angle of fitting on transfer pump inlet and loosen screw (left screw only).

5. When a steady stream of fuel flows out of transfer pump screw, tighten screw, retaining angle of fitting before loosening.

6. Loosen injection pump inlet screw on front of engine.

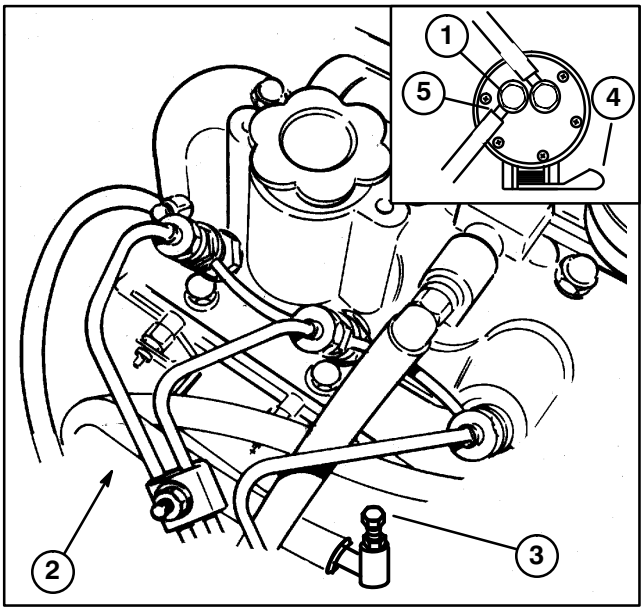

Figure 25

1. Transfer pump screw
2. Transfer pump inlet screw location
3. Injection pump inlet screw
4. Priming lever
5. Note fitting angle

7. Pump priming lever until a steady stream of fuel flows out of injection pump inlet screw, then tighten screw.

CHECK INTERLOCK SYSTEM OPERATION

The purpose of the interlock system is to prevent engine from cranking or operating traction pedal if functional control lever is not in neutral. Also, engine will shut off if operator leaves seat without functional control lever in neutral. Reels will shut–off if functional control lever is moved to neutral or transport. Perform the following system checks daily to be sure the interlock system is operating correctly.

1. Sit on seat, engage parking brake, move functional control lever to neutral and try to depress traction pedal. The pedal should not depress, which means the interlock system is operating correctly. Correct problem if not operating properly.

2. Sit on the seat, engage parking brake, traction pedal in neutral, functional control lever in mow or transport and try to start engine. The engine should not crank, which means the interlock system is operating correctly. Correct problem if not operating properly.

3. Sit on the seat and start engine. Move functional control lever to mow and Raise off seat. The engine should kill, which means the interlock system is operating correctly. Correct problem if not operating properly.

4. Sit on the seat, engage parking brake, traction pedal in neutral, functional control lever in neutral and start engine. Move raise / lower – mow control forward to lower cutting units but they should not start rotating which means the interlock system is operating correctly. Correct problem if not operating properly.

CAUTION

THE INTERLOCK SWITCHES ARE FOR THE OPERATOR'S PROTECTION, SO DO NOT DISCONNECT THEM. CHECK OPERATION OF THE SWITCHES DAILY TO ASSURE INTERLOCK SYSTEM IS OPERATING. IF A SWITCH IS DEFECTIVE, REPLACE IT BEFORE OPERATING. REGARDLESS IF SWITCHES ARE OPERATING PROPERLY OR NOT, REPLACE THEM EVERY TWO YEARS TO ASSURE MAXIMUM SAFETY. DO NOT RELY ENTIRELY ON SAFETY SWITCHES – USE COMMON SENSE!

PREPARING MACHINE FOR MOWING

To assist in aligning the machine for successive cutting passes, it is suggested the following be done to the 2 and No. 3 cutting unit baskets:

1. Measure in approximately 5 inches from the outer edge of each basket.

2. Either place a strip of white tape or paint a line onto each basket paralleling the outer edge of each basket (Fig. 26)

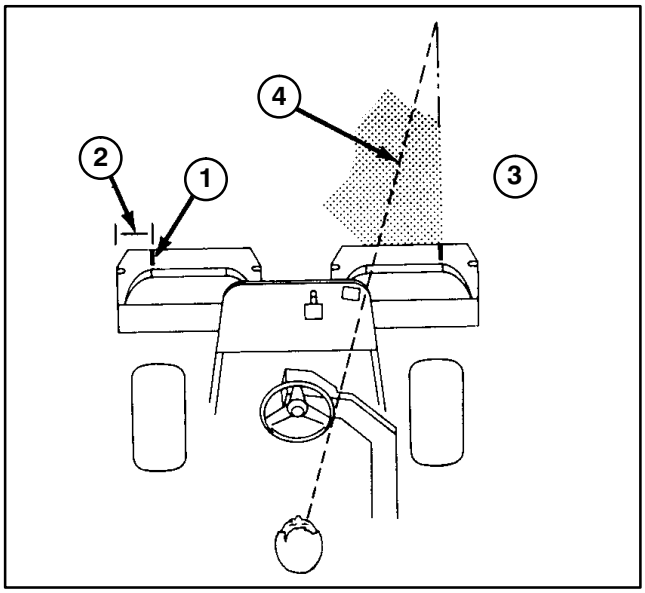

Figure 26

1. Alignment strip
2. Approx. 5 in.
3. Cut grass on right
4. Keep focal spot 6–10 ft ahead of machine

TRAINING PERIOD

Before mowing greens with the GREENSMASTER 3200–D, The Toro Company suggests that you find a clear area and practice starting and stopping, raising and lowering cutting units, turning, etc. This training period will be beneficial to the operator in gaining confidence in the performance of the GREENSMASTER 3200–D.

CAUTION: This product may exceed noise levels of 85 dB(A) at the operator position. Ear protectors are recommended, for prolonged exposure, to reduce the potential of permanent hearing damage.

BEFORE MOWING

Inspect the green for debris, remove the flag from the cup, and determine the direction best to mow. Base the direction to mow on the previous mowing direction. Always mow in an alternate pattern from the previous mowing, so that the grass blades will be less apt to lay down and therefore be difficult to trap between the reel blades and bed knife.

MOWING PROCEDURES

1. Approach the green with the Functional Control Lever in the MOW position and throttle at FULL speed. Start on one edge of the green so the ribbon procedure of cutting may be used. This holds compaction to a minimum and leaves a neat, attractive pattern on the greens.

2. Actuate the raise/lower–mow lever as the front edge of the grass baskets cross the outer edge of the green. This procedure drops the cutting units to the turf and starts the reels.

IMPORTANT: Familiarize yourself with the fact that the No. 1 cutting unit reel is delayed, when lowering and raising, therefore, you should practice to try to gain the required timing necessary to minimize the cleanup mowing operation.

3. Overlap a minimal amount with the previous cut on return passes. To assist in maintaining a straight line across the green and keep the machine an equal distance from the edge of the previous cut, establish an imaginary sight line approximately 6 to 10 feet ahead of the machine to the edge of the uncut portion of the green. Some find it useful to include the outer edge of the steering wheel as part of the sight line; i.e. keep the steering wheel edge aligned with a point that is always kept the same distance away from the front of the machine.

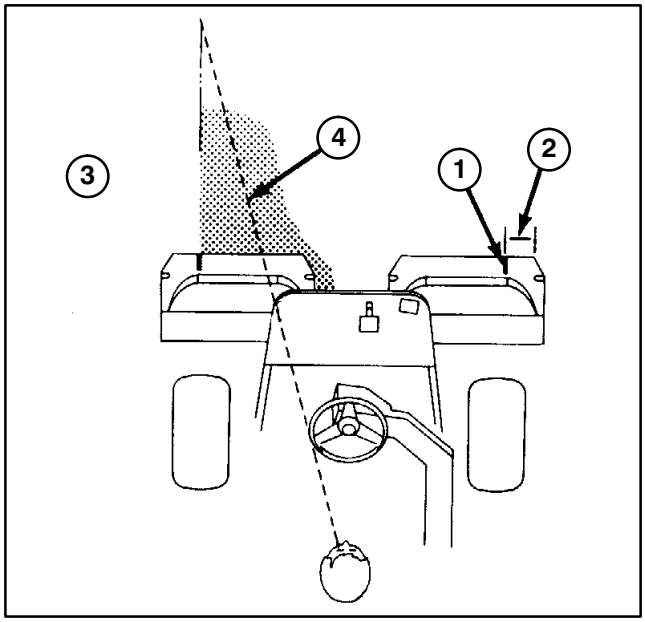

Figure 27

1. Alignment strip
2. Approx. 5 in.
3. Cut grass on right
4. Keep focal spot 6–10 ft ahead of machine

4. As the front of the baskets cross the edge of the green, pull back on raise/lower–mow lever. This will stop the reels and lift the cutting units. Timing of this procedure is important, so the mowers do not cut into the fringe area. However, as much of the green as possible should be cut to minimize the amount of grass left to mow around the outer periphery.

5. Cut down on operating time and ease lineup for the next pass by momentarily turning the machine in opposite direction, then turning in the direction of the uncut portion; i.e., if intending to turn right, first swing slightly left, then right. This will assist in getting the machine more quickly aligned for the next pass. Follow the same procedure for turning in the opposite direction. It's good practice to try to make as short a turn as possible. However, turn in a wider arc during warmer weather to minimize the possibility of bruising the turf.

IMPORTANT: The Greensmaster 3200−D should never be stopped on a green with the cutting unit reels operating as damage to the turf may result. Stopping on a wet green with the Greensmaster 3200−D may leave marks or indentations from the wheels.

7. Finish cutting the green by mowing the outer periphery. Be sure to change the direction of cutting from the previous mowing. Always keep weather and turf conditions in mind and be sure to change the direction of mowing from the previous cutting. Replace the flag.

8. Empty the grass baskets of all clippings before transporting to the next green. Heavy wet clippings place an undue strain on the baskets and will add unnecessary weight to the machine, thereby increasing the load on the engine, hydraulic system, brakes, etc.

TRANSPORT OPERATION

Make sure the cutting units are in the full up position. Move the Functional Control Lever to the TRANSPORT position. Use the brakes to slow the machine while going down steep hills to avoid loss of control. Always approach rough areas at a reduced speed and cross severe undulations carefully. Familiarize yourself with the width of the Greensmaster 3200−D. Do not attempt to pass between objects that are close together so that costly damage and down time can be prevented.

INSPECTION AND CLEAN−UP AFTER MOWING

At the completion of mowing operation, thoroughly wash the machine with a garden hose without a nozzle so excessive water pressure will not cause contamination and damage to seals and bearings. **Never wash a warm engine or electrical connections with water.**

After cleaning, it is recommended the machine be inspected for possible hydraulic fluid leaks, damage or wear to hydraulic and mechanical components and the cutting units checked for sharpness. Also, lubricate the mow and lift pedal and brake shaft assembly with SAE 30 oil or spray lubricant to deter corrosion and help keep the machine performing satisfactorily during the next mowing operation.

TOWING TRACTION UNIT (Fig. 28)

In case of emergency, the Greensmaster 3200−D can be towed for a short distance. However, Toro does not recommend this as a standard procedure.

IMPORTANT: Do not tow the machine faster than 2−3 mph because drive system may be damaged. If machine must be moved a considerable distance, transport it on a truck or trailer.

1. Locate by−pass valve on pump and rotate it 90°.

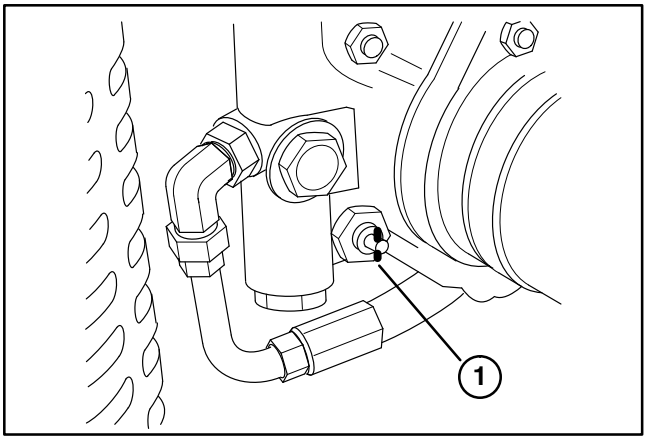

Figure 28
1. By−pass valve

2. Before starting engine, close by−pass valve by rotating it 90°. Do not start engine when valve is open.

SERVICE INTERVAL CHART

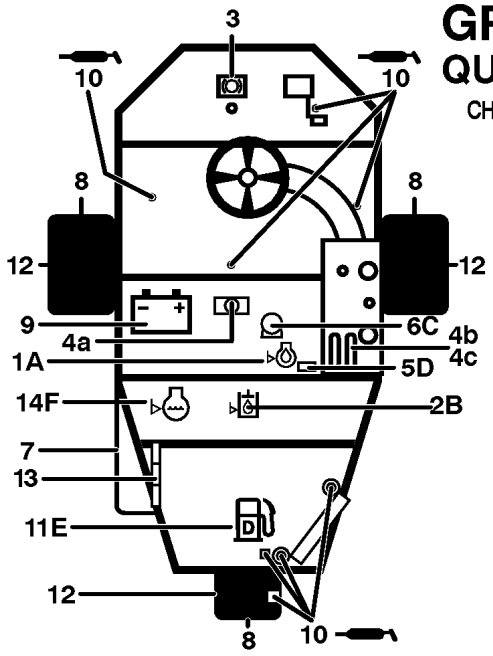

GREENSMASTER 3200-D
QUICK REFERENCE AID

SEE OPERATOR'S MANUAL

CHECK/SERVICE (daily)

1. OIL LEVEL, ENGINE
2. OIL LEVEL, HYDRAULIC TANK
3. BRAKE FUNCTION
4. INTERLOCK SYSTEM:
   - 4a. SEAT INTERLOCK
   - 4b. NEUTRAL SENSOR
   - 4c. MOW SENSOR
5. WATER SEPARATOR/FUEL FILTER
6. AIR CLEANER
7. RADIATOR SCREEN
8. TIRE PRESSURE (8-12 psi front, 8-15 psi rear)
9. BATTERY
10. GREASE POINT (8)
11. FUEL - DIESEL #2
12. WHEEL NUT TORQUE (40-50 FT-LBS)
13. FAN/ALTERNATOR/WATER PUMP BELT
14. COOLANT LEVEL

FLUID SPECIFICATIONS / CHANGE INTERVALS

See operator's manual for initial change	FLUID TYPE	CAPACITY		CHANGE INTERVALS		FILTER PART NO.
		L	QT.	FLUID	FILTER	
A. ENGINE OIL	SAE 10W-30CD	3.0	3.2	50 hrs.	100 hrs.	85-4930
B. HYDRAULIC OIL*	MOBIL 424	20.8	22	800 hrs.	800 hrs.	75-1310
C. AIR CLEANER (CLEAN EVERY 50 HOURS)	———	———		———	200 hrs.	93-2195
D. FUEL FILTER	———	———		———	200 hrs.	PERKINS 130366040
E. FUEL TANK	NO. 2 DIESEL	22.7	6.0 GAL.	Drain and flush, 2 years		
F. COOLANT	50/50 ETHYLENE GLYCOL/ WATER MIX	3.4	3.6	Drain and flush, 2 years		

*Including filter

94-9633

DAILY MAINTENANCE CHECKLIST

Daily Maintenance: (duplicate this page for routine use)

Maintenance Check Item ➧	**Daily Maintenance Check For Week Of _____**						
	MON	TUES	WED	THURS	FRI	SAT	SUN
✓ Safety Interlock Operation							
✓ Instrument Operation							
✓ Brake Operation							
✓ Fuel Level							
✓ Engine Oil Level							
Clean Screen and Radiator							
Inspect Air Filter							
✓ Unusual Engine Noises							
✓ Hydraulic Hoses for Damage							
✓ Fluid Leaks							
✓ Tire Pressure							
✓ Reel–to–Bedknife Adjustment							
✓ Height–of–Cut Adjustment							
Lubricate All Grease Fittings[1]							
Lubricate Traction & Brake Linkage							
Touch–up Damaged Paint							

[1] = Immediately <u>after every</u> washing, regardless of the interval listed.

Notation for areas of concern: Inspection performed by_____

Item	Date	Information
1		
2		
3		
4		
5		
6		
7		
8		

Check proper section of Operator's Manual for fluid specifications

LUBRICATION

CAUTION

Before servicing or making adjustments to the machine, stop engine and remove key from the switch.

The traction unit has grease fittings that must be lubricated regularly with No. 2 General Purpose Lithium Base Grease. If machine is operated under normal conditions, lubricate all bearings and bushings after every 50 hours of operation. Lubricate fittings immediately after every washing, regardless of the interval listed.

The traction unit bearings and bushings that must be lubricated are: Rear wheel hub (1), Castor bearing (1), Steering cylinder (2) (Fig. 29), Lift arms (3) (Fig. 30), Traction pedal pivot (1) (Fig. 31).

1. Wipe grease fitting clean so foreign matter cannot be forced into the bearing or bushing.

2. Pump grease into the bearing or bushing.

3. Wipe up excess grease.

4. Apply grease to reel motor spline shaft and onto lift arm when cutting unit is removed for service.

5. Apply a few drops of SAE 30 engine oil or spray lubricant (WD 40) to all pivot points daily after cleaning.

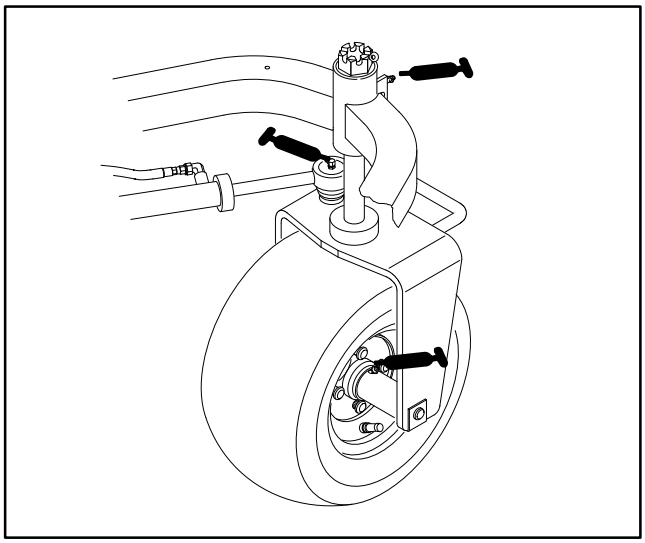

Figure 29

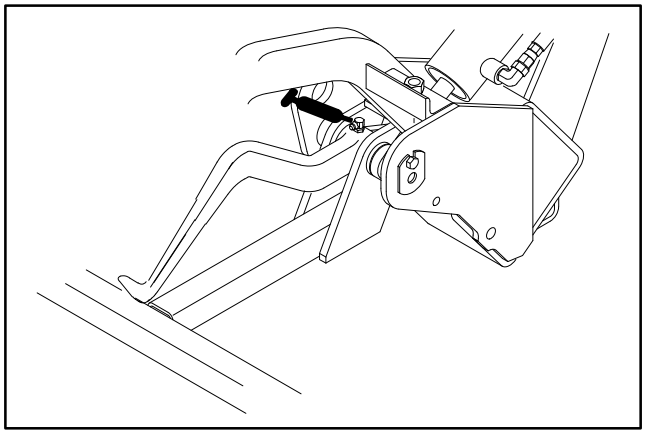

Figure 30

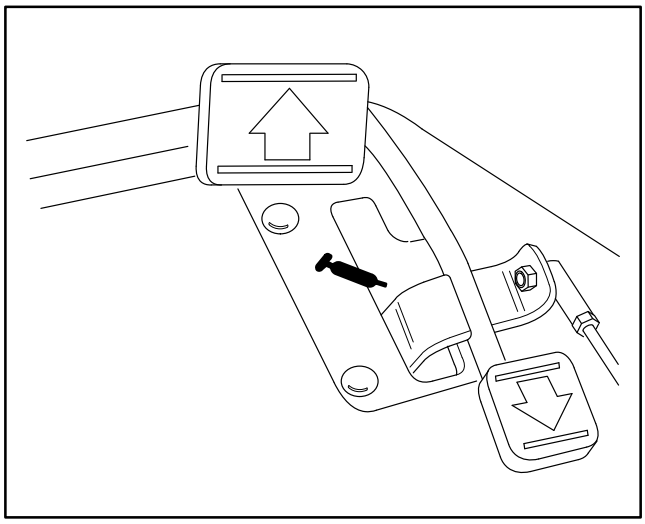

Figure 31

5. Refer to Cutting Unit Operator's Manual for cutting unit lubrication requirements.

CAUTION

Before servicing or making adjustments to the machine, stop engine and remove key from the switch.

GENERAL AIR CLEANER MAINTENANCE

1. Check air cleaner body for damage which could possibly cause an air leak. Replace a damaged air cleaner body.

2. Service the air cleaner filter every 200 hours (more frequently in extreme dusty or dirty conditions).

SERVICING AIR CLEANER (Fig. 32)

1. Release latches securing air cleaner cover to air cleaner body. Separate cover from body. Clean inside of air cleaner cover.

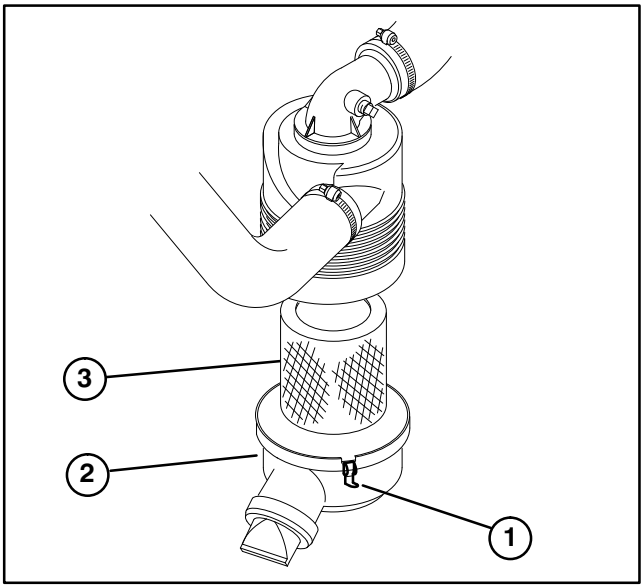

Figure 32
1. Air cleaner latches
2. Dust cup
3. Filter

2. Gently slide filter out of air cleaner body to reduce the amount of dust dislodged. Avoid knocking filter against air cleaner body.

3. Inspect filter and discard if damaged. Do not wash or reuse a damaged filter.

Washing Method

A. Prepare a solution of filter cleaner and water and soak filter element about 15 minutes. Refer to directions on filter cleaner carton for complete information.

B. After soaking filter for 15 minutes, rinse it with clear water. Maximum water pressure must not exceed 40 psi to prevent damage to the filter element. Rinse filter from clean side to dirty to side.

C. Dry filter element using warm, flowing air (160°F) max), or allow element to air−dry. Do not use a light bulb to dry the filter element because damage could result.

Compressed Air Method

A. Blow compressed air from inside to the outside of dry filter element. Do not exceed 100 psi to prevent damage to the element.

B. Keep air hose nozzle at least 2” from filter and move nozzle up and down while rotating the filter element. Inspect for holes and tears by looking through the filter toward a bright light.

5. Inspect new filter for shipping damage. Check sealing end of filter. Do not install a damaged filter.

6. Insert new filter properly into air cleaner body. Make sure filter is sealed properly by applying pressure to outer rim of filter when installing. Do not press on flexible center of filter.

7. Reinstall cover and secure latches.

CLEANING RADIATOR AND SCREEN (Fig. 33)

To prevent the system from overheating, radiator screen and radiator must be kept clean. Check and clean the screen and radiator daily and, if necessary, hourly clean any debris off these parts. Clean these components more frequently in dusty dirty conditions.

1. Remove radiator screen.

2. Working from fan side of radiator, blow out the radiator with compressed air.

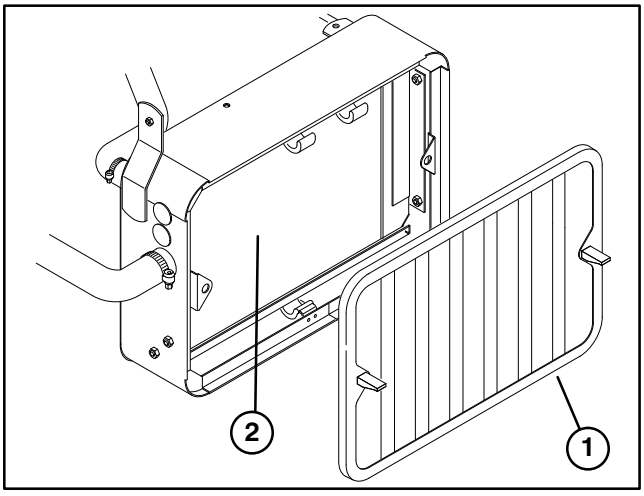

Figure 33
1. Radiator screen
2. Radiator

3. Clean screen and re−install.

MAINTENANCE

CHANGING ENGINE OIL AND FILTER (Fig. 34)

Change oil and filter initially after the first 8 hours of operation, thereafter change oil every 50 hours and filter every 100 hours.

1. Remove drain plug and let oil flow into drain pan. When oil stops, install drain plug.

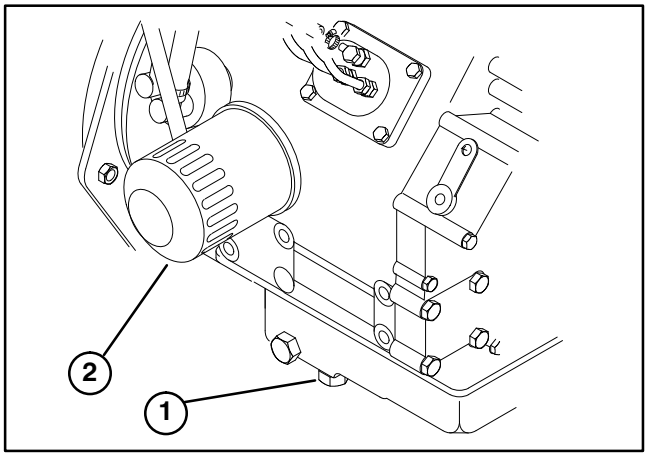

Figure 34
1. Drain plug
2. Oil filter

2. Remove oil filter. Apply a light coat of clean oil to the new filter gasket.

3. Screw filter on by hand until gasket contacts filter adapter, then tighten 1/2 to 3/4 turn further. DO NOT OVER−TIGHTEN.

4. Add oil to crankcase, refer to CHECK ENGINE OIL.

5. Dispose of oil properly.

REPLACING FUEL FILTER (Fig. 35)

Inspect fuel filter bowl, daily, for water or other contaminants. If water or other contaminants are present, they must be removed before commencing operation.

1. Close fuel shut−off valve above filter.

2. Unscrew nut securing bowl to filter head. Remove water or other contaminants from bowl.

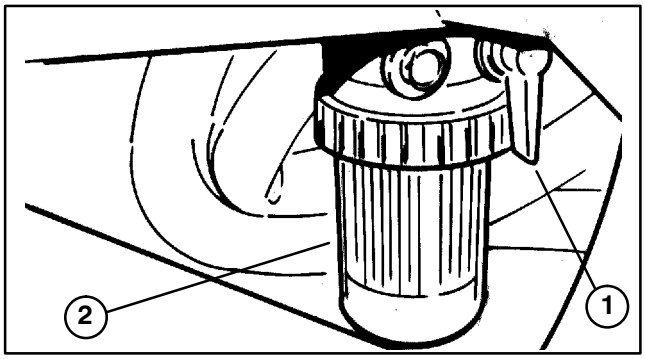

Figure 35
1. Fuel shut−off valve
2. Fuel filter

3. Remove and inspect fuel filter. Replace if dirty.

DANGER

Because diesel fuel is flammable, use caution when storing or handling it. Do not smoke while filling the fuel tank. Do not fill fuel tank while engine is running, hot, or when machine is in an enclosed area. Always fill fuel tank outside and wipe up any spilled diesel fuel before starting the engine. Store fuel in a clean, safety−approved container and keep cap in place. Use diesel fuel for the engine only; not for any other purpose.

4. Re−install bowl to filter head. Make sure O−ring is positioned properly between bowl mounting nut and filter head.

5. Open fuel shut−off above filter.

6. Open bleed screw on filter mounting head to re−fill bowl with fuel. Close bleed screw.

CHANGING HYDRAULIC OIL AND FILTER (Fig. 36)

Change hydraulic filter initially after the first 50 operating hours, thereafter change hydraulic oil and filter after every 800 hours. If oil becomes contaminated, contact your local TORO distributor because the system must be flushed. Contaminated oil looks milky or black when compared to clean oil.

1. Clean area around filter mounting area. Place drain pan under filter and remove filter.

Note: If oil is not going to be drained, disconnect and plug hydraulic line going to filter.

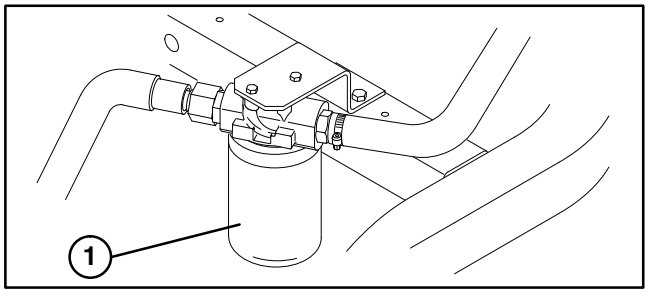

Figure 36
1. Hydraulic Filter

3. Fill the replacement filter with Mobil 424 hydraulic fluid, lubricate the sealing gasket and hand turn until gasket contacts filter head. Then tighten 3/4 turn further. Filter should now be sealed.

4. Fill hydraulic reservoir with approximately 5.5 gallons of hydraulic oil. Refer to CHECK HYDRAULIC SYSTEM.

5. Start the machine and run it at idle for 3 to 5 minutes to circulate the fluid and remove any air trapped in the system. Stop the machine and recheck the fluid level.

6. Dispose of oil properly.

CHECKING HYDRAULIC LINES AND HOSES

Inspect hydraulic lines and hoses daily for leaks, kinked lines, loose mounting supports, wear, loose fittings, weather deterioration and chemical deterioration. Make all necessary repairs before operating.

WARNING

Keep body and hands away from pin hole leaks or nozzles that eject high pressure hydraulic fluid. Use cardboard or paper to find hydraulic leaks. Hydraulic fluid escaping under pressure can penetrate skin and cause injury. Fluid accidentally injected into the skin must be surgically removed within a few hours by a doctor familiar with this form of injury or gangrene may result.

BRAKE ADJUSTMENT (Fig. 37)

A brake adjustment rod is located on each side of the Greensmaster 3200−D so the brakes can be equally adjusted. Adjust the brakes as follows:

1. Drive the machine and depress the brake pedal; both wheels should lock equally.

CAUTION

As a safety precaution, always check brakes in a wide, open spaced, flat area which is free of other persons and obstructions before and after adjustment.

3. Loosen jam nut and adjust clevis accordingly.

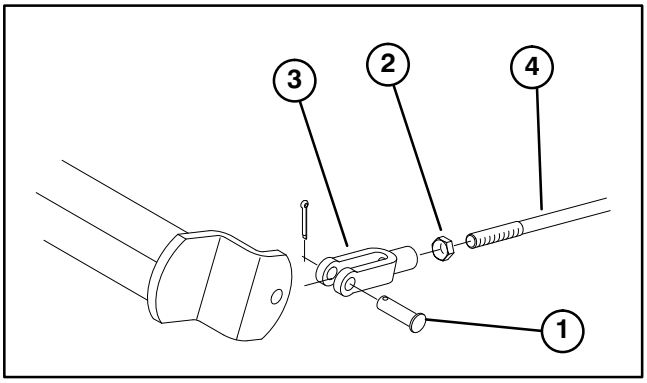

Figure 37

1. Clevis pin & cotter pin
2. Jam nut
3. Clevis
4. Brake shaft

4. Assemble clevis to brake shaft.

5. Check the amount of free travel of the brake pedal when adjustment is completed. There should be 1/2 in. to 1 in. travel before the brake shoes make contact with the brake drums. Re−adjust, if necessary, to achieve this setting.

6. Drive the machine and depress the brake pedal; both brakes should lock equally. Readjust, if necessary.

7. It is recommended that brakes be burnished annually, refer to Break−In Period.

ADJUSTING TRANSMISSION FOR NEUTRAL (Fig. 38)

If the machine “creeps” when the traction control pedal is in the neutral position, the neutral return mechanism must be adjusted.

1. Block up under the frame so one of the front wheels is off the floor.

2. Start engine, move throttle to SLOW and check front wheel that is off shop floor; it must not be rotating.

3. If wheel is rotating, stop engine and proceed as follows:

A. Loosen both jam nuts securing traction control cable to bulkhead on Hydrostat. Make sure jam nuts are loosened equally and sufficiently to allow adjustment.

B. Loosen nut securing eccentric to top of Hydrostat.

C. Move functional control lever to neutral, throttle to slow and start engine.

D. Rotate eccentric until creep does not occur in either direction. When wheel stops rotating, tighten nut locking eccentric and adjustment. Verify the adjustment with throttle in SLOW and FAST position.

E. From each side of bulkhead, tighten locknuts **evenly,** securing traction cable to bulkhead. Do not twist cable.

Note: If cable tension exists when in neutral, machine may creep when the functional control lever is moved to the Mow or Transport position.

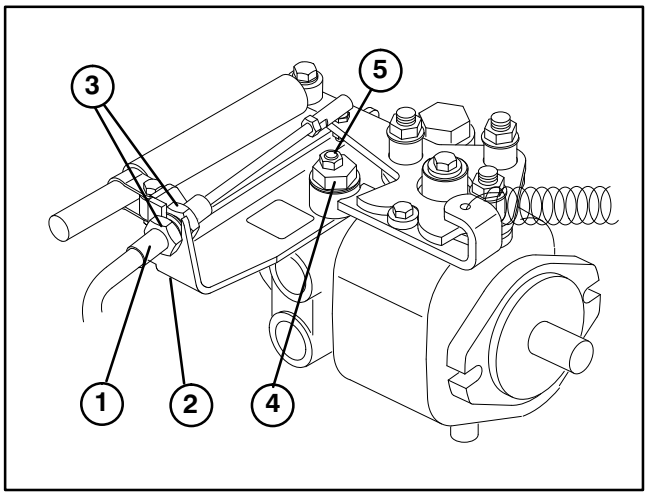

Figure 38

1. Traction Cable
2. Bulkhead
3. Jam nuts
4. Eccentric
5. Locknut

ADJUSTING TRANSPORT SPEED (Fig. 39)

The traction pedal is adjusted for maximum transport speed at the factory, but an adjustment may be required if pedal reaches full stroke before it contacts pedal stop, or if a decrease in transport speed is desired.

1. Press down on traction pedal and see if pedal contacts stop before tension is felt on cable. If an adjustment is required:

A. Loosen flangehead locknuts securing pedal stop to floor plate.

B. Adjust pedal stop so it contacts pedal rod and tighten nuts.

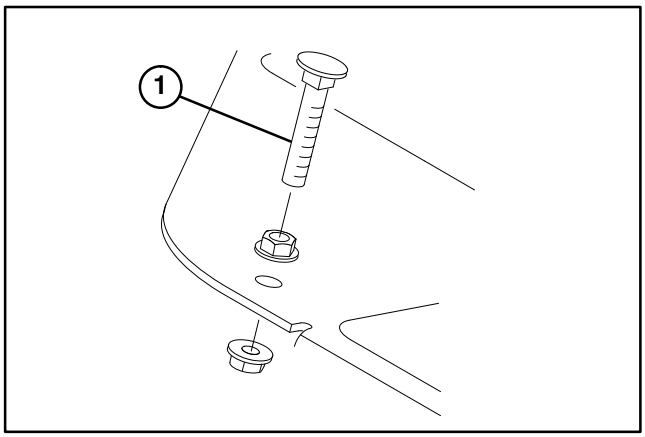

Figure 39

1. Pedal Stop

ADJUSTING MOWING SPEED (Fig. 40)

The machine is adjusted at the factory, but speed may be varied if desired.

1. Loosen jam nut on trunion capscrew.

2. Loosen nut securing lock and mow brackets on pedal pivot.

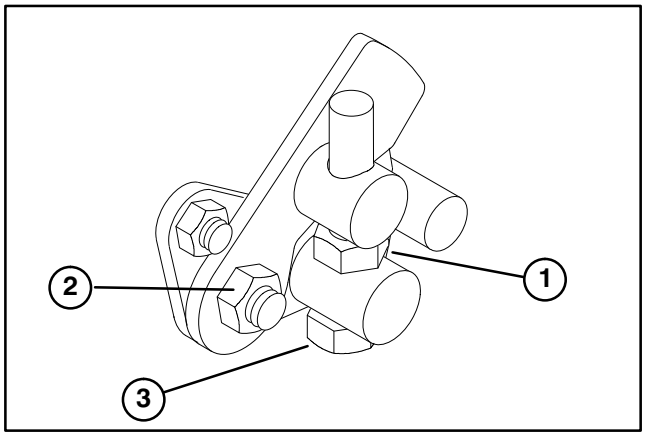

Figure 40

1. Jam nut
2. Nut
3. Trunion capscrew

3. Rotate trunion capscrew clockwise to reduce mowing speed and counterclockwise to increase mowing speed.

4. Tighten jam nut on trunion capscrew and nut on pedal pivot to lock adjustment. Check adjustment and re−adjust as required.

ADJUSTING CUTTING UNIT LIFT/DROP (FIg. 41)

The machines cutting unit lift/drop circuit is equipped with a flow control valve. This valve is pre−set at the factory at approximately 3 turns open, but an adjustment may be required to compensate for differences in hydraulic oil temperatures, mowing speeds, etc. If an adjustment is required proceed as follows:

Note: Allow hydraulic oil to reach full operating temperature before adjusting flow control valve.

1. Raise seat and locate flow control valve mounted to hydraulic cylinder for center pull frame.

2. Loosen set screw on adjusting knob on flow control.

3. Rotate knob 1/4 turn counterclockwise, if center cutting unit is dropping too late or 1/4 turn clockwise if center cutting unit is dropping to early.

4. After desired setting has be achieved, tighten set screw.

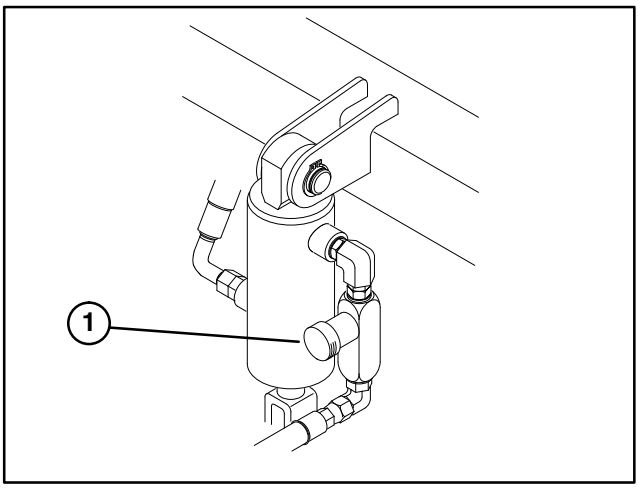

Figure 41
1. Flow Control Valve

BELT ADJUSTMENTS (Fig. 42)

Make sure belt is properly tensioned to assure proper operation of the machine and prevent unnecessary wear. On new belts, check tension after 8 hours operation.

The engine belt should be tensioned so it deflects .20 inch with a 2−3 pound load applied midway between crankshaft and alternator pulley.

1. Loosen bolts securing alternator to engine and adjusting strap.

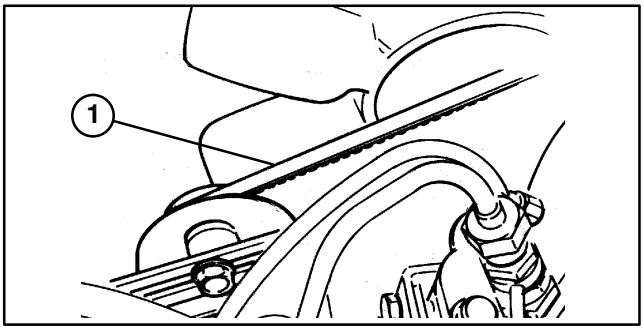

Figure 42
1. Engine belt

2. Adjust belt to proper tension and tighten bolts.

ADJUST VALVE CLEARANCE

Initially, adjust valves after first 50 hours of operation, thereafter every 400 hours.

1. Remove breather hose and cylinder head cover from engine.

Note: Adjust valves when engine is cold. Set the No. 1 cylinder to top dead center and adjust the clearances of intake/exhaust valves of No. 1 cylinder and exhaust valve of No. 2 cylinder. Then, turn the crankshaft counterclockwise 240° (viewed from front) to adjust clearance of intake valve of No. 2 cylinder and intake/exhaust valves of No. 3 cylinder.

2. Loosen nut and adjust clearance of both intake and exhaust valves to .0078" (.2mm).

3. Install cylinder head cover and gasket. Torque screws to 7 to 9 ft/lb. Install breather hose.

TORQUE CYLINDER HEAD BOLTS

Initially, check head bolt torque after first 50 hours of operation, thereafter every 400 hours.

1. Remove breather hose and cylinder head cover from engine.

2. Using sequence in figure 43, torque head bolts to 25 to 29 ft/lb.

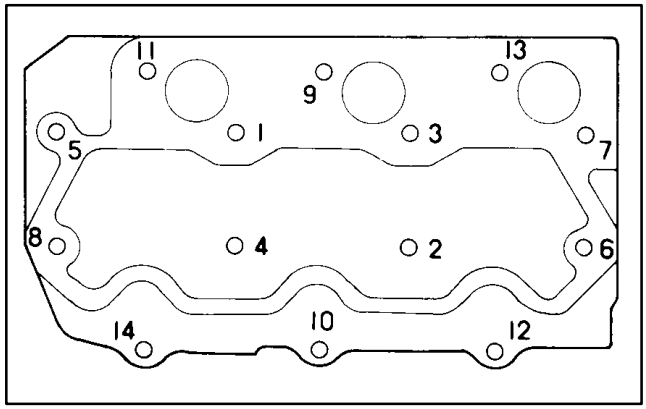

Figure 43

3. Install cylinder head cover and gasket. Torque cover screws to 7 to 9 ft/lb. Install breather hose.

BATTERY CARE

1. Battery electrolyte level must be properly maintained and the top of the battery kept clean. If the machine is stored in a location where temperatures are extremely high, the battery will run down more rapidly than if the machine is stored in a location where temperatures are cool.

2. Check the electrolyte level every 25 operating hours or, if machine is in storage, every 30 days.

3. Maintain cell level with distilled or demineralized water. Do not fill cells above the bottom of the split ring inside each cell. Install filler caps with vents pointing to the rear (toward fuel tank).

CAUTION

Wear safety goggles and rubber gloves when working with electrolyte. Charge the battery in a well ventilated place so gases produced while charging can dissipate. Since the gases are explosive, keep open flame and electrical spark away from the battery; do not smoke. Nausea may result if the gases are inhaled. Unplug charger from electrical outlet before connecting to, or disconnecting, charger leads from battery posts.

4. Keep top of battery clean by washing periodically with a brush dipped in ammonia or bicarbonate of soda solution. Flush the top surface with water after cleaning. Do not remove the fill caps while cleaning.

5. Battery cables must be tight on terminals to provide good electrical contact.

WARNING

Connecting cables to the wrong post could result in personal injury and/or damage to the electrical system.

6. If corrosion occurs at terminals, disconnect cables, negative (—) cable first and scrape clamps and terminals separately. Reconnect cables, positive (+) cable first and coat terminals with petroleum jelly.

7. Always disconnect battery cables, ground cable (—) first, to prevent possible wiring damage from short outs whenever working with the electrical system.

BATTERY STORAGE

If the machine will be stored more than 30 days, remove the battery and charge it fully. Either store it on the shelf on the machine. Leave the cables disconnected if stored on the machine. Store the battery in a cool atmosphere to avoid quick deterioration of the charge in the battery. To prevent battery from freezing, make sure it is fully charged. The specific gravity of a fully charged battery is 1.265 – 1.299.

FUSES (Fig. 44)

The fuses in machines electrical system are located under seat.

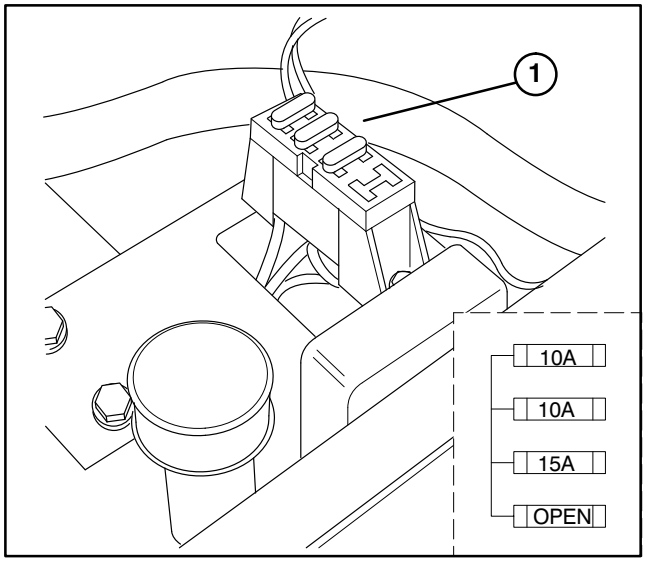

Figure 44
1. Fuses

ELECTRICAL SCHEMATIC

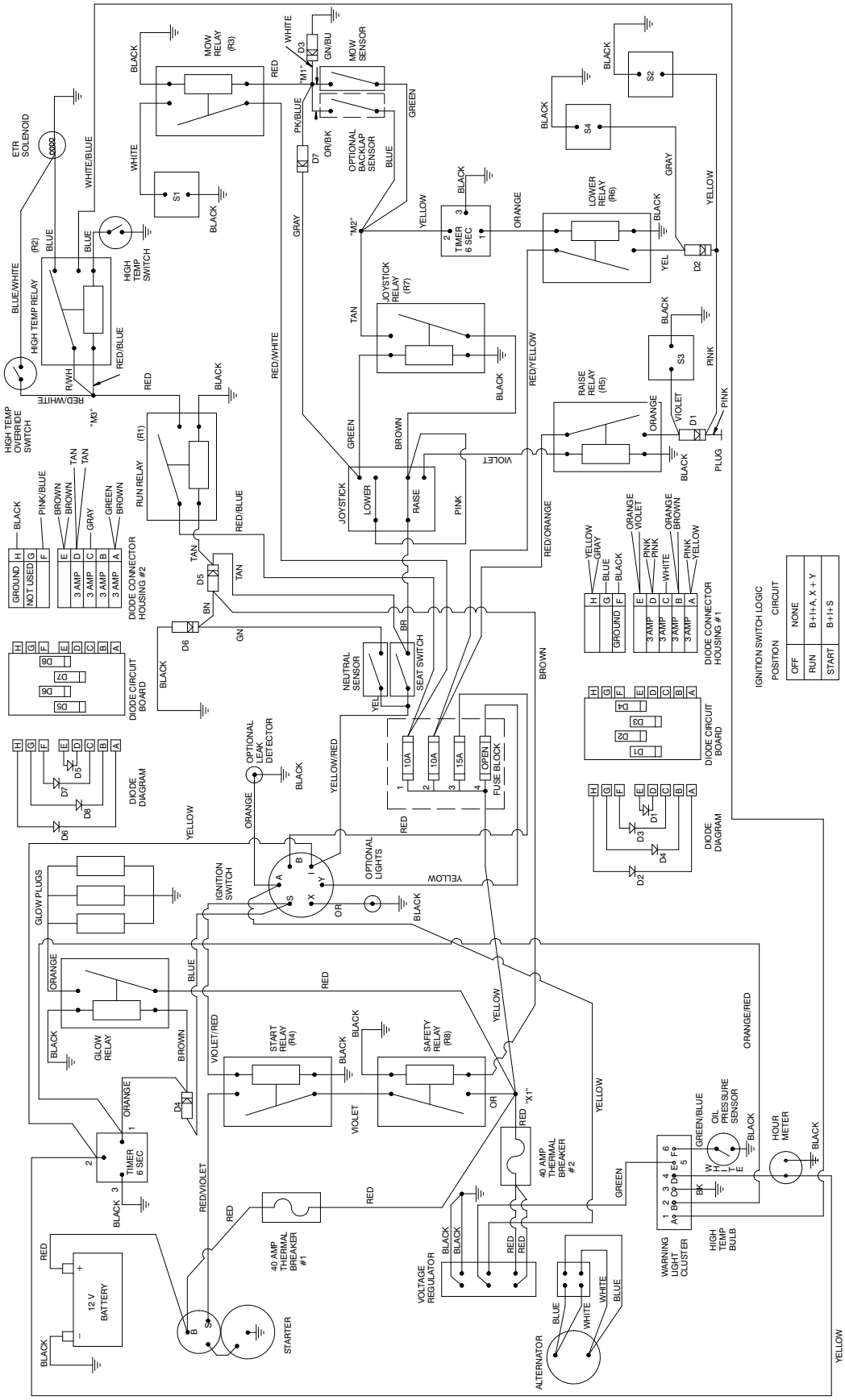

T–2293–2

HYDRAULIC SCHEMATIC

DISPLACEMENT, FLOW RATE, AND PRESSURE CHART						
	DISPLACEMENT		PRESSURE		FLOW RATE	
COMPONENT	in^3/rev	cm^3/rev	lbs/in^2	BARS	GPM	LPM
P1	.50	8.2	–	–	5.9	22.4
P2	.31	5.1	–	–	3.7	13.9
P3	1.24	20.3	–	–	14.8	55.8
M1	.73	12.0	–	–	–	–
M2	.73	12.0	–	–	–	–
M3	.73	12.0	–	–	–	–
M4	10.3	168.8	–	–	–	–
M5	10.3	168.8	–	–	–	–
V1	4.88	80	–	–	–	–
R1	–	–	2400	166	–	–
R2	–	–	300	20	–	–
R4	–	–	100	7	–	–
R5	–	–	1000	69	–	–

✳ ✳ ✳ ✳ FLOW RATE CALCULATED AT 2800 RPM AND 98% EFFICIENCY

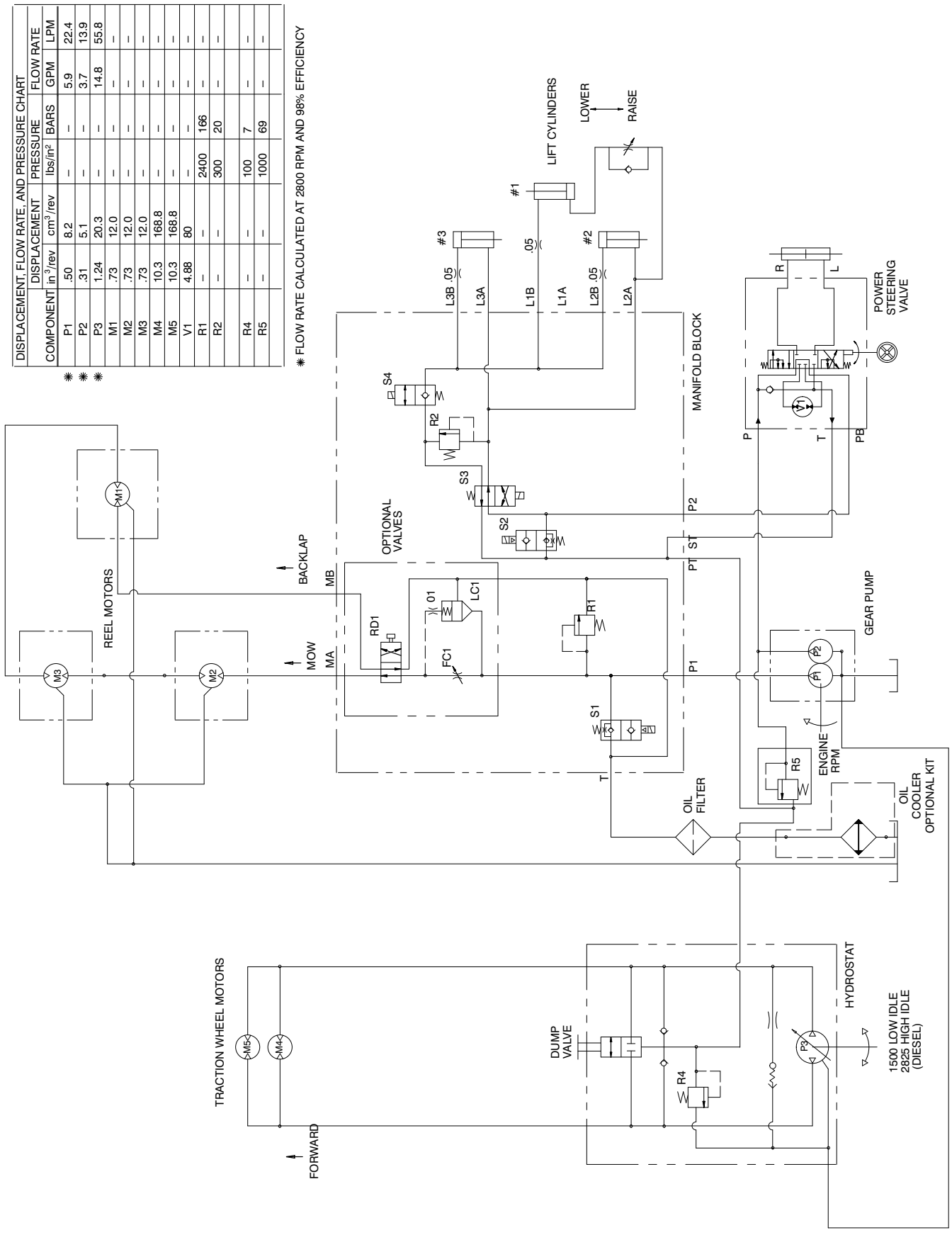

MAINTENANCE SCHEDULE

Minimum Recommended Maintenance Intervals

Maintenance Procedure	Every 50 hrs	Every 100hrs	Every 200hrs	Every 400hrs	Every 800hrs
Check Battery Fluid Level					
Check Battery Cable Connections					
Service Air Filter					
Lubricate All Grease Fittings					
† Change Engine Oil					
† Check Fan/Alternator Belt Tension					
† Replace Engine Oil Filter					
Replace Air Filter Element					
Torque Wheel Lug Nuts					
Replace Fuel Filter/Water Separator					
‡ Torque Heads and Adjust Valves					
Replace Hydraulic Oil					
‡ Replace Hydraulic Oil Filter					
‡ Check Engine RPM (idle and full throttle)					

† Initial break in at 8 hours

‡ Initial break in at 50 hours

Replace Moving Hoses
Replace Safety Switches
Fuel Tank – Drain/Flush
Hydraulic Tank – Drain/Flush
Cooling System – Drain/Flush

Annual Recommendations:
Items listed are recommended every 2000 hours or 2 years, whichever occurs first.

IDENTIFICATION AND ORDERING

MODEL AND SERIAL NUMBER

The mower has two identification numbers: a model number and a serial number. The two numbers are stamped into a plate that is riveted to the left frame rail under seat. In any correspondence concerning the mower, supply the model and serial numbers to assure that correct information and replacement parts are obtained.

Note: Do not order by reference number if a parts catalog is being used; use the part number.

To order replacement parts from an Authorized TORO Service Dealer, supply the following information:

1. Model and serial numbers of the mower.

2. Part number, description and quantity of part(s) desired.

NOTES

The Toro Commercial Products Two Year Limited Warranty

The Toro Company warrants your 1996 or newer Toro Commercial Product ("Product") purchased after January 1, 1997, to be free from defects in materials or workmanship for the period of time listed below. Where a warrantable condition exists, Toro will repair the Product at no cost to you including diagnosis, labor, parts, and transportation. This warranty begins on the date the Product is delivered to the original retail purchaser.

Warranty Duration: Two years or 1500 operational hours*, whichever occurs first.
***Product equipped with hour meter**

Owner Responsibilities:

As the Product owner, you are responsible for required maintenance and adjustments stated in your Owner's Manual. Failure to perform required maintenance and adjustments can be grounds for disallowing a warranty claim.

Instructions for Obtaining Warranty Service:

You are responsible for notifying the Commercial Products Distributor or Authorized Commercial Products Dealer from whom you purchased the Product as soon as you believe a warrantable condition exists.

If you need help locating a Commercial Products Distributor or Authorized Dealer, or if you have questions regarding your warranty rights or responsibilities, you may contact us at:

Toro Commercial Products Service Department
8111 Lyndale Avenue South
Minneapolis, MN, 55420−1196
Telephone: (612) 888−8801
Facsimile: (612) 887−8258
E−Mail: Commercial.Service@Toro.Com

Maintenance Parts:

Parts scheduled for replacement as required maintenance ("Maintenance Parts"), are warranted for the period of time up to the scheduled replacement time for that part.

Items/Conditions Not Covered:

Not all product failures or malfunctions that occur during the warranty period are defects in materials or workmanship. The items / conditions listed below are not covered by this warranty:

- Product failures which result from the use of non−Toro replacement parts, or from installation and use of add−on, modified, or unapproved accessories are not covered.
- Product failures which result from failure to perform required maintenance and/or adjustments are not covered.
- Product failures which result from operating the Product in an abusive, negligent or reckless manner are not covered.
- This warranty does not apply to parts subject to consumption through use unless found to be defective. Examples of parts which are consumed, or used up, during normal Product operation include, but are not limited to, blades, reels, bedknives, tines, spark plugs, castor wheels, tires, filters, belts, etc.
- This warranty does not apply to failures caused by outside influence. Items considered to be outside influence include, but are not limited to, weather, storage practices, contamination, use of unapproved coolants, lubricants, additives, or chemicals, etc.
- This warranty does not apply to normal "wear and tear" items. Normal "Wear and Tear" includes, but is not limited to, damage to seats due to wear or abrasion, worn painted surfaces, scratched decals or windows, etc.

Other Legal Disclaimers:

The above remedy of product defects through repair by an authorized distributor or dealer is the purchaser's sole remedy for any defect. This warranty gives you specific legal rights, and you may also have other rights which vary from state to state.

Except for the Emissions warranty referenced below, if applicable, there is no other express warranty. All implied warranties of merchantability and fitness for use are limited to the duration of the express warranty.

Some states do not allow limitations on how long an implied warranty lasts, so the above limitation may not apply to you.

The Toro Company is not liable for indirect, incidental or consequential damages in connection with the use of the Product, including any cost or expense of providing substitute Product or service during periods of malfunction or non−use.

Some states do not allow the exclusion of incidental or consequential damages, so the above exclusion may not apply to you.

Note to California residents: The Emissions Control System on your Product may be covered by a separate warranty meeting requirements established by the U.S. Environmental Protection Agency (EPA), or the California Air Resources Board (CARB). The hour limitations set forth above do not apply to the Emissions Control System Warranty. Refer to the California Emission Control Warranty Statement printed in your Owner's Manual or contained in the engine manufacturer's documentation for details.