FORM NO. 3322–177

TORO®

MODEL NO. 30551 – 90001 & Up
MODEL NO. 30551 TE – 90001 & Up

OPERATOR'S MANUAL

62" SIDE DISCHARGE CUTTING DECK

FOR GROUNDSMASTER 200 SERIES TRACTION UNITS

To assure maximum safety, optimum performance, and to gain knowledge of the product, it is essential that you or any other operator of the machine read and understand the contents of this manual before the engine is ever started. Pay particular attention to the SAFETY INSTRUCTIONS highlighted by this symbol —



The safety alert symbol means CAUTION, WARNING or DANGER — personal safety instruction. Failure to comply with the instruction may result in personal injury.

TORO®
THIS UNIT CONFORMS TO ANSI/OPEI B71.4–1990

The Groundsmaster 200 Series Traction unit with a 62" Side Discharge Deck conforms to the American National Standards Institute's safety standards for Riding Mowers when weights are installed according to chart on page 10.



© The TORO Company – 1998

FOREWORD

The 62" cutting deck has advanced concepts in engineering, design and safety; and if maintained properly, will give excellent service.

Since this is a high−quality product, Toro is concerned about the future use of the machine and safety of the user. Therefore, read this manual to familiarize yourself with proper set−up, operation and maintenance instructions. The major sections of the manual are:

1. Safety Instructions
2. Set−up Instructions
3. Before Operating
4. Lubrication
5. Maintenance

Certain information in this manual is emphasized. DANGER, WARNING and CAUTION identify personal safety related information. IMPORTANT identifies mechanical information demanding special attention. Be sure to read this directive because it deals with the possibility of damaging a part or parts of the machine. NOTE identifies general information worthy of special attention.

TABLE OF CONTENTS

	Page
SAFETY INSTRUCTIONS	3−4
SAFETY AND INSTRUCTION DECALS	5
SPECIFICATIONS	6
LOOSE PARTS	6
SET−UP INSTRUCTIONS	7−10
Install Castor Wheel Assemblies	7
Install Lift Arms to Traction Unit	7
Connect Lift Arms to Cutting Unit	8
Mount PTO Shaft Guard and Connect PTO Shaft to Cutting Unit Gear Box	8
Connect PTO Shaft to Cutting Unit Gear Box	8
Install Weight Transfer Kit	8
Install Rear Weight	10
BEFORE OPERATING	11−12
Adjusting Height−of−Cut	11
Adjusting Rollers & Gage Wheel	11
Check Lubricant In Gear Box	11
Grease Cutting Unit	12
OPERATING INSTRUCTIONS	13
Grass Deflector	13
Tension Spring Adjustment	13
LUBRICATION	14
Grease Bearings And Bushings	14
MAINTENANCE	15−21
Trouble Shooting	15
Separating Cutting Unit From Traction Unit	16
Mounting Cutting Unit To Traction Unit	16
Servicing Castor Arm Bushings	17
Servicing Castor Wheels and Bearings	17
Checking for Bent Blade	18
Replacing Cutter Blade	18
Checking Sail and Sharpening Cutter Blade	18
Correcting Cutting Unit Mismatch	19
Replacing Grass Deflector	20
Adjusting Cover Latches	20
Adjusting Idler Pulley	20
Replacing Drive Belt	20
IDENTIFICATION AND ORDERING	22
NOTES	23
WARRANTY	Back Cover

SAFETY INSTRUCTIONS



The safety alert symbol means CAUTION, WARNING or DANGER — "personal safety instruction". Read and under stand the instruction because it has to do with safety. Failure to comply with the instruction may result in personal injury.

The cutting unit has been tested and certified for compliance with the B71.4−1990 specifications of the American National Standards Institute. Although hazard control and accident prevention partially are dependent upon the design and configuration of the machine, these factors are also dependent upon awareness, concern, and proper training of the personnel involved in the operation, transport, maintenance, and storage of the machine. Improper use or maintenance of the machine can result in injury or death. To reduce the potential for injury or death, comply with the following safety instructions.

BEFORE OPERATING

1. Read and understand the contents of this Operator's Manual before operating the machine. Become familiar with all controls and know how to stop quickly. A free replacement manual is available by sending complete Model and Serial Number to:

The Toro Company
8111 Lyndale Avenue South
Bloomington, Minnesota 55420−1196

2. Never allow children to operate the machine. Do not allow adults to operate machine without proper instruction. Only trained operators who have read this manual should operate this machine.

3. Never operate the machine when under the influence of drugs or alcohol.

4. Remove all debris or other objects that might be picked up and thrown by the cutter blades. Keep all bystanders away from the mowing area.

5. Keep all shields and safety devices in place. If a shield, safety device or decal is illegible or damaged, repair or replace it before operation is commenced. Also tighten any loose nuts, bolts and screws to assure machine is in safe operating condition.

6. Do not operate machine while wearing sandals, tennis shoes, sneakers or shorts. Also, do not wear loose fitting clothing which could get caught in moving parts. Always wear long pants and substantial shoes. Wearing safety glasses, safety shoes and a helmet is advisable and required by some local ordinances and insurance regulations.

7. Check interlock switches daily for proper operation (Refer To Section in Traction Unit Operator's Manual on Checking Interlock Switches). Do not rely entirely on safety switches -shut off engine before getting off seat. If a switch fails, replace it before operating the machine. The interlock system is for your protection, so do not bypass it. Replace all interlock switches every two years. Interlock switches should be adjusted so:

A. Engine cannot be started unless traction pedal is released (neutral position) and PTO lever is DISENGAGED (off position).

B. Engine stops if operator gets off seat when traction pedal is depressed.

C. Engine stops if operator gets off seat when PTO lever is ENGAGED (on position).

8. Fill fuel tank before starting the engine. Avoid spilling fuel. Since fuel is flammable, handle it carefully.

A. Use an approved fuel container.

B. Do not fill tank while engine is hot or running.

C. Do not smoke while handling fuel.

D. Fill fuel tank outdoors and up to about one inch (25 mm) from top of the tank, not the filler neck.

E. Wipe up any spilled fuel.

WHILE OPERATING

9. Do not run the engine in a confined area without adequate ventilation. Exhaust fumes are hazardous and could possibly be deadly.

10. Maximum seating capacity is one person. Never carry passengers.

11. Sit on the seat when starting the engine and operating the machine.

12. Before starting the engine:

A. Engage parking brake.

B. Ensure traction pedal is in neutral and PTO is in the OFF, disengaged position.

C. After engine is started, release parking brake and keep foot off traction pedal. Machine must not move. If movement is evident, the neutral return mechanism is adjusted incorrectly; therefore, shut engine off and adjust until machine does not move when traction pedal is released.

13. Using the machine demands attention, and to prevent loss of control:

A. Mow only in daylight or when there is good artificial light.

B. Watch for holes or other hidden hazards.

C. Do not drive close to a sand trap, ditch, creek or other hazard.

D. Reduce speed when making sharp turns and when turning on hillsides.

E. Avoid sudden starts and stops.

F. Before backing up, look to the rear and assure no one is behind the machine.

G. Watch out for traffic when near or crossing roads. Always yield the right−of −way.

H. The cutting deck must be lowered when going down slopes for steering control.

14. The grass deflector must always be installed and in lowest position on the side discharge cutting unit. Never operate mower without deflector or entire grass collector. This product is designed to drive objects into the ground where they lose energy quickly in grassy areas. **However, don't take an injury risk!!** When a person or pet appears unexpectedly in or near the mowing area, **STOP MOWING.** Careless operation, combined with terrain angles, ricochets, or improperly positioned guards, can lead to thrown object injuries. Do not resume mowing until area is cleared. If the cutting unit discharge area ever plugs, shut engine off before removing the obstruction.

15. Never raise the cutting unit while the blades are rotating.

16. If the cutting blades strike a solid object or the machine vibrates abnormally, shut the engine off. Remove spark plug wire from spark plug to prevent possibility of accidental starting. Check cutting unit and traction unit for damage and malfunctioning parts. Repair any damage before restarting the engine and operating the cutting unit. Be sure blades are in good condition and blade bolts are tight.

17. Cut grass slopes carefully. Do not start, stop, or turn suddenly.

18. Do not touch engine or muffler while engine is running or soon after it is stopped. These areas could be hot enough to cause a burn.

19. Before getting off the seat:

A. Move traction pedal to neutral position and remove foot from pedal.

B. Set the parking brake and disengage the PTO.

C. Shut the engine off and remove the key from the ignition switch. Wait for all movement to stop before getting off the seat.

20. Lower the cutting unit to the ground and remove key from ignition switch whenever machine is left unattended.

MAINTENANCE

21. Remove key from ignition switch to prevent accidental starting of the engine when servicing, adjusting or storing the machine.

22. Perform only those maintenance instructions described in this manual. If major repairs are ever needed or assistance is desired, contact an Authorized TORO Distributor.

23. To reduce potential fire hazard, keep the engine free of excessive grease, grass, leaves and accumulations of dirt.

24. Be sure machine is in safe operating condition by keeping nuts, bolts and screws tight. Check the blade mounting bolts and nuts frequently to be sure they are tightened to specification.

25. Make sure all hydraulic line connectors are tight, and all hydraulic hoses and lines are in good condition before applying pressure to the system.

26. Keep body and hands away from pin hole leaks in hydraulic lines that eject high pressure hydraulic fluid. Use cardboard or paper to find hydraulic leaks. Hydraulic fluid escaping under pressure can penetrate skin and cause injury. Fluid accidentally injected into the skin must be surgically removed within a few hours by a doctor familiar with this form of injury or gangrene may result.

27. Before disconnecting or performing any work on the hydraulic system, all pressure in system must be relieved by stopping engine and lowering cutting unit to the ground.

28. If the engine must be running to perform a maintenance adjustment, keep hands, feet, clothing and other parts of the body away from the cutting unit blades and other moving parts.

29. Do not overspeed the engine by changing governor settings. To be sure of safety and accuracy, have an Authorized TORO Distributor check maximum engine speed with a tachometer.

30. Engine must be shut off before checking oil or adding oil to the crankcase.

31. Allow engine to cool before storing mower in any enclosure such as a garage or storage shed. Make sure the mower fuel tank is empty if machine is to be stored in excess of 30 days. Do not store mower near any open flame or where gasoline fumes may be ignited by a spark. Always store gasoline in a safety−approved, red metal container.

32. To ensure optimum performance and safety, always purchase genuine TORO replacement parts and accessories to keep the Toro all TORO. NEVER USE "WILL−FIT" REPLACEMENT PARTS AND ACCESSORIES MADE BY OTHER MANUFACTURERS. Look for the TORO logo to assure genuineness. Using unapproved replacement parts and accessories could void the warranty of The Toro Company.

SAFETY AND INSTRUCTION DECALS

The following decals are installed on the machine. If any become damaged or illegible, replace it. The decal part number is listed below and in your parts catalog. Replacement can be ordered from your Authorized Toro Distributor.



ON BOTH SIDES OF CUTTING UNIT
(Part No. 66−1340)
(Part No. 93−7824 for CE)

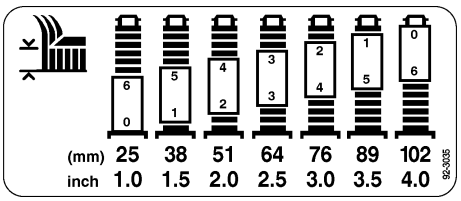

ON LEFT SIDE OF CASTOR ARM
(Part No. 92−3035)

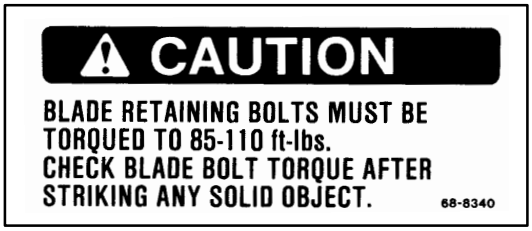

ON LEFT SIDE OF CUTTING UNIT
(Part No. 68−8340)
(Part No. 93−7818 for CE)

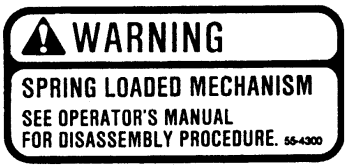

ON SPRING COVERS
(Part No. 55−4300)
(Part No. 93−6696 for CE)



ON DEFLECTOR
(Part No. 54−9220)
(Part No. 93−7316 for CE)



ON LEFT, CENTER AND RIGHT SIDES
OF DECK, UNDER SHIELDS
(Part No. 67−5360)
(Part No. 93−7273 for CE)



UNDER DEFLECTOR
(Part No. 66−6380)
(Part No. 93−7828 for CE)

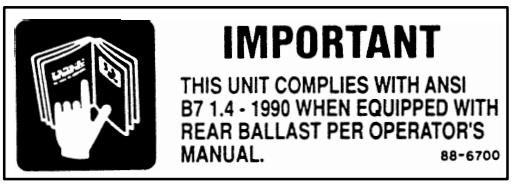

ON REAR CENTER OF CUTTING UNIT
(Part No. 88−6700)
(Part No. 93−8074 for CE)



ON GEAR BOX BRACKET
(Part No. 70−2560)
(Part No. 93−6697 for CE)

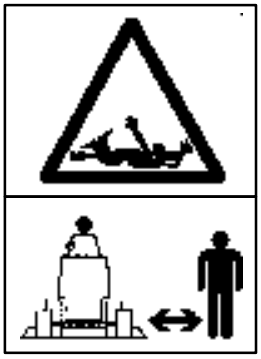

ON PTO COVER
(Part No. 93−7283)
(Model 30551 TE only)



ON LEFT SIDE OF CUTTING UNIT
(Part No. 43−8480)
(Part No. 93−7815 for CE)

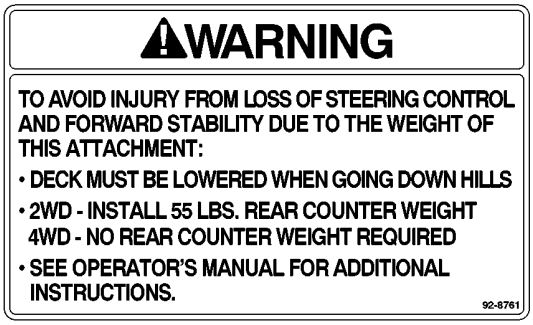

ON LEFT SIDE OF CUTTING UNIT
(Part No. 92−8761)
(Part No. 93−7811 for CE)

SPECIFICATIONS

Width of Cut: 61−5/8 in. (1.56 m).

Height of Cut: Adjustable from 1" to 4" (25 to 102 mm) in 1/2" (13 mm) increments.

Blade Tip Speed: 15,480 ft/min. @ 3250 engine rpm.

Cutter Blades: Three heat treated steel blades, each 3/16 in. (4.8 mm) thick and 24−3/4" (55 mm) long.

Unit Drive System : PTO driven gear box transmits power through a "AA" section belt to all blade spindles.

Castor Wheels:

Front − 8 in. (203 mm) dia. pneumatic wheels with greaseable roller bearings. (Inflation 35−50 P.S.I.)

Rear − 6 in. (152 mm) dia. hard rubber wheels with greaseable roller bearings.

Optional Equipment:

62" Front Baffle Kit: Part No. 99−5151 (For Dry Conditions)

Leaf Mulcher: Model 30792

Leaf Mulcher Discharge Plate: Part No. 57−0700

High Lift Blades: Part No. 77−6710

Grass Collection System: Model 30506 Blower Kit used with Model 30504 Hopper Kit or Model 30505 Dump Kit.

Note: Model 30505 only fits Models 30223, 30224, 30225, 30230 and 30243. Model 30504 only fits Models 30223, 30230 and 30225.

Phenolic Caster Wheels: Part No. 27−1050 use with Spanner Part No. 69−8980 or order Part No. 40−0370 Caster Fork and 3/4" bolts Part No. 328−9.

Specifications and design subject to change without notice.

LOOSE PARTS

NOTE: Use this chart as a checklist to assure all parts have been received. Without these parts, total set−up cannot be completed.

DESCRIPTION	QTY.	USE
Front Castor Wheel Assembly Rear Castor Wheel Assembly	2 2	Install Castor Wheel Assemblies.
R.H. Lift Arm L.H. Lift Arm Pivot Pin Assembly Cotter Pin 5/32" x 1−3/4" lg.	1 1 2 2	Mount to Traction Unit Pivot Brackets
Capscrews 7/16 − 14 x 3" lg. Flange Nuts 7/16 − 14	4 4	Connect Lift Arms to Cutting Unit.
Mounting Bracket Lock Pin Assembly Self Tapping Screw Spring Cover Assembly Clevis Pin Hair Pin Cotter Spring End−Top Extension Spring−Heavy (L.H. Side) Extension Spring−Light (R.H. Side) Spring End−Lower Knee Link Capscrew 3/8−16 x 2−1/4" lg. Capscrew 3/8−16 x 1" lg. Shoulder Bolt Flatwasher Locknut 3/8−16	2 4 4 2 2 2 2 1 1 2 2 4 4 4 4 12	Mount Weight Transfer Kit
Decals	12	Replace on CE Model
Operator's Manual Parts Catalog	1 1	Read Before Operating Machine.
Registration Card	1	Fill out and return to Toro

SET−UP INSTRUCTIONS

DANGER

Do not start the engine and engage the PTO lever when PTO shaft is not connected to cutting unit gear box because the PTO shaft will rotate with enough force to cause serious injury.

INSTALL CASTOR WHEEL ASSEMBLIES

(Fig. 1 & 2)

The thrust washers, spacers and tensioning caps have been installed on the castor wheel spindles for shipping.

1. Remove tensioning caps from spindle shafts and slide off spacers and thrust washers.

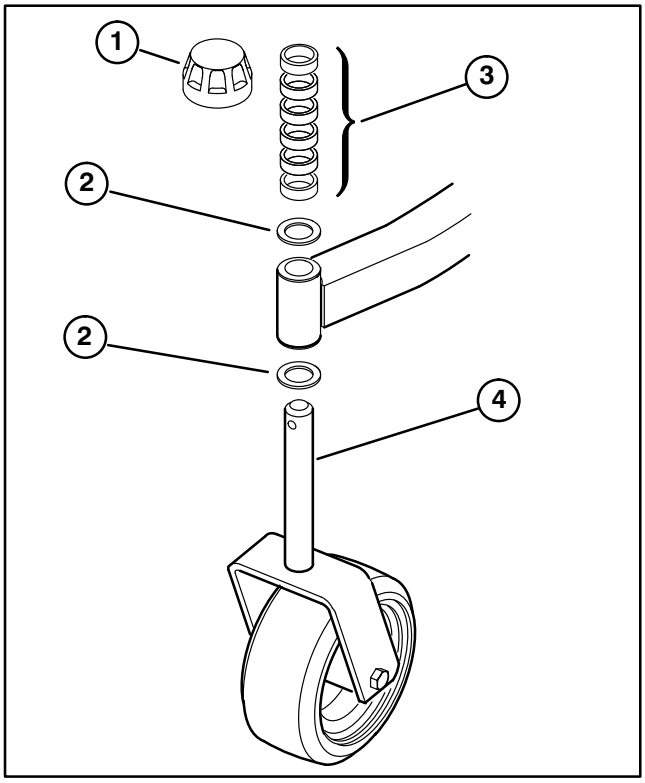

Figure 1

1. Tensioning cap **3. Spacers**
2. Thrust washers **4. Front castor spindle**

2. Slide spacers onto castor spindle to get desired height−of−cut: refer to Height−of−Cut Chart, Page 11**.** Slide a thrust washer onto spindle, push round castor spindle through front castor arm and hex castor spindle through rear castor arm. Install another thrust washer and remaining spacers onto spindle and install tensioning cap to secure assembly.

IMPORTANT: Thrust washers − not the spacers − must contact the top and bottom of the castor arm.

3. Assure all four castor wheels are set at same height−of−cut and roll cutting unit off pallet.

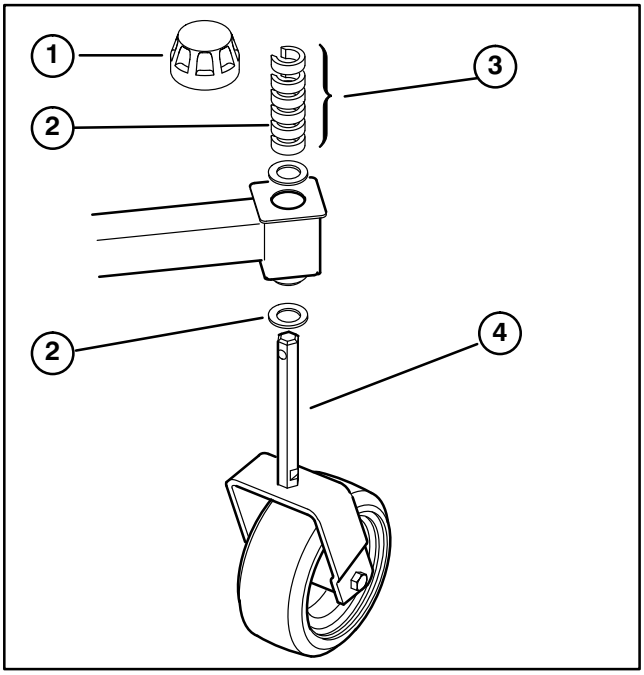

Figure 2

1. Tensioning cap **3. Spacers**
2. Thrust washers **4. Rear castor spindle**

INSTALL LIFT ARMS TO TRACTION UNIT

(Fig. 3)

1. On one side of the traction unit, loosen (do not remove) the wheel nuts securing wheel and tire assembly to front wheel studs.

2. Jack up machine until the front wheel is off the floor. Use jack stands or block the machine to prevent it from falling accidentally.

3. Remove wheel nuts and slide wheel and tire assembly off studs.

4. Mount a lift arm to pivot bracket with a pivot pin and 5/32" x 1−3/4" lg. cotter pin. Lift arm to be mounted with ball joint end positioned outward.

5. Mount rear of lift arm to lift cylinder with pivot pin and (2) cotter pins (supplied with traction unit).

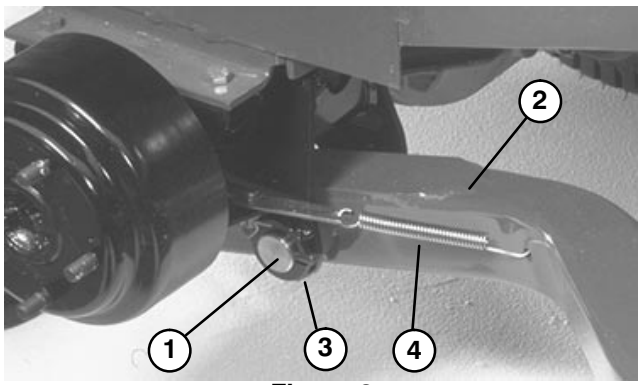

Figure 3

1. Pivot pin **3. Lift arm pivot bracket**
2. Lift arm **4. Brake return spring**

6. Hook brake return spring to hole in lift arm.

7. Repeat procedure on opposite side of machine.

SET–UP INSTRUCTIONS

CONNECT LIFT ARMS TO CUTTING UNIT (Fig. 4–5)

1. Move cutting unit into position in front of traction unit.

2. Measure distance from end of each lift arm to center of ball joint (grease fitting). Distance should be 2.25". If distance is not 2.25", loosen jam nut securing ball joint to lift arm and rotate ball joint in or out until distance is attained. Do not tighten jam nuts at this time.

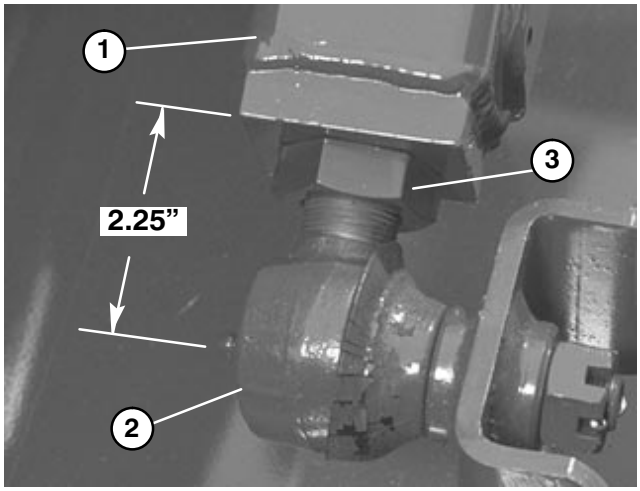

Figure 4
1. Lift Arm
2. Ball Joint
3. Jam Nut

3. Move lift lever to FLOAT position. Push lift arms down until holes in ball joint mounts line up with holes in castor arms.

4. Secure ball joint mounts to each castor arm with (2) 7/16 – 14 x 3" lg. capscrews, and 7/16 – 14 flange nuts (Flg. 5).

Note: Ball joint mount to be above castor arm when assembled.

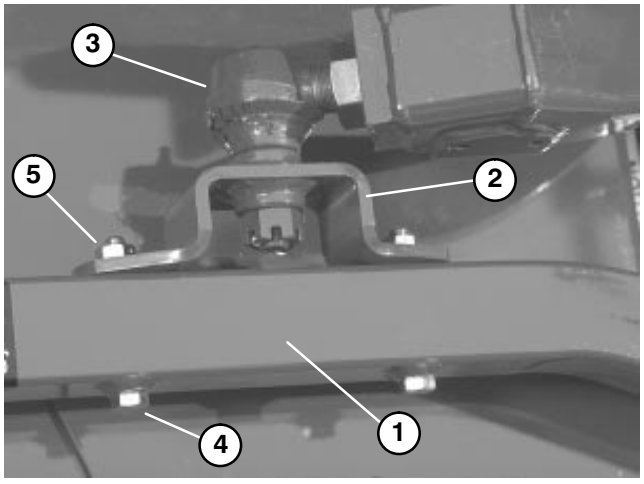

Figure 5
1. Castor Arm
2. Ball Joint Mount
3. Ball Joint
4. Capscrew
5. Flangenut

5. Tighten large jam nut securing ball joint to lift arm (Flg. 5). When tightening jam nut, hold ball joint straight to permit proper oscillation during raising and lowering of cutting unit.

MOUNT PTO SHAFT GUARD AND CONNECT PTO SHAFT TO CUTTING UNIT GEAR BOX (Model 30551 TE Only) (Fig. 6)

1. Remove (2) capscrews and lockwashers securing PTO guard mounting brackets to gearbox (Fig. 6) . Retain fasteners for re–installation.

2. Slide PTO shaft guard onto PTO shaft, positioning guard as shown in figure 6.

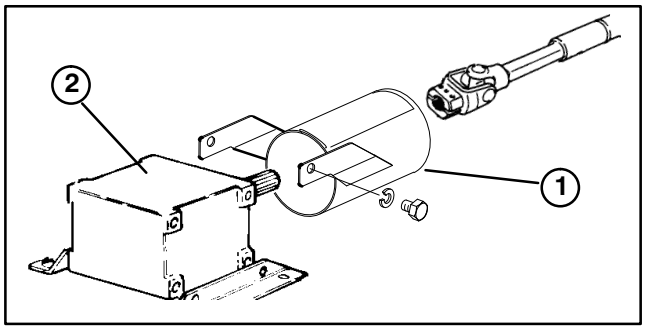

Figure 6
1. PTO Guard
2. Gearbox

3. Slide male PTO shaft into female PTO shaft. Align mounting holes in gear case input shaft with holes in PTO shaft and slide together.

4. Secure with roll pin.

5. Tighten capscrews and nuts.

6. Re–install PTO shaft guard to gearbox with (2) capscrews and lockwashers previously removed.

CONNECT PTO SHAFT TO CUTTING UNIT GEAR BOX (Fig. 7)

1. Slide male PTO shaft into female PTO shaft. Align mounting holes in gear case input shaft with holes in PTO shaft and slide together.

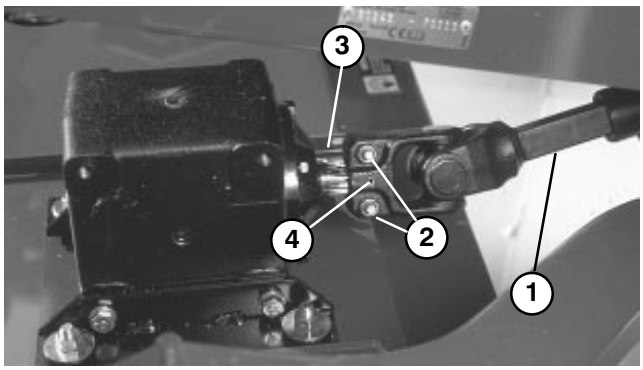

Figure 7
1. PTO shaft
2. Bolts and locknuts
3. Gearcase input shaft
4. Roll pin

SET−UP INSTRUCTIONS

2. Secure with roll pin.

3. Tighten capscrews and nuts.

INSTALL WEIGHT TRANSFER KIT

(Fig. 8−12)

1. Fully raise the cutting deck, set the parking brake, rotate the ignition key to OFF and remove key from ignition switch.

2. Place blocks under the cutting deck to prevent it from falling during assembly.

Note: Mounting brackets for weight transfer kit must be installed in different locations depending on the cutting deck. Refer to figure 8 for mounting location.

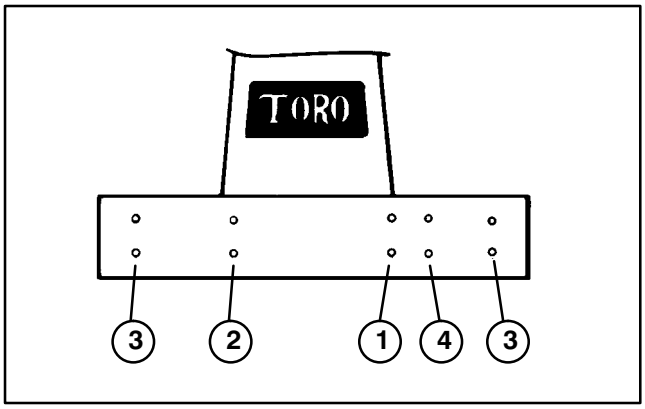

Figure 8

1. **52" side discharge deck**
2. **52" deck w/bagger**
3. **62" & 72" decks**
4. **52" rear discharge deck**

3. To install the mounting brackets, insert (2) 3/8−16 x 1" lg. flangehead capscrews through the slotted bracket holes. Thread the screws into the captivated frame nuts and torque to 45−50 ft−lb (Fig. 9).

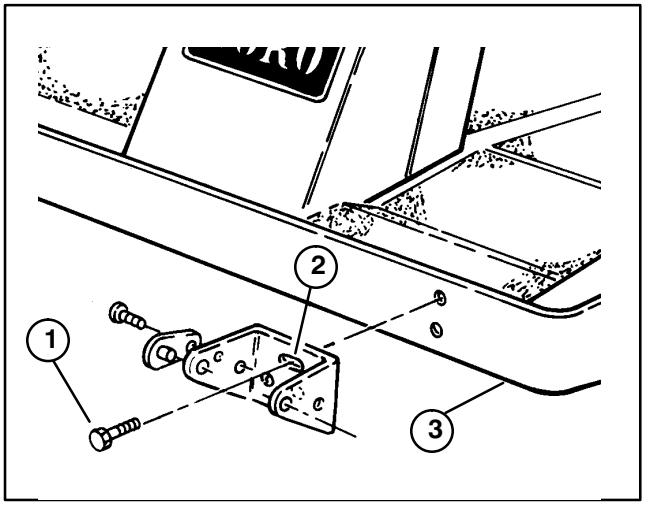

Figure 9

1. **Flangehead capscrew**
2. **Slotted hole**
3. **Frame**

4. Thread the top extension spring coil into the top spring end holes and the bottom extension spring coil into the bottom spring end holes (Fig. 10).

5. Mount knee link to lower spring end with wide part of knee link pointing forward and spring end stop pointing forward. Secure knee link to outer side of spring end with a shoulder bolt, washer and locknut (Fig. 10, 11).

IMPORTANT: The knee link must be assembled pointing in the proper direction or spring will not pivot correctly when deck is raised.

6. Mount bottom of knee link to deck bracket with a shoulder bolt and locknut. Use the heavy rate extension on the left hand side (large diameter spring wire) and the light rate extension spring on the right, discharge side (small diameter spring wire).

7. Align slotted holes in the spring cover (slot toward the bottom) with the mounting bracket holes. Insert lock pin assemblies into the bracket holes and secure each to the bracket with self−tapping screws (Fig. 10). Torque the screws to 20 ft−lb.

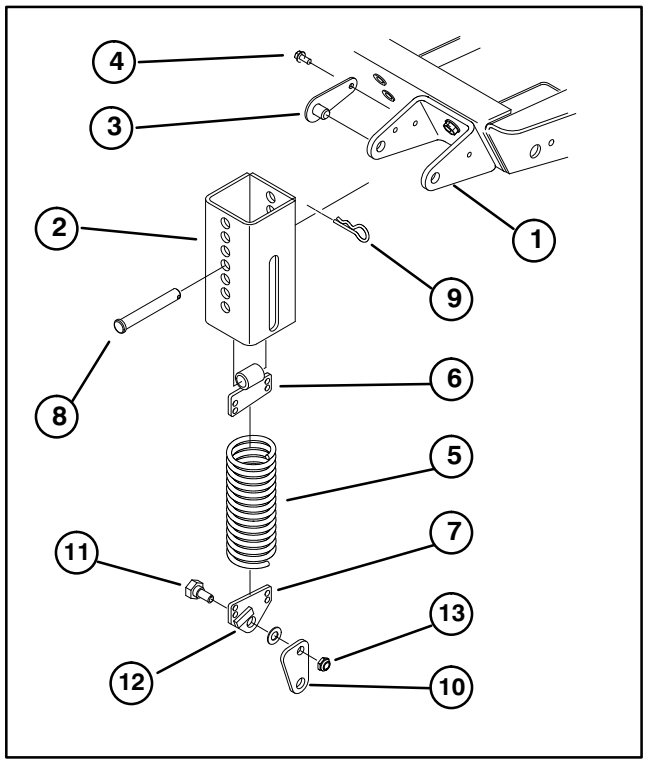

Figure 10

1. **Mounting bracket**
2. **Spring cover**
3. **Lock pin assembly**
4. **Self tapping screw**
5. **Extension spring**
6. **Top spring end**
7. **Bottom spring end**
8. **Clevis pin**
9. **Hair pin cotter**
10. **Knee link**
11. **Shoulder bolt**
12. **Spring end stop**
13. **Locknut (2)**

SET−UP INSTRUCTIONS

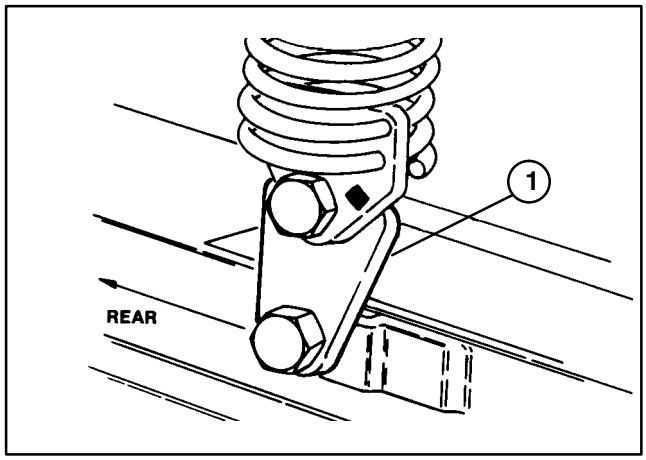

Figure 11

1. **Wide part of knee link**

8. From the bottom, insert the spring and top spring end into the spring cover. Select a hole that matches the cutter deck height−of−cut setting; i.e., top cover hole matches the highest height setting, bottom cover hole the lowest, etc. Align the top spring end hole with the selected spring cover holes and insert the clevis pin to secure the spring inside the cover (Fig. 10). Secure clevis pin with a hair pin cotter.

9. Remove the blocks from under the cutting unit. Make final counterbalance adjustments under actual cutting conditions; refer to Tension Spring Adjustment, page 13.

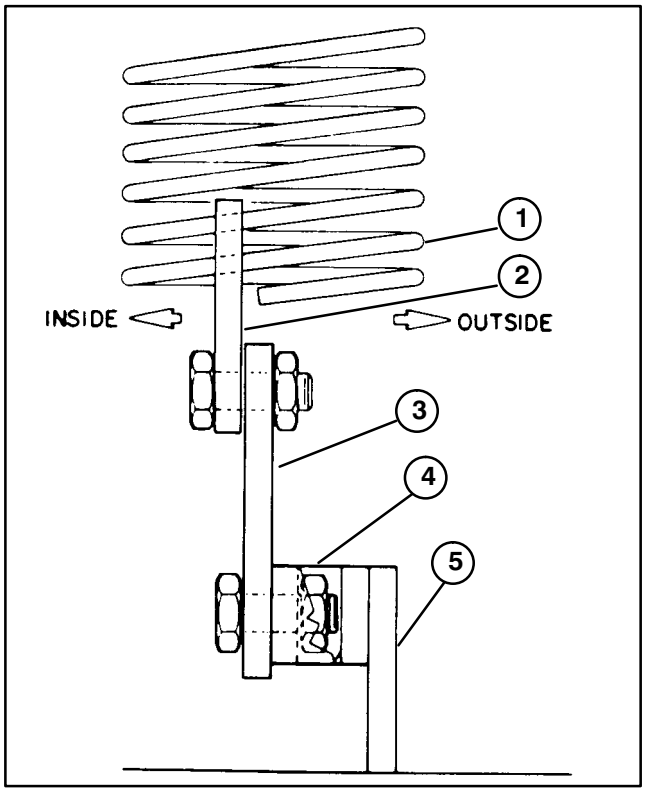

Figure 12

1. **Weight transfer spring**
2. **Spring end plate**
3. **Knee link bracket**
4. **Deck bracket**
5. **Deck frame**

INSTALL REAR WEIGHT

Two Wheel Drive Groundsmaster 200 Series Traction Units comply with ANSI B71.4−1990 Standard when equipped with rear weight. Use chart below to determine combinations of weight required. Order parts from your local Authorized Toro Distributor.

Four Wheel Drive Groundsmaster 200 Series Traction Units do not need additional rear weight to comply with ANSI B71.4−1990 Standard.

	Rear Weight Required	Weight Part Number	Weight Description	Qty.
62" Side Discharge Deck	**55 lb.**	**24−5790**	**Rear Weight − 35 lb.**	**1**
		325−8	**Capscrew − 1/2−13 x 2"**	**2**
or		**3253−7**	**Lockwasher − 1/2**	**2**
62" Side Discharge Deck with 9 cu. ft. Hopper		**3−8847**	**Spacer**	**2**
		3217−9	**Nut − 1/2**	**2**
		&		
		92−8763 (includes one−20 lb. weight and hardware)	**Weight Kit − 20 lb.**	**1**
62" Side Discharge Deck with 15 cu. ft. Hopper	**0 lb.***			
*** 75 lb. wheel weight (included with 15 cu. ft. Hopper) required on left wheel**				

BEFORE OPERATING

ADJUSTING HEIGHT−OF−CUT

(Fig. 13−14)

The height−of−cut is adjustable from 1 to 4 inches in 1/2 inch increments, by adding or removing an equal number of spacers from the front and rear castor forks. The height−of−cut chart below gives the combinations of spacers to use for all height−of−cut settings.

Height−of−Cut Chart

Height−of−Cut Setting	Spacers Below Castor Arm	
	Front	Rear
1 inch	0	0
1−1/2 inch	1	1
2 inch	2	2
2−1/2 inch	3	3
3 inch	4	4
3−1/2 inch	5	5
4 inch	6	6

1. Start the engine and raise the cutting unit so height−of−cut can be changed. Stop engine after cutting unit is raised.

FRONT CASTOR WHEELS

1. Remove tensioning cap from spindle shaft and slide spindle out of front castor arm. Remove washer from spindle shaft. Slide spacers onto spindle shaft to get desired height−of−cut, then slide washer onto shaft.

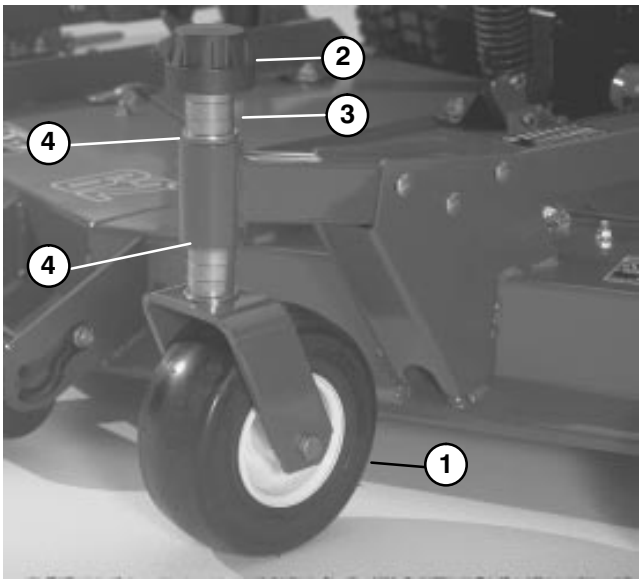

Figure 13
1. Front Castor Wheel
2. Tensioning cap
3. Spacers
4. Thrust Washers

2. Push castor spindle through front castor arm, install other thrust washer and remaining spacers onto spindle and install tensioning cap to secure assembly.

REAR CASTOR WHEELS

1. Remove tensioning cap from spindle shaft.

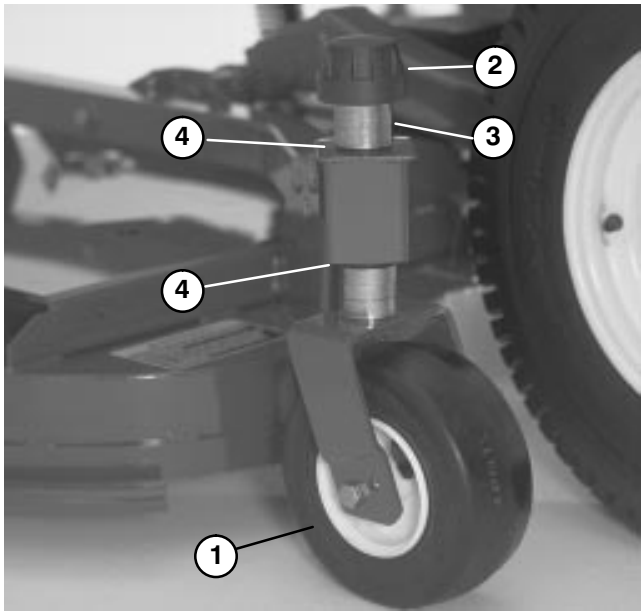

Figure 14
1. Rear Castor Wheel
2. Tensioning cap
3. Spacers
4. Thrust Washers

Note: Rear castor fork assembly does not need to be removed from castor arm to change height−of−cut.

2. Remove or add "C" shaped spacers at the narrow portion of the spindle shaft, below castor arm, to get desired height−of−cut. Make sure thrust washers – not the spacers – contact the top and bottom of the castor arm.

3. Install tensioning cap to secure assembly .

4. Assure all four castor wheels are set at same height−of−cut.

ADJUSTING ROLLERS & GAGE WHEEL

Note: If cutting unit is to be used in 1 in. or 1−1/2 in. height−of−cut setting, cutting unit rollers must be repositioned in the top bracket holes.

To adjust front roller (Fig. 15):

1. Remove capscrew and nut securing roller shaft to cutting unit bracket (Fig. 15).

2. Slide shaft out of lower bracket holes, align roller with top holes and install shaft.

3. Secure roller shaft to cutting unit bracket with capscrew and nut.

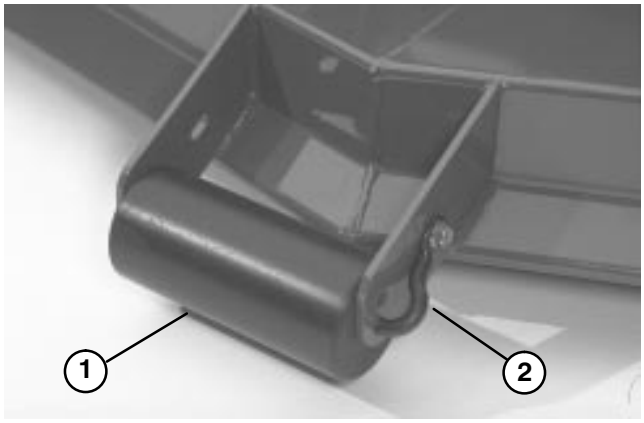

Figure 15

1. External Roller
2. Roller Shaft

To adjust front gage wheel (Fig. 16):

1. Remove capscrew and nut securing gage wheel to cutting unit brackets.

2. Align roller and spacer with top holes in brackets and secure with capscrew and nut.

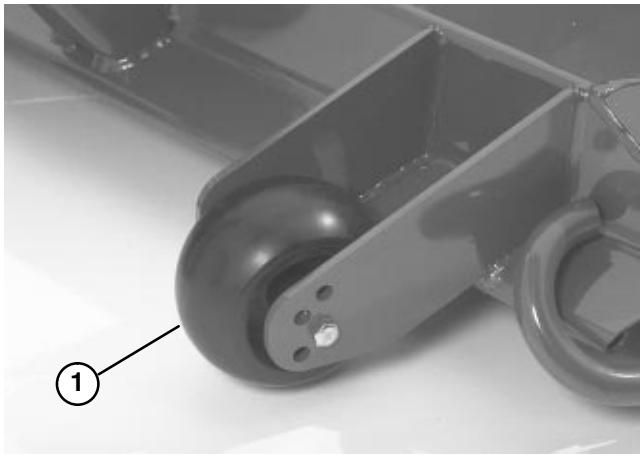

Figure 16

1. Gage Wheel

To adjust rear (internal) rollers (Fig. 17):

1. Remove cotter pins securing roller shafts to brackets on underside of deck.

2. Slide shafts out of lower bracket holes, align rollers with top holes and install shafts.

3. Install cotter pins to secure assemblies.

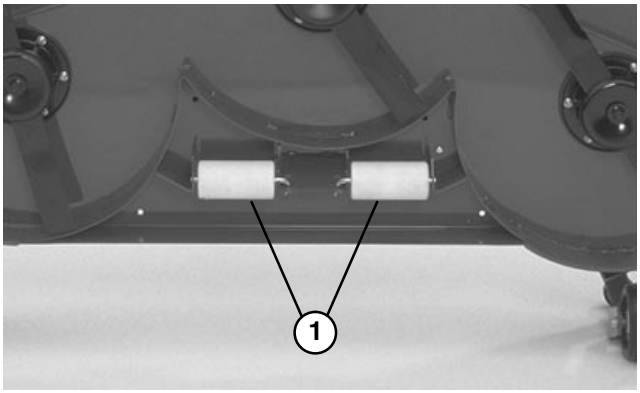

Figure 17

1. Internal rollers

CHECK LUBRICANT IN GEAR BOX

(Fig. 18)

The gear box in designed to operate on SAE 80–90 wt. gear lube. Although the gear box is shipped with lubricant from the factory, check the level before operating the cutting unit.

1. Position the machine and cutting unit on a level surface.

2. Remove check plug from side of gear box and make sure lubricant is up to bottom of hole. If level of lubricant is low, remove fill plug on top of gear case and add enough lubricant to bring it up to bottom of hole in side.

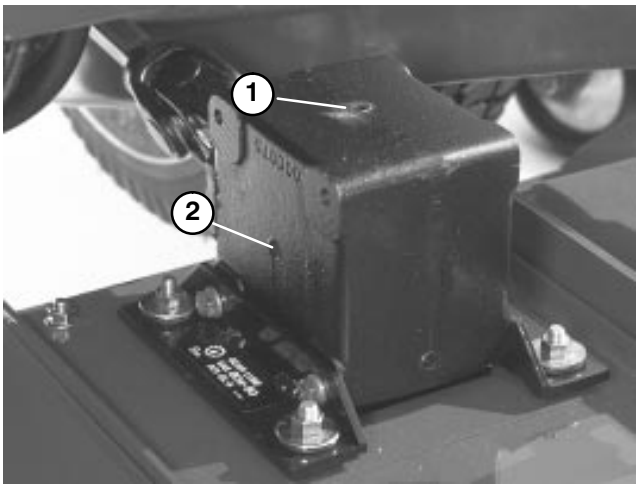

Figure 18

1. Filler Plug 2. Check Plug

GREASE CUTTING UNIT

Before the cutting unit is operated, it must be greased to assure proper lubricating characteristics: refer to Lubrication, page 14. Failure to properly grease the cutting unit will result in premature failure of critical parts.

OPERATING INSTRUCTIONS

GRASS DEFLECTOR (Fig. 19)

WARNING

The grass deflector (Fig. 19) is a safety device that diverts grass and other foreign objects being discharged downward. WE STRONGLY RECOMMEND THAT THE DEFLECTOR BE IN ITS NORMAL OPERATING POSITION WHENEVER THE CUTTING UNIT IS ENGAGED. NEVER OPERATE CUTTING UNIT WITH THE DEFLECTOR REMOVED FROM THE CUTTING UNIT OR IT TIED/BLOCKED IN A RAISED POSITION. SINCE THE BLADES COULD THEN THROW DEBRIS A CONSIDERABLE DISTANCE WITH SUFFICIENT FORCE TO CAUSE PERSONAL INJURY OR DAMAGE TO PROPERTY. If the grass deflector is damaged, repair or replace the affected part(s).

Note: The deflector is spring loaded into its downward normal operating position, but the operator can temporarily swing it out of the way to facilitate loading in a trailer or when otherwise necessary.

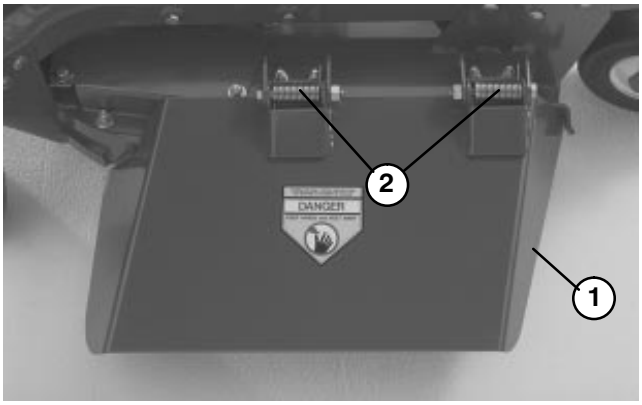

Figure 19

1. **Grass deflector**
2. **Springs**

TENSION SPRING ADJUSTMENT

For best performance, so cutting unit bounce on uneven turf is minimal and it does not ride heavily over flat terrain. If scalping occurs or the cut is uneven from side to side, there may too much weight on the deck and weight may have to be transferred to the traction unit: i.e. increased spring tension.

By contrast, if too much weight is transferred to the traction unit, the deck will bounce excessively and the cut will be uneven. If the cutting unit does not perform properly, adjust as follows:

1. Stop the machine on a level surface, set parking brake, fully raise cutting unit turn ignition key to OFF and remove key from switch.

2. Remove hair pin cotter from clevis pin securing spring end to spring cover and remove clevis pin. Align the top spring end hole with the new hole selected in the spring cover, insert clevis pin and secure with hairpin cotter.

3. Resume operations. If further adjustments are required repeat procedure.

CAUTION

Counterbalance spring(s) are in tension when deck is in lowered position. Always raise deck before adjusting or removing spring(s).

LUBRICATION

GREASE BEARINGS, BUSHINGS AND GEAR BOX (Fig. 20−23)

The cutting unit must be lubricated regularly. If machine is operated under normal conditions, lubricate castor bearings and bushings with No. 2 general purpose lithium base grease or molybdenum base grease, after every 8 hours of operation or daily, whichever comes first

1. The cutting unit has bearings and bushings that must be lubricated, and these lubrication points are: front castor spindle bushings (Fig. 20); front amd rear castor wheel bearings (Fig. 20); right and left lift arm pivot pins (Fig. 21): blade spindle bearings (Fig. 22): and right and left push arm ball joints (Fig. 22).

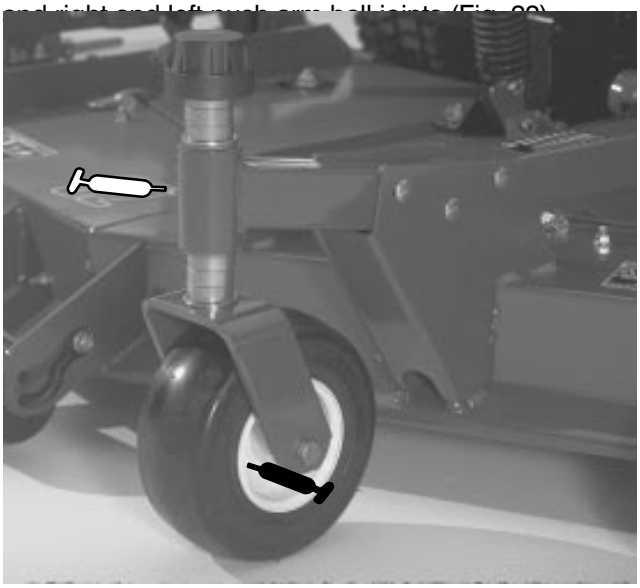

Figure 20

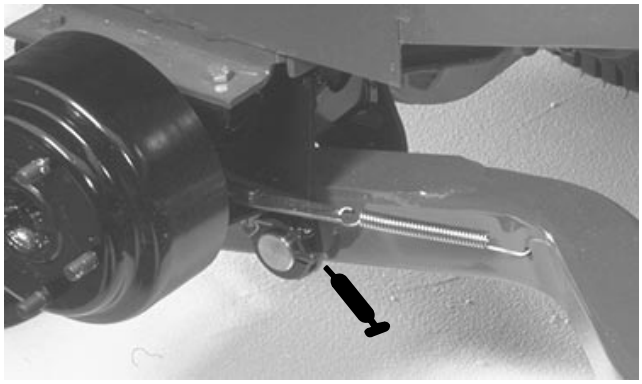

Figure 21

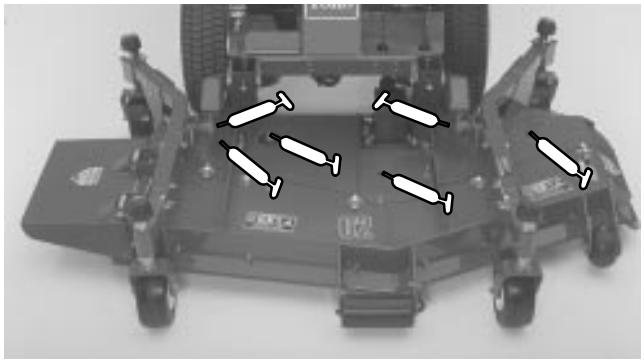

Figure 22

2. Position machine and cutting unit on a level surface and lower cutting unit. Remove check plug from side of gear box (Fig. 23) and make sure lubricant is up to bottom of hole. If level of lubricant is low, remove fill plug on top of gear case and add SAE 80−90 wt. gear lube until level is up to bottom of hole in side.

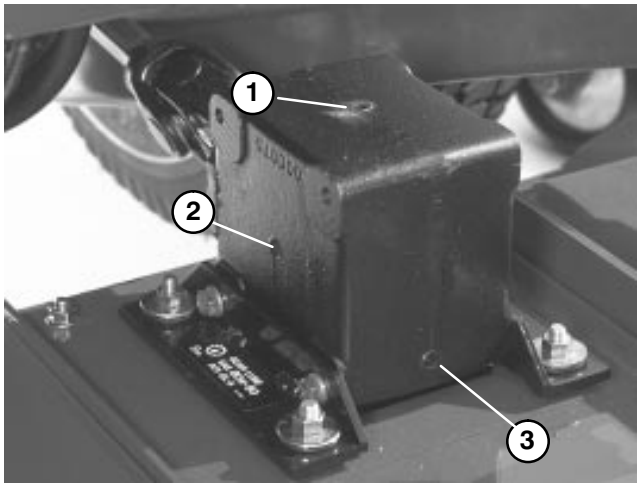

Figure 23

1. Filler Plug
2. Check Plug
3. Drain Plug

MAINTENANCE
TROUBLE SHOOTING

UNIT WILL NOT CUT OR CUTS POORLY

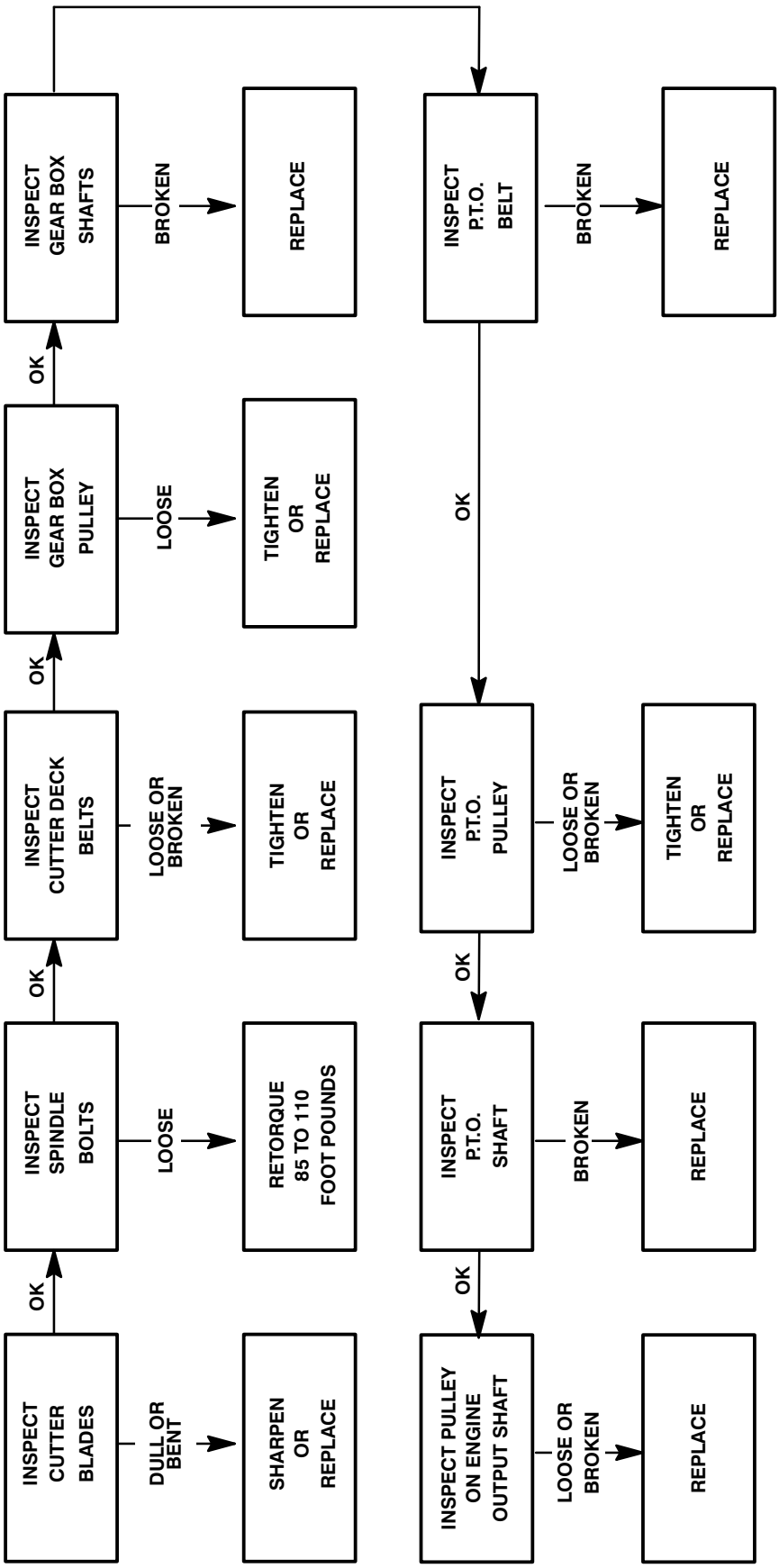

MAINTENANCE

SEPARATING CUTTING UNIT FROM TRACTION UNIT (Fig. 24–26)

1. Position machine on a level surface, raise cutting unit, engage parking brake, be sure traction pedal is in neutral position, PTO lever in OFF position, shut engine OFF and remove key from switch.

CAUTION

Counterbalance spring(s) are in tension when deck is in lowered position. Always raise deck before adjusting or removing spring(s).

2. Disconnect counterbalance from traction unit, remove lock pins from brackets, separate spring tension assemblies from brackets and lay them down on the deck. Loosely secure lock pins to brackets to prevent losing them (Fig. 24).

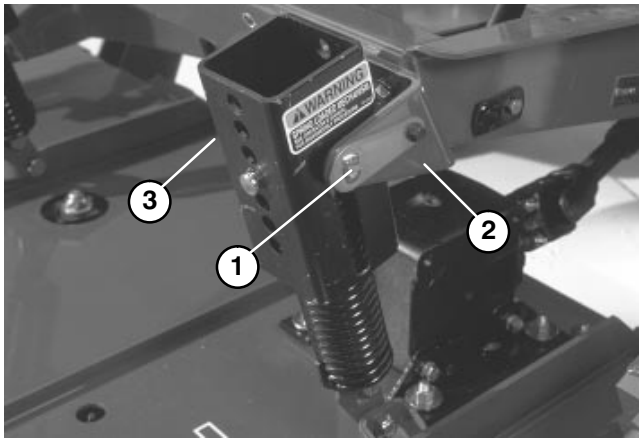

Figure 24
1. Lock pin
2. Bracket
3. Spring tension assembly

3. Position machine on level surface, lower cutting unit to floor, move lift lever to float position, shut engine off and engage parking brake.

4. Remove the capscrews and locknuts securing the ball joint mounts to castor arms on cutting unit.

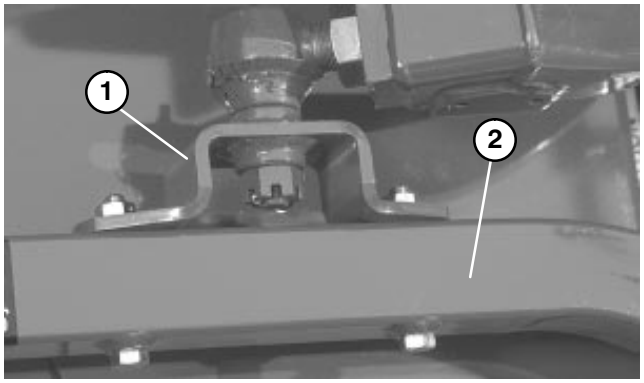

Figure 25
1. Castor Arm
2. Ball Joint Mount

5. Roll cutting unit away from the traction unit separating male and female sections of PTO shaft.

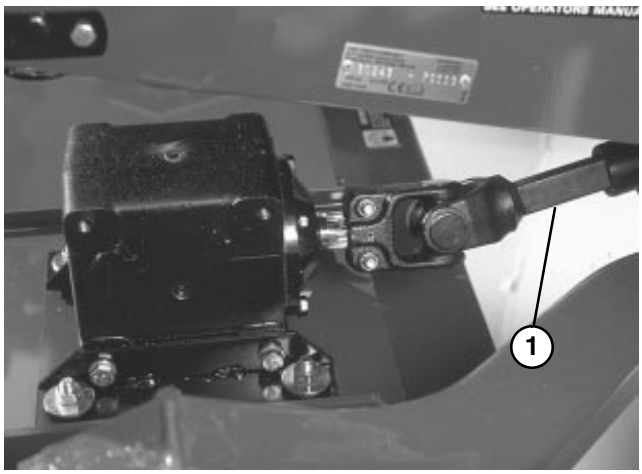

Figure 26
1. PTO Shaft

DANGER

Do not start the engine and engage the PTO lever when PTO shaft is not connected to cutting unit gear box because the PTO shaft will rotate with enough force to cause serious injury.

MOUNTING CUTTING UNIT TO TRACTION UNIT (Fig. 24–26)

1. Position machine on a level surface and shut engine off.

2. Move cutting unit into position in front of traction unit.

3. Slide male PTO shaft into female PTO shaft.

4. Move lift lever to FLOAT position. Push lift arms down until holes in ball joint mounts line up with holes in castor arms.

5. Secure ball joint mounts to castor arms with capscrews and flange nuts.

6. Raise cutting unit and place blocks under it to prevent it from falling during assembly.

7. Connect counterbalance to traction unit brackets with lock pins.

8. Remove the blocks from under the cutting unit. Make final counterbalance adjustments under actual cutting conditions; refer to Tension Spring Adjustment, page 13.

MAINTENANCE

SERVICING CASTOR ARM BUSHINGS (Fig. 27)

The castor arms have bushings pressed into the top and bottom of the tube and after many hours of operation, the bushings will wear. To check the bushings, move castor fork back and forth and from side to side. If castor spindle is loose inside the bushings, bushings are worn and must be replaced.

1. Raise cutting unit so wheels are off floor and block it so it cannot fall accidentally.

2. Remove tensioning cap, spacer(s) and thrust washer from top of castor spindle.

3. Pull castor spindle out of mounting tube. Allow thrust washer and spacer(s) to remain on bottom of spindle.

4. Insert pin punch into top or bottom of mounting tube and drive bushing out of tube. Also drive other bushing out of tube. Clean inside of tubes to remove dirt.

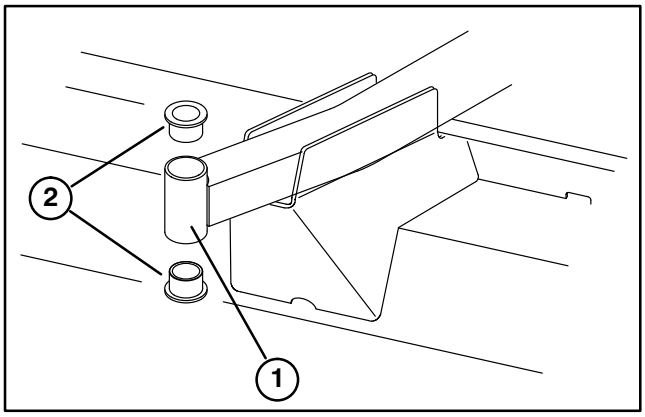

Figure 27
1. Front Castor Arm Tube
2. Bushings

5. Apply grease to inside and outside of new bushings. Using a hammer and flat plate, drive bushings into mounting tube.

6. Inspect castor spindle for wear and replace it if damaged.

7. Push castor spindle through bushings and mounting tube. Slide thrust washer and spacer(s) onto spindle. Install tensioning cap on castor spindle to retain all parts in place.

SERVICING CASTOR WHEELS AND BEARINGS (Fig. 28)

The castor wheel rotates on a high−quality roller bearing and is supported by a spanner bushing. Even after many hours of use, provided that the bearing was kept well−lubricated, bearing wear will be minimal. However, failure to keep bearing lubricated will cause rapid wear. A wobbly castor wheel usually indicates a worn bearing.

1. Remove locknut from capscrew holding castor wheel assembly between castor fork. Grasp castor wheel and slide capscrew out of fork.

2. Pull spanner bushing out of wheel hub.

3. Remove bushing from wheel hub and allow bearing to fall out. Remove bushing from opposite side of wheel hub.

4. Check the bearing, spanner and inside of wheel hub for wear. Replace defective parts.

5. To assemble the castor wheel, push bushing into wheel hub. Slide bearing into wheel hub. Push other bushing into open end of wheel hub to captivate the bearing inside the wheel hub.

6. Carefully slide spanner through the bushings and the wheel hub.

7. Install castor wheel assembly between castor fork and secure in place with capscrew, washers and locknut.

8. Lubricate castor wheel bearing through grease fitting, using No. 2 general purpose lithium base grease.

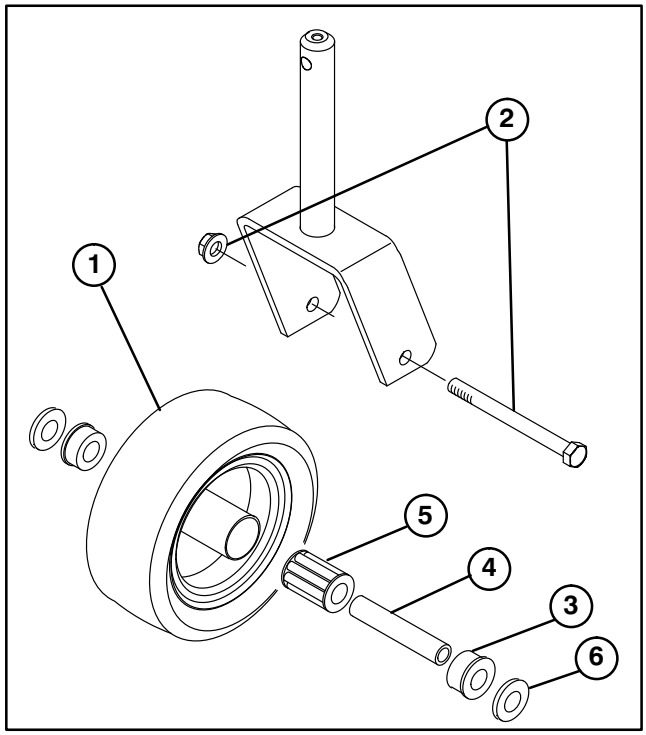

Figure 28
1. Castor wheel
2. Capscrew & Locknut
3. Bushing (2)
4. Spanner Bushing
5. Roller Bearing
6. Washer (2)

MAINTENANCE

CHECKING FOR BENT BLADE (Fig. 29)

1. Position machine on a level surface, raise cutting unit, engage parking brake, be sure traction pedal is in neutral position, PTO lever in OFF position, shut engine OFF, remove key from switch and disconnect wires from spark plugs. Block cutting unit to prevent it from falling accidentally.

2. Rotate blade until the ends face forward and backward. Measure from inside of cutting unit to cutting edge at front of blade (Fig. 29), and remember this dimension.

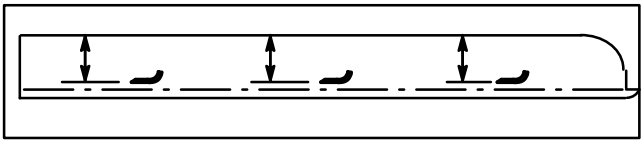

Figure 29

3. Rotate opposite end of blade forward. Measure between the cutting unit and cutting edge of blade at the same position as in step 2. The difference between dimensions obtained in steps 2 and 3 must not exceed 1/8 of an inch. If dimension exceeds 1/8 of an inch, replace the blade because it is bent: refer to Removing Cutter Blade.

REPLACING CUTTER BLADE (Fig. 30)

The blade must be replaced if a solid object is hit, the blade is out−of−balance or if the blade is bent. Always use genuine TORO replacement blades to be sure of safety and optimum performance. Never use replacement blades made by other manufacturers because they could be dangerous.

WARNING

Do not try to straighten a blade that is bent, and never weld a broken or cracked blade. Always use a new blade to assure safety.

1. Position machine on a level surface, raise cutting unit, engage parking brake, be sure traction pedal is in neutral position, PTO lever in OFF position, shut engine OFF, remove key from switch and disconnect wires from spark plugs. Block cutting unit to prevent it from falling accidentally.

2. Grasp end of blade using a rag or thickly padded glove. Remove blade bolt, lockwasher, anti−scalp cup and blade from spindle shaft.

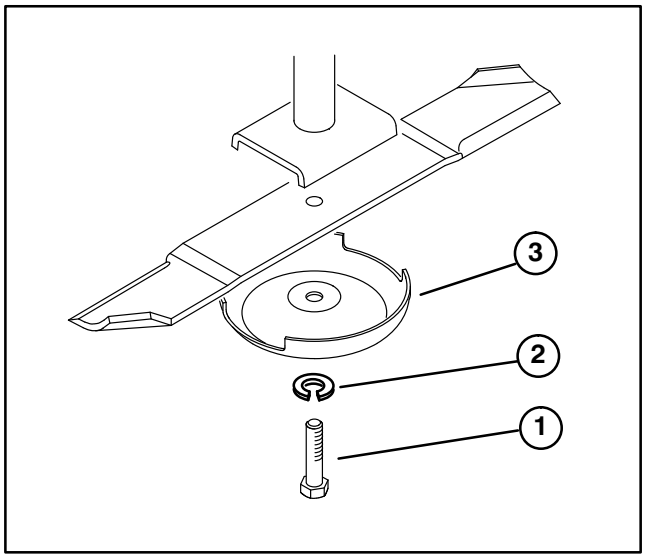

Figure 30

1. Blade bolt
2. Lockwasher
3. Anti−Scalp Cup

3. Install blade−sail facing toward cutting unit− with anti−scalp cup, lockwasher and blade bolt. Tighten blade bolt to 85−110 ft-lb.

CHECKING SAIL AND SHARPENING CUTTER BLADE (Fig. 31−32)

Two areas must be considered when checking and servicing the cutter blade: one area is the sail, the other is the cutting edge. Both cutting edges and the sail, which is the turned up portion opposite the cutting edge, contribute to a good quality−of−cut. The sail is important because it pulls grass up straight, thereby producing an even cut. However, the sail will gradually wear down during operation, and this condition is normal. As the sail wears down, the quality−of−cut will degrade somewhat, although the cutting edges are sharp. The cutting edge of the blade must be sharp so the grass is cut rather than torn. A dull cutting edge is evident when tips of the grass appear brown and shredded. Sharpen the cutting edges to correct this condition.

1. Position machine on a level surface, raise cutting unit, engage parking brake, be sure traction pedal is in neutral position, PTO lever in OFF position, shut engine OFF, remove key from switch and disconnect wires from spark plugs. Block cutting unit to prevent it from falling accidentally.

2. Examine cutting ends of the blade carefully, especially where the flat and curved parts of the blade meet (Fig. 31−A). Since sand and abrasive material can wear away the metal that connects the flat and curved parts of the blade, check the blade before using the mower. If wear is noticed (Fig. 31−B), replace the blade.

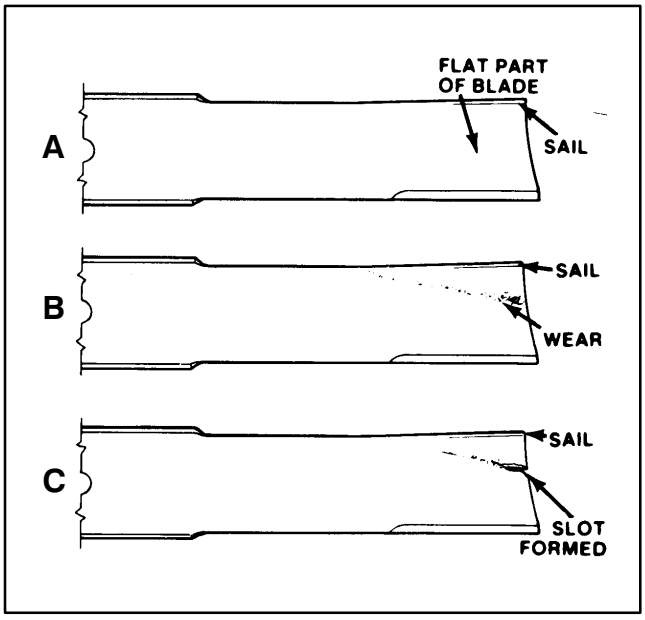

Figure 31

3. Examine cutting edges of all blades. Sharpen the cutting edges if they are dull or nicked. Sharpen only the top of the cutting edge and maintain the original cutting angle to make sure of sharpness (Fig. 32). The blade will remain balanced if same amount of metal is removed from both cutting edges.

DANGER

If blade is allowed to wear, a slot will form between the sail and flat part of the blade (Fig. 31−C). Eventually a piece of the blade may break off and be thrown from under the housing, possibly resulting in serious injury to yourself or bystanders.

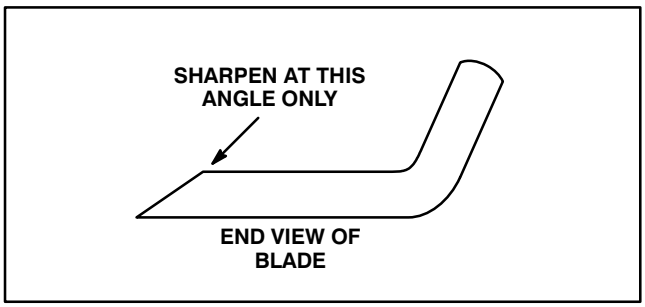

Figure 32

Note: Remove the blades and sharpen them on a grinder: refer to Removing Cutter Blades, steps 2 and 3. After sharpening the cutting edges, reinstall blade with anti−scalp cup, flatwasher and blade bolt. Blade sails must be on top of blade. Tighten blade bolt to 85−110 ft−lb.

CORRECTING CUTTING UNIT MISMATCH

(Fig. 33−34)

If one cutter blade cuts lower than the others, correct as follows:

1. Lower cutting unit onto a level surface, engage parking brake, be sure traction pedal is in neutral position, PTO lever in OFF position, shut engine OFF, remove key from switch and disconnect wires from spark plugs. Make sure tire pressure is equal on all tires.

2. Raise height−of−cut to the 4 in. position: refer to Adjusting Height−Of−Cut.

3. Rotate blades so tips line up with one another. Tips of the adjacent blades must be within 1/8 in. of each other. If tips are not within 1/8 in. of each other, proceed to step 10 and add shims between spindle housing and bottom of cutting unit.

4. Check to make sure front height−of−cut pins are resting properly on frame cushions. If pins are not resting properly, place a shim or shims under cushion to raise it for proper alignment.

5. Position all three blades in the “A” position (Fig. 33) and measure from level surface to the bottom of the tip end of each blade (Fig. 34).

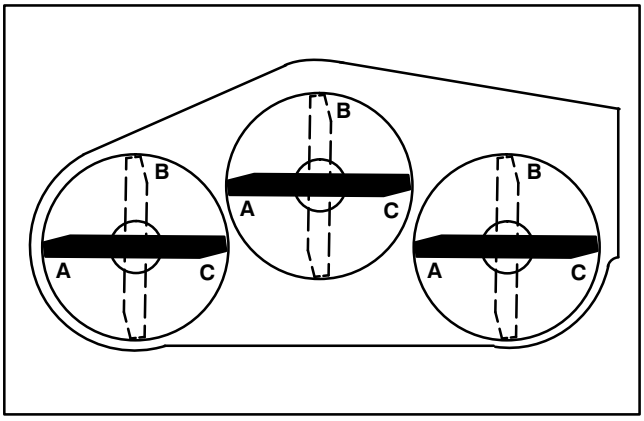

Figure 33

6. Note measurement attained at “A”, rotate blades to “B” position (Fig. 33), measure distance of all blades to level surface and note dimensions (Fig. 34).

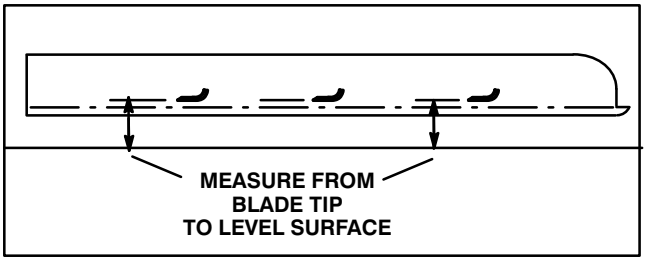

Figure 34

7. Rotate blades to “C” position, measure and note distance measured (Fig. 33, 34).

8. Compare measurements at various positions. All dimensions must be equal within 1/4 in. from any two adjacent blades. The difference between dimensions of all three blades must not exceed 3/8 in. If difference exceeds specifications proceed to step 9.

9. Remove capscrews, flatwashers and locknuts from outer spindle in the area where shims must be added. To raise or lower the blade, add a shim, Part No. 3256−24, between spindle housing and bottom of cutting unit. Continue checking alignment of blades and adding shims until tips of blades are within the required dimension.

REPLACING GRASS DEFLECTOR (Fig. 35)

1. Position machine on a level surface, raise cutting unit, engage parking brake, be sure traction pedal is in neutral position, PTO lever in OFF position, shut engine OFF and remove key from switch. Block cutting unit to prevent it from falling accidentally.

2. Remove two capscrews, locknuts and springs securing deflector mounts to pivot brackets.

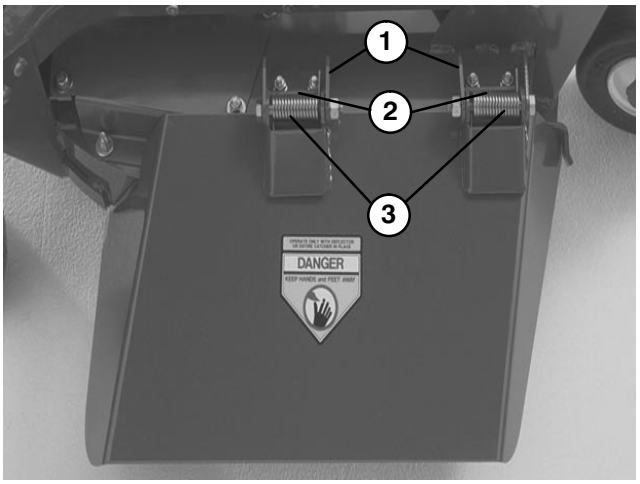

Figure 35
1. **Deflector mounts**
2. **Pivot brackets**
3. **Pivot springs**

3. To remove the pivot brackets, remove carriage bolts and nuts.

4. Reinstall pivot brackets on top of discharge opening with carriage bolts and nuts. Head of carriage bolts must be on inside of cutting unit.

5. Position deflector mounts on pivot brackets and secure parts together with capscrews, locknuts and springs. Both locknuts must face each other. Tighten locknuts until they are flush against deflector pivots.

6. Lift deflector and allow it to drop to check spring tension. Deflector must be held firmly in full downward position by spring tension. Correct if necessary.

ADJUSTING IDLER PULLEY (Fig. 36)

The idler pulley applies force against the belt so power can be transmitted to the blade pulleys. If the idler is not tensioned against the belt with sufficient force, maximum power will not be transmitted to the pulleys. Tension on the belt requires 35 to 40 ft-lb of torque on the large nut, which applies force against the belt If the idler is not adjusted to these specifications, adjustment is necessary.

1. Position machine on a level surface, lower cutting unit, engage parking brake, be sure traction pedal is in neutral position, PTO lever in OFF position, shut engine OFF and remove key from switch.

2. Release and unhook latches securing center cover to top of cutting unit. Remove cover from cutting unit.

3. Loosen two nuts securing idler plate in place. Using a socket and torque wrench, tighten the idler adjusting nut to 35−40 ft−lb. (Fig. 36).

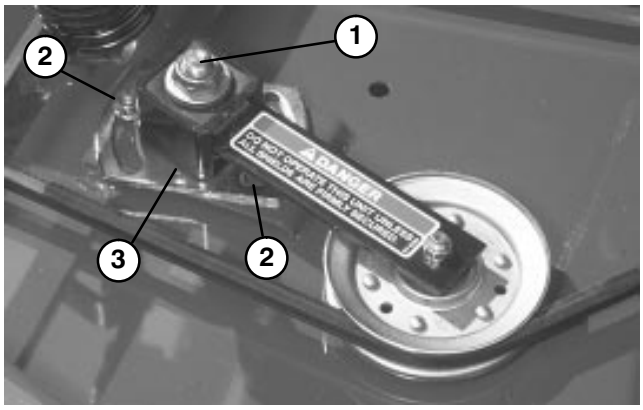

Figure 36
1. **Idler adjusting nut**
2. **Nuts (2)**
3. **Idler plate**

4. Hold the torque against the belt and tighten the two nuts so idler plate is held securely in place. Release the idler adjusting nut. Install cover and secure latches.

ADJUSTING COVER LATCHES

If cutting unit covers fit loose, latch tension may be adjusted by loosening latch mounting screws, and sliding latches (slotted mounting holes in cutting unit) to proper position.

REPLACING DRIVE BELT (Fig. 37)

The blade drive belt, tensioned by the adjustable idler, is very durable. However, after many hours of use, the belt will show signs of wear. Signs of a worn belt are: squealing when belt is rotating, blades slipping when cutting grass, frayed edges, burn marks and cracks. Replace the belt if any of these conditions are evident.

1. Position machine on a level surface, lower cutting unit, engage parking brake, be sure traction pedal is in neutral position, PTO lever in OFF position, shut engine OFF and remove key from switch.

2. Release and unhook latches securing covers to top of cutting unit. Remove covers.

3. Loosen two nuts securing idler plate in place and remove old belt from pulleys.

4. To install new belt, the gear box base must be removed. To do this, remove four carriage bolts and locknuts holding gear box base.

5. Install new belt around gear box pulley, spindle pulleys, stationary idler pulley and adjustable idler pulley.

6. Install gear box base with carriage bolts and locknuts.

7. Using a torque wrench, adjust tension of idler pulley against the belt: refer to Adjusting Idler Pulley.

8. Reinstall covers and secure latches.

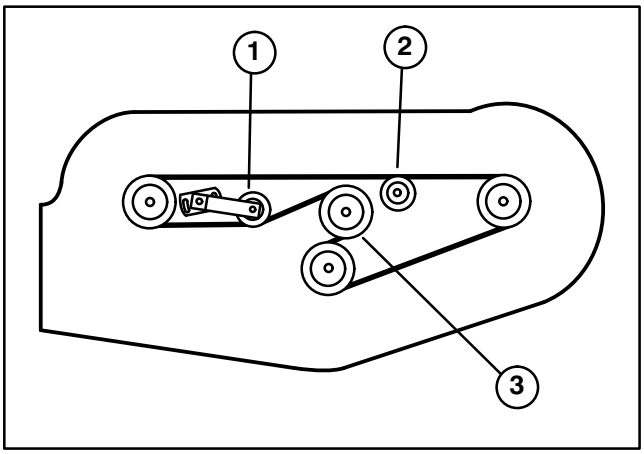

Figure 37

1. **Adjustable Idler Pulley**
2. **Stationary Idler Pulley**
3. **Gear Box Pulley**

IDENTIFICATION AND ORDERING

MODEL AND SERIAL NUMBERS

The cutting deck has two identification numbers: a model number and a serial number. The two numbers are stamped into a plate which is located on carrier frame behind the right front castor wheel. In any correspondence concerning the mower, supply the model and serial numbers to assure that correct information and replacement parts are obtained.

To order replacement parts from an authorized TORO Distributor, supply the following information:

1. Model and serial numbers of the machine.

2. Part number, description and quantity of parts desired.

Note: Do not order by reference number if a parts catalog is being used; use the part number.

NOTES

The Toro Commercial Products Two Year Limited Warranty

The Toro Company warrants your 1996 or newer Toro Commercial Product ("Product") purchased after January 1, 1997, to be free from defects in materials or workmanship for the period of time listed below. Where a warrantable condition exists, Toro will repair the Product at no cost to you including diagnosis, labor, parts, and transportation. This warranty begins on the date the Product is delivered to the original retail purchaser.

Warranty Duration: Two years or 1500 operational hours*, whichever occurs first.
***Product equipped with hour meter**

Owner Responsibilities:

As the Product owner, you are responsible for required maintenance and adjustments stated in your Owner's Manual. Failure to perform required maintenance and adjustments can be grounds for disallowing a warranty claim.

Instructions for Obtaining Warranty Service:

You are responsible for notifying the Commercial Products Distributor or Authorized Commercial Products Dealer from whom you purchased the Product as soon as you believe a warrantable condition exists.

If you need help locating a Commercial Products Distributor or Authorized Dealer, or if you have questions regarding your warranty rights or responsibilities, you may contact us at:

Toro Commercial Products Service Department
8111 Lyndale Avenue South
Minneapolis, MN, 55420–1196
Telephone: (612) 888–8801
Facsimile: (612) 887–8258
E–Mail: Commercial.Service@Toro.Com

Maintenance Parts:

Parts scheduled for replacement as required maintenance ("Maintenance Parts"), are warranted for the period of time up to the scheduled replacement time for that part.

Items/Conditions Not Covered:

Not all product failures or malfunctions that occur during the warranty period are defects in materials or workmanship. The items / conditions listed below are not covered by this warranty:

- Product failures which result from the use of non–Toro replacement parts, or from installation and use of add–on, modified, or unapproved accessories are not covered.
- Product failures which result from failure to perform required maintenance and/or adjustments are not covered.
- Product failures which result from operating the Product in an abusive, negligent or reckless manner are not covered.
- This warranty does not apply to parts subject to consumption through use unless found to be defective. Examples of parts which are consumed, or used up, during normal Product operation include, but are not limited to, blades, reels, bedknives, tines, spark plugs, castor wheels, tires, filters, belts, etc.
- This warranty does not apply to failures caused by outside influence. Items considered to be outside influence include, but are not limited to, weather, storage practices, contamination, use of unapproved coolants, lubricants, additives, or chemicals, etc.
- This warranty does not apply to normal "wear and tear" items. Normal "Wear and Tear" includes, but is not limited to, damage to seats due to wear or abrasion, worn painted surfaces, scratched decals or windows, etc.

Other Legal Disclaimers:

The above remedy of product defects through repair by an authorized distributor or dealer is the purchaser's sole remedy for any defect. This warranty gives you specific legal rights, and you may also have other rights which vary from state to state.

Except for the Emissions warranty referenced below, if applicable, there is no other express warranty. All implied warranties of merchantability and fitness for use are limited to the duration of the express warranty.

Some states do not allow limitations on how long an implied warranty lasts, so the above limitation may not apply to you.

The Toro Company is not liable for indirect, incidental or consequential damages in connection with the use of the Product, including any cost or expense of providing substitute Product or service during periods of malfunction or non–use.

Some states do not allow the exclusion of incidental or consequential damages, so the above exclusion may not apply to you.

Note to California residents: The Emissions Control System on your Product may be covered by a separate warranty meeting requirements established by the U.S. Environmental Protection Agency (EPA), or the California Air Resources Board (CARB). The hour limitations set forth above do not apply to the Emissions Control System Warranty. Refer to the California Emission Control Warranty Statement printed in your Owner's Manual or contained in the engine manufacturer's documentation for details.