FORM NO. 3322–192

TORO®

MODEL NO. 04111

INSTALLATION INSTRUCTIONS

DETHATCHER KIT
FOR GREENSMASTER® 1000

INSTALLATION INSTRUCTIONS

Remove Bedbar

1. Position mower on a flat level work surface. Make sure engine is OFF. Remove high tension lead from the spark plug.

2. Remove bedbar from the mower. Refer to Operator's Manual for removal instructions.

NOTE: Bedbar adjusters may also be removed from mower side plates.

Remove Reel

1. Remove (4) cap screws, (4) lock washers, and reel drive cover from the mower. Mark bearing housing (RH) for reassembly purposes (Fig. 1).

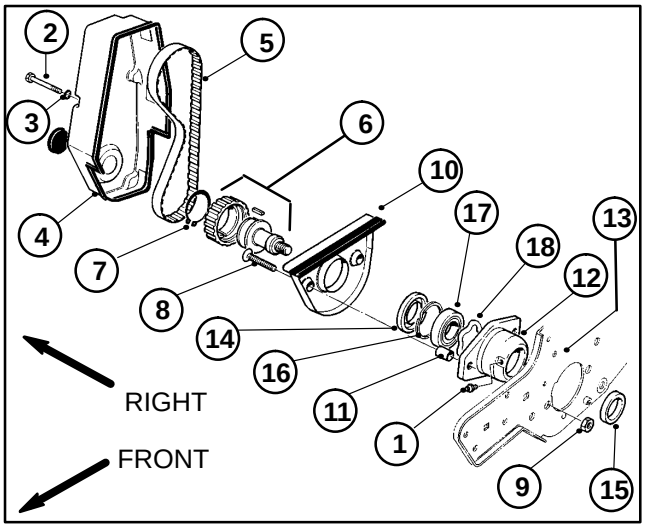

Figure 1

1. **Grease fitting**
2. **Cap screw**
3. **Lock washer**
4. **Reel drive cover**
5. **Reel drive belt**
6. **Pulley and drive assy**
7. **Retaining ring**
8. **Flat head screw**
9. **Nut**
10. **Groomer arm cover**
11. **Cover standoff**
12. **Bearing housing (RH)**
13. **Frame**
14. **Large seal**
15. **Small seal**
16. **Retaining ring**
17. **Bearing**
18. **Wave washer**

2. Remove reel drive belt from the pulley and drive assembly.

IMPORTANT: Do not disassemble the pulley and drive assembly and retaining ring.

3. Use a 1/2–inch drive in the pulley and drive assembly (Fig. 1) to remove the assembly from the reel drive shaft. Also, remove bearing lock nut (Fig. 2) from the reel drive shaft at the same time.

4. Use an allen wrench and remove both flat head screws, groomer arm cover, and both cover standoffs from the bearing housing (Fig. 1).

5. Remove both cap screws, lock nuts, and bearing cover from the bearing housing (LH) (Fig. 2).

6. Remove grease fittings from both bearing housings (Fig. 1 and 2).

7. Pull both bearing housings from the frame and reel (Fig. 1 and 2). Remove the reel from the mower.

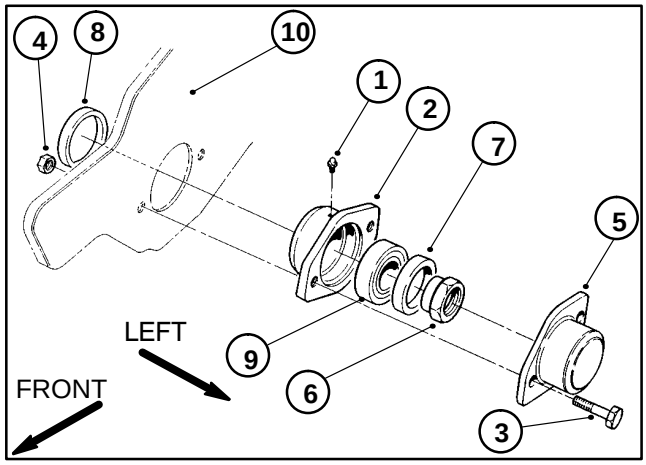

Figure 2

1. **Grease fitting**
2. **Bearing housing (LH)**
3. **Cap screw**
4. **Lock nut**
5. **Bearing cover**
6. **Bearing lock nut**
7. **Large seal**
8. **Small seal**
9. **Bearing**
10. **Frame**

Install New Grass Shield

1. Remove fasteners securing grass shield mounting brackets to mower and remove shield.

2. Loosely mount a shield bracket to each end of new grass shield with a 1/4–20 x 5/8" lg. capscrew, flat washer and lock nut, as shown in figure 3.

3. Mount shield brackets to each side plate of mower with a 5/16–18 x 1–1/4" lg. capscrew, (2) flat washers and a lock nut, as shown in figure 3.

4. Tighten all shield fasteners.

© The TORO Company – 1998

Install Dethatcher Reel

1. Position reel in frame to accept bearing housings. The reel shaft end with internal threads should be on the right side of the frame.

2. Install a spacer−seal onto each end of reel shaft (Fig. 3).

3. Attach bearing housing (RH) through the frame onto the reel shaft (Fig. 1).

A. Push housing onto reel shaft. If necessary, tap into position with a soft hammer.

B. Make sure grease fitting hole is position to the front of the mower.

C. Attach the groomer arm cover to the bearing housing and frame with the two flat head screws, cover standoffs, and lock nuts. Do not tighten down fasteners.

4. Attach bearing housing (LH) through the frame onto the reel shaft (Fig. 2).

A. Push housing onto reel shaft. If necessary, tap into position with a soft hammer.

B. Make sure grease fitting hole is position to the front of the mower.

C. Align housing holes to frame holes with both cap screws and lock nuts. Fasteners should be only finger tight.

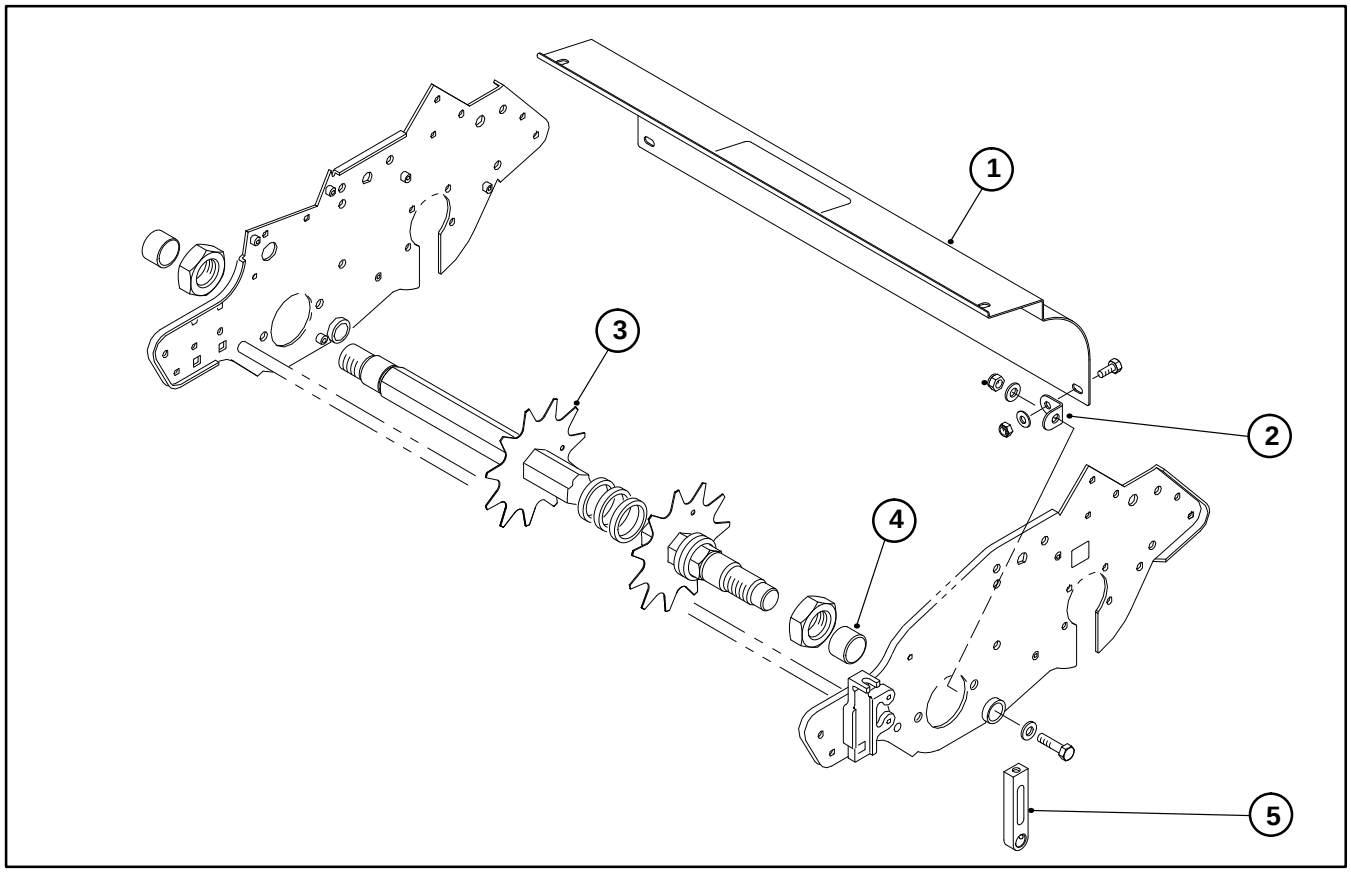

Figure 3

1. **Shield**
2. **Shield bracket**
3. **Dethatcher assembly**
4. **Spacer−seal**
5. **Height−of−cut arm**

5. While tightening the bearing lock nut (Fig. 2) to the reel shaft, tighten pulley and drive assembly (Fig. 1) to the reel shaft at the same time. Torque assembly and nut to 50 ft−lb (6.9 kg−m).

6. Tighten flat head screws and nuts securing the bearing housing (RH) to the frame (Fig. 1).

7. Remove both cap screws and lock nuts holding the bearing housing (LH) to the frame. Position bearing cover to housing and secure to frame with both cap screws and lock nuts (Fig. 2).

8. Reinstall reel drive belt to the pulley and drive assembly.

9. Reinstall reel drive cover with four lock washers and cap screws to the mower. Tighten cap screws (Fig. 1).

10. Reinstall grease fittings to both bearing housings. Lubricate both housings with No. 2 multipurpose lithium base grease (Fig. 2 and 1).

Install New Height−of−Cut Arms

(Model 04052 Only)

Note: To achieve greater depth when dethatching, new longer height−of−cut arms must be installed.

1. Remove locknuts securing height-of-cut arms to height-of-cut brackets (Fig. 4).

2. Remove height-of-cut arms from roller.

3. Remove adjusting screw from height−of−cut arm (Fig. 4).

4. Reverse procedure to install new height-of-cut arms.

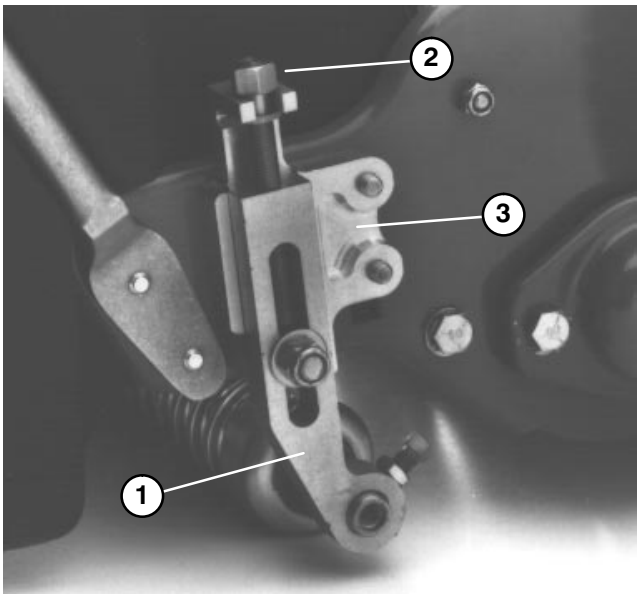

Figure 4

1. **Height−of−cut arm**
2. **Adjusting screw**
3. **Height−of−cut bracket**

OPERATION

TRAINING PERIOD

Before operating the dethatcher unit on a green, evaluate the performance of the dethatcher at the desired setting. Operate in a clear, unused area to determine if the desired results will be achieved. Adjust the dethatcher if a change is desired.

OPERATING TIPS

1. Operate the mower at full throttle varying ground speed to meet dethatching loads.

2. Maximum negative setting on the dethatcher blades is 5/8” deep penetration.

3. Power requirements to operate the dethatcher will vary with turf and soil conditions. Speed may need to be reduced in some conditions.

MAINTENANCE

REMOVING BLADES FROM SHAFT

1. Remove one of the 1−1/8 in. nuts from shaft.

2. Disassemble spacers and dethatching blades from shaft.

IMPORTANT: When disassembling blades from hex shaft, pay close attention to the position of the index holes in the blades. This is very important for the re−assembly of the blades.

CAUTION

Use caution when removing blades from shaft as they are extremely sharp and may have burrs that will cut your hands.

3. After blades and spacers are removed, clean and lubricate hex shaft with a light coating of grease to simplify assembly.

IMPORTANT: The two 1/4" spacers must be assembled on each end of shaft. Do not invert individual dethatching reel blades. The order of disassembly is extremely important. Do not invert dethatching reel blades when disassembling or reverse the order when assembling. Note the thatcher blades index hole. The index hole is provided for assembly in order to obtain the PROPER HELIX FOR THE DETHATCHING REEL.

INSTALLING DETHATCHER BLADES (Fig. 5)

Use the following procedure to assure the proper helix is attained when installing the dethatcher blades.

1. First, assemble (2) 1/4 in. spacer on reel shaft, then assemble a reel dethatcher blade.

2. Next, assemble the 1/4 in. spacers.

3. Do not invert individual dethatcher reel blades when reassembling on reel shaft. If the blades are inverted, the blades that are in use, (rounded) will be mixed with the sharp ends of the blades which were not in use. This will cause unsatisfactory performance of the dethatcher unit. Attention should always be taken when disassembling dethatching blades from reel.

4. Install the next blade counter−clockwise so the index reference hole is not aligned with the first blade hole by one hex of the shaft (Fig. 5). Continue to install spacers and blades in this manner until the full complement of blades have been installed. When properly assembled, the blades will be staggered in such a manner to give a helix appearance.

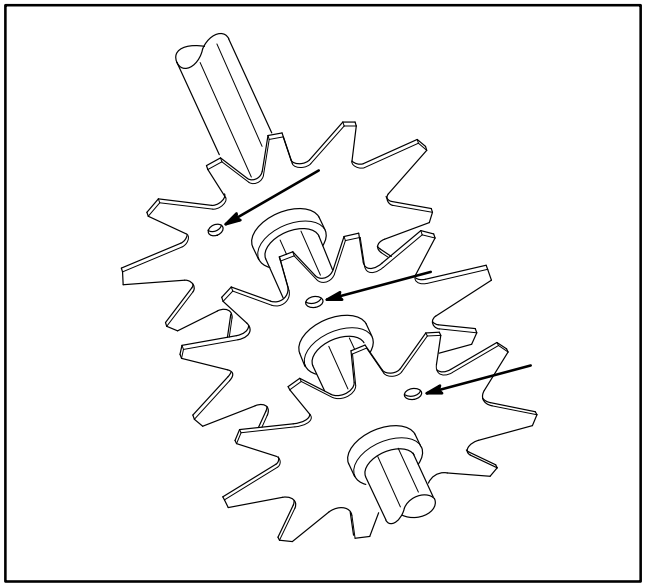

Figure 5

5. After assembly of the spacers and blades, apply Blue Loctite #242 to the 1−1/8 in. nut and tighten to 80 −100 ft−lb.

6. Check positive or negative reel setting and readjust, if necessary.

REVERSING DULL BLADES

When dethatcher blades become dull, grinding is not required. The dethatcher blades can be disassembled from the reel, reversed 180° and reassembled.

Grinding of the blades is only required when both sides of the reel have become dull or rounded.

Reassemble dethatcher blades by inverting all of them 180° and reassembling them onto the hex shaft. This will be evident by all the sharp edges of the blades in the direction of rotation.

Check positive or negative reel setting and readjust, if necessary.

IMPORTANT: Make sure the sharp edge of the blades are in the direction of the rotation of the dethatching unit.